APPENDIX G

Construction, Mitigation, and Reclamation Plan

-This page intentionally left blank-

KEYSTONE XL PROJECT

CONSTRUCTION, MITIGATION, AND RECLAMATION PLAN

April 2012
Rev. 4

-This page intentionally left blank-

1.0 INTRODUCTION

2.0 GENERAL CONDITIONS
- 2.1 Training
- 2.2 Environmental Inspection
- 2.3 Advance Notice of Access to Property Prior to Construction
- 2.4 Other Notifications
- 2.5 Damages to Private Property
- 2.6 Appearance of Worksite
- 2.7 Access
- 2.8 Aboveground Facilities
- 2.9 Minimum Depth of Cover
- 2.10 Non-Hazardous Waste Disposal
- 2.11 Hazardous Wastes
- 2.12 Noise Control
- 2.13 Weed Control
- 2.14 Dust Control
- 2.15 Off Road Vehicle Control
- 2.16 Fire Prevention and Control
- 2.17 Road and Railroad Crossings
- 2.18 Adverse Weather
- 2.19 Cultural Resources

3.0 SPILL PREVENTION AND CONTAINMENT
- 3.1 Spill Prevention
  - 3.1.1 Staging Area
  - 3.1.2 Construction Right of Way
- 3.2 Contingency Plans
- 3.3 Equipment
- 3.4 Emergency Notification
- 3.5 Spill Containment and Countermeasures

4.0 UPLANDS (AGRICULTURAL, FOREST, PASTURE, RANGE AND GRASS LANDS)
- 4.1 Interference with Irrigation Systems
- 4.2 Clearing
- 4.3 Topsoil Removal and Storage
- 4.4 Grading
- 4.5 Temporary Erosion and Sediment Control
  - 4.5.1 General
  - 4.5.2 Sediment Barriers
  - 4.5.3 Trench Plugs
  - 4.5.4 Temporary Slope Breakers (Water Bars)
  - 4.5.5 Drainage Channels or Ditches
  - 4.5.6 Temporary Mulching
  - 4.5.7 Tackifier
- 4.6 Stringing

4.7 Trenching
4.7.1 Trench Dewater/Well Points
4.8 Welding, Field Joint Coating, and Lowering In
4.9 Padding and Backfilling
4.10 Clean Up
4.11 Reclamation and Revegetation
4.11.1 Relieving Compaction
4.11.2 Rock Removal
4.11.3 Soil Additives
4.11.4 Seeding
4.11.5 Permanent Erosion and Sediment Control
4.11.6 Fences
4.11.7 Farm Terraces
4.11.8 Right-of-Way and Pipeline Markers
4.12 Pasture and Range Lands
4.13 Forested Lands
4.14 Residential and Commercial/Industrial Areas
4.14.1 Residential and Commercial Areas
4.14.2 Site – Specific Plans
4.14.3 Landowner Complaint Resolution Procedure
4.15 Fragile Soil Clean Up and Reclamation/Revegetation
4.15.1 General
4.15.2 Right-of-Way Construction
4.15.3 Right-of-Way Reclamation
4.15.4 Post - Construction
4.16 Operations and Maintenance

5.0 DRAIN TILE SYSTEMS
5.1 General
5.2 Identification and Classification of Drain Tile Systems
5.2.1 Publicly Owned Drain Tiles
5.2.2 Privately Owned Drain Tiles
5.3 Mitigation of Damage to Drain Tile Systems
5.3.1 Non-interference with Drain Tile
5.3.2 Non-disturbance of Drain Tile Mains
5.3.3 Relocation or Replacement of Existing Drain Tiles Prior to Construction
5.3.4 Future Drain Tiles/Systems
5.3.5 Other Mitigation Measures
5.4 Responsibility for Repair of Drain Tile Systems
5.4.1 Local Drain Tile Contractor Repair
5.4.2 Pipeline Contractor Repair
5.4.3 Landowner/Tenant Repair
5.5 Drain Tile Repairs
5.5.1 Temporary Repairs During Construction
5.5.2 Permanent Repairs
5.6 Inspection/Acceptance of Drain Tile Repairs

6.0 WETLAND CROSSINGS
- 6.1 General
- 6.2 Easement and Workspace
- 6.3 Vehicle Access and Equipment Crossing
- 6.4 Temporary Erosion and Sediment Control
- 6.5 Wetland Crossing Procedures
  - 6.5.1 Dry Wetland Crossing Method
  - 6.5.2 Standard Wetland Crossing Method
  - 6.5.3 Flooded Push/Pull Wetland Crossing Method
- 6.6 Restoration and Reclamation

7.0 WATERBODIES AND RIPARIAN LANDS
- 7.1 General
- 7.2 Easement and Workspace
- 7.3 Vehicle Access and Equipment Crossings
- 7.4 Waterbody Crossing Methods
  - 7.4.1 Non-flowing Open Cut Crossing Method
  - 7.4.2 Flowing Open Cut Crossing Method of Minor, Intermediate, and Major Waterbodies
  - 7.4.3 Flowing Stream Crossing – Dry Flume Method
  - 7.4.4 Flowing Stream Crossing – Dry Dam and Pump Method
  - 7.4.5 Horizontal Directional Drill Crossings
  - 7.4.6 Horizontal Bore Crossings
- 7.5 Clearing
- 7.6 Grading
- 7.7 Temporary Erosion and Sediment Control
- 7.8 Trenching
- 7.9 Pipe Installation
- 7.10 Backfilling
- 7.11 Stabilization and Restoration of Stream Banks and Slopes

8.0 HYDROSTATIC TESTING
- 8.1 Testing Equipment Location
- 8.2 Test Water Source and Discharge Locations
- 8.3 Filling the Pipeline
- 8.4 Dewatering the Pipeline
  - 8.4.1 Splash Pup
  - 8.4.2 Splash Plate
  - 8.4.3 Plastic Liner
  - 8.4.4 Straw Bale Dewatering Structure

9.0 DRAWINGS AND FIGURES

Detail 1	Typical Silt Fence Barrier
Detail 2	Typical Straw or Hay Bale Barrier
Detail 3	Temporary/Permanent Slope Breaker Detail (Water Bars)
Detail 4	Erosion Control Matting Installation
Detail 5	Typical Dewatering Filter Bag
Detail 6	Typical Straw Bale Dewatering Structure
Detail 7	Typical Permanent Trench Breaker
Detail 8	”Dry” Wetland Crossing Method
Detail 9	Standard Wetland Crossing Method
Detail 10	Push/Pull Wetland Crossing Method
Detail 11	Typical Open Cut Wet Crossing Method Non-Flowing Waterbody
Detail 12	Typical Open Cut Wet Crossing Method Flowing Waterbody
Detail 13	Typical Dry Flume Crossing Method
Detail 13a	Typical Dry Flume Crossing Method (Procedures)
Detail 14	Typical Dam and Pump Crossing
Detail 14a	Typical Dam and Pump Crossing (Procedures)
Detail 15	Typical Horizontal Drill (HDD) Site Plan & Profile
Detail 16	Typical Temporary Bridge Crossing
Detail 17	Typical Flume Bridge Crossing
Detail 18	Typical Railcar Bridge Crossing
Detail 19	Flexible Channel Liner Installation
Detail 20	Typical Rock Rip-Rap
Detail 21	Typical Uncased/Railroad Crossing Bore Detail
Deail 22	(Omitted)
Detail 23	Streambank Reclamation – Log Wall
Detail 24	Streambank Reclamation – Vegetated Geotextile Installation
Detail 25	Typical ROW Layout/Soil Handling 110’ Construction ROW 50’ Easement Drain Tile Crossing
Detail 26	Header/Main Crossovers of Pipeline
Detail 27	Relocate/Replace Drainage Header/Main
Detail 28	Drainage and Irrigation Temporary Drain Tile Repair
Detail 29	Drainage and Irrigation Permanent Drain Tile Repair
Detail 30	Equipment Cleaning Station Detail
Detail 31	Equipment Wash Station Detail
Detail 67/67A	Topsoil Conservation—Triple Ditch

1.0 INTRODUCTION

The construction, mitigation, and reclamation requirements described in this Plan apply to work on all of TransCanada Keystone Pipeline, L.P.'s (Keystone's) Keystone XL Project (Project) lands, including the following;

- uplands, including agricultural (cultivated or capable of being cultivated) lands, pasture lands; range lands; grass lands; forested lands; lands in residential, commercial, or industrial areas; lands in public rights of way; and lands in private rights-of-way;
- wetlands; and
- waterbodies and riparian areas.

Keystone, during the construction, operation, and maintenance of the Project, shall implement the construction, mitigation, and reclamation actions contained in this Plan to the extent that they do not conflict with the requirements of any applicable federal, state, or local rules and regulations, or other permits or approvals that are applicable to the Project. Additionally, Keystone may deviate from specific requirements of this Plan on specific private lands as agreed to by landowners or as required to suit actual site conditions as determined and directed by Keystone. All work must be in compliance with federal, state, and local permits.

The Project will be designed, constructed, operated and maintained in a manner that meets or exceeds applicable industry standards and regulatory requirements. Keystone's Integrity Management Plan and Emergency Response Plan outlines the preventative maintenance, inspection, line patrol, leak detection systems, SCADA, and other pipeline integrity management procedures to be implemented during operation of the Project.

2.0 GENERAL CONDITIONS

2.1 Training

Experienced, well-trained personnel are essential for the successful implementation of this Plan. Keystone and its Contractors shall undergo prevention and response, as well as safety training. The program shall be designed to improve awareness of safety requirements, pollution control laws and procedures, and proper operation and maintenance of equipment.

The construction contractor (Contractor), and all of his subcontractors shall ensure that persons engaged in Project construction are informed of the construction issues and concerns and that they attend and receive training regarding these requirements as well as all laws, rules and regulations applicable to the work. Prior to construction, all Project personnel will be trained on environmental permit requirements and environmental specifications, including fuel handling and storage, cultural resource protection methods, stream and wetland crossing requirements, and sensitive species protection measures.

Different levels of training shall be required for different groups of Contractor personnel. Contractor supervisors, managers, field foremen, and other Contractor personnel designated by Keystone shall attend a comprehensive environmental training session. All other Contractor personnel shall attend a training session before the beginning of construction and during construction as environmental issues and incidents warrant. Additional training sessions shall be held for newly assigned personnel prior to commencing work on the Project.

All Contractor personnel shall attend the training session prior to entering the construction right-of-way. All Contractor personnel shall sign an acknowledgement of having attended the appropriate level of training and shall display a hard hat sticker that signifies attendance at environmental training. In order to ensure successful compliance, Contractor personnel shall attend repeat or supplemental training if compliance is not satisfactory or as new, significant new issues arise.

All visitors and any other personnel without specific work assignments shall be required to attend a safety and environmental awareness orientation.

2.2 Environmental Inspection

Keystone will use Environmental Inspectors on each construction spread. The Environmental Inspectors will review the Project activities daily for compliance with state, federal and local regulatory requirements. The Environmental Inspectors will have the authority to stop specific tasks as approved by the Chief Inspector. They can also order corrective action in the event that construction activities violate the provisions of this Plan, landowner requirements, or any applicable permit requirements.

2.3 Advance Notice of Access to Property Prior to Construction

Prior to initially accessing landowners' property, Keystone shall provide the landowner or tenant with a minimum of 24 hours prior notice unless otherwise negotiated with the landowner and as described in the Project line list). Additionally, the landowner or tenant shall be provided with Keystone contact information. Landowners may utilize contact information to inform Keystone of any concerns related to construction.

Prior notice shall consist of a personal contact, a telephone contact, or delivery of written notice to the landowner to inform the landowner of whereby the landowner or tenant is informed of Keystone's intent to initially access the land. The landowner or tenant need not acknowledge receipt of written notice before Keystone can enter the landowner's property.

Keystone will coordinate with managers of public lands to reduce conflicts between construction activities and recreational uses. Keystone will consult with land managers on state and federal lands regarding any necessary construction and maintenance restrictions consistent with management and use of such lands. Damages from disruption of recreational uses of private lands will be the subject of compensation negotiations with individual landowners.

If pipeline activities occur during the winter season Keystone will consult with the appropriate regulatory agencies to establish the appropriate protective measures to avoid or mitigate wildlife seasonal, timing or migration concerns.

2.4 Other Notifications

The Contractor shall notify, in writing, both Keystone and the authority having jurisdiction over any road, railroad, canal, drainage ditch, river, foreign pipeline, or other utility to be crossed by the pipeline at least 48 hours (excluding Saturdays, Sundays, and statutory holidays), or as specified on the applicable permit(s), prior to commencement of pipeline construction, in order that the said authority may appoint an inspector to ensure that the crossing is constructed in a satisfactory manner.

The Contractor shall notify Keystone immediately of any spill of a potentially hazardous substance that creates a sheen on a wetland or waterbody, as well as any existing soil contamination discovered during construction.

The Contractor shall immediately notify Keystone of the discovery of previously unreported historic property, other significant cultural materials, or suspected human remains uncovered during pipeline construction.

The Contractor shall immediately notify Keystone of a Project-related injury to or mortality of a threatened or endangered animal.

2.5 Damages to Private Property

Pipeline construction activities shall be confined to the construction right-of-way, temporary work space, additional temporary work space, and approved access routes.

Keystone shall reasonably compensate landowners for any construction-related damages caused by Keystone which occur on or off of the established pipeline construction right-of-way.

Keystone shall reasonably compensate landowners for damages to private property caused by Keystone beyond the initial construction and reclamation of the pipeline, to include those damages caused by Keystone during future construction, operation, maintenance, and repairs relating to the pipeline.

2.6 Appearance of Worksite

The construction right-of-way shall be maintained in a clean, neat condition at all times. At no time shall litter be allowed to accumulate at any location on the construction right-of-way. The Contractor shall provide a daily garbage detail with each major construction crew to keep the construction right-of-way clear of trash, pipe banding and spacers, waste from coating products, welding rods, timber skids, defective materials and all construction and other debris immediately behind construction operations unless otherwise approved by Keystone. Paper from wrapping or coating products or lightweight items shall not be permitted to be scattered by the wind.

The traveled surfaces of roads, streets, highways, etc. (and railroads when applicable) shall be cleaned free of mud, dirt, or any debris deposited by equipment traversing these roads or exiting from the construction right-of-way.

2.7 Access

Prior to the pipeline's installation, Keystone and the landowner shall reach a mutually acceptable agreement on the route that shall be utilized by the Contractor for entering and exiting the pipeline construction right-of-way should access to the construction right-of-way not be practicable or feasible from adjacent segments of the pipeline construction right-of-way, public road, or railroad right-of-way.

All construction vehicles and equipment traffic shall be confined to the public roads, private roads acquired for use by Keystone, and the construction right-of-way. If temporary private access roads are constructed, they shall be designed to maintain proper drainage and shall be built to minimize soil erosion.

Sufficiently sized gaps shall be left in all spoil and topsoil wind rows and a hard or soft plug shall be left in the trench at all temporary private access roads and obvious livestock or wildlife trails unless the landowner agrees prior to construction that these access points can be blocked during construction.

All construction-related private roads and access points to the right-of-way shall be marked with signs. Any private roads not to be utilized during construction shall also be marked.

2.8 Aboveground Facilities

Locations for aboveground facilities shall be selected in a manner so as to be as unobtrusive as reasonably possible to ongoing agricultural or other landowner activities occurring on the lands adjacent to the facilities. If it is not feasible, to avoid interference, such activities shall be located so as to incur the least hindrance to the adjacent agricultural operations (i.e., located in field corners or areas where at least one side is not used for cropping purposes) provided the location is consistent with the design constraints of the pipeline. Aboveground facilities shall avoid floodplains and wetlands to the maximum extent possible. Additionally, they shall be located to avoid existing drain tile systems to the extent possible. To further reduce visual impacts from aboveground pipeline facilities and structures, Keystone will comply with standard industry painting practices with respect to aboveground facilities. Keystone will address any visual aesthetics issues with landowners in individual consultations.

2.9 Minimum Depth of Cover

The pipeline shall be installed so that the top of the pipe and coating is a minimum depth of 5 feet below the bottom of waterbodies including rivers, creeks, streams, ditches, and drains. This depth shall normally be maintained

over a distance of 15 feet on each side of the waterbody measured from the top of the defined stream channel. If concrete weights or concrete coated pipe is utilized for negative buoyancy of the pipeline, the minimum depth of cover shall be measured from the top of the concrete to the original ground contour. The following table indicates standard depths that would apply to pipeline construction.

Location	Normal Excavation (inches)	For Rock Excavation (inches
Most areas	48	36
All waterbodies	60	36
Dry creeks, ditches, drains, washes, gullies, etc.	60	36
Drainage ditches at public roads and railroads	60	48

Depth of cover requirements may be modified by Keystone based on site-specific conditions. However, all depths shall be in compliance with all established codes.

2.10 Non-Hazardous Waste Disposal

Non-hazardous pipeline construction wastes include human waste, trash, pipe banding and spacers, waste from coating products, welding rods, timber skids, cleared vegetation, stumps, and rock.

All waste which contains (or at any time contained) oil, grease, solvents, or other petroleum products falls within the scope of the oil and hazardous substances control, cleanup, and disposal procedures. This material shall be segregated for handling and disposal as hazardous wastes.

The Contractor shall be responsible for ensuring that human wastes are handled and disposed of exclusively by means of portable, self-contained toilets during all construction operations. Wastes from these units shall be collected by a licensed contractor for disposal only at licensed and approved facilities.

The Contractor shall remove all trash from the construction right-of-way on a daily basis unless otherwise approved or directed by Keystone.

The Contractor shall dispose of HDD drill cuttings and drilling mud at a Keystone-approved location. Disposal options may include spreading over the construction right-of-way in an upland location approved by Keystone, or hauling to an approved licensed landfill or other site approved by Keystone.

The Contractor shall remove all extraneous vegetative, rock, and other natural debris from the construction right-of-way by the completion of cleanup

The Contractor shall remove all trash and wastes from Contractor yards, and Pipe Stockpipe Sites, and staging areas when work is completed at each location.

The Contractor shall dispose of all waste materials at licensed waste disposal facilities. Wastes shall not be disposed of in any other fashion such as un-permitted burying or burning.

2.11 Hazardous Wastes

The Contractor shall ensure that all hazardous and potentially hazardous materials are transported, stored, and handled in accordance with all applicable legislation. Workers exposed to or required to handle dangerous materials shall be trained in accordance with the applicable regulator and the manufacturer's recommendations.

The Contractor shall dispose of all hazardous materials at licensed waste disposal facilities. Hazardous wastes shall not be disposed of in any other fashion such as un-permitted burying or burning.

All transporters of oil, hazardous substances, and hazardous wastes shall be licensed and certified according to the applicable state vehicle code. Incidents on public highways shall be reported to the appropriate agencies.

All hazardous wastes being transported off-site shall be manifested. The manifest shall conform to requirements of the appropriate state agency. The transporter shall be licensed and certified to handle hazardous wastes on the public highways. The vehicles as well as the drivers must conform to all applicable vehicle codes for transporting hazardous wastes. The manifest shall conform to 49 CFR Parts 172.101, 172.202, and 172.203.

If toxic or hazardous waste materials or containers are encountered during construction, the Contractor shall stop work immediately to prevent disturbing or further disturbing the waste material and shall immediately notify Keystone. The Contractor shall not restart work until clearance is granted by Keystone.

2.12 Noise Control

The Contractor shall minimize noise during non-daylight hours and within 1 mile of residences or other noise-sensitive areas such as hospitals, motels or campgrounds. Keystone shall abide by all applicable noise regulations regarding noise near residential and commercial/industrial areas. The Contractor shall provide notice to Keystone if noise levels are expected to exceed bylaws for a short duration. Keystone will give advanced notice to landowners within 500 feet of right-of-way prior to construction, limit the hours during which construction activities with high-decibel noise levels are conducted, coordinate work schedules, and ensure that construction proceeds quickly through such areas. The Contractor shall minimize noise in the immediate vicinity of herds of livestock or poultry operations, which are particularly sensitive to noise.

Keystone will set up a toll-free telephone line for landowners to report any construction noise-related issues.

2.13 Weed Control

Keystone will prepare a weed management plan for each state crossed by the project, as required. In general, these plans will consider the following measures listed below.

Prior to mobilization for the Project, the Contractor shall thoroughly clean all construction equipment, including timber mats, prior to moving the equipment to the job site to limit the potential for the spread of noxious weeds, insects and soil-borne pests. The Contractor shall clean the equipment with high-pressure washing equipment.

Prior to construction, Keystone will mark all areas of the right-of-way which contain infestations of noxious, invasive species or soil-borne pests. Such marking will clearly indicate the limits of the infestation along the right-of-way. During construction, the Contractor shall clean the tracks, tires, and blades of equipment by hand (track shovel) or compressed air to remove excess soil prior to movement of equipment out of weed or soil-borne pest infested areas, or utilize cleaning stations to remove vegetative materials using water under high pressure (see detail Drawings 30 and 31).

In areas of isolated weed populations, the Contractor shall strip topsoil from the full width of the construction right-of-way and store the topsoil separately from other topsoil and subsoil. The Environmental Inspectors will identify these locations in the field prior to grading activities.

The Contractor shall use mulch and straw or hay bales that are free of noxious weeds for temporary erosion and sediment control.

The Contractor shall implement pre-construction treatments such as mowing prior to seed development or herbicide application to areas of noxious weed infestation prior to other clearing, grading, trenching, or other soil disturbing work at locations identified in the construction drawings.

Keystone will implement Best Management Practices (BMPs) for conducting vegetation control where necessary before and after construction. Typical agricultural herbicides, developed in consultation with county or state regulatory agencies, will be used. Herbicide types will be determined based on the weed species requiring control. The Contractor shall apply herbicides, where required, within one week, or as deemed necessary for optimum mortality success, prior to disturbing the area by clearing, grading, trenching, or other soil disturbing work. Herbicides shall be applied by applicators appropriately licensed or certified by the state in which the work is conducted. All herbicides applied prior to construction shall be non-residual or shall have a significant residual effect no longer than 30 days. Herbicides applied during construction shall be non-residual. Keystone will implement BMPs in the use of pesticides and herbicides along the pipeline corridor to reduce potential impacts to avian and wildlife species.

The Contractor shall not use herbicides in or within 100 feet of a wetland or waterbody.

After pipeline construction, on any construction right-of-way over which Keystone will retain control over the surface use of the land after construction (i.e., valve sites, metering stations, pump stations, etc.), Keystone shall provide for weed control to limit the potential for the spread of weeds onto adjacent lands used for agricultural purposes. Any weed control spraying performed by Keystone shall be done by a state-licensed pesticide applicator.

Keystone shall be responsible for reimbursing all reasonable costs incurred by owners of land adjacent to aboveground facilities when the landowners must control weeds on their land which can be reasonably determined to have spread from land occupied by Keystone's aboveground facilities.

2.14 Dust Control

The Contractor shall at all-time control airborne dust levels during construction activities to levels acceptable to Keystone. The Contractor shall employ water trucks, sprinklers or calcium chloride as necessary to reduce dust to acceptable levels. Utilization of calcium chloride is limited to roads.

Dust shall be strictly controlled where the work approaches dwellings, farm buildings, and other areas occupied by people and when the pipeline parallels an existing road or highway. This shall also apply to access roads where dust raised by construction vehicles may irritate or inconvenience local residents. The speed of all Contractor vehicles shall be controlled in these areas. Emissions from construction equipment combustion, open burning, and temporary fuel transfer systems and associated tanks will be controlled to the extent required by state and local agencies through the permit process.

The Contractor shall take appropriate precautions to prevent fugitive emissions caused by sand blasting from reaching any residence or public building. The Contractor shall place curtains of suitable material, as necessary, to prevent wind-blown particles from sand blasting operations from reaching any residence or public building.

Additional measures may be required by state regulations or local ordinances. The Contractor will comply with all applicable state regulations and local ordinances with respect to truck transportation and fugitive dust emissions.

2.15 Off Road Vehicle Control

Keystone shall offer to landowners or managers of forested lands to install and maintain measures to control unauthorized vehicle access to the construction right-of-way where appropriate. These measures may include the following unless otherwise approved or directed by Keystone based on site specific conditions or circumstances:

- signs;
- fences with locking gates;
- slash and timber barriers, pipe barriers, or boulders lined across the

construction right-of-way; and

- conifers or other appropriate trees or shrubs across the construction right-of-way.

2.16 Fire Prevention and Control

The Contractor shall comply with all federal, state, county and local fire regulations pertaining to burning permits and the prevention of uncontrolled fires. The following mitigative measures shall be implemented to prevent fire hazards and control of fires:

- A list of relevant fire authorities and their designated representative to contact shall be maintained on site by construction personnel.
- Adequate firefighting equipment shall be available on site in accordance with the applicable regulatory requirements shall be available on site.
- The level of forest fire hazard shall be posted at the construction office (where visible for workers) and workers shall be made aware of the hazard level and related implications.
- The Contractor shall provide equipment to handle any possible fire emergency. This shall include, although not be limited to, water trucks; portable water pumps; chemical fire extinguishers; hand tools such as shovels, axes, and chain saws; and heavy equipment adequate for the construction of fire breaks when needed.
- Specifically, the Contractor shall supply and maintain in working order an adequate supply of fire extinguishers for each crew engaged in potentially combustible work such as welding, cutting, grinding, and burning of brush or vegetative debris.
- In the event of a fire, the Contractor shall immediately use resources necessary to contain the fire. The Contractor shall then notify local emergency response personnel.
- All tree clearing activities are to be carried out in accordance with local rules and regulations for the prevention of forest fires.
- Burning shall be done in compliance with state, county, or local applicable regulations.
- Any burning will be done within the right-of-way. Only small piles shall be burned to avoid overheating or damage to trees or other structures along the right-of-way.
- Flammable wastes shall be removed from the construction site on a regular basis.
- Flammable materials kept on the construction site must be stored in approved containers away from ignition sources.
- Smoking shall be prohibited around flammable materials.
- Smoking shall be prohibited on the entire construction site when the fire hazard is high.

2.17 Road and Railroad Crossings

Construction across paved roads, highways, and railroads will be in accordance with the requirements of the road and railroad crossing permits and approvals obtained by Keystone. In general, all major paved roads, all primary gravel roads, highways, and railroads will be crossed by boring beneath the road or railroad. Detail drawing 21 illustrates a typical bored road or railroad crossing. Boring requires the excavation of a pit on each side of the feature, the placement of boring equipment in the pit, and boring a hole under the road at least equal to the diameter of the pipe. For long crossings, sections can be welded onto the pipe string just before being pulled through the borehole. Boring will result in minimal or no disruption to traffic at road or railroad crossings. Each boring will be expected to take 1 to 2 days for most roads and railroads and up to 10 days for long crossings such as interstate or four-lane highways.

Most smaller, unpaved roads and driveways will be crossed using the open-cut method where permitted by local authorities or private owners. The open-cut method will require temporary closure of the road to traffic and establishment of detours. If no reasonable detour is feasible, at least one lane of traffic will be kept open, except during brief periods when it is essential to close the road to install the pipeline. Most open-cut road crossings can be finished and the road resurfaced in 1 or 2 days. Keystone will take measures, such as posting signs at open-cut road crossings, to ensure safety and minimize traffic disruptions.

2.18 Adverse Weather

The Contractor shall restrict certain construction activities and work in cultivated agricultural areas in excessively wet soil conditions to minimize rutting and soil compaction. In determining when or where construction activities should be restricted or suspended during wet conditions, the Contractor shall consider the following factors:

- the extent that rutting may cause mixing of topsoil with subsoil layers or damage to tile drains;
- excessive buildup of mud on tires and cleats;
- excessive ponding of water at the soil surface; and
- the potential for excessive soil compaction.

The Contractor shall implement mitigative measures as directed by Keystone in order to minimize rutting and soil compaction in excessively wet soil conditions which may include:

- restricting work to areas on the spread where conditions allow;
- using low ground weight, wide-track equipment, or other low impact construction techniques;
- limiting work to areas that have adequately drained soils or have a cover of vegetation ,such as sod, crops or crop residues, sufficient to prevent mixing of topsoil with subsoil layers or damage to drain tiles; and

- installing geotextile material or construction mats in problem areas.

"Stop work" authority will be designated to the chief inspector but will be implemented when recommended by the Environmental Inspector.

2.19 Cultural Resources

Keystone intends to avoid cultural resources to the extent practicable by rerouting the pipeline corridor and related appurtenances, avoiding construction activities on properties listed in or eligible for listing in the National Register of Historic Places (NRHP), as well as boring or using HDD through culturally sterile soils.

The Contractor shall implement the measures outlined in any unanticipated discovery plan or any Programmatic Agreement that is adopted to minimize disturbance to cultural sites and shall take immediate action as outlined in the Programmatic Agreement if any unanticipated cultural discovery is encountered during construction.

The preferred treatment of any historical property or culturally significant site is avoidance. Where required, Keystone will monitor the construction spread using a cultural resource monitor working under the direction of a professional who meets the standards of the *Secretary of the Interior's Historic Preservation Professional Qualification Standards* (48 FR 44716, September 29, 1983).

Prior to commencing construction, Keystone also will provide an appropriate level of training to all construction personnel so that the requirements of any unanticipated discovery plan or Programmatic Agreement are understood and unanticipated discoveries quickly identified.

In the event an unanticipated cultural discovery is made, the Contractor will immediately halt all construction activities within a 100-foot radius, including traffic; notify the Keystone Environmental Inspector; and implement interim measures to protect the discovery from looting or vandalism. The appropriate federal, state, local, or tribal authorities will be notified of discovery within 48 hours of the initial find. Construction will not proceed within the 100-foot radius of discovery site until all mitigation measures defined in the Programmatic Agreement are concluded and Keystone receives approval from the appropriate agencies that construction may resume. No work or activity within the 100-foot buffer area may take place until approvals are communicated at the spread level by the lead Environmental Inspector.

3.0 SPILL PREVENTION AND CONTAINMENT

Spill prevention and containment applies to the use and management of hazardous materials on the construction right-of-way and all ancillary areas during construction. This includes the refueling or servicing of all equipment with diesel fuel, gasoline, lubricating oils, grease, and hydraulic and other fluids during normal upland applications and special applications within 100 feet of perennial streams or wetlands.

Keystone will prepare a project-specific Spill Prevention Containment and Countermeasure (SPCC) Plan. The Contractor shall provide additional information to complete the SPCC Plan for each construction spread, and shall provide site-specific data that meets the requirements of 40 CFR Part 112 for every location used for staging fuel or oil storage tanks and for every location used for bulk fuel or oil transfer. Each SPCC Plan will be prepared prior to introducing the subject fuel, oil, or hazardous material to the subject location.

3.1 Spill Prevention

3.1.1 Staging Areas

Staging areas (including Contractor yards and pipe stockpile sites) shall be set up for each construction spread. Bulk fuel and storage tanks will be placed only at Contractor yards. No bulk fuel and storage tanks will be placed in the construction ROW. Hazardous materials at staging areas shall be stored in compliance with federal and state laws. The following spill prevention measures shall be implemented by the Contractor:

- Contractor fuel trucks shall be loaded at existing bulk fuel dealerships or from bulk tanks set up for that purpose at the staging area. In the former case, the bulk dealer is responsible for preventing and controlling spills.
- The Environmental Inspector shall inspect the tank site for compliance with the 100-foot setback requirement and approve the tank site prior to installing bulk fuel or storage tanks on the construction yard.
- Fuels and lubricants shall be stored only at designated staging areas. Storage of fuel and lubricants in the staging area shall be at least 100 feet away from the water's edge. Refueling and lubrication of equipment shall be restricted to upland areas at least 100 feet away from streams and wetlands.
- Contractors shall be required to perform all routine equipment maintenance at the staging area and recover and dispose of wastes in an appropriate manner.
- Fixed fuel dispensing locations will be provided with secondary containment to capture fuel from leaks, drips, and overfills.
- Temporary liners, berms, or dikes (secondary containment) shall be constructed around the aboveground bulk tanks, providing 110 percent containment volume of the largest storage tank or trailer within the containment structure, so that potential spill materials shall be contained and collected in specified areas. Tanks shall not be placed in areas subject to periodic flooding or washout.
- Drivers of tank trucks are responsible for safety and spill prevention during tank truck unloading. Procedures for loading and unloading tank trucks shall meet the minimum requirements established by the Department of Transportation.

- Drivers of tank trucks are responsible for setting brakes and chocking wheels prior to off loading. Warning signs requiring drivers to set brakes and chock wheels shall be displayed at all tanks. Proper grounding of equipment shall be undertaken during fuel transfer operations. Drivers shall observe and control the fueling operations at all times to prevent overfilling the temporary tank.
- Prior to departure of any tank truck, all vehicle outlets shall be examined closely by the driver for leakage, tightened, adjusted or replaced to prevent leakage while in transit.
- A supply of sorbent and barrier materials sufficient to allow the rapid containment and recovery of spills shall be maintained at each construction staging area. Sorbent and barrier materials shall also be utilized to contain runoff from contaminated areas.
- Shovels and drums shall be kept at each of the individual staging areas. In the event that small quantities of soil become contaminated, shovels shall be utilized to collect the soil and the material shall be stored in 55-gallon drums. Large quantities of contaminated soil may be bio-remediated on site or disposed in an approved landfill, subject to government approval, or collected utilizing heavy equipment, and stored in drums or other suitable containers prior to disposal. Should contamination occur adjacent to staging areas as a result of runoff, shovels or heavy equipment shall be utilized to collect the contaminated material. Contaminated soil shall be disposed of in accordance with state and federal regulations.
- Temporary aboveground tanks shall be subject to visual inspection on a monthly basis and when the tank is refilled. Inspection records shall be maintained. Operators shall routinely keep tanks under close surveillance and potential leaks or spills shall be quickly detected.
- Visible fuel leaks shall be reported to the Contractors' designated representative and corrected as soon as conditions warrant. Keystone's designated representative shall be informed.
- Drain valves on temporary tanks shall be locked to prevent accidental or unauthorized discharges from the tank.
- Oil and other hazardous materials stored in 350-gallon totes, 55-gallon drums, 5-gallon pails, smaller retail-size containers or other portable containers will be staged or stored in areas with a secondary temporary containment structure. Secondary containment structures may consist of temporary earthen berms with a chemical resistant liner, or a portable containment system constructed of steel, PVC, or other suitable material. The secondary containment structure will be capable of containing 110 percent of the volume of material stored in these areas.

Keystone may allow modification of the above specifications as necessary to accommodate specific situations or procedures. Any modifications must comply with all applicable regulations and permits.

3.1.2 Construction Right-of-Way

The Contractor will ensure that all equipment is free of leaks prior to use on the Project and prior to entering or working in or near waterbodies or wetlands. Throughout construction, the Contractor will conduct regular maintenance and inspections of the equipment to reduce the potential for spills or leaks.

Rubber-tired vehicles (pickup trucks, buses) normally shall refuel at the construction staging areas or commercial gas stations. Tracked machinery (backhoes, bulldozers) shall be refueled and lubricated on the construction right-of-way. Equipment maintenance shall be conducted in staging areas when practical. When impractical, repairs to equipment can be made on the construction right-of-way when approved by Keystone's representative.

Each fuel truck that transports and dispenses fuel to construction equipment or Project vehicles along the construction ROW or within equipment staging and material areas shall carry an oil spill response kit and spill response equipment onboard at all times. In the event that response materials are depleted through use or their condition is deteriorated through age, the materials will be replenished prior to placing the fueling vehicle back into service.

The following preventive measures apply to refueling and lubricating activities on the construction right-of-way:

- Construction activities shall be conducted to allow for prompt and effective cleanup of spills of fuel and other hazardous materials. Each construction crew, including cleanup crews shall have on hand sufficient tools and material to stop leaks and supplies of absorbent and barrier materials to allow rapid containment and recovery of spilled materials. Crew members must know and follow the procedure for reporting spills.
- Refueling and lubricating of construction equipment shall be restricted to upland areas at least 100 feet away from streams and wetlands. Where this is not possible (e.g., trench dewatering pumps), the equipment shall be fueled by designated personnel with special training in refueling, spill containment, and cleanup. The Environmental Inspector shall ensure that signs are installed identifying restricted areas.
- No fuel, oil or hazardous material storage, staging, or transfer other than refueling will occur within 100 feet of any storm drain, drop inlet, or high consequence area (HCA).
- Spent oils, lubricants, filters, etc. shall be collected and disposed of at an approved location in accordance with state and federal regulations.
- Equipment shall not be washed in streams.
- Stationary equipment will be placed within a secondary containment if it will be operated or require refueling within 100 feet of a wetland or waterbody boundary.

Keystone may allow modification of the above specifications as necessary to accommodate specific situations or procedures. Any modifications must comply with all applicable regulations and permits.

3.2 Contingency Plans

The Contractor shall develop emergency response procedures for all incidents (e.g., spills, leaks, fires) involving hazardous materials which could pose a threat to human health or the environment. The procedures shall address activities in all work areas, as well as during transport to and from the construction right-of-way and to any disposal or recycling facility.

3.3 Equipment

The Contractor shall retain emergency response equipment in all areas where hazardous materials are handled or stored. This equipment shall be readily available to respond to a hazardous material emergency. Such equipment shall include, but not be limited to, the following:

- first aid supplies;
- phone or communications radio;
- protective clothing (Tyvek suit, gloves, goggles, boots);
- hand-held fire equipment;
- absorbent material and storage containers;
- non-sparking bung wrench and shovel; and
- brooms and dust pan.

Hazardous material emergency equipment shall be carried in all mechanic and supervisor vehicles. This equipment shall include, at a minimum:

- first aid supplies;
- phone or communications radio;
- 2 sets of protective clothing (Tyvek suit, gloves, goggles, boots);
- 1 non-sparking shovel;
- 6 plastic garbage bags (20 gallon);
- 10 absorbent socks and spill pads;
- Hand-held fire extinguisher;
- barrier tape; and
- 2 orange reflector cones.

Fuel and service trucks shall carry a minimum of 20 pounds of suitable commercial sorbent material.

The Contractor shall inspect emergency equipment weekly, and service and maintain equipment regularly. Records shall be kept of all inspections and services.

3.4 Emergency Notification

Emergency notification procedures between the Contractor and Keystone shall be established in the planning stages of construction. A Keystone representative shall be identified to serve as contact in the event of a spill during construction activities. In the event of a spill meeting government reporting criteria, the Contractor immediately shall notify the Keystone representative who, in turn, shall notify the appropriate regulatory agencies.

Any material released into water that creates a sheen must be reported immediately to Keystone. The Contractor is required to notify Keystone immediately if there is any spill of oil, oil products, or hazardous materials that reaches a wetland or waterbody. Incidents on public highways shall be reported to Keystone and the appropriate agencies by Keystone.

If a spill occurs on navigable waters of the United States, Keystone shall notify the National Response Center (NRC) at 1-800-424-8802. For spills that occur on public lands, into surface waters, or into sensitive areas, the appropriate governmental agency's district office also shall be notified.

3.5 Spill Containment and Countermeasures

In the event of a spill of hazardous material, Contractor personnel shall:

- notify the appointed Keystone representative;
- identify the product hazards related to the spilled material and implement appropriate safety procedures, based on the nature of the hazard;
- control danger to the public and personnel at the site;
- implement spill contingency plans and mobilize appropriate resources and manpower;
- isolate or shutdown the source of the spill;
- block manholes or culverts to limit spill travel;
- initiate containment procedures to limit the spill to as small an area as possible to prevent damage to property or areas of environment concern (e.g., watercourses); and
- commence recovery of the spill and cleanup operations.

When notified of a spill, the Keystone representative shall immediately ensure that:

- Action is taken to control danger to the public and personnel at the site.
- Spill contingency plans are implemented and necessary equipment and manpower are mobilized.

- Measures are taken to isolate or shutdown the source of the spill.
- All resources necessary to contain, recover and clean up the spill are available.
- Any resources requested by the Contractor from Keystone are provided.
- The appropriate agencies are notified. For spills which occur on public lands, into surface waters or into sensitive areas, the appropriate federal or state managing office shall also be notified and involved in the incident.

For a land spill, berms shall be constructed with available equipment to physically contain the spill. Personnel entry and travel on contaminated soils shall be minimized. Sorbent materials shall be applied or, if necessary, heavily contaminated soils shall be removed to an approved facility. Contaminated sorbent materials and vegetation shall also be disposed of at an approved facility.

For a spill threatening a waterbody, berms or trenches shall be constructed to contain the spill prior to entry into the waterbody. Deployment of booms, skimmers, and sorbent materials shall be necessary if the spill reaches the water. The spilled product shall be recovered and the contaminated area shall be cleaned up in consultation with spill response specialists and appropriate government agencies.

4.0 UPLANDS (AGRICULTURAL, FOREST, PASTURE, RANGE AND GRASS LANDS)

4.1 Interference with Irrigation Systems

If existing irrigation systems (flood irrigation, ditch irrigation, pivot, wheel, or other type of spray irrigation systems), irrigation ditches, or sheet flow irrigation shall be impacted by the construction of the pipeline, the following mitigative measures shall be implemented unless otherwise approved or directed by Keystone:

- If it is feasible and mutually acceptable to Keystone and the landowner or landowner's designate, temporary measures shall be implemented to allow an irrigation system to continue to operate across land on which the pipeline is being constructed.
- If the pipeline or temporary work areas intersect an operational (or soon to be operational) pivot or other spray irrigation system, Keystone shall establish with the landowner or landowner's designate an acceptable amount of time the irrigation system may be out of service. If an irrigation system interruption results in crop damages, either on the pipeline construction right-of-way or off the construction right-of-way, the landowner shall be compensated reasonably for all such crop damages.
- If the pipeline or temporary work areas intersect an operational sheet flow irrigation system, Keystone shall establish with the landowner or landowner's designate an acceptable amount of time the irrigation system may be out of service. If an irrigation system interruption results in crop

damages, either on the pipeline construction right-of-way or off the construction right-of-way, the landowner shall be compensated reasonably for all such crop damages.

- Irrigation ditches that are active at the time of construction shall not be stopped or obstructed except for the length of time to install the pipeline beneath the ditch (typically, one day or less) unless otherwise approved or directed by Keystone.

4.2 Clearing

The objective of clearing is to provide a clear and unobstructed right-of-way for safe and efficient construction of the pipeline. The following mitigable measures shall be implemented:

- Construction traffic shall be restricted to the construction right-of-way, existing public roads, and approved private roads.
- Construction right-of-way boundaries including pre-approved temporary workspace shall be clearly staked to prevent disturbance to unauthorized areas.
- If crops are present, they shall be mowed or disced to ground level unless an agreement is made for the landowner to remove.
- Burning is prohibited on cultivated land.
- Construction right-of-way at timber shelterbelts in agricultural areas shall be reduced to the minimum necessary to construct the pipeline.

4.3 Topsoil Removal and Storage

The objective of topsoil handling is to maintain topsoil capability by conserving topsoil for future replacement and reclamation and to minimize the degradation of topsoil from compaction, rutting, loss of organic matter, or soil mixing so that successful reclamation of the right-of-way can occur. The following mitigative measures shall be implemented during topsoil removal and storage unless otherwise approved or directed by Keystone based on site-specific conditions or circumstances. All work shall be conducted in accordance with applicable permits.

- In areas designated for topsoil segregation, the actual depth of the topsoil, to a maximum depth of 12 inches, will be stripped from:
    - The area excavated above the pipeline; or
    - The area above the pipeline plus the spoil storage; or
    - The area above the pipeline plus the working side; or
    - Entire ROW

  as required by applicable permit agreements with the landowner or as dictated by site-specific conditions.

- Stripped topsoil is to be stockpiled in a windrow along the edge of the right-of-way. The Contractor shall perform work in a manner to minimize the potential for subsoil and topsoil to be mixed.
- Under no circumstances shall the Contractor use topsoil to fill a low area.
- If required due to excessively windy conditions, topsoil piles shall be tackified using either water or a suitable tackifier (liquid mulch binder).
- Gaps in the rows of topsoil will be left in order to allow drainage and prevent ponding of water adjacent to or on the right-of-way.
- Topsoil shall not be utilized to construct ramps at road or waterbody crossings.
- In areas with defined saline or sodic soil concerns, a triple-ditch method will be used to segregate problem soils as indicated in Detail 67 and 67A.
- If frozen topsoil conditions are encountered during winter construction, specialized construction equipment (i.e. ripping, frozen topsoil cutter, road reclaimer, etc) may be required to adequately segregate and conserve topsoil resources.

4.4 Grading

The objective of grading is to develop a right-of-way that allows the safe passage of equipment and meets the bending limitations of the pipe. The following mitigative measures shall be implemented during grading unless otherwise approved or directed by Keystone based on site-specific conditions or circumstances. However, all work shall be conducted in accordance with applicable permits.

- All grading shall be undertaken with the understanding that original contours and drainage patterns shall be re-established to the extent practicable..
- Agricultural areas that have terraces shall be surveyed to establish pre-construction contours to be utilized for restoration of the terraces after construction.
- On steep slopes, or wherever erosion potential is high, temporary erosion control measures shall be implemented.
- Bar ditches adjacent to existing roadways to be crossed during construction shall be adequately ramped with grade or ditch spoil to prevent damage to the road shoulder and ditch.
- Where the construction surface remains inadequate to support equipment travel, timber mats, timber riprap, or other method shall be used to stabilize surface conditions.

The Contractor shall limit the interruption of the surface drain network in the vicinity of the right-of-way using the appropriate methods:

- providing gaps in the rows of subsoil and topsoil in order to prevent any accumulation of water on the land;

- preventing obstructions in furrows, furrow drains, and ditches;
- installing flumes and ramps in furrows, furrow drains, and ditches to facilitate water flow across the construction right-of-way and allow for construction equipment traffic; and
- installing flumes over the trench for any watercourse where flow is continuous during construction.

4.5 Temporary Erosion and Sediment Control

4.5.1 General

Temporary erosion and sediment control measures shall be installed immediately after initial disturbance of the soil, maintained throughout construction (on a daily basis), and reinstalled as necessary until replaced by permanent erosion control structures or restoration of the construction right-of-way is complete.

Specifications and configurations for erosion and sediment control measures may be modified by Keystone as necessary to suit actual site conditions. However, all work shall be conducted in accordance with applicable permits.

The Contractor shall inspect all temporary erosion control measures at least daily in areas of active construction or equipment operation, weekly in areas with no construction or equipment operation, and within 24 hours of each significant rainfall event of 0.5 inches or greater. The Contractor shall repair all ineffective temporary erosion control measures as expediently as practicable.

4.5.2 Sediment Barriers

Sediment barriers shall be constructed of silt fence, staked hay or straw bales, compacted earth (e.g., drivable berms across travel lanes), sand bags, or other appropriate materials.

The Contractor shall install sediment barriers in accordance with Details 1 and 2 or as otherwise approved or directed by Keystone. The Contractor is responsible for properly installing, maintaining, and replacing temporary and permanent erosion controls throughout construction and cleanup. In wetland or riparian zones, the Contractor will install sediment control structures along the construction right-of-way edges prior to vegetation removal where practicable. The aforementioned sediment barriers may be used interchangeably or together depending on site-specific conditions. In most cases, silt fence shall be utilized where longer sediment barriers are required.

Sediment barriers shall be installed below disturbed areas where there is hazard of offsite sedimentation. These areas include:

- the base of slopes adjacent to road crossings;

- the edge of the construction right-of-way adjacent to and upgradient of a roadway, flowing stream, spring, wetland, or impoundment;
- trench or test water discharge locations where required;
- where waterbodies or wetlands are adjacent to the construction right-of-way; (the Contractor shall install sediment barriers along the edge of the construction right-of-way as necessary to contain spoil and sediment within the construction right-of-way)
- across the entire construction right-of-way at flowing waterbody crossings;
- right-of-way immediately upslope of the wetland boundary at all standard (saturated or standing water) wetland crossings as necessary to prevent sediment flow into the wetland; (Sediment control barriers are not required at “dry” wetlands.)
- along the edge of the construction right-of-way within standard (saturated or standing water) wetland boundaries as necessary to contain spoil and sediment within the construction right-of-way. Sediment control barriers are not required at “dry” wetlands (Detail 8).

Sediment barriers placed at the toe of a slope shall be set a sufficient distance from the toe of the slope, if possible, in order to increase ponding volume.

Sediment control barriers shall be placed so as not to hinder construction operations. If silt fence or straw bale sediment barriers (in lieu of drivable berms) are placed across the entire construction right-of-way at waterbodies, wetlands, or upslope of roads, a provision shall be made for temporary traffic flow through a gap for vehicles and equipment to pass within the structure. Immediately following each day’s shutdown of construction activities, a row of straw bales or a section of silt fence shall be placed across the up gradient side of the gap with sufficient overlap at each end of the barrier gap to eliminate sediment bypass flow, followed by bales tightly fitted to fill the gap. Following completion of the equipment crossing, the gap shall be closed using silt fence or straw bale sediment barrier.

The Contractor shall maintain straw bale and silt fence sediment barriers by removing collected sediment and replacing damaged bales. Sediment shall be removed and placed where it shall not reenter the barrier when sediment loading is greater than 40 percent or if directed by Keystone. If straw bale filters cannot be cleaned out due to access problems, the Contractor shall place a new row of sediment barriers upslope.

The Contractor shall use mulch and straw bales that are free of noxious weeds. Mulch or straw bales that contain evidence of noxious weeds or other undesirable species shall be rejected by the Contractor.

The Contractor shall remove sediment barriers, except those needed for permanent erosion and sediment control, during cleanup of the construction right-of-way.

4.5.3 Trench Plugs

The Contractor shall use trench plugs at waterbody and wetland crossings at the direction of the Environmental Inspector to prevent diversion of water into upland portions of the pipeline trench and to keep any accumulated trench water out of the waterbody. Trench plugs shall be of sufficient size to withstand upslope water pressure.

4.5.4 Temporary Slope Breakers (Water Bars)

The Contractor shall install temporary slope breakers on slopes greater than 5% on all disturbed lands at the following recommended spacing:

Slope (%)	Spacing (feet)
5 - 15	300
>15 - 30	200
>30	100

The gradient of each slope breaker shall be 2 to 4 percent.

If so directed by the landowner, the Contractor may not install temporary slope breakers (water bars) in cultivated land.

Temporary slope breakers shall be constructed of soil, silt fence, staked straw bales, sand bags, or similar materials authorized by Keystone.

The Contractor shall direct the outfall of each temporary slope breaker to a stable, well-vegetated area or construct an energy-dissipating device at the end of the slope breaker and off the construction right-of-way as permitted in the landowner agreement as shown in Detail 3. The outfall of each temporary slope breaker shall be installed to prevent sediment discharge into wetlands, waterbodies, or other sensitive resources.

Specifications and configurations for temporary slope breakers may be modified by Keystone as necessary to suit actual site conditions. However, all work shall be conducted in accordance with applicable permits.

4.5.5 Drainage Channels or Ditches

Drainage channels or ditches shall be used on a limited basis to provide drainage along the construction right-of-way and toe of cut slopes as well as to direct surface runoff across the construction right-of-way or away from disturbances and onto natural undisturbed ground. Channels or ditches shall be constructed by the Contractor during grading operations. Where there is inadequate vegetation at the channel or ditch outlet,

sediment barriers, check berms, or other appropriate measures shall be used to control erosion.

4.5.6 Temporary Mulching and Cover Crops

Unless otherwise directed by Keystone, the Contractor shall apply temporary seed and/or mulch on disturbed construction work areas that have been inactive for one month or are expected to be inactive for a month or more. The Contractor shall not apply temporary mulch in cultivated areas unless specifically requested by the landowner or in areas particularly prone to erosion. The Contractor shall not apply mulch within wetland boundaries.

Temporary mulch of straw or equivalent applied on slopes shall be spread uniformly to cover at least 75 percent of the ground surface at an approximate rate of 2 tons per acre of straw or its equivalent. Mulch application on slopes within 100 feet of waterbodies and wetlands shall be increased to an approximate rate of 3 tons per acre.

All seed that is used as a temporary cover crop will be approved and/or provided by Keystone.

4.5.7 Tackifier

When wetting topsoil piles with water does not prevent wind erosion, the Contractor shall temporarily suspend topsoil handling operations and apply a tackifier to topsoil stockpiles at the rate recommended by the manufacturer. The type of Tackifier will be approved by Keystone.

Should construction traffic, cattle grazing, heavy rains, or other related construction activity disturb the tackified topsoil piles and create a potential for wind erosion, additional tackifier shall be applied by the Contractor.

4.6 Stringing

The objective of stringing is to place the line pipe along the construction right-of-way for bending and welding in an expedient and efficient manner.

The Contractor shall utilize one or more of the following mitigative measures as applicable and when necessary to reduce compaction on the working side of the right-of-way or as directed by Keystone. However, all work shall be conducted in accordance with applicable permits.

- prohibiting access by certain vehicles;
- using only machinery possessing low ground pressure (tracks or extra-wide tires);
- limiting access and thus minimizing the frequency of all vehicle traffic;
- digging ditches to improve surface drainage;

- using timber riprap, matting, or geotextile fabric overlain with soil; and
- stopping construction for a period of time.

4.7 Trenching

The objective of trenching is to provide a ditch of sufficient depth and width with a bottom to continuously support the pipeline. During trenching operations, the following mitigative measures shall be implemented unless otherwise approved or directed by Keystone based on site-specific conditions or circumstances. All work shall be conducted in accordance with applicable permits.

- Where required, subsoil shall be segregated from topsoil in separate, distinct rows with a separation that shall limit any admixing of topsoil and subsoil during handling.
- Triple ditch soil handling will be completed at sites identified by Keystone according to Detail 67 and 67A to prevent soil degradation.
- Gaps must be left in the spoil piles that coincide with breaks in the strung pipe to facilitate natural drainage patterns and to allow the passage of livestock or wildlife.
- Trenching operations shall be followed as closely as practicable by lower in and backfill operations to minimize the length of time the ditch is open.
- Construction debris (e.g., welding debris) and other garbage shall not be deposited in the ditch.
- If trenching, pipe installation and backfill operations take place during frozen soil conditions, final clean-`up (including additional trench compaction, subsoil feathering, final contouring and topsoil replacement) will be delayed until the subsoil and topsoil thaw completely the following spring/summer. A pronounced subsoil berm will be left over the trench line until final clean-up takes place to account for settlement of thawing backfill. Gaps will be left in the berm to maintain cross-ROW drainage

The Contractor shall prepare a blasting plan that is applicable to any locations where blasting will be necessary adjacent to existing high pressure pipelines, overhead or underground utilities, farm operations, or public crossings. The Contractor and its blasting supervisor shall be thoroughly familiar with and comply with the rules and regulations of Occupational Safety and Health Administration (OSHA) and all federal, state, county and local regulations governing blasting operations. Keystone will file the blasting plan with applicable state or local jurisdictions, where required. Excavation and blasting along the ROW may uncover paleontological resources of scientific value. Keystone will consult with the appropriate regulatory agencies in each state on the applicability and requirements for Paleontological Resource Protection Plans. Keystone will prepare and file plans addressing vertebrate fossils with any respective states, as required.

Should blasting be necessary for removal of rock, the following mitigative measures may be implemented:

- The Contractor shall use non-electric initiation systems for all blasting operations. If required by the blasting plan, blasting will be monitored for vibration levels and peak particle velocity. This work shall be performed by a third-party vibration monitoring consultant hired by and reporting to the Constructor Representative. The Contractor shall arrange for detonations to be carried out in cooperation with this consultant.
- Prior to using explosives, the Contractor shall advise residents of the immediate area, in order to prevent any risk of accidents or undue disturbances.
- No blasting shall be done without approval of the Constructor Representative. Prior to any detonation of explosives in the vicinity of a loaded line, dwelling, structure, overhead or underground utility, farm operation, or public crossings, a minimum of 48 hour's notice shall be given to the Constructor Representative, in order that the appropriate people can be notified and the upstream and downstream mainline valves can be staffed.
- The Contractor shall obtain all necessary permits and shall comply with all legal requirements in connection with the use, storage, and transportation of explosives.
- Blasting mats or subsoil may be piled over the trench line to prevent rock from being blown outside the construction right-of-way.
- Each blasting location shall be cleared and cleaned up before and after all blasting operations.
- Blasting shall be carried out during regular, daylight working hours.
- The Contractor shall at all times protect his workers and the public from any injury or harm that might arise from drilling dust and the use of explosives.
- Only workers thoroughly experienced in handling explosives shall be permitted to supervise, handle, haul, load or shoot explosives. In those jurisdictions where the licensing of blasters is mandatory, the Contractor shall provide the Constructor Representative with proof of the required certification for every person so required.
- The drilling pattern shall be set in a manner to achieve smaller rock fragmentation (maximum 1 foot in diameter) in order to use as much as possible of the blasted rock as backfill material after the pipe has been padded in accordance with the specifications.
- Blasting testing of surface-water resources and water wells within 150 feet of the centerline will be performed in compliance with all applicable permits.

4.7.1 Trench Dewatering/Well Points

The Contractor shall make all reasonable efforts to discharge trench water in a manner that avoids damage to adjacent agricultural land, crops, and pasture. Damage includes, but is not limited to, the inundation of crops for more than 24 hours, deposition of sediment in ditches, and the deposition of gravel in fields or pastures.

If trench dewatering is necessary in an area where salt damage to adjacent crops is evident, the Environmental Inspector shall conduct a field conductivity test on the trench water before it is discharged. If the conductivity of the trench water is determined to potentially affect soil quality, it shall not be discharged to areas where salt damage to crops is evident, but shall be directed as feasible so that water flows over a well vegetated, non-cropland area or through an energy dissipater and sediment barrier.

When pumping water from the trench for any reason, the Contractor shall ensure that adequate pumping capacity and sufficient hose is available to permit dewatering as follows:

- No heavily silt-laden trench water shall be allowed to enter a waterbody or wetland directly but shall instead be diverted through a well vegetated area, a geotextile filter bag, or a permeable berm (straw bale or Keystone approved equivalent).
- Trench water shall not be disposed of in a manner which could damage crops or interfere with the functioning of underground drainage systems.

The Contractor shall screen the intake hose and keep the hose either one foot off the bottom of the trench or in a container to minimize entrainment of sediment.

4.8 Welding, Field Joint Coating, and Lowering In

The objectives of welding, field joint coating, and lowering in are to provide continuous segments of pipeline, to provide corrosion protection to the weld areas of the pipeline, and to place the pipeline in the center of the trench, without stress, at the required depth of cover. The following mitigative measures shall be followed during pipe welding, field joint coating, and lowering in, unless otherwise specified by Keystone in response to site-specific conditions or circumstances. All work shall be conducted in accordance with applicable permits.

- Shavings produced during beveling of the line pipe are to be removed immediately following this operation to ensure that livestock and wildlife do not ingest this material. When welding operations create a continuous line of pipe that may be left in the right-of-way for an extended period of time due to construction or weather constraints, a gap in the welded pipe shall be provided to allow for access at farm road crossings and for passage of livestock and wildlife.
- Prior to the application of epoxy powder, urethane epoxy, or other approved pipe coatings, a tarp shall be placed underneath the pipe in wetlands to collect any overspray of epoxy powder and liquid drippings. Excess powder, liquid, or other hazardous materials (e.g. brushes, rollers, gloves) shall be continuously collected and removed from the construction right-of-way and disposed of in a manner appropriate for these materials.

4.9 Padding and Backfilling

The objective of padding and backfilling is to cover the pipe with material that is not detrimental to the pipeline and pipeline coating. The following mitigative measures shall be utilized during backfilling, unless otherwise approved or directed by Keystone based on site-specific conditions or circumstances. All work shall be conducted in accordance with applicable permits.

- Excessive water accumulated in the trench shall be eliminated prior to backfilling.
- In the event it becomes necessary to pump water from open trenches, the Contractor shall pump the water and discharge it in accordance with the requirements of the Stormwater Pollution Prevention Plan (SWPPP) in order to avoid damaging adjacent areas. Detail 5 and Detail 6 provide typical examples of dewatering structures.
- If it is impossible to avoid water-related damages (including inundation of crops for more than 24 hours, deposition of sediment in ditches and other water courses, and the deposition of gravel in fields, pastures, and any water courses), Keystone shall reasonably compensate the landowners for the damage and/or shall correct the damage so as to restore the land, crops, pasture, water courses, etc. to their pre-construction condition.
- All pumping of water shall comply with existing drainage laws and local ordinances relating to such activities and provisions of the Clean Water Act.
- Prior to backfilling, all drain tile shall be permanently repaired, inspected, and the repair documented as described in Section 5.5.
- Prior to backfilling, trench breakers shall be installed on slopes where necessary to minimize the potential for water movement down the ditch and potential subsequent erosion.
- During backfill, the stockpiled subsoil shall be placed back into the trench before replacing the topsoil.
- Topsoil shall not be utilized for padding the pipe.
- Backfill shall be compacted to a minimum of 90% of pre-existing conditions where the trench line crosses tracks of wheel irrigation systems (pivots).
- To reduce the potential for ditch line subsidence, spoil shall be replaced and compacted by backhoe bucket or by the wheels or tracks of equipment traversing down the trench.
- The lesser of 4 feet or the actual depth of topsoil cover, shall not be backfilled with soil containing rocks of any greater concentration or size than existed prior to pipeline construction in the pipeline trench, bore pits, or other excavations.

4.10 Cleanup

The objective of cleanup activities shall be to prepare the right-of-way and other disturbed areas to approximate pre-activity ground contours where appropriate and to replace spoil and stockpiled material in a manner which preserves soil

capability and quality to a degree reasonably equivalent to the original or that of representative undisturbed land. The following mitigative measures shall be utilized during cleanup, unless otherwise approved or directed by Keystone based on specific conditions or circumstances. All work shall be conducted in accordance with applicable permits.

- Cleanup shall occur immediately following backfilling operations when weather or seasonal conditions allow.
- All garbage and construction debris (e.g., lathing, ribbon, welding rods, pipe bevel shavings, pipe spacer ropes, end caps, pipe skids) shall be collected and disposed of at approved disposal sites.
- The right-of-way shall be re-contoured with spoil material to approximate pre-construction contours and as necessary to limit erosion and subsidence. Loading of slopes with unconsolidated spoil material shall be avoided during slope re-contouring. Topsoil shall be replaced after re-contouring of the grade with subsoil. The topsoil shall be replaced on the subsoil storage area and over the trench so that after settling occurs, the topsoil's approximate original depth and contour (with an allowance for settling) shall be achieved.
- Where topsoil has been segregated, subsoil shall not be permanently placed on top of topsoil.
- Surface drainage shall be restored and re-contoured to conform to the adjacent land drainage system.
- Erosion control structures such as permanent slope breakers and cross ditches shall be installed on steep slopes where necessary to control erosion by diverting surface run-off from the right-of-way to stable and vegetated off right-of-way areas.
- During cleanup, temporary sediment barriers such as silt fence and hay bale diversions will be removed; accumulated sediment will re-contoured with the rest of the ROW; and permanent erosion controls will be installed as necessary.
- After construction, all temporary access shall be returned to prior construction conditions unless specifically agreed with the landowner or otherwise specified by Keystone.
- Warning signs, aerial markers, and cathodic protection test leads shall be installed in locations in compliance with U.S. Federal code and in locations that shall not impair farming operations where practicable.
- All bridges, fences and culverts existing prior to construction shall be restored to meet or exceed approximate pre-construction conditions. Caution shall be utilized when re-establishing culverts to ensure that drainage is not improved to a point that would be detrimental to existing waterbodies and wetlands.
- All temporary gates installed during construction shall be replaced with permanent fence unless otherwise requested by the landowner.

4.11 Reclamation and Revegetation

The objectives of reclamation and revegetation are to return the disturbed areas to approximately pre-construction use and capability. This involves the treatment of soil as necessary to preserve approximate pre-construction capability and the stabilization of the work surface in a manner consistent with the initial land use.

The following mitigative measures will be utilized unless otherwise approved or directed by Keystone based on site specific conditions or circumstances. However, all work shall be conducted in accordance with applicable permits.

4.11.1 Relieving Compaction

Compaction will typically be relieved in subsoils that have received substantial construction traffic, as determined by Keystone, prior to replacing and respreading topsoil. Compaction will typically not be relieved in topsoils that have been left in place and that have not been driven on. Any rock that is brought to the surface during decompaction activities will be removed until the quantity, size, and distribution of rock is equivalent to that found on adjacent land as determined by the Environmental Inspector. Compaction will typically be relieved as follows:

- Compacted cropland compacted shall be ripped a minimum of 3 passes at least 18 inches deep and all pasture shall be ripped or chiseled a minimum of three passes at least 12 inches deep before replacing topsoil.
- Areas of the construction right-of-way that were stripped for topsoil salvage shall be ripped a minimum of 3 passes (in cross patterns, as practical) prior to topsoil replacement. The approximate depth of ripping shall be 18 inches (or a lesser depth if damage may occur to existing drain tile systems). After ripping, the subsoil surface shall be graded smooth and any subsoil clumps broken up (disc and harrow) in an effort to avoid topsoil mixing.
- The de-compacted construction right-of-way shall be tested by the Contractor at regular intervals for compaction in agricultural and residential areas. Tests shall be conducted on the same soil type under similar moisture conditions in undisturbed areas immediately adjacent to the right-of-way to approximate pre-construction conditions. Penetrometers or other appropriate devices shall be used to conduct tests
- Topsoil shall be replaced to pre-existing depths once ripping and discing of subsoil is complete up to a maximum of 12 inches. Topsoil compaction on cultivated fields shall be alleviated with cultivation methods by the contractor.
- If there is any dispute between the landowner and Keystone as to what areas need to be ripped or chiseled, the depth at which compacted areas should be ripped or chiseled, or the necessity or

rates of lime and fertilizer application, the appropriate NRCS shall be consulted by Keystone and the landowner.

Plowing under of organic matter including wood chips and manure, or planting of a green crop such as alfalfa to decrease soil bulk density and improve soil structure or any other measures in consultation with the Natural Resource Conservation Service (NCRS) shall be considered if mechanical relief of compaction is deemed not satisfactory.

In the first year after construction, Keystone will inspect the ROW to identify areas of erosion or settling. Subsequently, Keystone will monitor erosion and settling through aerial patrols, which are part of Keystone's Integrity Management Plan, and through landowner reporting. Landowner reporting will be facilitated through use of Keystone's toll-free telephone number, which will be made available to all landowners on the ROW. Landowner reporting also may be facilitated through contact with Keystone's field offices.

Keystone plans to minimize impacts on soil productivity that may result from construction activities, but recognizes that some short- to long-term decreases in agricultural productivity are possible. Keystone recognizes its responsibility to restore agricultural productivity on the pipeline ROW and to compensate landowners for demonstrated decreases in productivity that may result from any degradation of agricultural soils along the ROW.

4.11.2 Rock Removal

- Rocks that are exposed on the surface due to construction activity shall be removed from the right-of-way prior to and after topsoil replacement This effort will result in an equivalent quantity, size and distribution of rocks to that found on adjacent lands, as determined by the Environmental Inspectors.
- Clearing of rocks may be carried out with a mechanical rock picker or by manual means, provided that preservation of topsoil is assured. Rock removed from the right-of-way shall be hauled off the landowner's premises or disposed of on the landowner's premises at a location that is mutually acceptable to the landowner and to Keystone.

4.11.3 Soil Additives

If site-specific conditions warrant and if agreed to by the landowner, the Contractor shall apply amendments (fertilizer and soil pH modifier materials and formulations) commonly used for agricultural soils in the area and in accordance with written recommendations from the local soil conservation authority, land management agencies, or landowner. Amendments shall be incorporated into the normal plow layer as soon as possible after application.

4.11.4 Seeding

- The final seed mix shall be based on input from the local Natural Resource Conservation Service and the availability of seed at the time of reclamation. The landowner may request specific seeding requirements during easement negotiations.
- Certificates of seed analysis are required for all seed mixes to limit the introduction of noxious weeds.
- Seed not utilized within 12 months of seed testing shall be approved by Keystone prior to use. Seeding shall follow cleanup and topsoil replacement as closely as possible. Seed shall be applied to all disturbed surfaces (except cultivated fields unless requested by the landowner) as indicated on the construction drawings
- If mulch was applied prior to seeding for temporary erosion control, the Contractor shall remove and dispose of the excess mulch prior to seedbed preparation to ensure that seedbed preparation equipment and seed drills do not become plugged with excess mulch; and to support an adequate seedbed; and to ensure that seed incorporation or soil packing equipment can operate without becoming plugged with mulch.
- Identified seeding areas shall be seeded as specified by Keystone. Seeding rates shall be based on pure live seed.
- Weather conditions, construction right-of-way constraints, site access, topography and soil type shall influence the seeding method to be used (i.e., drill seeding versus broadcast seeding).
- The Contractor shall delay seeding as directed by Keystone until the soil is in the appropriate condition for seeding.
- The Contractor shall use a Truax brand or Keystone approved equivalent-type drill seeder equipped with a cultipacker designed and equipped to apply grass and grass-legume seed mixtures with mechanisms such as seed box agitators to allow even distribution of all species in each seed mix, with an adjustable metering mechanism to accurately deliver the specified seeding rate and with a mechanism such as depth bands to accurately place the seed at the specified depth.
- The Contractor shall operate drill seeders at an appropriate speed so the specified seeding rate and depth is maintained, as directed by Keystone.
- The Contractor shall calibrate drill seeders so that the specified seeding rate is planted. The row spacing on drill seeders shall not exceed 8 inches.
- The Contractor shall plant seed at depths consistent with the local or regional agricultural practices.

- Broadcast or hydro seeding, used in lieu of drilling, shall utilize NRCS-recommended seeding rates. Where seed is broadcast, the Contractor shall use a harrow, cultipacker, or other equipment immediately following broadcasting to incorporate the seed to the specified depth and to firm the seedbed.
- The Contractor shall delay broadcast seeding during high wind conditions if even distribution of seed is impeded.
- The Contractor shall hand rake all areas that are too steep or otherwise cannot be safely harrowed or cultipacked in order to incorporate the broadcast seed to the specified depth.
- Hydro seeding may be used, on a limited basis, where the slope is too steep or soil conditions do not warrant conventional seeding methods. Fertilizer, where specified, may be included in the seed, virgin wood fiber, tackifier, and water mixture. When hydro-seeding, virgin wood fiber shall be applied at the rate of approximately 3,000 pounds per acre on an air-dry weight basis as necessary to provide at least 75% ground cover. Tackifier shall consist of biodegradable, vegetable-based material and shall be applied at the rate recommended by the manufacturer. The seed, mulch, and tackifier slurry shall be applied so that it forms a uniform, mat-like covering of the ground.
- Keystone shall work with landowners to discourage intense livestock grazing of the construction right-of-way during the first growing season by utilization of temporary fencing or deferred grazing, or increased grazing rotation frequency.

4.11.5 Permanent Erosion and Sediment Control

The Contractor shall restore all existing landowner soil conservation improvements and structures disturbed by pipeline construction to the approximate pre-construction line and grade. Soil conservation improvements and structures include, but are not limited to, grassed waterways, toe walls, drop inlets, grade control works, terraces, levees, and farm ponds.

4.11.5.1 Trench Breakers

The Contractor shall install trench breakers in steep terrain where necessary to limit the potential for trench line erosion and at the base of slopes adjacent to waterbodies and wetlands.

Trench breakers shall be constructed of materials such as sand bags, sand/cement bags, bentonite bags, or other suitable materials by the Contractor (Detail 7). The Contractor shall not use topsoil in trench breakers.

4.11.5.2 Permanent Slope Breakers (Water Bars)

Permanent slope breakers (water bars) shall be constructed of soil or, in some instances, sand bags.

The Contractor shall construct permanent slope breakers on the construction right-of-way where necessary to limit erosion, except in cultivated and residential areas. Slope breakers shall divert surface runoff to adjacent stable vegetated areas or to energy-dissipating devices as shown on Detail 3. In general, permanent slope breakers should be installed immediately downslope of all trench breakers. Permanent slope breakers shall be installed as specified on the construction drawings or generally with a minimum spacing as shown on the following table:

Slope (%)	Spacing (feet)
5 - 15	300
>15 – 30	200
>30	100

The gradient (fall) for each slope breaker shall be two percent to four percent unless otherwise approved by Keystone based on site-specific conditions.

The Contractor shall construct slope breakers to divert surface flow to a stable, well-vegetated area. In the absence of a stable area, the Contractor shall construct appropriate energy-dissipating devices at the end of the slope breaker and beyond the area disturbed by construction.

4.11.5.3 Mulching

The Contractor shall apply mulch on all areas with high erosion potential and on slopes greater than 8 percent unless otherwise approved by Keystone based on site-specific conditions or circumstances. The Contractor shall spread mulch uniformly over the area to cover at least 75 percent of the ground surface at an approximate rate of 2 tons per acre of straw or its equivalent. The Environmental Inspector may reduce the application rate or forego mulching an area altogether if there is an adequate cover of rock or organic debris to protect the slope from erosion, or if annual companion crops have stabilized the soil.

Mulch application includes straw mulch, hydro mulch and tackifier or other materials as approved by Keystone.

The Contractor shall use mulch that is free of noxious weeds.

The Contractor shall apply mulch immediately following seeding. The Contractor shall not apply mulch in wetlands.

If a mulch blower is used, the majority of strands of the mulching material shall not be shredded to less than 8 inches in length to allow anchoring. The Contractor shall anchor mulch immediately after application to minimize loss by wind and water.

When anchoring (straw crimping) by mechanical means, the Contractor shall use a tool specifically designed for mulch anchoring with flat, notched disks to properly crimp the mulch to a depth of 2 to 3 inches. A regular farm disk shall not be used to crimp mulch. The crimping of mulch shall be performed across the slope of the ground, not parallel to it. In addition, in areas of steep terrain, tracked vehicles may be used as a means of crimping mulch (equipment running up and down the hill to leave crimps perpendicular to the slope), provided they leave adequate coverage of mulch.

In soils possessing high erosion potential, the Contractor may be required to make two passes with the mulch-crimping tool; passes must be as perpendicular to the others as possible.

When anchoring with liquid mulch binders (tackifiers), the Contractor shall use a biodegradable tackifier derived from a vegetable-based, organic source. The Contractor shall apply mulch binders at rates recommended by the manufacturer.

The Contractor shall limit the use of tackifiers for anchoring straw and the use of hydromulch and tackifier to areas that are too steep or rocky to safely or effectively operate mechanical mulch-anchoring tools. No asphalt-based tackifiers shall be used on the Project.

4.11.5.4 Erosion Control Matting

Erosion control matting shall be applied where shown on the construction drawings as shown on Detail 4. The Contractor shall anchor the erosion control matting with staples or other approved devices.

The Contractor shall use erosion control matting made of biodegradable, natural fiber such as straw or coir (coconut fiber).

The Contractor shall prepare the soil surface and install the erosion control matting to ensure it is stable and the matting makes uniform contact with the soil of the slope face or stream bank with no bridging of rills, gullies, or other low areas.

4.11.5.5 Riprap and Stream Bank Stabilization

Disturbed banks of streambeds and waterbodies shall be restored to their approximate original contours unless otherwise directed. Erosion protection shall be applied as specified in the construction drawings.

Most restored banks will be protected through the use of flexible channel liners installed as specified in Detail 19.

If the original stream bank is excessively steep and unstable and/or flow conditions are severe, a more stable final contour may be specified and alternate stabilization measures may be installed.

Alternate stabilization measures may consist of rock riprap, bio-stabilization, or engineered structures such as brush layering, logwalls, cribwalls, or vegetated geo-grids. See Details 20, 23, and 24.

Stream bank riprap structures shall consist of a layer of stone underlain with approved filter fabric or a gravel filter blanket. Riprap shall extend from the stabilized streambed to the top of the stream bank. Native rock shall be utilized wherever practicable.

4.11.6 Fences

Upon completion of all backfilling, cleanup, and restoration, including mulching and seeding of the construction right-of-way, permanent repairs shall be made to all fences by using either the original material or good quality new material similar to existing fences.

Historic fences shall be carefully reassembled by hand from the original material. Where the original material has deteriorated to a state that makes it unsalvageable, replacement material similar to the original shall be used if possible.

4.11.7 Farm Terraces

Keystone will work with landowners and farm service agencies to ensure restoration of farm terraces to their pre-construction function. Keystone may elect to negotiate a fair settlement with the landowner to employ a local land leveling contractor to restore the terrace.

Before any groundwork is performed in areas with farm terraces, Keystone will conduct a civil survey to document the location and contours of each terrace. Both the channel contour and the terrace berm will be surveyed within the construction right-of-way and up to 100 feet on either side of the ROW boundaries. The pre-construction survey will

provide a baseline to ensure the proper restoration of the terrace following construction.

The Contractor will maintain the pre-disturbance drainage of water along the terrace channel and will install temporary flume pipe for this purpose. As necessary, temporary erosion control measures such as water bars and sediment barriers will be installed and maintained throughout construction to reduce the potential for soil erosion along or off the construction ROW.

Following installation of the pipe, the trench will be backfilled, and the Contractor will restore the terrace contours as agreed to with the landowner.

Should the landowner agree to have a local contractor restore the terraces, the Contractor will backfill the trench and restore the terrace using typical compaction methods for pipeline construction with the understanding that the landowner's contractor will re-excavate the location and re-install the terrace utilizing land levelling equipment and special compaction methods.

Should the landowner desire the Contractor to restore the terraces, the pipeline contractor will compact the trench before the terrace berm is replaced. Following restoration of the terraces, final contours and grades will be re-surveyed and documented with survey notes. Keystone will perform post-construction monitoring and inspection with the landowner's concurrence. Should the terraces require further work, Keystone will either compensate the landowner to perform the work or arrange for a local contractor to perform the work.

4.11.8 Right-of-Way and Pipeline Markers

Upon completion of all backfilling, cleanup and restoration, including mulching and seeding of the construction right-of-way, and during the time when the Contractor is making permanent repairs to fences, the Contractor shall install pipeline markers on each side of all roads, railroads, fence lines, stream crossings, and other areas where the pipeline markers do not conflict with intended land use.

4.12 Pasture and Range Lands

The following mitigative measures shall be implemented in addition to the requirements previously stated in Sections 4.1 thru 4.11 unless otherwise approved by Keystone based on site-specific conditions or circumstances. All work shall be conducted in accordance with applicable permits.

- Access across the right-of-way during construction shall be provided at locations requested by landowners, if practicable.
- Shavings produced during pipe bevel operations are to be removed immediately to ensure that livestock and wildlife do not ingest this material.

- Litter and garbage shall be collected and removed from the construction site at the end of the day's activities.
- Temporary gates shall be installed at fence lines for access to the construction right-of-way. These gates shall remain closed at all times. Upon completion of construction, the temporary gates shall be removed and the permanent fence replaced.
- Feeding or harassment of livestock or wildlife is prohibited.
- Construction personnel shall not be permitted to have firearms or pets on the construction right-of-way.
- All food and wastes shall be stored and secured in vehicles or appropriate facilities.
- Areas of disturbance in native range shall be seeded with a native seed mix after topsoil replacement.
- Improved pasture shall be seeded with a seed mix approved by individual landowners.

4.13 Forested Lands

Mitigation measures are required to ensure that pipeline construction activities have a minimal impact on forested lands.

Clearing, grubbing, and grading of trees, brush, and stumps shall be performed in accordance with the following mitigative measures in addition to the requirements previously stated in Sections 4.1 thru 4.11 unless otherwise approved or directed by Keystone based on site-specific conditions or circumstances. Keystone will address mitigation, reclamation and remediation measures with individual landowners and comply with any applicable state requirements. These measures include non-vegetative remediation to reverse impacts on windbreaks, shelterbelts, and living snow fences. Where the pipeline follows an existing ROW in forested areas, Keystone attempted to route the pipeline as close as practical to the existing ROW. All work shall be conducted in accordance with applicable permits.

- Prior to the start of clearing activity, right-of-way boundaries, including pre-approved temporary workspaces, shall be clearly staked to prevent disturbance of unauthorized areas.
- If trees are to be removed from the construction right-of-way, Keystone shall consult with the landowner or landowner's designate to see if there are trees of commercial or other value to the landowner. Timber shall be salvaged as per landowner request.
- If there are trees of commercial or other value to the landowner, Keystone shall allow the landowner the right to retain ownership of the trees with the disposition of the trees to be negotiated prior to the commencement of land clearing and included in the easement agreement.
- If not performed by the landowner, the construction right-of-way Contractor may salvage all marketable timber from designated areas.

- Tree stumps shall be grubbed to a maximum of 5 feet on either side of the trench line and where necessary for grading a level surface for pipeline construction equipment to operate safely.
- Keystone shall follow the landowner's or landowner designee's desires as stated in the easement agreement regarding the disposal of trees, brush, and stumps of no value to the landowner by burning, burial, etc., or complete removal from any affected property.
- Timber salvage operations shall use cut-off-type saw equipment. Felling shall be undertaken in a manner that minimizes butt shatter, breakage, and off ROW disturbance. Skidders or alternate equipment shall be used to transport salvaged logs to stacking sites.
- Trees shall be felled to fall toward the center line of the right-of-way to avoid breaking trees and branches off ROW. Leaners (felled trees that inadvertently fall into adjacent undisturbed vegetation) shall be salvaged.
- Trees and slash falling outside the right-of-way shall be recovered and disposed..
- Salvaged logs shall be limbed and topped before removal from the construction right-of-way. Log decks (if required) shall be oriented to best facilitate loading by picker trucks and be located adjacent to the working side of the right-of-way, where possible.
- The Contractor shall not be allowed to dispose of woody debris in wooded areas along the pipeline right-of-way.
- Pruning of branches hanging over the right-of-way shall be done only when necessary for construction. Any branch that is broken or seriously damaged should be cut off near its fork and the collar of the branch preserved.
- All tree wastes, stumps, tree crowns, brushes, branches, and other forest debris shall be either burned, chipped (using a mobile chipper), or removed from the right-of-way according to Keystone instructions contained in the specific mitigation measures. Burial of this waste material on the site by the Contractor shall require the landowner’s authorization. Chips must not be spread over cultivated land. However, they may be spread and incorporated with mineral soil over the forest floor at a density that shall not prevent revegetation of grass.
- Stump removal and brush clearing shall be done with bulldozers equipped with brush rakes to preserve organic matter.
- Decking sites shall be established: (1) approximately 2000 feet apart in timbered areas; (2) on sites located on approved temporary workspace in existing cleared areas; (3) in non-merchantable stands of timber; or (4) if no other options are available, in merchantable timber stands. Deck sites shall be appropriately sized to accommodate the loading equipment.
- If the landowner does not want the timber, the Contractor shall remove decked timber from the construction right-of-way and transport it to a designated all-weather access point or mill

4.14 Residential and Commercial/Industrial Areas

4.14.1 Residential and Commercial Areas

The principal measures that shall be used to mitigate impacts on existing residential and commercial areas include the following unless otherwise directed or approved by Keystone based on site-specific conditions or circumstances. All work shall be conducted in accordance with applicable permits.

- notifying landowners prior to construction;
- posting warning signs as appropriate;
- reducing the width of construction right-of-way, if practicable, by eliminating the construction equipment passing lane, reducing the size of work crews, or utilizing the “stove pipe” or “drag section” construction techniques;
- removing fences, sheds, and other improvements as necessary for protection from construction activities;
- to the extent possible, preserving mature trees and landscaping while ensuring the safe operation of construction equipment;
- fencing the edge of the construction work area that is within 25 feet to a residence for a distance of 100 feet on either side of the residence to ensure that construction equipment and materials, including the spoil pile, remain within the construction work area;
- limiting the hours during which operations with high-decibel noise levels (i.e., drilling and boring) can be conducted;
- limiting dust impact through prearranged work hours and by utilizing dust minimization techniques;
- ensuring that construction proceeds quickly through such areas, thus minimizing exposure to nuisance effects such as noise and dust;
- maintaining access and traffic flow during construction activities, particularly for emergency vehicles;
- cleaning up construction trash and debris daily;
- fencing or plating open ditches during non-construction activities;
- if the pipeline centerline is within 25 feet of a residence, ensuring that the trench is not excavated until the pipe is ready for installation and that the trench shall be backfilled immediately after pipe installation; and
- immediately after backfilling the trench, restoring all lawn areas, shrubs, specialized landscaping, fences, and other structures within the construction work area to its pre-construction appearance or the requirements of the landowner. Restoration work shall be done by personnel familiar with local horticultural and turf establishment practices.
- to the extent possible, preserving mature trees and landscaping while ensuring the safe operation of construction equipment;

4.14.2 Site-Specific Plans

For any residence or commercial/industrial building closer than 25 feet to the construction work area, Keystone shall prepare a site-specific construction plan. The plan shall include:

- a description of construction techniques to be used;
- a dimensioned site plan that shows, at a minimum:
  - the location of the residence or commercial/industrial area in relation to the new pipeline;
  - the edge of the construction work area;
  - the edge of the new permanent construction right-of-way; and
  - other nearby topographical obstacles including landscaping, trees, structures, roads, parking areas, ditches, and streams; and
- a description of how Keystone would ensure that the trench is not excavated until the pipe is ready for installation and that the trench is backfilled immediately after pipe installation.

4.14.3 Landowner Complaint Resolution Procedure

Keystone shall implement a landowner complaint procedure as follows:

- Landowners should first contact the construction spread office to express their concern over restoration or mitigation of environmental damages on their property. The Construction Manager or his designated representative shall respond to the landowner within 24 hours of receipt of the phone call.
- If the landowner has not received a response or is not satisfied with the response, he can contact Keystone's representative at 1-877-880-4881. The landowner should expect a response within 48 hours.

4.15 Fragile Soil Clean-up and Reclamation/Revegetation

4.15.1 General

Fragile soil types are a result of the high percentage of sand content that exists within the surficial soil. Theses soil types exist within regions found in southern South Dakota and central Nebraska and fragile due to their inherent high wind and water erosion potential, low water holding capacity and arid nature of the region, rolling to steep terrain and usually consists of predominantly native prairie landscapes and supports a variety of uses such as livestock grazing, wildlife habitat and recreational opportunities.

4.15.2 Right-of-way Construction

- KXL will educate construction personnel regarding these areas and the necessity to strictly adhere to Project Best Management Practices (BMPs) designed to minimize impacts.

- Minor route re-alignments will be incorporated through these areas to avoid particularly erosion-prone locations, such as ridge tops and existing blowouts as much as practicable.
- KXL will avoid highly saturated areas, such as wetland, to the maximum extent possible.
- Construction soil handling procedures will strive to reduce the width of disturbance to the native prairie landscape by adopting "Trench-line or Blade-width stripping procedures where practicable.
- Topsoil conservation will be conducted on all areas where excavation occurs.
- Topsoil piles will be protected from erosion through matting, mulching, watering or tackifying as deemed practicable.
- Traffic management limitations will be employed on specific areas possessing high erosion potential or sensitive habitat.

4.15.3 Right-of-Way Reclamation

- Native seed mixes will be developed with input from the local NRCS offices and through collaboration with regional experts. All seed will be certified noxious weed-free and will be calculated on a pure live seed (PLS) basis.
- Straw or native prairie hay may be used as mulch, applied to the right-of-way and crimped into the soil to prevent wind erosion. All mulch will be documented as noxious weed-free.
- Land imprinting may be employed to create impressions in the soil, thereby reducing erosion, improving moisture retention and creating micro-sites for seed germination.
- Sediment logs or straw wattles will be used in place of slope breakers (short terraces) that are constructed of soil. Using sediment logs will result in less soil disturbance to the right-of-way.
- Photodegradable matting will be applied on steep slopes or areas prone to extreme wind exposure such as north- or west-facing slopes and ridge tops. Biodegradable pins will be used in place of metal staples to hold the matting in place.
- Keystone will work with landowners to evaluate fencing the right-of-way from livestock, or alternatively, provide compensation to rest a pasture until vegetation can become established. Management concerns such as livestock access to water or movement within a pasture would be incorporated as necessary.

4.15.4 Post-Construction

Keystone is committed to post-construction monitoring and repair and will monitor reclamation on the right-of-way for several years and repair

erosion and reseed poorly revegetated areas as necessary. During monitoring, landowners are informed of our efforts and intentions.

A noxious weed management plan will be established on these lands pending consultation with state and county experts

4.16 Operations and Maintenance

Operations and maintenance programs, such as vegetation management, pipeline maintenance, integrity surveys, and hydrostatic testing, may have an impact on the final reclamation of the right-of-way. To ensure the integrity of the facility and land surface reclamation of the right-of-way is maintained after completion of construction and that regulatory requirements are adhered to during operations, the following measures shall be implemented unless otherwise directed by Keystone in response to site-specific conditions or circumstances. All work shall be conducted in accordance with applicable permits.

- Keystone shall monitor the pipeline right-of-way and all stream crossings for erosion or other potential problems that could affect the integrity of the pipeline. Any erosion identified shall be reclaimed as expediently as practicable by Keystone or by compensating to the landowner to reclaim the area.
- Trench depressions on ditch line that may interfere with natural drainage, vegetation establishment, or land use shall be repaired as expediently as practicable by Keystone or by compensating the landowner to repair the area.
- Post-construction monitoring inspections shall be conducted after the first growing season to determine the success of revegetation, unless otherwise required by permit. Areas which have not been successfully re-established shall be revegetated by Keystone or by compensation of the landowner to reseed the area. If, after the first growing season, revegetation is successful, no additional monitoring shall be conducted unless otherwise required by permit.
- In non-agricultural areas, revegetation shall be considered successful if, upon visual survey, the density and cover of non-nuisance vegetation are similar in density and cover to adjacent undisturbed lands, unless otherwise required by permit.
- In agricultural areas, revegetation shall be considered successful if crop yields are similar to adjacent undisturbed portions of the same field.
- Restoration shall be considered successful if the surface condition is similar to adjacent undisturbed lands, construction debris is removed (unless requested otherwise by the landowner or land managing agency), revegetation is successful, and drainage has been restored.
- Weed control measures shall be implemented as required by any applicable plan and in conjunction with the landowner.
- Keystone shall be responsible for correcting tile line or irrigation system

repairs that fail, provided those repairs were made by Keystone. Keystone shall not be responsible for tile line or irrigation system repairs which Keystone compensated the landowner to perform.

- When requested by owners in cultivated land, Keystone shall monitor the yield of land impacted by construction with the help of agricultural specialists. If yield deficiencies are indicated compared to yields on unaffected land, Keystone will compensate the landowner for reduced yields and shall implement procedures to return the land to equivalent capability.
- In residential areas, landowners may use the right-of-way provided they do not interfere with the rights granted to Keystone. Trees, bushes, structures, including houses, tool sheds, garages, poles, guy wires, catch basins, swimming pools, trailers, leaching fields, septic tanks, and any other objects not easily removable, shall not be permitted on the permanent construction right-of-way without the written permission of Keystone, because they could impair access for maintenance of the pipeline.
- Keystone shall maintain communication with the landowner and tenant throughout the operating life of the pipeline to allow expedient communication of issues and problems as they occur. Keystone shall provide the landowner with corporate contact information for these purposes. Keystone shall work with landowners to prevent excessive erosion on lands disturbed by construction. Reasonable methods shall be implemented to control erosion. These may not be implemented if the property across which the pipeline is constructed is bare cropland which the landowner intends to leave bare until the next crop is planted.
- If the landowner and Keystone cannot agree upon a reasonable method to control erosion on the landowner's property, the recommendations of the appropriate NRCS office shall be considered by Keystone and the landowner.

5.0 DRAIN TILE SYSTEMS

5.1 General

If underground drainage tile is damaged by the pipeline installation, it shall be repaired in a manner that ensures the tile line's proper operating condition at the point of repair. Keystone may elect to negotiate a fair settlement with the affected county or landowner for repair of the damaged drain tile. In the event the landowner chooses to have the damaged tile repaired by Keystone, the Contractor shall follow these guidelines and procedures to identify the location of drain tiles, to mitigate damages to drain tiles prior to and during construction, to repair drain tiles damaged during installation of the pipeline, to inspect the proper repair of drain tiles, and to provide post-construction monitoring to determine any impacts caused by repair of drain tiles. Since all public and private drain tile systems are unique, i.e., varying age, depth of cover, type of material, geometry on the land, etc., it is not possible to develop a standard procedure for resolving each county’s or landowner’s drain tile issues. These guidelines provide a basis on which to develop site specific methodology to mitigate damage and to repair drain tiles affected by construction of the Project. A typical right-of-way layout and typical orientation for crossing drain tiles is provided in Detail 25. Typical header and main

crossovers are provided in Details 26 and 27. Actual measures will be developed based on site-specific information unique to specific installations. However, all work will be conducted in accordance with applicable permits.

5.2 Identification and Classification of Drain Tile Systems

Personnel shall attempt to identify and classify existing drain tile systems by meeting with local public officials and county engineers, and individual private landowners and tenants.

5.2.1 Publicly Owned Drain Tiles

Personnel shall identify and meet with the responsible county or local authority responsible for publicly owned drain tiles. Publicly owned drain tiles shall be identified and documented on the Project's 1" = 2000' USGS quad strip maps and additional data collected for input into an electronic spreadsheet by county, township, range, and section; responsible agency; and size, type, and depth of cover (if known). This data shall be cross-referenced to the centerline survey to be completed by Keystone. Additionally, any public records including maps or easement instruments on the drain tiles shall be acquired as well as any requirements of the local authority for installation of the pipeline.

5.2.2 Privately Owned Drain Tiles

Right-of-way agents shall meet with landowners and tenants of privately owned land along the route. As a minimum, the right-of-way agents shall ascertain the data concerning drain tiles outlined in a landowner questionnaire. The questionnaire requests data concerning: type of drain tile system; size, type of material, and depth of cover; preference for repair of drain tiles; and identification of local drain tile contractors. These data shall be collected into an electronic spreadsheet for utilization by right-of-way personnel in negotiating payments for easements and damages and by engineering or construction personnel for inclusion in specifications for the construction Contractor.

5.3 Mitigation of Damage to Drain Tile Systems

Keystone shall undertake mitigation measures to reduce damage to publicly and privately owned drain tile systems prior to and during installation of the pipeline.

5.3.1 Non-interference with Drain Tile

The Project shall be installed at a depth of cover and elevation so as not to interfere with the elevation and grade of existing drain tiles where practicable. Where not practicable, Keystone shall pursue alternative mitigation measures mutually acceptable to the landowner and jurisdictional agencies. Typically, the pipeline shall be installed below the elevation of drain tiles with a minimum clearance of 12 inches. Detail 25, Typical Right-of-Way Layout/Soil Handling, represents a typical drain tile crossing by the

pipeline with additional temporary work space to facilitate handling of topsoil and trench spoil created by the additional depth of cover for the pipeline.

5.3.2 Non-disturbance of Drain Tile Mains

Publicly owned and privately owned drain tile mains shall be identified through the processes identified in Section 5.2. Drain tile mains are essential to the overall drainage system of a land area and if disturbed, may require excessive pumping/dewatering of the pipe trench unless temporarily repaired and maintained until permanently repaired.

Keystone shall review drain tile mains and consider their size, flow rate, type of material, depth of cover, and geographic location. If determined to be practicable and reasonable for construction, the drain tile main shall not be cut and repaired during mainline installation (a pipe section shall be left out and installed by a tie-in crew without damaging the drain tile main).

5.3.3 Relocation or Replacement of Existing Drain Tiles Prior to Construction

In many instances, drain tile systems that have been installed after the installation of adjacent existing pipelines were installed with “headers” parallel to the existing pipeline with periodic jump overs as depicted on Detail 26, Header/Main Crossovers of Keystone XL Pipeline. The distance of these headers from the existing pipeline may vary.

Some of these drain tile headers may be most effectively relocated and/or replaced to the east of the Project. The existing header will be capped and made into a single drain tile as depicted on Detail 27, Relocate/Replace Drainage Header/Main. This could reduce the number of drain tile crossings on a particular landowner’s property by a significant quantity, thereby reducing the risk that repairs will fail.

5.3.4 Future Drain Tiles/Systems

Keystone shall attempt to determine where public agencies and private landowners or tenants are proposing to install drain tile systems in the future. These locations shall be input into an electronic spreadsheet by county, township, range, and section; landowner or responsible public agency; and proposed size and depth of cover. Keystone shall endeavor to construct the pipeline at a depth and elevation to accommodate the future installation of the proposed drain tile systems.

5.3.5 Other Mitigation Measures

Other mitigation measures that may be implemented during installation of the pipeline are as follows:

- not removing topsoil from the working side of the construction right-of-way to prevent crushing of drain tile by heavy equipment;
- spreading ditch and spoil side topsoil (not subsoil) over the working side to provide additional soil depth to protect existing drain tiles;

- restricting the work of the pipe lower in crew if ground conditions are too wet to adequately support the heavy equipment;
- limiting travel of heavy equipment the working lane of the construction right-of-way where possible;
- limiting travel of heavy equipment to one pass over the drain tile per work crew where possible; and
- removing and replacing topsoil during drain tile replacement should tile be crushed on the working side of the right-of-way.

5.4 Responsibility for Repair of Drain Tile Systems

Temporary and permanent drain tile repairs shall be the responsibility of the Contractor. The physical repairs shall be made by qualified and experienced drain tile repair personnel.

5.4.1 Local Drain Tile Contractor Repair

Keystone shall identify and qualify local drain tile contractors in the geographical area of the pipeline route from interviews with local public officials, landowners, tenants, and drain tile contractors. The preferred responsibility for permanent repair of drain tiles shall be for the pipeline Contractor to subcontract the supervision and repair to local reputable drain tile contractors acceptable to the landowners and tenants.

5.4.2 Pipeline Contractor Repair

In the event local drain tile contractors are not available to subcontract the supervision and repair, permanent repair shall be made with the Contractor's supervision, equipment, and labor.

5.4.3 Landowner/Tenant Repair

The landowner or tenant may agree to take responsibility for the permanent repair of his drain tiles if not precluded by regulatory agency. The landowner or tenant shall be requested to ensure his ability to coordinate and complete the drain tile repair in a timely manner to allow the pipeline Contractor to completely backfill the damaged drain tile for repair by landowner/tenant in the immediate future. Keystone shall require that its representative be present to ensure the permanent drain tile repairs are made in accordance with the minimum requirements of this manual.

5.5 Drain Tile Repairs

The Contractor shall endeavour to locate all tile lines within the construction right-of-way prior to and during installation so repairs can be made if necessary.

5.5.1 Temporary Repairs During Construction

Drain tiles damaged or cut during the excavation of the trench shall be marked with a lath and ribbon in the spoil bank. Care shall be taken to

locate markers where the chance of disturbance shall be minimized and a written record maintained of each drain tile crossing. A work crew following the pipeline trench crew shall complete a temporary repair to allow continuing flow. Detail 28, Temporary Drain Tile Repair, depicts the materials and installation procedure to complete the temporary repair. If a drain tile line shall not be temporarily repaired, the open ends of the drain tile shall be screened to prevent entry of foreign materials and small animals.

5.5.2 Permanent Repairs

Permanent repairs shall be made for all drain tiles damaged by installation of the pipeline.

5.5.2.1 Ditch Line Only Repairs

If water is flowing through a damaged tile line, the tile line shall be immediately and temporarily repaired until such time that permanent repairs can be made. If tile lines are dry and water is not flowing, temporary repairs are not required if the permanent repair is made within 7 days of the time damage

occurred. The temporary repair shall be removed just prior to lowering in the pipeline.

Drain tiles must be permanently repaired before the pipeline trench is backfilled and within 14 days of construction completion, weather and soil conditions permitting. All tile lines shall be repaired with materials of the same or better quality as that which was damaged. The drain tile marker shall not be removed until the tile repairs have been inspected, approved, and accepted by Keystone's inspectors, the county inspectors, where applicable, and the landowner or tenant. Detail 29, Permanent Repair Method of Drain Tiles, depicts the minimum materials and installation procedure to complete a permanent repair.

5.5.2.2 Ditch Line and Temporary Work Space Repairs

Prior to making the permanent drain tile repair, the Contractor shall probe a segmented sewer rod with a plug that is not more than 15% smaller than the internal diameter of the drain tile to determine if additional damage has occurred to the drain tile. If the probe does not freely insert into the drain tile across the temporary workspace of pipeline construction, the Contractor shall excavate, expose, and repair the damaged drain tile to its original or better condition.

5.6 Inspection/Acceptance of Drain Tile Repairs

Drain tile repairs shall be inspected by Keystone construction inspectors, county inspectors, as applicable, and the landowner or tenant or his representative.

Keystone shall designate inspector(s) for the sole purpose and responsibility for inspection of all repairs of drain tiles. These inspectors shall be, if possible, employed from local drain tile installation contractors, local farmers with extensive drain tile experience, or previously employed or retired employees of local jurisdictions familiar with drain tile installation and repair. In the event that a sufficient quantity of inspectors from these sources is not available, Keystone shall conduct in-the-field training seminars on drain tile repair for additional inspection personnel.

Inspection personnel shall observe the permanent repair of all drain tiles to ensure the replacement drain tile is: (1) the proper size and type; (2) installed at the proper grade; (3) properly supported and backfill beneath the drain tile is properly placed and compacted; and (4) properly tied into the existing drain tile. The inspection shall be documented on the Drain Tile Inspection Report Form.

A drain tile repair shall not be accepted until Keystone's construction inspector and the landowner or tenant or designated representative approves the inspection form.

6.0 WETLAND CROSSINGS

6.1 General

Wetland boundaries shall be clearly marked in the field with signs and/or highly visible flagging during construction.

In the event a waterbody crossing is located within or adjacent to a wetland crossing, the measures of both Section 6 - Wetland Crossings and Section 7 - Waterbodies and Riparian Lands shall be implemented to the extent practicable.

A dry wetland is defined in Section 6.5.1. In these wetlands, equipment can traverse the wetland without the support of mats or timber riprap.

A standard wetland environment typically has soils that are saturated and non-cohesive. Difficult trenching conditions are likely resulting in excessively wide trenches. In these wetland environment types, supplemental support in the form of timber riprap or prefabricated equipment mats may be required for construction equipment to safely and efficiently operate.

A flooded wetland involves the presence of standing water over much of the wetland area. Equipment typically cannot traverse the wetland and must generally move around that portion of the area. Access is typically limited to marsh backhoes or equipment working from flexifloats or equivalents.

Keystone may allow modification of the following specifications as necessary to accommodate site-specific conditions or procedures. Any modifications must still comply with all applicable regulations and permits.

6.2 Easement and Workspace

The Contractor shall maintain wetland boundary markers during construction in all areas and until permanent seeding is complete in non-cultivated areas.

The width of the construction right-of-way shall be reduced to 85 feet or less in standard wetlands unless non-cohesive soil conditions require utilization of a greater width and unless the USACE or other regulatory authority authorizes a greater width.

The Contractor shall locate extra work areas (such as staging areas and additional spoil storage areas) shall be at least 10 feet away from wetland boundaries, where topographic conditions permit.

The Contractor shall limit clearing of vegetation between extra work areas and the edge of the wetland to the construction right-of-way and limit the size of extra work areas to the minimum needed to construct the wetland crossing.

6.3 Vehicle Access and Equipment Crossing

The only access roads, other than the construction right-of-way, that the Contractor shall use in wetlands are those existing public roads and private roads acquired by Keystone from the landowner shown on the construction drawings.

To the extent practicable, the Contractor's construction equipment operating in saturated wetlands or wetlands with standing water shall be limited to that needed to clear the construction right-of-way, dig the trench, fabricate and install the pipeline, backfill the trench, and restore the construction right-of-way.

If equipment must operate within a wetland containing standing water or saturated soils, the Contractor shall use the following methods for equipment access unless otherwise approved by Keystone based on site-specific conditions:

- wide-track or balloon-tire construction equipment; and
- conventional equipment operated from timber and slash (riprap) cleared from the right-of-way, timber mats, or prefabricated equipment mats.

6.4 Temporary Erosion and Sediment Control

The Contractor shall install sediment barriers across the entire construction right-of-way immediately upslope of the wetland boundary at all standard wetland crossings, as necessary, to prevent sediment flow into the wetland. Sediment barriers must be properly maintained by the Contractor throughout construction and reinstalled as necessary. In the travel lane, these may incorporate removable sediment barriers or drivable berms. Removable sediment barriers can be removed during the construction day, but shall be re-installed after construction has stopped for the day or when heavy precipitation is imminent. The Contractor shall maintain sediment barriers until replaced by permanent erosion controls or restoration of adjacent upland areas is complete. The Contractor shall not install sediment barriers at wetlands designated as "dry" unless otherwise specified by Keystone.

Where standard wetlands are adjacent to the construction right-of-way, the Contractor shall install sediment barriers along the edge of the construction right-of-way as necessary to prevent a sediment flow into the wetland.

6.5 Wetland Crossing Procedures

The following general mitigative procedures shall be followed by the Contractor in all wetlands unless otherwise approved or directed by Keystone based on site-specific conditions. All work shall be conducted in accordance with applicable permits.

- limit the duration of construction-related disturbance within wetlands to the extent practicable;

- use no more than two layers of timber riprap to stabilize the construction right-of-way;
- cut vegetation off at ground level leaving existing root systems in place and remove it from the wetland for disposal;
- limit pulling of tree stumps and grading activities to directly over the trench line unless safety concerns require the removal of stumps from the working-side of the construction ROW;
- segregate a maximum of 12 inches of topsoil from the area disturbed by trenching in dry wetlands, where practicable;
- restore topsoil to its approximate original stratum, after backfilling is complete;
- dewater the trench in a manner to prevent erosion and heavily silt-laden flowing directly into any wetland or waterbody;
- remove all timber riprap and prefabricated equipment mats upon completion of construction;
- locate hydrostatic test manifolds outside wetlands and riparian areas to the maximum extent practicable;
- prohibit storing hazardous materials, chemicals, fuels, lubricating oils, or perform concrete coating activities in a wetland, or within 100 feet of any wetland boundary;
- perform all equipment maintenance and repairs upland locations at least 100 feet from waterbodies and wetlands;
- avoid parking equipment overnight within 100 feet of a watercourse or wetland;
- prohibit washing equipment in streams or wetlands;
- install trench breakers and/or seal the trench to maintain the original wetland hydrology, where the pipeline trench may drain a wetland;
- attempt to refuel all construction equipment in an upland area at least 100 feet from a wetland boundary (otherwise follow the procedures outlined in Section 3); and
- avoid sand blasting in wetlands to the extent practicable. If sandblasting is performed within a wetland, the Contractor shall place a tarp or suitable material in such a way as to collect as much waste shot as possible and dispose of the collected waste. The Contractor shall clean up all visible deposits of wastes and dispose of the waste at an approved disposal facility.

Specific procedures for each type of wetland crossing method are listed below and shall be designated on the construction drawings but may be modified depending on site conditions at the time of construction. All work shall be conducted in accordance with applicable permits.

6.5.1 Dry Wetland Crossing Method

Topsoil shall be segregated. Pipe stringing and fabrication may occur within the wetland adjacent to the trench line or adjacent to the wetland in a designated extra workspace.

The dry wetland crossing procedure depicted in Detail 8 shall be used where this type of wetland is identified on the construction drawings. The following are exceptions to standard wetland crossing methods:

- The width of the construction right-of-way for upland construction is maintained through the wetland.
- Where extra work areas (such as staging areas and additional spoil storage areas) are designated on the construction drawings, they may be placed no closer than 10 feet from the wetland's edge.
- Seeding requirements for agricultural lands shall be applied to farmed wetlands.

6.5.2 Standard Wetland Crossing Method

Topsoil stripping is impracticable due to the saturated nature of the soil. Pipe stringing and fabrication may occur within the wetland adjacent to the trench line or adjacent to the wetland in a designated extra workspace. Based upon the length of a standard wetland crossing and presence of sufficient water to float the pipe, the Contractor may elect to install a standard wetland crossing utilizing the “push/pull” method.

The standard wetland crossing procedure depicted in Detail 9 shall be used where this type of wetland is identified on the construction drawings.

Procedures unique to standard wetlands include:

- limiting construction right-of-way width to a maximum of 85 feet unless site conditions warrant a wider width;
- utilizing low-ground-pressure construction equipment or support equipment on timber riprap or timber mats; and
- installing sediment barriers across the entire right-of-way where the right-of-way enters and exits the wetland.

6.5.3 Flooded Push/Pull Wetland Crossing Method

Where standing surface water or high groundwater levels make trenching difficult, trench widths up to 35 feet are common. Topsoil stripping is impossible due to the flooded conditions. Pipe stringing and fabrication is required adjacent to the wetland in a designated extra workspace. Using floatation devices, the pipe string is pushed and pulled from the extra workspace to the trench.

The Push/Pull wetland crossing procedure as depicted in Detail 10 shall be used where water is sufficient to float the pipeline in the trench and other site conditions allow.

Clean metal barrels or Styrofoam floats may be used to assist in the flotation of the pipe. Metal banding shall be used to secure the barrels or floats to the pipe. All barrels, floats, and banding shall be recovered and removed upon completion of lower in. Backfill shall not be allowed before recovery of barrels, floats, and banding.

6.6 Restoration and Reclamation

All timber riprap, timber mats, and prefabricated equipment mats and other construction debris shall be removed upon completion of construction. As much as is feasible, the Contractor shall replace topsoil and restore original contours with no crown over the trench. Any excess spoil shall be removed from the wetland. The Contractor shall stabilize wetland edges and adjacent upland areas by establishing permanent erosion control measures and revegetation, as applicable, during final clean up.

For each standard wetland crossed, the Contractor shall install a permanent slope breaker and trench breaker at the base of slopes near the boundary between the wetland and adjacent upland areas. The Contractor shall locate the trench breaker immediately upslope of the slope breaker.

The Contractor shall not use fertilizer, lime, or mulch in wetlands unless required in writing by the appropriate land management agency.

All wetland areas within conservation lands or easements will be restored to a level consistent with any additional criteria established by the relevant managing agency.

7.0 WATERBODIES AND RIPARIAN AREAS

7.1 General

The Contractor shall comply with requirements of all permits issued for the waterbody crossings by federal, state or local agencies.

Waterbody includes any areas delineated as jurisdictional natural or artificial stream, river, or drainage, and other permanent waterbodies such as ponds and lakes:

- Minor Waterbody includes all waterbodies less than or equal to 10 feet wide at the water's edge at the time of construction.
- Intermediate Waterbody includes all waterbodies greater than 10 feet wide but less than or equal to 100 feet wide at the water's edge at the time of construction.
- Major Waterbody includes all waterbodies greater than 100 feet wide at the water's edge at the time of construction.

In the event a waterbody crossing is located within or adjacent to a wetland crossing, the Contractor, to the extent practicable, shall implement the provisions of both Section 6 - Wetland Crossings and Section 7 - Waterbodies and Riparian Areas.

The Contractor shall supply and install advisory signs in a readily visible location along the construction right-of-way at a distance of approximately 100 feet on each side of the crossing and on all roads which provide direct construction access to waterbody crossing sites. Signs shall be supplied, installed, maintained, and then removed upon completion of the Project. Additionally, signs shall be supplied and installed by the Contractor on all intermediate and major waterbodies accessible to recreational boaters warning boaters of pipeline construction operations.

The Contractor shall not store hazardous materials, chemicals, fuels, lubricating oils, or perform concrete coating within 100 feet of any waterbody. The Contractor shall not refuel construction equipment within 100 feet of any waterbody. If the Contractor must refuel construction equipment within 100 feet of a waterbody, it must be done in accordance with the requirements outlined in Section 3. All equipment maintenance and repairs will be performed in upland locations at least 100 feet from waterbodies and wetlands. All equipment parked overnight shall be at least 100 feet from a watercourse or wetland, if possible. Equipment shall not be washed in streams or wetlands.

Throughout construction, the Contractor shall maintain adequate flow rates to protect aquatic life and to prevent the interruption of existing downstream uses.

Keystone may allow modification of the following specifications as necessary to accommodate specific situations or procedures. Any modifications must comply with all applicable regulations and permits. Keystone will complete site-specific

crossing plans for certain waterbody crossings if required by the applicable regulatory agencies during federal or state permitting processes.

7.2 Easement and Work Space

The permanent easement, temporary work space, additional temporary work space, and any special restrictions shall be depicted on the construction drawings. The work shall be contained within these areas and be limited in size to the minimum required to construct the waterbody crossing.

The Contractor shall locate all extra work areas (such as staging areas and additional spoil storage areas) at least 10 feet from the water's edge if practicable.

At all waterbody crossings, the Contractor shall install flagging across the construction right-of-way at least 10 feet from the water's edge prior to clearing and ensure that riparian cover is maintained where practicable during construction.

7.3 Vehicle Access and Equipment Crossings

The Contractor shall inspect equipment for fluid leaks prior to entering or crossing over waterbodies.

Equipment bridges shall be installed at all flowing waterbodies and as directed by the Keystone EI. Equipment crossings shall be constructed as described in Details 16, 17
and/or 18.

Equipment crossings shall be perpendicular to drainage bottoms wherever possible.

Erosion and sediment control barriers will be installed and maintained around vehicle access points as necessary to prevent sediment from reaching the waterway.

The Contractor shall be responsible for the installation, maintenance, and removal of all temporary access crossings including portable bridges, bridges made from timber or mats, flumes, culverts, sand bags, subsoil, coarse granular material, and riprap.

The Contractor shall ensure that culverts and flumes are sized and installed of sufficient diameter to accommodate the existing flow of water and those that may potentially be created by sudden runoffs. Flumes shall be installed with the inlet and outlet at natural grade if possible.

Where bridges, culverts or flumes are installed across the work area, the Contractor shall be responsible for maintaining them (e.g. preventing collapse, clogging or tilting). All flumes and culverts shall be removed as soon as possible upon completion of construction.

The width of the temporary access road across culverts and flumes and the design of the approaches and ramps shall be adequate for the size of vehicle and equipment access required. The ramps shall be of sufficient depth and constructed to prevent collapse of the flumes, and the approaches on both sides of the flume shall be feathered.

Where culverts are installed for access, the culvert shall be of sufficient length to convey the stream flow through the construction zone.

The Contractor shall maintain equipment bridges to prevent soil from entering the waterbody.

7.4 Waterbody Crossing Methods

Construction methods pertinent to waterbody crossings are presented below. Selection of the most appropriate method at each crossing shall be depicted on the construction drawings but may be amended or changed based on site-specific conditions (i.e., environmental sensitivity of the waterbody, depth, and rate of flow, subsurface soil conditions, and the expected time and duration of construction) at the time of crossing. Construction will involve dry-ditch techniques at crossings where the timing of construction does not adequately protect environmentally sensitive waterbodies, as determined by the appropriate regulatory authority. Where required, horizontal directional drilling (HDD) will be used at designated major and sensitive waterbodies crossings. Each waterbody crossing shall be accomplished using one of the following construction methods:

- Non-flowing Open Cut Crossing Method - (Detail 11)
- Flowing Open Cut Crossing Method – Minor, Intermediate or Major Waterbody - (Detail 12)
- Flowing Stream Crossing – Dry Flume Method - (Detail 13)
- Flowing Stream Crossing – Dry Dam-and-Pump Method - (Detail 14)
- Horizontal Directional Drill Crossing - (Detail 15)
- Horizontal Bore Crossing - (Detail 21)

In conjunction with the appropriate jurisdictional agency, Keystone will develop specific crossing plans for major water bodies that contain recreationally or commercially important fisheries, or are classified as special use. Keystone will consult with state fisheries agencies with respect to applicable construction windows for each crossing and develop specific construction and crossing methods for open cuts in conjunction with USACE permitting and USFWS consultation.

7.4.1 Non-flowing Open Cut Crossing Method

The Contractor shall utilize the Non-flowing Open Cut Crossing Method (Detail 11) for all waterbody crossings (ditches, gullies, drains, swales, etc.) with no perceptible flow at the time of construction. Should site conditions change and the waterbody is flowing at the time of

construction, the Contractor shall install the crossing utilizing the Flowing Open Cut Crossing Method (Detail 12) unless otherwise approved by Keystone.

7.4.2 Flowing Open Cut Crossing Method of Minor, Intermediate, and Major Waterbodies

For minor waterbody crossings, except where the flume method is used, the Contractor shall complete construction in the waterbody (not including blasting, if required) as shown on Detail 12 within 24 hours if practicable.

For intermediate waterbodies, the Contractor shall attempt to complete trenching and backfill work within the waterbody (not including blasting if required) within 48 hours if practicable as shown on Detail 12.

The Contractor shall construct each major waterbody crossing in accordance with a site-specific plan as shown in the construction drawings. The Contractor shall complete in-stream construction activities as expediently as practicable.

7.4.3 Flowing Stream Crossing – Dry Flume Method

Where required, the Contractor shall utilize the Flowing Open Cut Crossing – Dry Flume Method as shown on Detail 13 with the following "dry ditch" techniques:

- Flume pipe shall be installed after blasting (if necessary), but before any trenching.
- Sand bag, sand bag and plastic sheeting diversion structure, or equivalent shall be used to develop an effective seal and to divert stream flow through the flume pipe (some modifications to the stream bottom may be required in order to achieve an effective seal).
- Flume pipe(s) shall be aligned to prevent bank erosion and streambed scour.
- Flume pipe shall not be removed during trenching, pipe laying, or backfilling activities, or initial streambed restoration efforts.
- All flume pipes and dams that are not also part of the equipment bridge shall be removed as soon as final clean up of the stream bed and bank is complete.

7.4.4 Flowing Stream Crossing – Dry Dam-and-Pump Method

Where specified in the construction drawings, the Contractor shall utilize the Flowing Open Cut Crossing – Dry Dam-and-Pump Method as shown on Detail 14. The dam-and-pump crossing method shall meet the following performance criteria:

- sufficient pumps to maintain 1.5 times the flow present in the stream at the time of construction;

- at least one back up pump available on site;
- dams constructed with materials that prevent sediment and other pollutants from entering the waterbody (e.g., sandbags or clean gravel with plastic liner);
- screen pump intakes installed;
- streambed scour prevented at pump discharge; and
- dam and pumps shall be monitored to ensure proper operation throughout the waterbody crossing.

7.4.5 Horizontal Directional Drill Crossings

Where required, the horizontal directional drill method as shown on Detail 15 shall be utilized for designated major and sensitive waterbodies. The Contractor shall construct each directional drill waterbody crossing in accordance with a site specific plan as shown in the construction drawings.

Drilling fluids and additives utilized during implementation of a directional drill shall be non-toxic to the aquatic environment.

The Contractor shall develop a contingency plan to address a frac-out during a directional drill. The plan shall include instructions for monitoring during the directional drill and mitigation in the event that there is a release of drilling fluids. Additionally, the waterbody shall be monitored downstream by the Contractor for any signs of drilling fluid.

The Contractor shall dispose of all drill cuttings and drilling mud as permitted by the appropriate regulatory authority at a Keystone-approved location. Disposal options may include spreading over the construction right-of-way in an upland location approved by Keystone or hauling to an approved licensed landfill or other site approved by Keystone.

7.4.6 Horizontal Bore Crossings

Where required, the horizontal bore method as shown on Detail 21 shall be utilized for crossing waterbodies. The Contractor shall construct each horizontal bore waterbody crossing in accordance with a site specific plan as shown in the construction drawings.

7.5 Clearing

Except where rock is encountered and at non-flowing open cut crossings, all necessary equipment and materials for pipe installation must be on site and assembled prior to commencing trenching in a waterbody. All staging areas for materials and equipment shall be located at least 10 feet from the waterbody edge. The Contractor shall preserve as much vegetation as possible along the waterbody banks while allowing for safe equipment operation.

Clearing and grubbing for temporary vehicle access and equipment crossings shall be carefully controlled to minimize sediment entering the waterbody from the construction right-of-way.

Clearing and grading shall be performed on both sides of the waterbody prior to initiating any trenching work. All trees shall be felled away from watercourses.

Plant debris or soil inadvertently deposited within the high water mark of waterbodies shall be promptly removed in a manner that minimizes disturbance of the waterbody bed and bank. Excess floatable debris shall be removed above the high water mark from areas immediately above crossings.

Vegetation adjacent to waterbody crossings by horizontal directional drill or boring methods shall not be disturbed except by hand clearing as necessary for drilling operations.

7.6 Grading

The construction right-of-way adjacent to the waterbody shall be graded so that soil is pushed away from the waterbody rather than towards it whenever possible.

In order to minimize disturbance to woody riparian vegetation within extra workspaces adjacent to the construction right-of-way at waterbody crossings, the Contractor shall minimize grading and grubbing of waterbody banks. To the extent practicable, grubbing shall be limited to the ditch line plus an appropriate width to accommodate safe vehicle access and the crossing.

7.7 Temporary Erosion and Sediment Control

The Contractor shall install and maintain sediment barriers across the entire construction right-of-way at all flowing waterbody crossings.

The Contractor shall install sediment barriers immediately after initial disturbance of the waterbody or adjacent upland. Sediment barriers must be properly maintained throughout construction and reinstalled as necessary (such as after backfilling of the trench) until replaced by permanent erosion controls or restoration of adjacent upland areas is complete.

Where waterbodies are adjacent to the construction right-of-way, the Contractor shall install and maintain sediment barriers along the edge of the construction right-of-way as necessary to contain spoil and sediment within the construction right-of-way.

7.8 Trenching

The following requirements apply to all waterbody crossings except those being installed by the non-flowing open cut crossing method.

All equipment and materials shall be on site before trenching in the active channel of all minor waterbodies containing state-designated fisheries, and in

intermediate and major waterbodies. All activities shall proceed in an orderly manner without delays until the trench is backfilled and the stream banks stabilized. The Contractor shall not begin in-stream activity until the in-stream pipe section is complete and ready to be installed in the waterbody.

The Contractor shall use trench plugs at the end of the excavated trench to prevent the diversion of water into upland portions of the pipeline trench and to keep any accumulated upland trench water out of the waterbody. Trench plugs must be of sufficient size to withstand upslope water pressure.

The Contractor shall conduct as many in-stream activities as possible from the banks of the waterbodies. The Contractor shall limit the use of equipment operating in waterbodies to that needed to construct each crossing.

The Contractor shall place all spoil from minor and intermediate waterbody crossings and upland spoil from major waterbody crossings in the construction right-of-way at least 10 feet from the water's edge or in additional extra work areas. No trench spoil, including spoil from the portion of the trench across the stream channel, shall be stored within a waterbody unless the crossing cannot be reasonably completed without doing so.

The Contractor shall install and maintain sediment barriers around spoil piles to prevent the flow of spoil into the waterbody.

Spoil removed during ditching shall be used to backfill the trench usually with a backhoe, clamshell, or a dragline working from the waterbody bank. Sand, gravel, rockshield, or fill padding shall be placed around the pipe where rock is present in the channel bottom.

7.9 Pipe Installation

The following requirements apply to all waterbody crossings except those being installed by the non-flowing open cut crossing method.

A "free stress" pipe profile shall be used at all minor, intermediate, and major waterbodies with gradually sloping stream banks. The "box bend" pipe profile may be used for intermittent and major waterbodies with steep stream banks.

The trench shall be closely inspected to confirm that the specified cover and adequate bottom support can be achieved, and shall require Keystone approval prior to the pipe being installed. Such inspections shall be performed by visual inspection and/or measurement by a Keystone representative. In rock trench, the ditch shall be adequately padded with clean granular material to provide continuous support for the pipe.

The pipe shall be pulled into position or lowered into the trench and shall, where necessary, be held down by suitable negative buoyancy control, as-built recorded and backfilled immediately to prevent the pipe from floating.

The Contractor shall provide sufficient approved lifting equipment to perform the pipe installation in a safe and efficient manner. As the coated pipe is lowered in,

it shall be prevented from swinging or rubbing against the sides of the trench. Only properly manufactured slings, belts, and cradles suitable for handling coated pipe shall be used. All pipes shall be inspected for coating flaws and/or damage as it is being lowered into the trench. Any damage to the pipe or coating shall be repaired.

7.10 Backfilling

The following requirements apply to all waterbody crossings except those being installed by the non-flowing open cut crossing method.

Trench spoil excavated from waterbodies shall be used to backfill the trench across waterbodies.

After lowering in is complete, but before backfilling, the line shall be re-inspected to ensure that no skids, brush, stumps, trees, boulders, or other debris is in the trench. If discovered, such materials or debris shall be removed from the trench prior to backfilling.

For each major waterbody crossed, the Contractor shall install a trench breaker at the base of slopes near the waterbody unless otherwise directed by Keystone based on site specific conditions. The base of slopes at intermittent waterbodies shall be assessed on site and trench breakers installed only where necessary.

Slurred muck or debris shall not be used for backfill. At locations where the excavated native material is not acceptable for backfill or must be supplemented, the Contractor shall provide granular material approved by Keystone.

If specified in the construction drawings, the top of the backfill in the stream shall be armored with rock riprap or bio-stabilization materials as appropriate.

7.11 Stabilization and Restoration of Stream Banks and Slopes

The Contractor will restore the contours of the bed and banks of all waterways immediately after pipe installation and backfill, except over the travel lane. Travel lanes and bridges may stay in place until hydrostatic testing and cleanup are complete. All materials used to support construction activities will be removed from waterbodies and wetlands, including, but not limited to, flumes, mats, plastic sheeting, and sandbags.

The stream bank contour shall be re-established. All debris shall be removed from the streambed and banks. Stream banks shall be stabilized and temporary sediment barriers shall be installed within 24 hours of completing the crossing if practicable.

Approach slopes shall be graded to an acceptable slope for the particular soil type and surface run off controlled by installation of permanent slope breakers. Where considered necessary, the integrity of the slope breakers shall be ensured by lining with erosion control blankets.

Immediately following reconstruction of the stream banks, the Contractor shall install seed and flexible channel liners on waterbody banks as shown in Detail 19.

If the original stream bank is excessively steep and unstable or flow conditions are severe, or if specified on the construction drawings, the banks shall be stabilized with rock riprap, gabions, stabilizing cribs, or bio-stabilization measures to protect backfill prior to reestablishing vegetation.

Stream bank riprap structures shall consist of a layer of stone, underlain with approved filter fabric or a gravel filter blanket in accordance with Detail 20. Riprap shall extend from the stabilized streambed to the top of the stream bank. Where practicable, native rock shall be utilized.

Bio-stabilization techniques which may be considered for specific crossings are shown in Details 23 and 24.

The Contractor shall remove equipment bridges as soon as possible after final clean up.

8.0 HYDROSTATIC TESTING

8.1 Testing Equipment Location

The Contractor shall provide for the safety of all pipeline construction personnel and the general public during hydrostatic test operations by placing warning signs in populated areas.

The Contractor shall locate hydrostatic test manifolds 100 feet outside wetlands and riparian areas to the maximum extent practicable.

8.2 Test Water Source and Discharge Locations

Keystone is responsible for acquiring all permits required by federal, state and local agencies for procurement of water and for the discharge of water used in the hydrostatic testing operation. Keystone shall provide the Contractor with a copy of the appropriate withdrawal/discharge permits for hydrostatic test water. The Contractor shall keep water withdrawal/discharge permits on site at all times during testing operations.

Any water obtained or discharged shall be in compliance with permit notice requirements and with sufficient notice for Keystone's Testing Inspector to make water sample arrangements prior to obtaining or discharging water. Keystone will obtain water samples for analysis from each source before filling the pipeline. In addition, water samples will be taken prior to discharge of the water, as required by state and federal permits.

In some instances sufficient quantities of water may not be available from the permitted water sources at the time of testing. Withdrawal rates may be limited as stated by the permit. Under no circumstances shall an alternate water source be used without prior authorization from Keystone.

The Contractor shall be responsible for obtaining any required water analyses from each source to be used in sufficient time to have a lab analysis performed prior to any filling operations. The sample bottle shall be sterilized prior to filling with the water sample. The analysis shall determine the pH value and total suspended solids. Each bottle shall be marked with:

- source of water with pipeline station number;
- date taken;
- laboratory order number; and
- name of person taking sample.

Staging/work areas for filling the pipeline with water will be located a minimum of 100 feet from the waterbody or wetland boundary if topographic conditions permit. The Contractor will install temporary sediment filter devices adjacent to all streams to prevent sediments from leaving the construction site.

The Contractor shall screen the intake hose to prevent the entrainment of fish or debris. The hose shall be kept at least 1 foot off the bottom of the waterbody. Refueling of construction equipment shall be conducted a minimum distance of 100 feet from the stream or a wetland. Pumps used for hydrostatic testing within 100 feet of any waterbody or wetland shall be operated and refueled in accordance with Section 3.

During hydrostatic test water withdrawals, the Contractor will maintain adequate flow rates in the waterbody to protect aquatic life and provide for downstream uses, in compliance with regulatory and permit requirements.

The Contractor shall not use chemicals in the test water. The Contractor shall not discharge any water containing oil or other substances that are in sufficient amounts as to create a visible color film or sheen on the surface of the receiving water.

Selected road, railroad, and river crossing pipe sections may be specified to be pre-tested for a minimum of 4 hours. The water for pre-testing of any road and railroad crossings shall be hauled by a tanker truck from an approved water source. Water for pre-testing of a river crossing may be hauled or taken from the respective river if it is an approved water source. Since the volume of water utilized in these pre-tests shall be relatively small, the water shall be discharged overland along the construction right-of-way and allowed to soak into the ground utilizing erosion and sediment control mitigative measures.

Selection of final test water sources will be determined based on site conditions at the time of construction and applicable permits.

8.3 Filling the Pipeline

After final positioning of the pipe, the Contractor shall fill the pipe with water. Pipe ends shall not be restrained during the fill. The fill pump shall be set on a metal catch pan of sufficient dimensions to contain all leaking lubricants or fuel and prevent them from entering the water source. The suction inlet must be placed in a screened enclosure located at a depth that shall not allow air to be drawn in with the water. The screened enclosure shall be such that the fill water is free of organic or particulate matter.

The Contractor shall provide a filter of the back flushing or cartridge type with a means of cleaning without disconnecting the piping. The filter shall have the specifications of 100 mesh screen. If the cartridge type is used, a sufficient quantity of cartridges shall be on hand at the filter location. The Contractor shall install the filter between the fill pump and the test header. The Contractor shall be responsible for keeping the back flush valve on the filter closed during the filling operation. The Contractor shall be responsible for the proper disposal of materials back flushed from the filter or filter cartridges. The Contractor shall not be allowed to back flush the filter into the stream or other water source.

During water-filling of the pipeline, the Contractor shall employ fill pumps capable of injecting water into the pipeline at a maximum rate of approximately 0.7 to 1.0 mile per hour, except as limited by permits or the maintenance of adequate flow rates in the waterbody, as follows:

Nominal OD	Max GPM
36”	3000

The Contractor shall maintain flow rates as necessary to protect aquatic life, provide for all waterbody uses, and provide for downstream withdrawals of water by existing users.

In areas where zebra mussels are known to occur, all equipment used during the hydrostatic test withdrawal and discharge will be thoroughly cleaned before being used at subsequent hydrostatic test locations to prevent the transfer of zebra mussels or their larvae (veligers) to new locations.

8.4 Dewatering the Pipeline

The Contractor shall comply with state-issued NPDES permits for discharging test water.

The Contractor shall not discharge any water containing oil or other substances that are in sufficient amounts as to create a visible color film on the surface of the receiving water.

The Contractor shall not discharge into state-designated exceptional value waters, waterbodies which provide habitat for federally listed threatened or endangered species, or waterbodies designated as public water supplies, unless appropriate federal, state, and local permitting agencies grant written permission.

To avoid impacts from introduced species, no inter-basin transfers (discharge) of hydrostatic test water will occur.

The discharge operation will be monitored and water samples will be taken prior to the beginning of the discharge to ensure that it complies with the Project and permit requirements. If required by state permits, additional water quality testing will be conducted during discharge, in accordance with permit conditions.

The Contractor shall calculate, record, and provide to Keystone the day, date, time, location, total volume, maximum rate, and methods of all water discharged to the ground or to surface water in association with hydrostatic testing.

The Contractor shall regulate the pig velocity discharge rate (3000 gpm maximum), use energy dissipation devices, and install sediment barriers, as necessary, to prevent erosion, streambed scour, suspension of sediments, or excessive stream flow. Water must be disposed of using good engineering judgment so that all federal, state, and local environmental standards are met. Dewatering lines shall be of sufficient strength and be securely supported and tied down at the discharge end to prevent whipping during this operation.

To reduce the velocity of the discharge, The Contractor shall utilize an energy-dissipating device described as follows:

8.4.1 Splash Pup

A splash pup consists of a piece of large diameter pipe (usually over 20" outside diameter) of variable length with both ends partially blocked that is welded perpendicularly to the discharge pipe. As the discharge hits against the inside wall of the pup, the velocity is rapidly reduced and the water is allowed to flow out either end. A variation of the splash pup concept, commonly called a diffuser, incorporates the same design, but with capped ends and numerous holes punched in the pup to diffuse the energy.

8.4.2 Splash Plate

The splash plate is a quarter section of 36-inch pipe welded to a flat plate and attached to the end of a 6-inch discharge pipe. The velocity is reduced by directing the discharge stream into the air as it exits the pipe. This device is also effective for most overland discharge.

8.4.3 Plastic Liner

In areas where highly erodible soils exist or in any low flow drainage channel, it is a common practice to use layers of Visqueen (or any of the new construction fabrics currently available) to line the receiving channel for a short distance. One anchoring method may consist of a small load of rocks to keep the fabric in place during the discharge. Additional best management practices, such as the use of plastic sheeting or other material to prevent scour, will be used as necessary to prevent excessive sedimentation during dewatering.

8.4.4 Straw Bale Dewatering Structure

Straw bale dewatering structures are designed to dissipate and remove sediment from the water being discharged. Straw bale structures are used for on land discharge of wash water and hydrostatic test water and in combination with other energy dissipating devices for high volume discharges. A straw bale dewatering structure is shown In Detail 6. A dewatering filter bags may be sued as an alternative to show bale dewatering structures. A dewatering filter bag is shown in Detail 5.

THESE ARE TYPICAL DRAWINGS; ACTUAL SITE CONDITIONS MAY VARY FROM THE SITE GRAPHICALLY REPRESENTED.

Typical Drawing Index

Detail 1	Typical Silt Fence Barrier
Detail 2	Typical Straw or Hay Bail Barrier
Detail 3	Temporary/Permanent Slope Breaker Detail (Water Bars)
Detail 4	Erosion Control Matting Installation
Detail 5	Typical Dewatering Filter Bag
Detail 6	Typical Straw Bale Dewatering Structure
Detail 7	Typical Permanent Trench Breakers
Detail 8	"Dry" Wetland Crossing Method
Detail 9	Standard Wetland Crossing Method
Detail 10	Push/Pull Wetland Crossing Method
Detail 11	Typical Open Cut Wet Crossing Method Non-Flowing Waterbody
Detail 12	Typical Open Cut Wet Crossing Method Flowing Waterbody
Detail 12a	Typical Open Cut Wet Crossing Method Flowing Waterbody - Construction Procedures
Detail 13	Typical Dry Flume Crossing Method
Detail 13a	Typical Dry Flume Crossing Method - Construction Procedures
Detail 14	Typical Dam and Pump Crossing
Detail 14a	Typical Dam and Pump Crossing - Construction Procedures
Detail 15	Typical Horizontal Drill (HDD) Site Plan & Profile
Detail 16	Typical Temporary Bridge Crossing
Detail 16a	Typical Temporary Bridge Crossing - Construction Procedures
Detail 17	Typical Flume Bridge Crossing
Detail 18	Typical Railcar Bridge Crossing
Detail 18a	Typical Railcar Bridge Crossing - Construction Procedures
Detail 19	Flexible Channel Liner Installation
Detail 20	Typical Rock Rip-Rap
Detail 21	Typical Road Bore Crossing
Detail 22	Streambank Reclamation - Brush Layer in Cross Cut Slope
Detail 23	Streambank Reclamation - Log Wall
Detail 24	Streambank Reclamation - Vegetated Geotextile Installation
Detail 25	Typical ROW Layout/Soil Handling
Detail 26	Header/Main Crossovers of Pipeline
Detail 27	Relocate/Replace Drainage Header/Main
Detail 28	Temporary Drain Tile Repair
Detail 29	Permanent Repair Method of Drain Tiles
Detail 30	Equipment Cleaning Station Detail
Detail 31	Equipment Wash Station Detail
Detail 67	Topsoil Conservation Ditch & Spoil Stripping Triple Ditch
Detail 67A	Topsoil Conservation Ditch & Spoil Stripping Triple Ditch

NOTE: **The following typical drawings are included for ease of reference.**

- Details 1 through 31 can be found in the Construction Mitigation and Reclamation Plan

REVISIONS
01 2008-11-05 REVISED TITLES, ADDED/DEL. DETAILS
02 2010-10-08 REVISED TITLES
03 2010-10-11 REVISED TITLE BLOCK

TransCanada
In business to deliver

exp Energy Services Inc.
t: +1.850.385.5441 | f: +1.850.385.5523
1300 Metropolitan Blvd
Tallahassee, FL 32308
USA
www.exp.com
The new identity of Trow Engineering Consultants, Inc.

DESIGNER: JMP (NAME) 2010-10-21 (DATE)

CHECKED BY: WSF

DESIGN CHECKER: RW P7100

KEYSTONE XL PROJECT

FIA # 4359 | CHAINAGE: | DISCIPLINE # 03

TITLE: DETAIL INDEX

SCALE: N.T.S. | DWG No 4359-03-ML-00-700 | REV 03

TC_A4_BR.DWG 8.5X11

CADD DRAWING: DO NOT MAKE MANUAL REVISIONS

THESE ARE TYPICAL DRAWINGS; ACTUAL SITE CONDITIONS MAY VARY FROM THE SITE GRAPHICALLY REPRESENTED.

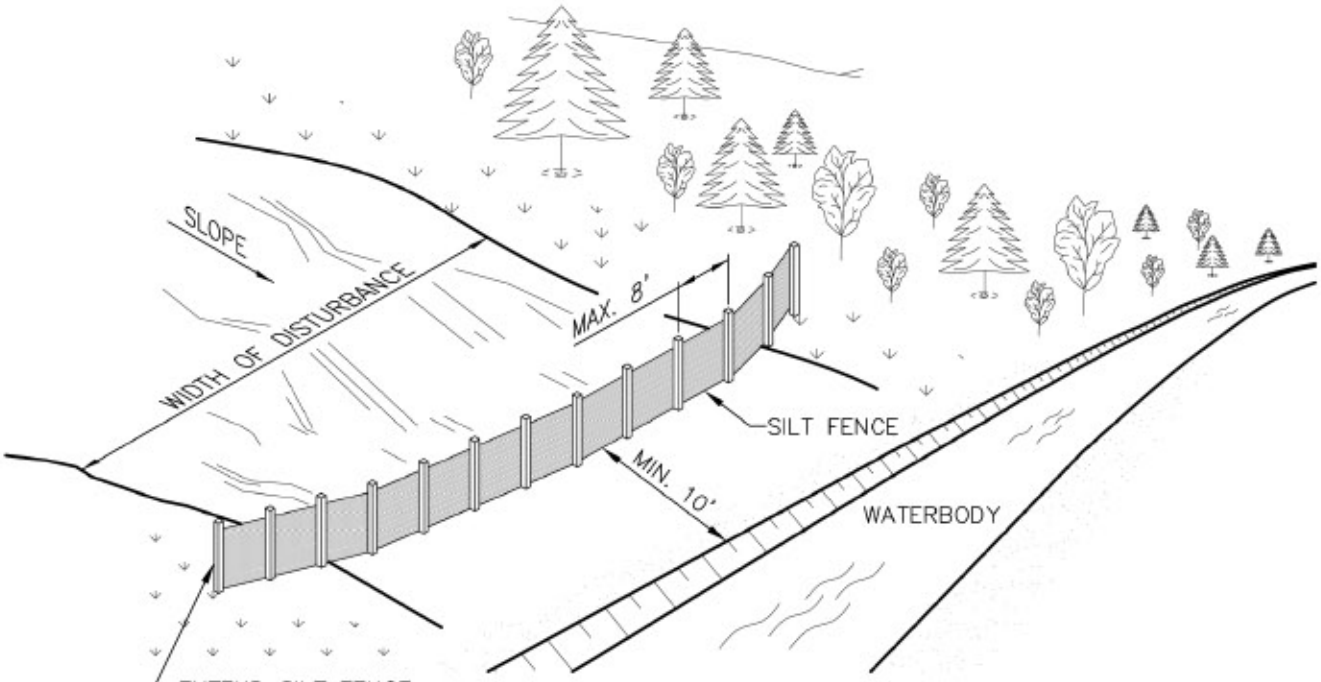

PLAN

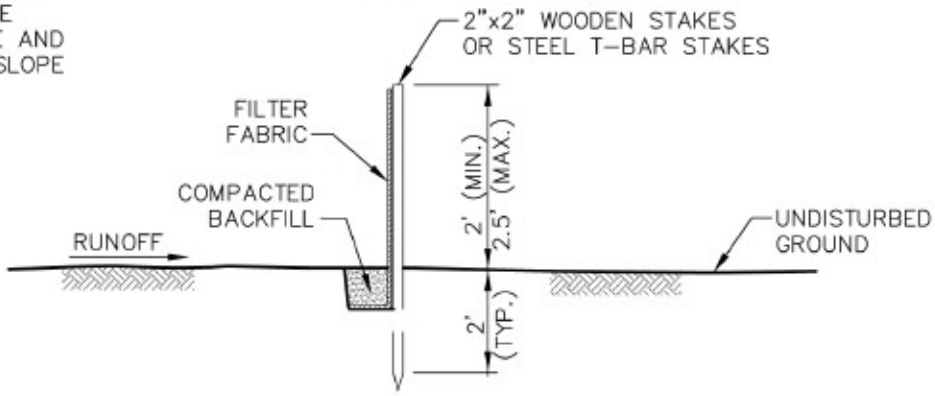

SECTION "A–A"

NOTES:

1. MATERIAL SHOULD BE WOVEN GEOTEXTILE FABRIC SUCH AS EXXON GTF 180 OR MIRAFI 600X, OR AN APPROVED EQUIVALENT. SECONDARY REINFORCEMENT, SUCH AS A CONSTRUCTION BARRIER FENCE OR WIRE MESH CAN ALSO BE USED BEHIND THE FILTER FABRIC.
2. SILT FENCE TO BE REINFORCED WITH 2"x2" WOODEN STAKES OR STEEL T-BAR STAKES PLACED EVERY 8' OR CLOSER AS CONDITIONS REQUIRE.
3. ATTACH FILTER FABRIC AT EACH POST AT A MINIMUM OF 3 LOCATIONS.
4. THE FILTER FABRIC MINIMUM LENGTH OF 1' IS TO BE ANCHORED IN A TRENCH WITH WELL COMPACTED BACKFILL OVER THE FABRIC TO PREVENT UNDERMINING.
5. TO ELIMINATE POSSIBLE END FLOW, BOTH ENDS OF THE SILT FENCE SHALL BE TURNED AND EXTENDED UPSLOPE.
6. SILT FENCES ARE TO BE CHECKED AND MAINTAINED ON A REGULAR BASIS. REMOVE ANY BUILD-UP OF SEDIMENT. REPLACE DAMAGED OR INEFFECTIVE SILT FENCE AS SOON AS POSSIBLE.
7. WHERE ANCHORING CONDITIONS FOR THE SILT FENCE ARE POOR, PLACE STRAW BALES ON DOWNSTREAM SIDE OF THE SILT FENCE.
8. INSTALLATION TO BE MODIFIED BY THE PROJECT AS NECESSARY TO SUIT ACTUAL SITE CONDITIONS.

REVISIONS
01 2008-11-04 UPDATED DRAWING NOTES
02 2010-10-08 UPDATED DRAWING NOTES
03 2010-10-11 REVISED TITLE BLOCK

TransCanada
In business to deliver

exp Energy Services Inc.
t: +1.850.385.5441 | f: +1.850.385.5523
1300 Metropolitan Blvd
Tallahassee, FL 32308
USA
www.exp.com

DESIGNER:		KEYSTONE XL PROJECT		
JMP (NAME)	2010-10-21 (DATE)	FIA # 4359	CHAINAGE:	DISCIPLINE # 03
		TITLE: DETAIL 1 TYPICAL SILT FENCE BARRIER		
CHECKED BY: WSF	DESIGN CHECKER: RW P7100	SCALE N.T.S.	DWG No 4359-03-ML-05-701	REV 03

TC_A4_BR.DWG 8.5X11

CADD DRAWING: DO NOT MAKE MANUAL REVISIONS

THESE ARE TYPICAL DRAWINGS; ACTUAL SITE CONDITIONS MAY VARY FROM THE SITE GRAPHICALLY REPRESENTED.

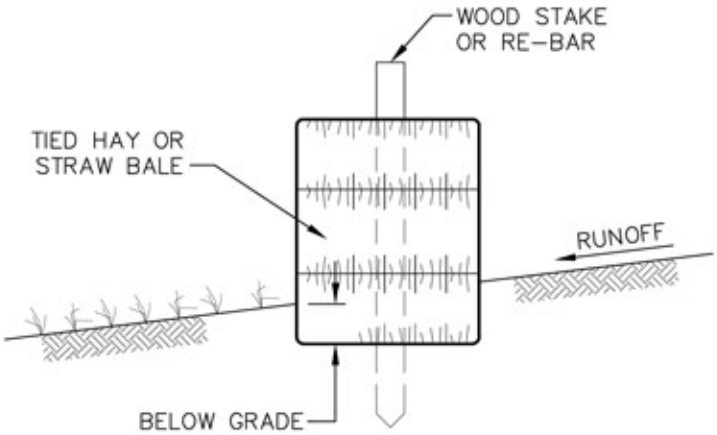

SECTION

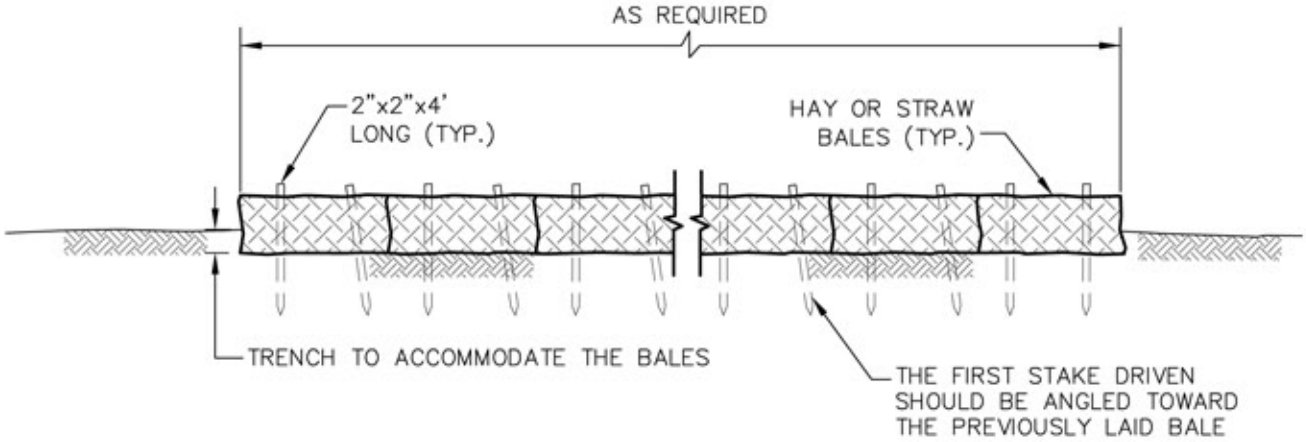

SECTION

NOTES:

1. TO ELIMINATE POSSIBLE END FLOW, BOTH ENDS OF THE STRAW BALE BARRIER SHOULD BE TURNED AND EXTENDED UPSLOPE.
2. EACH BALE SHOULD BE SECURED BY AT LEAST 2 STAKES. THE FIRST STAKE IN EACH BALE SHALL BE DRIVEN TOWARD THE PREVIOUSLY LAID BALE TO FORCE THE BALES TOGETHER. ANY GAPS CAN BE FILLED IN BY WEDGING LOOSE STRAW BETWEEN THE BALES. STAKES SHOULD BE DRIVEN. REBAR OR STANDARD "T" OR "U" STEEL POSTS CAN BE USED AS STAKES, BUT IT SHOULD BE NOTED THAT THEY MAY POSE A HAZARD TO EQUIPMENT IF THE BALES DISINTEGRATE.
3. COMPACT THE EXCAVATED SOIL AGAINST THE UPHILL SIDE OF THE BARRIER TO PREVENT PIPING.
4. STRAW OR HAY BALE BARRIERS REQUIRE CONTINUAL MAINTENANCE TO REMOVE COLLECTED SEDIMENT AND REPLACE DAMAGED BALES AS SOON AS POSSIBLE. PAY CLOSE ATTENTION TO THE REPAIR OF DAMAGED BALES, END RUNS AND UNDERCUTTING BENEATH BALES.
5. INSTALLATION TO BE MODIFIED BY THE PROJECT AS NECESSARY TO SUIT ACTUAL SITE CONDITIONS.

REVISIONS
01 2008-11-04 UPDATED DRAWING NOTES
02 2010-10-08 UPDATED DRAWING NOTES
03 2010-10-11 UPDATED DRAWING NOTES

TransCanada
In business to deliver

exp Energy Services Inc.
t: +1.850.385.5441 | f: +1.850.385.5523
1300 Metropolitan Blvd
Tallahassee, FL 32308
USA
www.exp.com

DESIGNER: JMP (NAME) 2010-10-21 (DATE)	KEYSTONE XL PROJECT		
	FIA # 4359	CHAINAGE:	DISCIPLINE # 03
	TITLE: DETAIL 2 TYPICAL STRAW OR HAY BALE BARRIER		
CHECKED BY: WSF / DESIGN CHECKER: RW P7100	SCALE N.T.S.	DWG No 4359-03-ML-05-702	REV 03

TC_A4_BR.DWG 8.5X11

CADD DRAWING: DO NOT MAKE MANUAL REVISIONS

THESE ARE TYPICAL DRAWINGS; ACTUAL SITE CONDITIONS MAY VARY FROM THE SITE GRAPHICALLY REPRESENTED.

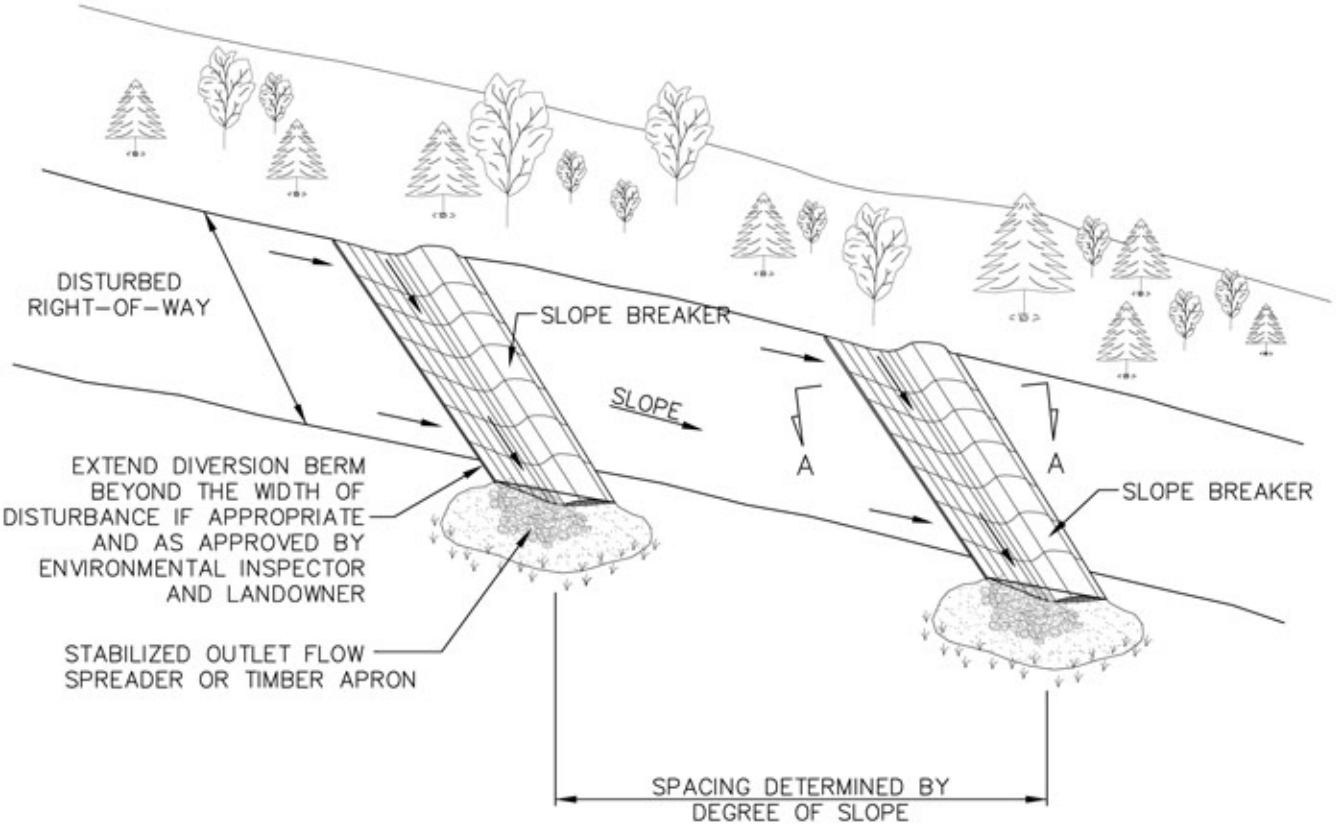

PLAN

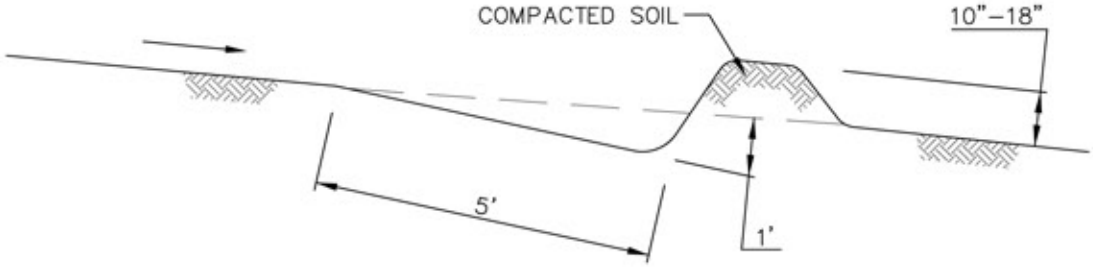

NOTES:

1. PERMANENT SLOPE BREAKERS TO PROVIDE POSITIVE DRAINAGE TO A STABILIZED OUTLET.
2. INSTALLATION SPECIFICATIONS TO BE MODIFIED BY THE PROJECT AS NECESSARY TO SUIT ACTUAL SITE CONDITIONS.
3. THE CONTRACTOR SHALL INSTALL TEMPORARY AND PERMANENT SLOPE BREAKERS ON SLOPES GREATER THAN APPROXIMATELY 5% ON ALL DISTURBED LANDS AT THE FOLLOWING RECOMMENDED SPACING:

SLOPE (%)	SPACING (FEET)
5-15	300
>15-30	200
>30	100

REVISIONS
01 2008-11-04 MODIFIED DRAWING NOTES
02 2010-10-08 UPDATED DRAWING NOTES
03 2010-10-11 REVISED TITLE BLOCK

TransCanada
In business to deliver

exp Energy Services Inc.
t: +1.850.385.5441 | f: +1.850.385.5523
1300 Metropolitan Blvd
Tallahassee, FL 32308
USA
www.exp.com

DESIGNER: JMP (NAME) 2010-10-21 (DATE)

CHECKED BY: WSF

DESIGN CHECKER: RW

P7100

KEYSTONE XL PROJECT

FIA # 4359 | CHAINAGE: | DISCIPLINE # 03

TITLE: DETAIL 3
TEMPORARY/PERMANENT SLOPE BREAKER DETAIL
(WATER BARS)

SCALE: N.T.S. | DWG No: 4359-03-ML-05-703 | REV: 03

TC_A4_BR.DWG 8.5X11

CADD DRAWING: DO NOT MAKE MANUAL REVISIONS

THESE ARE TYPICAL DRAWINGS; ACTUAL SITE CONDITIONS MAY VARY FROM THE SITE GRAPHICALLY REPRESENTED.

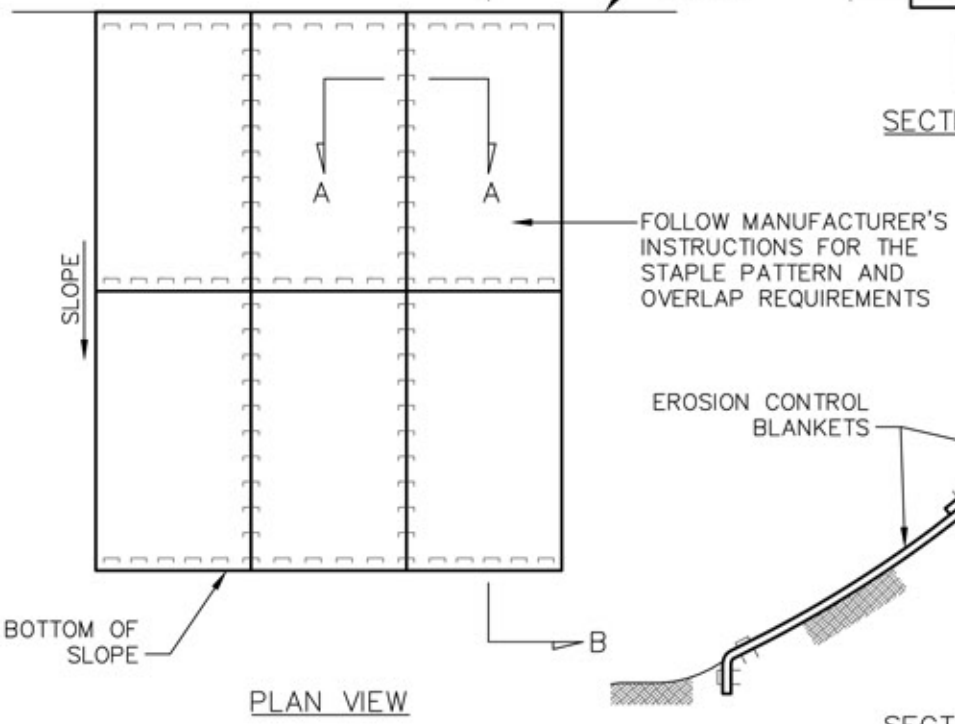

PLAN VIEW

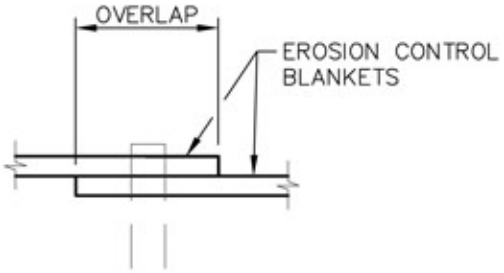

SECTION A–A

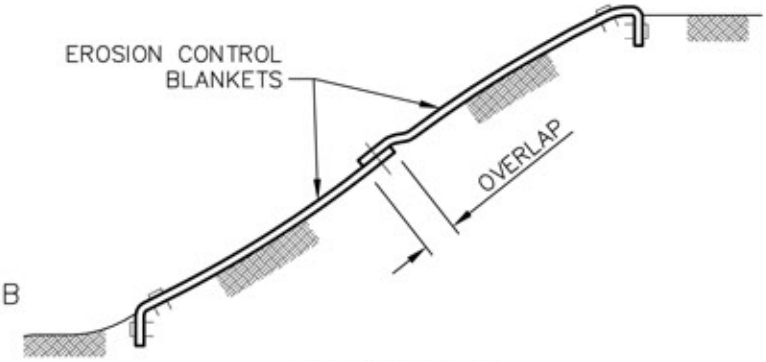

SECTION B–B

NOTES:

1. INSTALL MATTING IN ACCORDANCE WITH MANUFACTURER'S INSTRUCTIONS.
2. PREPARE SOIL BEFORE INSTALLING MATTING, INCLUDING GRADING, REMOVAL OF LARGE ROCKS AND DEBRIS, AND THE APPLICATION OF SEED AND FERTILIZER IF NOT USING PRE–SEEDED MATTING.
3. EROSION CONTROL MATTING SHALL EXTEND COMPLETELY ACROSS DISTURBED AREAS TO PROTECT ERODIBLE SURFACES.
4. BEGIN AT THE TOP OF THE SLOPE BY ANCHORING THE MATTING IN A TRENCH. BACKFILL AND COMPACT THE TRENCH AFTER STAPLING.
5. ROLL THE MATTING DOWN THE SLOPE IN THE DIRECTION OF THE WATER FLOW.
6. AS AN ALTERNATIVE TO STAPLES, WOODEN STAKES OR BIO–DEGRADEABLE PINS CAN BE USED WHERE SPECIFIED BY THE COMPANY.
7. ENSURE COMPLETE CONTACT BETWEEN THE MATTING AND THE SLOPE FACE. ADDITIONAL STAPLES CAN BE USE TO ELIMINATE GAPS.
8. INSTALLATION SPECIFICATIONS TO BE MODIFIED BY THE PROJECT AS NECESSARY TO SUIT ACTUAL SITE CONDITIONS.

REVISIONS
01 2008–11–04 MODIFIED DRAWING NOTES
02 2010–10–08 UPDATED DRAWING NOTES
03 2010–10–11 REVISED TITLE BLOCK

TransCanada
In business to deliver

exp Energy Services Inc.
t: +1.850.385.5441 | f: +1.850.385.5523
1300 Metropolitan Blvd
Tallahassee, FL 32308
USA
www.exp.com

DESIGNER: JMP (NAME) 2010–10–21 (DATE)	KEYSTONE XL PROJECT		
	FIA # 4359	CHAINAGE:	DISCIPLINE # 03
	TITLE: DETAIL 4 EROSION CONTROL MATTING INSTALLATION		
CHECKED BY: WSF / DESIGN CHECKER: RW P7100	SCALE N.T.S.	DWG No 4359–03–ML–05–704	REV 03

TC_A4_BR.DWG 8.5X11

CADD DRAWING: DO NOT MAKE MANUAL REVISIONS

THESE ARE TYPICAL DRAWINGS; ACTUAL SITE CONDITIONS MAY VARY FROM THE SITE GRAPHICALLY REPRESENTED.

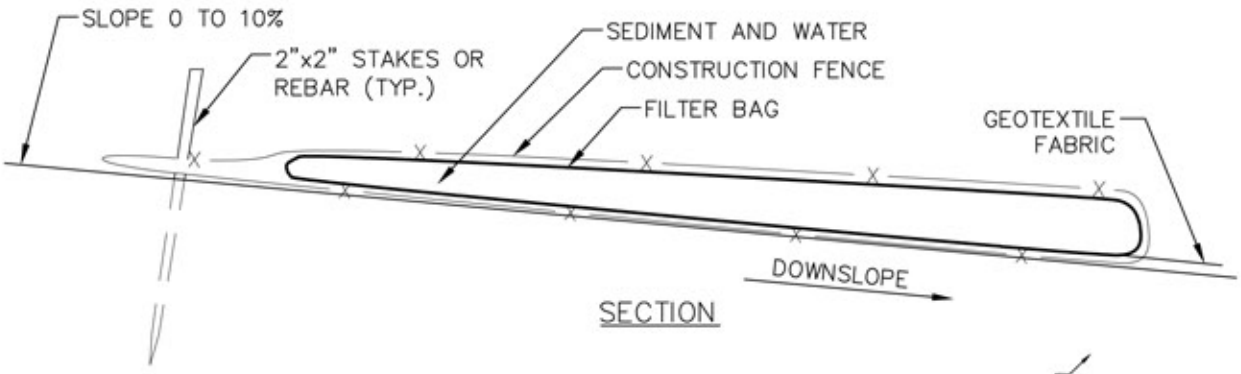

SECTION

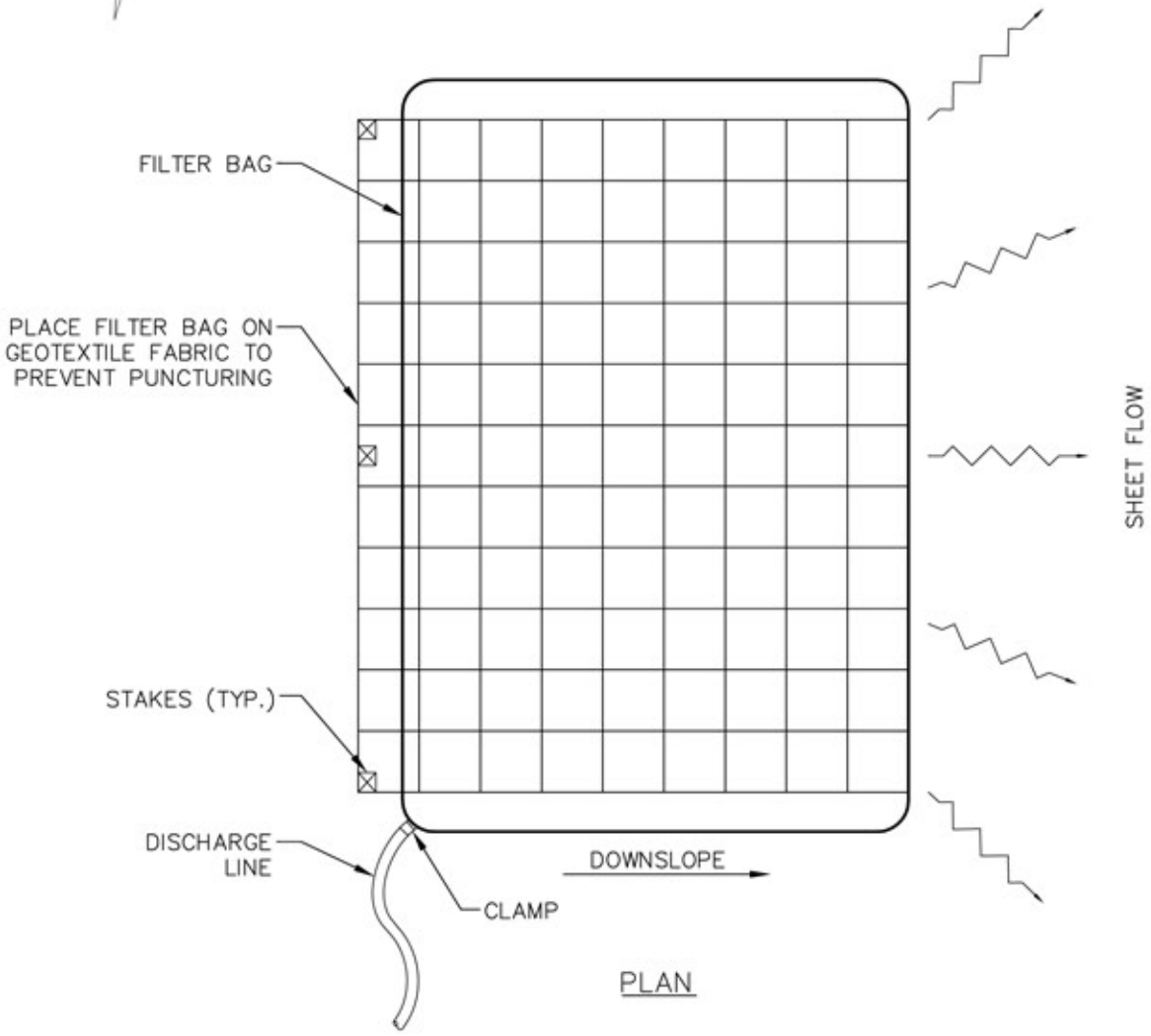

PLAN

NOTES:

1. MANUFACTURED NONWOVEN (FELT) FILTER BAGS ARE A SUITABLE ALTERNATIVE TO STRAW BALE STRUCTURES FOR TRENCH DEWATERING. FILTER BAGS SHALL BE INSTALLED AS SPECIFIED BY THE MANUFACTURER.
2. INSTALLATION SPECIFICATIONS TO BE MODIFIED AS NECESSARY TO SUIT ACTUAL SITE CONDITIONS.

REVISIONS
01 2008-11-04 MODIFIED DRAWING NOTES
02 2010-10-11 REVISED TITLE BLOCK

TransCanada
In business to deliver

exp Energy Services Inc.
t: +1.850.385.5441 | f: +1.850.385.5523
1300 Metropolitan Blvd
Tallahassee, FL 32308
USA
www.exp.com

DESIGNER: JMP (NAME) 2010-10-21 (DATE)

CHECKED BY: WSF
DESIGN CHECKER: RW P7100

KEYSTONE XL PROJECT

FIA # 4359 | CHAINAGE: | DISCIPLINE # 03

TITLE
DETAIL 5
TYPICAL DEWATERING FILTER BAG

SCALE N.T.S. | DWG No 4359-03-ML-05-705 | REV 02

TC_A4_BR.DWG 8.5X11

CADD DRAWING: DO NOT MAKE MANUAL REVISIONS

THESE ARE TYPICAL DRAWINGS; ACTUAL SITE CONDITIONS MAY VARY FROM THE SITE GRAPHICALLY REPRESENTED.

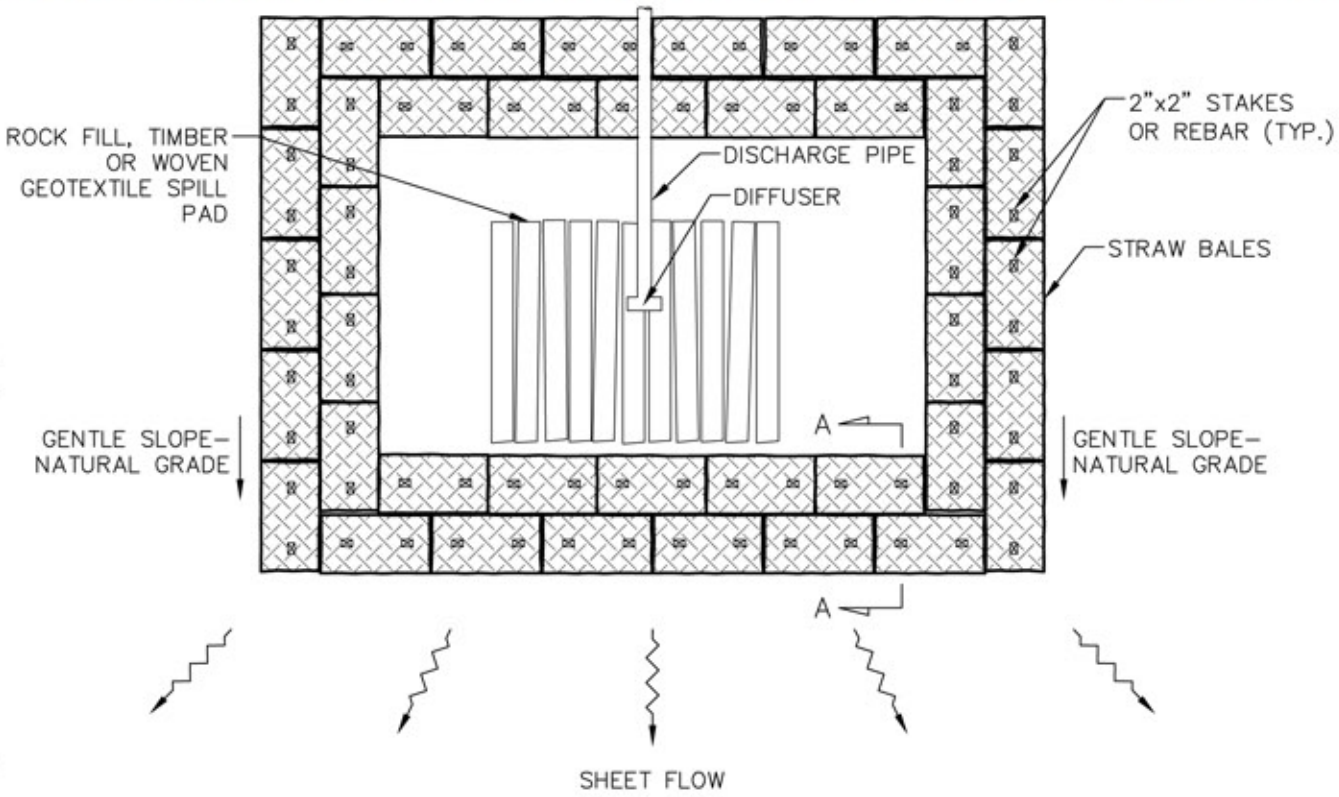

PLAN

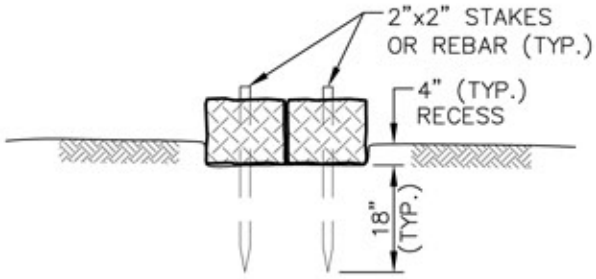

SECTION A–A

NOTES:

1. INSTALL A STRAW BALE DEWATERING STRUCTURE WHEREVER IT IS NECESSARY AND AS DIRECTED BY THE ENVIRONMENTAL INSPECTOR TO PREVENT THE FLOW OF HEAVILY SILT LADEN WATER INTO WATERBODIES OR WETLANDS.
2. DISCHARGE SITE SHOULD BE WELL VEGETATED AND LOCATED AT LEAST 50 FEET FROM ANY WATERBODY. THE TOPOGRAPHY OF THE SITE SHOULD BE SUCH THAT WATER WILL FLOW INTO THE DEWATERING STRUCTURE AND AWAY FROM ANY WORK AREAS. THE AREA DOWNSLOPE FROM THE DEWATERING SITE MUST BE REASONABLY FLAT OR STABILIZED BY VEGETATION OR OTHER MEANS TO ALLOW THE FILTERED WATER TO CONTINUE AS SHEET FLOW.
3. DIRECT THE PUMPED WATER ONTO A STABLE SPILL PAD CONSTRUCTED OF ROCKFILL, WEIGHTED TIMBERS, OR A WOVEN GEOTEXTILE STAKED TO THE GROUND SURFACE, SUCH AS MIRAFI 600X, TERRAFIX 400W, OR A COMPANY APPROVED EQUIVALENT. BEYOND THE SPILL PAD FORCE THE DISCHARGE WATER INTO SHEET FLOW USING STRAW BALES AND THE NATURAL TOPOGRAPHY.
4. DISCHARGE RATES SHOULD BE SUCH THAT THE CAPACITY OF THE STRUCTURE WILL NOT BE EXCEEDED.
5. DISCHARGE WATER SHALL BE FORCED INTO SHEET FLOW IMMEDIATELY BEYOND THE SPILL PAD USING A COMBINATION OF STRAW BALES AND THE NATURAL TOPOGRAPHY. RECESS STRAW BALES. DRIVE TWO (2) STAKES OR REBAR INTO EACH BALE TO ANCHOR THEM IN PLACE.
6. INSTALLATION SPECIFICATIONS TO BE MODIFIED AS NECESSARY TO SUIT ACTUAL SITE CONDITIONS.

REVISIONS
01 2008-11-04 MODIFIED DRAWING NOTES
02 2010-10-08 UPDATED DRAWING NOTES
03 2010-10-11 UPDATED DRAWING NOTES

TransCanada
In business to deliver

exp Energy Services Inc.
t: +1.850.385.5441 | f: +1.850.385.5523
1300 Metropolitan Blvd
Tallahassee, FL 32308
USA
www.exp.com

DESIGNER: JMP (NAME) 2010-10-21 (DATE)	KEYSTONE XL PROJECT		
	FIA # 4359	CHAINAGE:	DISCIPLINE # 03
	TITLE: DETAIL 6 TYPICAL STRAW BALE DEWATERING STRUCTURE		
CHECKED BY: WSF	DESIGN CHECKER: RW P7100	SCALE N.T.S.	DWG No 4359-03-ML-05-706 REV 03

TC_A4_BR.DWG 8.5X11

CADD DRAWING: DO NOT MAKE MANUAL REVISIONS

THESE ARE TYPICAL DRAWINGS; ACTUAL SITE CONDITIONS MAY VARY FROM THE SITE GRAPHICALLY REPRESENTED.

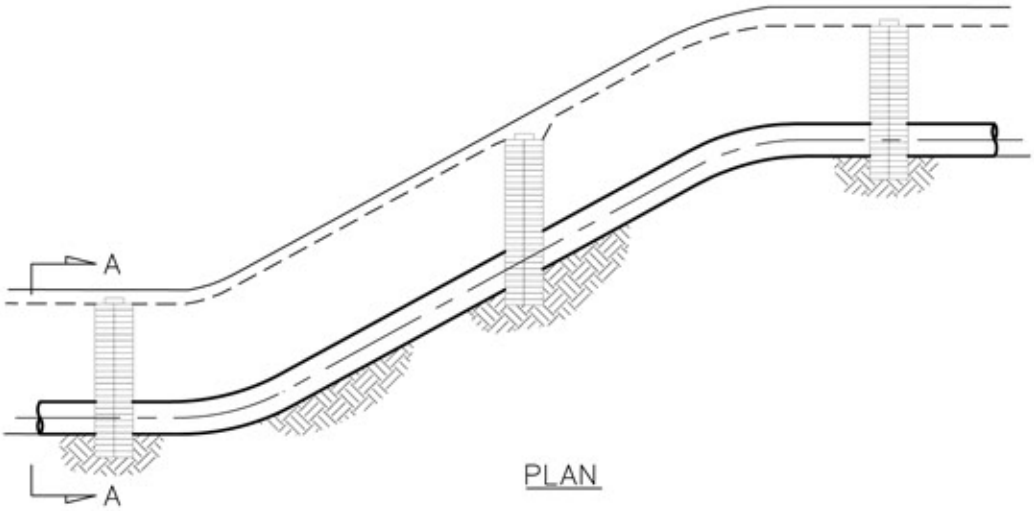

PLAN

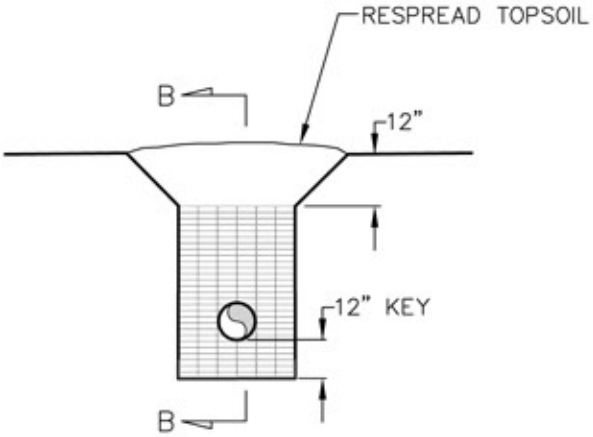

SECTION A–A

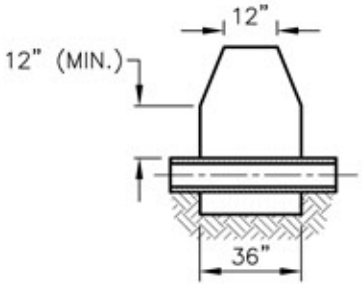

SECTION B–B

NOTES:

1. TRENCH BREAKERS TO BE INSTALLED AS SHOWN ON THE CONSTRUCTION DRAWINGS, WHERE DESCRIBED IN THE PLAN, AND AS DIRECTED.
2. OPEN WEAVE HEMP OR JUTE SACKS SHALL BE FILLED WITH AN AVERAGE 55 LBS. MIXTURE OF:
   1) ONE (1) PART CEMENT AND SIX (6) PARTS SAND OR SUBSOIL, OR
   2) ONE (1) PART CEMENT, THREE (3) PARTS FLYASH, AND FIVE (5) PARTS SAND OR SUBSOIL
   3) SAND WITH JUST SUFFICIENT WATER TO PERMIT MIXTURE TO EXUDE AND BOND SACKS TOGETHER. TOPSOIL IS NOT TO BE USED IN SACKS.
3. KEY EACH TRENCH BREAKER A MINIMUM OF ONE (1) FT. INTO BOTTOMS AND SIDES OF TRENCH.
4. FOAM TRENCH BREAKERS MAY BE USED IN LIEU OF SAND SACK TRENCH BREAKERS.
5. INSTALLATION SPECIFICATIONS TO BE MODIFIED AS NECESSARY TO SUIT ACTUAL SITE CONDITIONS.
6. TRENCH BREAKERS SHALL BE INSTALLED SUCH THAT THE TOP OF EACH DOWNSLOPE BREAKER IS ABOVE THE BOTTOM OF THE NEXT UPSLOPE BREAKER.

REVISIONS
01 2008–11–04 UPDATED DRAWING NOTES
02 2010–10–11 UPDATED PLAN DETAIL

TransCanada
In business to deliver

exp Energy Services Inc.
t: +1.850.385.5441 | f: +1.850.385.5523
1300 Metropolitan Blvd
Tallahassee, FL 32308
USA
www.exp.com

DESIGNER: JMP (NAME) 2010–10–21 (DATE)

CHECKED BY: WSF

DESIGN CHECKER: RW P7100

KEYSTONE XL PROJECT

FIA # 4359 | CHAINAGE: | DISCIPLINE # 03

TITLE
DETAIL 7
TYPICAL PERMANENT TRENCH BREAKER

SCALE N.T.S. | DWG No 4359–03–ML–05–707 | REV 02

TC_A4_BR.DWG 8.5X11

CADD DRAWING: DO NOT MAKE MANUAL REVISIONS

THESE ARE TYPICAL DRAWINGS; ACTUAL SITE CONDITIONS MAY VARY FROM THE SITE GRAPHICALLY REPRESENTED.

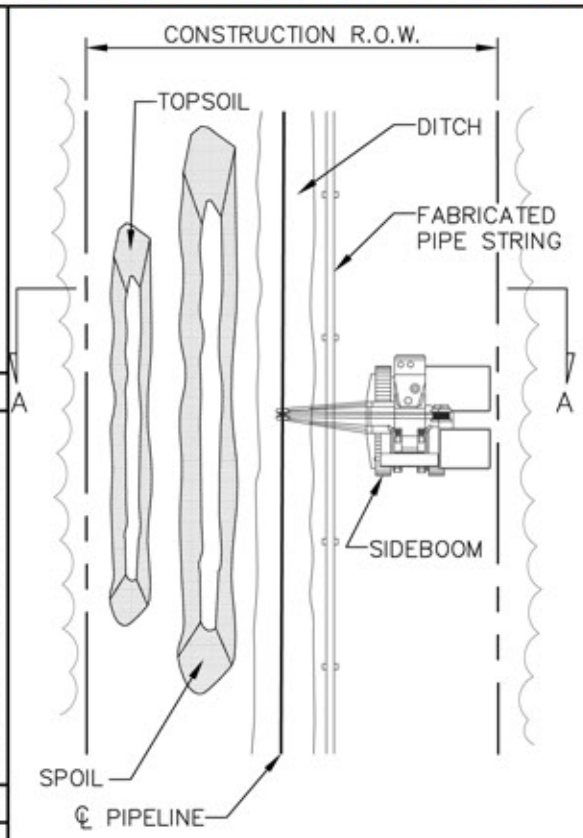

PLAN VIEW

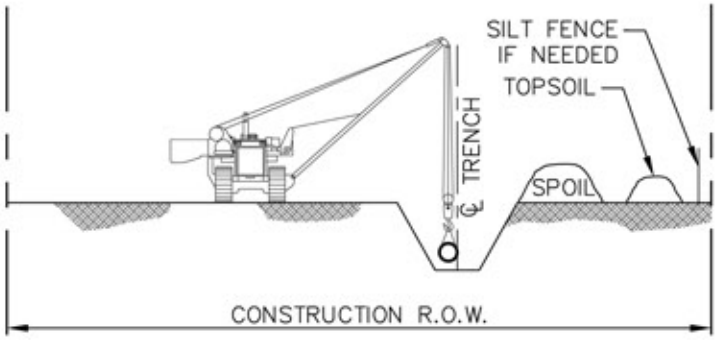

SECTION "A–A"

CONSTRUCTION PROCEDURES:

1. IF THE WETLAND IS BEING CULTIVATED AND FARMED, NO WETLAND CONSTRUCTION PROCEDURES ARE REQUIRED.
2. FLAG WETLAND BOUNDARIES PRIOR TO CLEARING.
3. NO REFUELING OF MOBILE EQUIPMENT IS ALLOWED WITHIN 100 FEET OF WETLAND. PLACE "NO FUELING" SIGN POSTS APPROXIMATELY 100 FEET BACK FROM WETLAND BOUNDARY. REFUEL STATIONARY EQUIPMENT AS PER THE PROJECT'S SPILL PREVENTION PROCEDURES.
4. INSTALL TEMPORARY SLOPE BREAKER UPSLOPE WITHIN 100 FEET OF WETLAND BOUNDARY IF DIRECTED BY THE PROJECT.
5. DO NOT TRENCH WETLAND UNTIL PIPE IS READY TO INSTALL.
6. CONSTRUCT WHEN DRY, IF POSSIBLE. IF SITE BECOMES WET AT TIME OF TRENCHING, AVOID SOIL COMPACTION BY UTILIZING TIMBER RIP–RAP OR PREFABRICATED EQUIPMENT MATS.
7. AVOID ADJACENT WETLANDS. INSTALL SEDIMENT BARRIERS (STRAW BALES AND/OR SILT FENCE) AT DOWN SLOPE EDGE OF RIGHT–OF–WAY ALONG WETLAND EDGE IF NEEDED TO CONTAIN SPOIL WITHIN RIGHT–OF–WAY.
8. RESTRICT ROOT GRUBBING TO ONLY THAT AREA OVER THE DITCHLINE AND REMOVE STUMPS FROM WETLAND FOR DISPOSAL.
9. CONDUCT TRENCH LINE TOPSOIL STRIPPING (IF TOPSOIL IS NOT SATURATED). SALVAGE TOPSOIL TO ACTUAL DEPTH OR A MAXIMUM DEPTH OF 12 INCHES.
10. TRENCH THROUGH WETLANDS.
11. PIPE SECTION TO BE FABRICATED WITHIN THE WETLAND AND ADJACENT TO ALIGNMENT, OR IN STAGING AREA OUTSIDE THE WETLAND AND WALKED IN.
12. LOWER–IN PIPE. PRIOR TO BACKFILLING TRENCH, IF REQUIRED, TRENCH PLUGS SHALL BE INSTALLED AS REQUIRED. BACKFILL TRENCH.
13. RESTORE GRADE TO NEAR PRE–CONSTRUCTION TOPOGRAPHY, REPLACE TOPSOIL AND INSTALL PERMANENT EROSION CONTROL.
14. IF UTILIZED, REMOVE TIMBER MATS OR PRE–FABRICATED MATS FROM WETLANDS UPON COMPLETION.
15. IN THE ABSENCE OF A DETAILED REVEGETATION PLANS, APPLY A TEMPORARY COVER CROP AS DIRECTED BY KEYSTONE.

REVISIONS
01 REVISED NOTES 3 & 4
02 2010–10–08 UPDATED DRAWING NOTES
03 2010–10–11 UPDATED DRAWING NOTES

TransCanada
In business to deliver

exp Energy Services Inc.
t: +1.850.385.5441 | f: +1.850.385.5523
1300 Metropolitan Blvd
Tallahassee, FL 32308
USA
www.exp.com

DESIGNER: JMP (NAME) 2010–10–21 (DATE)

CHECKED BY: WSF | DESIGN CHECKER: RW | P7100

KEYSTONE XL PROJECT

FIA # 4359 | CHAINAGE: | DISCIPLINE # 03

TITLE: DETAIL 8 "DRY" WETLAND CROSSING METHOD

SCALE N.T.S. | DWG No 4359–03–ML–03–701 | REV 03

TC_A4_BR.DWG 8.5X11

CADD DRAWING: DO NOT MAKE MANUAL REVISIONS

THESE ARE TYPICAL DRAWINGS; ACTUAL SITE CONDITIONS MAY VARY FROM THE SITE GRAPHICALLY REPRESENTED.

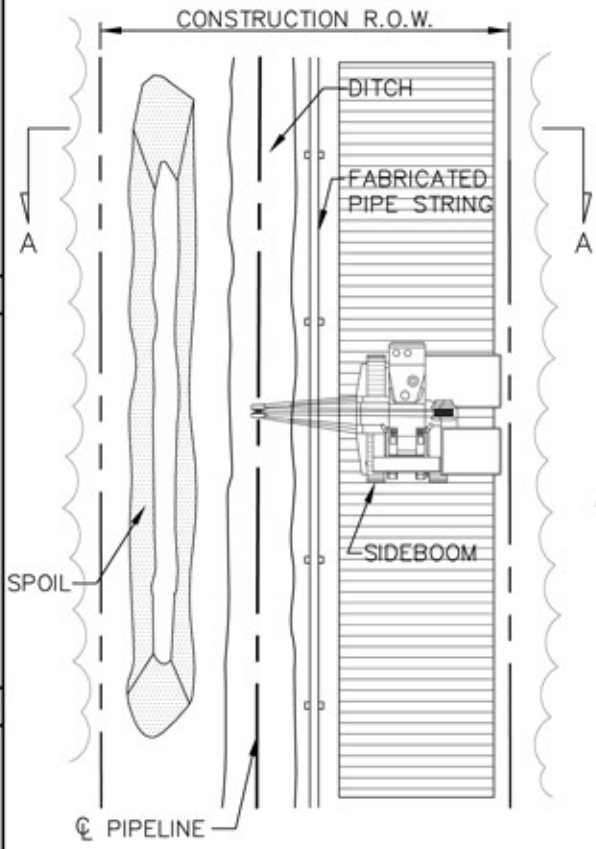

PLAN VIEW

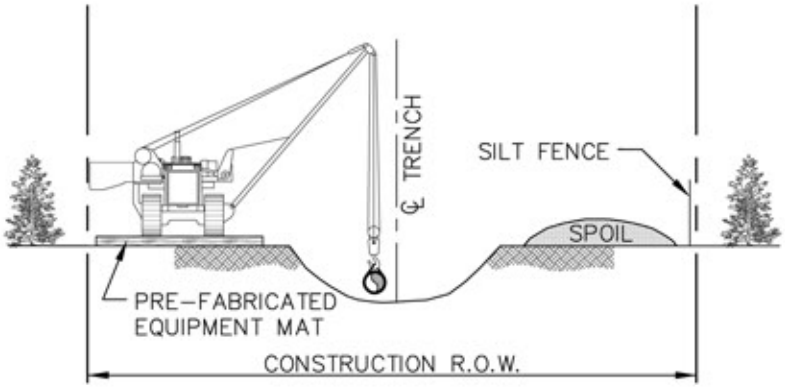

SECTION A–A

CONSTRUCTION PROCEDURES:

1. FLAG WETLAND BOUNDARIES PRIOR TO CLEARING.
2. NO REFUELING OF MOBILE EQUIPMENT IS ALLOWED WITHIN 100 FEET OF WETLAND. PLACE "NO FUELING" SIGN POSTS 100 FEET BACK FROM WETLAND BOUNDARY. REFUEL STATIONARY EQUIPMENT AS PER THE PROJECT'S SPILL PREVENTION PROCEDURES.
3. INSTALL TEMPORARY SLOPE BREAKER UPSLOPE WITHIN 100 FEET OF WETLAND BOUNDARY IF DIRECTED BY THE PROJECT.
4. INSTALL TIMBER MATS/RIPRAP THROUGH ENTIRE WETLAND AREA. EQUIPMENT NECESSARY FOR RIGHT-OF-WAY CLEARING MAY MAKE ONE (1) PASS THROUGH THE WETLAND BEFORE MATS ARE INSTALLED.
5. AVOID ADJACENT WETLANDS. INSTALL SEDIMENT BARRIERS (STRAW BALES AND/OR SILT FENCE) AT DOWNSLOPE EDGE OF RIGHT-OF-WAY AND ALONG WETLAND EDGE AS REQUIRED.
6. RESTRICT ROOT GRUBBING TO ONLY THAT AREA OVER THE DITCHLINE AND DITCH SPOIL AREAS AND REMOVED FROM WETLAND FOR DISPOSAL.
7. DO NOT TRENCH WETLAND UNTIL PIPE IS READY TO INSTALL.
8. TOPSOIL STRIPPING SHALL NOT BE REQUIRED IN SATURATED SOIL CONDITIONS.
9. LEAVE HARD PLUGS AT EDGE OF WETLAND UNTIL JUST PRIOR TO TRENCHING.
10. PIPE SECTION MAY BE FABRICATED WITHIN THE WETLAND AND ADJACENT TO ALIGNMENT, OR IN STAGING AREA OUTSIDE THE WETLAND AND WALKED IN.
11. TRENCH THROUGH WETLANDS.
12. LOWER-IN PIPE, INSTALL TRENCH PLUGS AT WETLAND EDGES AS REQUIRED AND BACKFILL IMMEDIATELY.
13. REMOVE TIMBER MATS OR PRE-FABRICATED MATS FROM WETLAND UPON COMPLETION.
14. RESTORE GRADE TO NEAR PRE-CONSTRUCTION TOPOGRAPHY, REPLACE TOPSOIL IF SALVAGED AND INSTALL PERMANENT EROSION CONTROL.

REVISIONS
01 REVISED NOTES 2 & 3
02 2010-10-11 UPDATED DRAWING NOTES

TransCanada
In business to deliver

exp Energy Services Inc.
t: +1.850.385.5441 | f: +1.850.385.5523
1300 Metropolitan Blvd
Tallahassee, FL 32308
USA
www.exp.com

DESIGNER: JMP (NAME) 2010-10-21 (DATE)

CHECKED BY: WSF

DESIGN CHECKER: RW P7100

KEYSTONE XL PROJECT

FIA # 4359 | CHAINAGE: | DISCIPLINE # 03

TITLE: DETAIL 9 STANDARD WETLAND CROSSING METHOD

SCALE N.T.S. | DWG No 4359-03-ML-03-702 | REV 02

TC_A4_BR.DWG 8.5X11

CADD DRAWING: DO NOT MAKE MANUAL REVISIONS

THESE ARE TYPICAL DRAWINGS; ACTUAL SITE CONDITIONS MAY VARY FROM THE SITE GRAPHICALLY REPRESENTED.

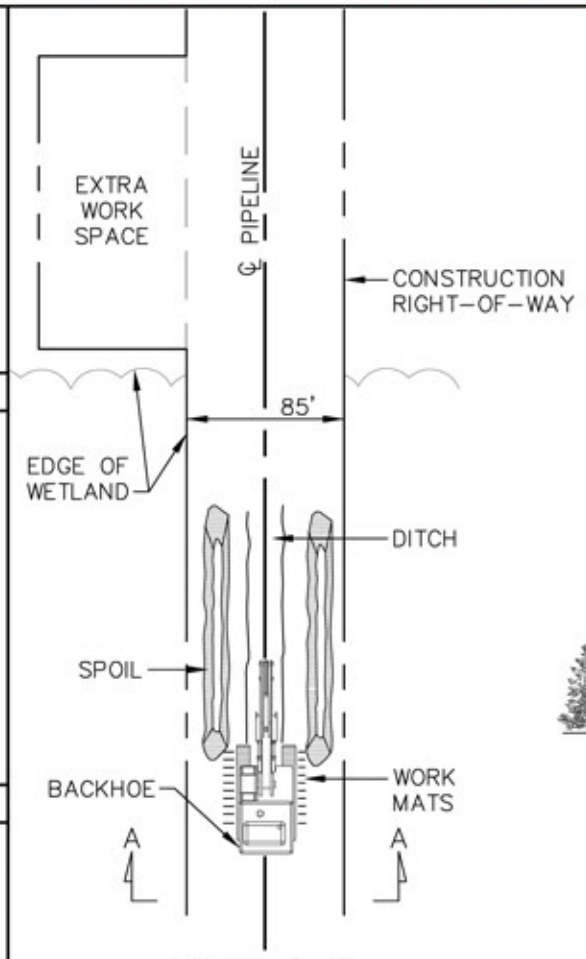

PLAN VIEW

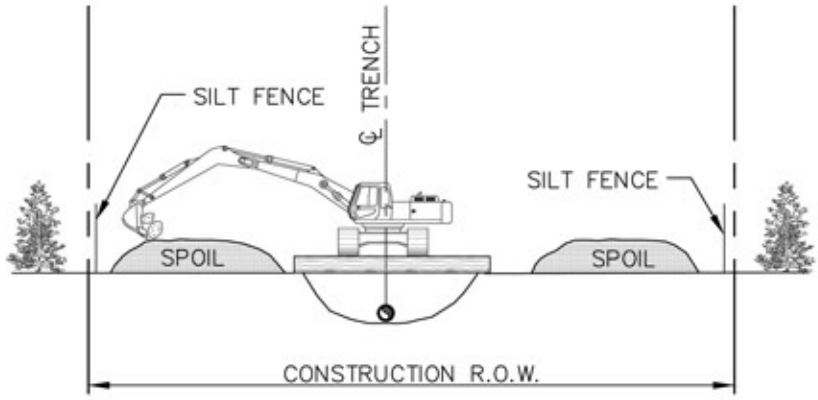

SECTION A–A

CONSTRUCTION PROCEDURES:

1. FLAG WETLAND BOUNDARIES PRIOR TO CLEARING.
2. NO REFUELING OF MOBILE EQUIPMENT IS ALLOWED WITHIN 100 FEET OF WETLAND. PLACE "NO FUELING" SIGN POSTS 100 FEET BACK FROM WETLAND BOUNDARY. REFUEL STATIONARY EQUIPMENT AS PER THE PROJECT'S SPILL PREVENTION PROCEDURES.
3. INSTALL TEMPORARY SLOPE BREAKER UPSLOPE WITHIN 100 FEET OF WETLAND BOUNDARY AS DIRECTED BY THE PROJECT.
4. RESTRICT ROOT GRUBBING TO ONLY THE AREA OVER THE DITCHLINE.
5. DO NOT TRENCH WETLAND UNTIL PIPE IS READY TO INSTALL.
6. TOPSOIL STRIPPING SHALL NOT BE REQUIRED IN SATURATED SOIL CONDITIONS.
7. UTILIZE AMPHIBIOUS EXCAVATORS (PONTOON MOUNTED BACKHOES) OR TRACKED BACKHOES SUPPORTED BY FABRICATED TIMBER MATS OR FLOATS TO EXCAVATE TRENCH. IF FABRICATED TIMBER MATS ARE USED FOR STABILIZATION, THE BACKHOE SHALL GRADUALLY MOVE ACROSS THE WETLAND BY MOVING THE MAT FROM IMMEDIATELY BEHIND TO IMMEDIATELY IN FRONT OF THE BACKHOE'S PATH.
8. AVOID ADJACENT WETLANDS. INSTALL SEDIMENT BARRIERS (STRAW BALES AND/OR SILT FENCE) AT EDGE OF RIGHT-OF-WAY AND ALONG WETLAND EDGE IF PRACTICAL.
9. FABRICATE PIPE IN STAGING AREA OUTSIDE THE WETLAND IN THE EXTRA WORK SPACE AS INDICATED ON THE CONSTRUCTION DRAWINGS.
10. LEAVE HARD PLUGS AT THE EDGE OF THE WETLAND UNTIL JUST PRIOR TO PIPE PLACEMENT.
11. FLOAT PIPE IN PLACE, LOWER-IN, INSTALL TRENCH PLUGS AT WETLAND EDGES WHERE REQUIRED AND BACKFILL IMMEDIATELY.
12. REMOVE TIMBER MATS OR PRE-FABRICATED MATS OF NON-NATIVE MATERIAL FROM WETLANDS UPON COMPLETION.
13. RESTORE GRADE TO NEAR PRE-CONSTRUCTION TOPOGRAPHY AND INSTALL PERMANENT EROSION CONTROL.
14. THE CONSTRUCTION RIGHT-OF-WAY FOR THIS TYPE OF CONSTRUCTION SHALL BE 85 FEET.

REVISIONS	
01	REVISED NOTES 2, 3 & 13
02	2010-10-11 UPDATED DRAWING NOTES

TransCanada
In business to deliver

exp Energy Services Inc.
t: +1.850.385.5441 | f: +1.850.385.5523
1300 Metropolitan Blvd
Tallahassee, FL 32308
USA
www.exp.com

DESIGNER:		KEYSTONE XL PROJECT		
JMP (NAME)	2010-10-21 (DATE)	FIA # 4359	CHAINAGE:	DISCIPLINE # 03
		TITLE: DETAIL 10 PUSH/PULL WETLAND CROSSING METHOD		
CHECKED BY: WSF	DESIGN CHECKER: RW P7100	SCALE N.T.S.	DWG No 4359-03-ML-03-703	REV 02

TC_A4_BR.DWG 8.5X11

CADD DRAWING: DO NOT MAKE MANUAL REVISIONS

THESE ARE TYPICAL DRAWINGS; ACTUAL SITE CONDITIONS MAY VARY FROM THE SITE GRAPHICALLY REPRESENTED.

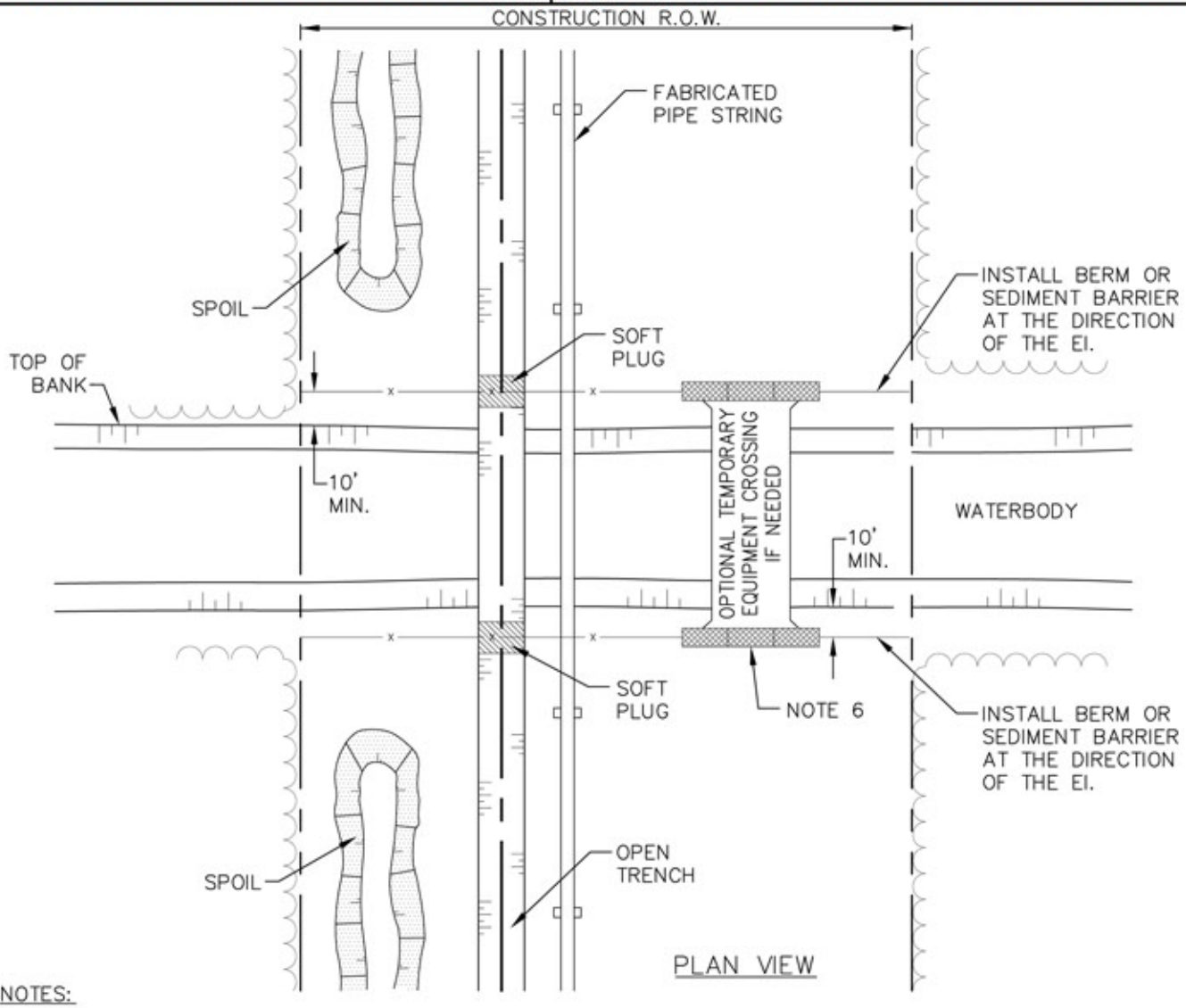

NOTES:

1. THIS METHOD APPLIES TO DRY WASHES, SWALES, INCISED DRAINAGES AND DITCHES WITH NO PERCEPTIBLE FLOW AT TIME OF CROSSING. IF FLOWS ARE PRESENT DURING CONSTRUCTION REFER TO DETAIL 12. CLEARING AND GRADING, TOPSOIL SALVAGE AND TOPSOIL STRIPPING DEPTHS SHALL BE THE SAME AS INDICATED FOR ADJACENT UPLAND UNLESS OTHERWISE DIRECTED BY KEYSTONE.
2. EI TO FLAG THE ORDINARY HIGH WATER MARK (OHWM) PRIOR TO CLEARING.
3. INSTALL SILT FENCE OR A BERM AT DIRECTION OF KEYSTONE EI TO PREVENT RUNOFF FROM ROW TO ADJACENT, UNDISTURBED DRAINAGE.
4. STOCKPILE TOPSOIL AND SPOIL SEPARATELY. TOPSOIL SHALL NOT BE STOCKPILED ACROSS THE DRAINAGE CHANNEL AND SHALL BE PLACED A MINIMUM OF 15 FEET FROM THE OHWM OR TO SUIT CONDITIONS AND PROTECT THE DRAINAGE AS DETERMINED BY KEYSTONE.
5. INSTALL TEMPORARY SLOPE BREAKERS WHERE IDENTIFIED BY THE EI.
6. TRENCH, STRING PIPE, AND BACKFILL USING STANDARD UPLAND CONSTRUCTION PROCEDURES UNLESS OTHERWISE DIRECTED BY KEYSTONE.
7. RESTORE WATERCOURSE CHANNEL AND BANKS (EXCEPT TRAVEL LANE IF USED) TO APPROXIMATE PRE-CONSTRUCTION PROFILE IMMEDIATELY AFTER PIPE IS LOWERED IN AND BACKFILLED. INSTALL PERMANENT EROSION CONTROLS WHERE DIRECTED BY KEYSTONE.
8. REMOVE ANY TEMPORARY CROSSING STRUCTURES AND/OR GRAVEL.

REVISIONS | 01 UPDATED DRAWING NOTES | 02 2010-10-08 UPDATED DRAWING NOTES | 03 2010-10-11 UPDATED DRAWING NOTES

TransCanada
In business to deliver

exp Energy Services Inc.
t: +1.850.385.5441 | f: +1.850.385.5523
1300 Metropolitan Blvd
Tallahassee, FL 32308
USA
www.exp.com

DESIGNER: JMP (NAME) 2010-10-21 (DATE)	KEYSTONE XL PROJECT		
	FIA # 4359	CHAINAGE:	DISCIPLINE # 03
	TITLE: DETAIL 11 TYPICAL OPEN CUT WET CROSSING METHOD NON-FLOWING WATERBODY		
CHECKED BY: WSF / DESIGN CHECKER: RW P7100	SCALE N.T.S.	DWG No 4359-03-ML-03-704	REV 03

TC_A4_BR.DWG 8.5X11

CADD DRAWING: DO NOT MAKE MANUAL REVISIONS

THESE ARE TYPICAL DRAWINGS; ACTUAL SITE CONDITIONS MAY VARY FROM THE SITE GRAPHICALLY REPRESENTED.

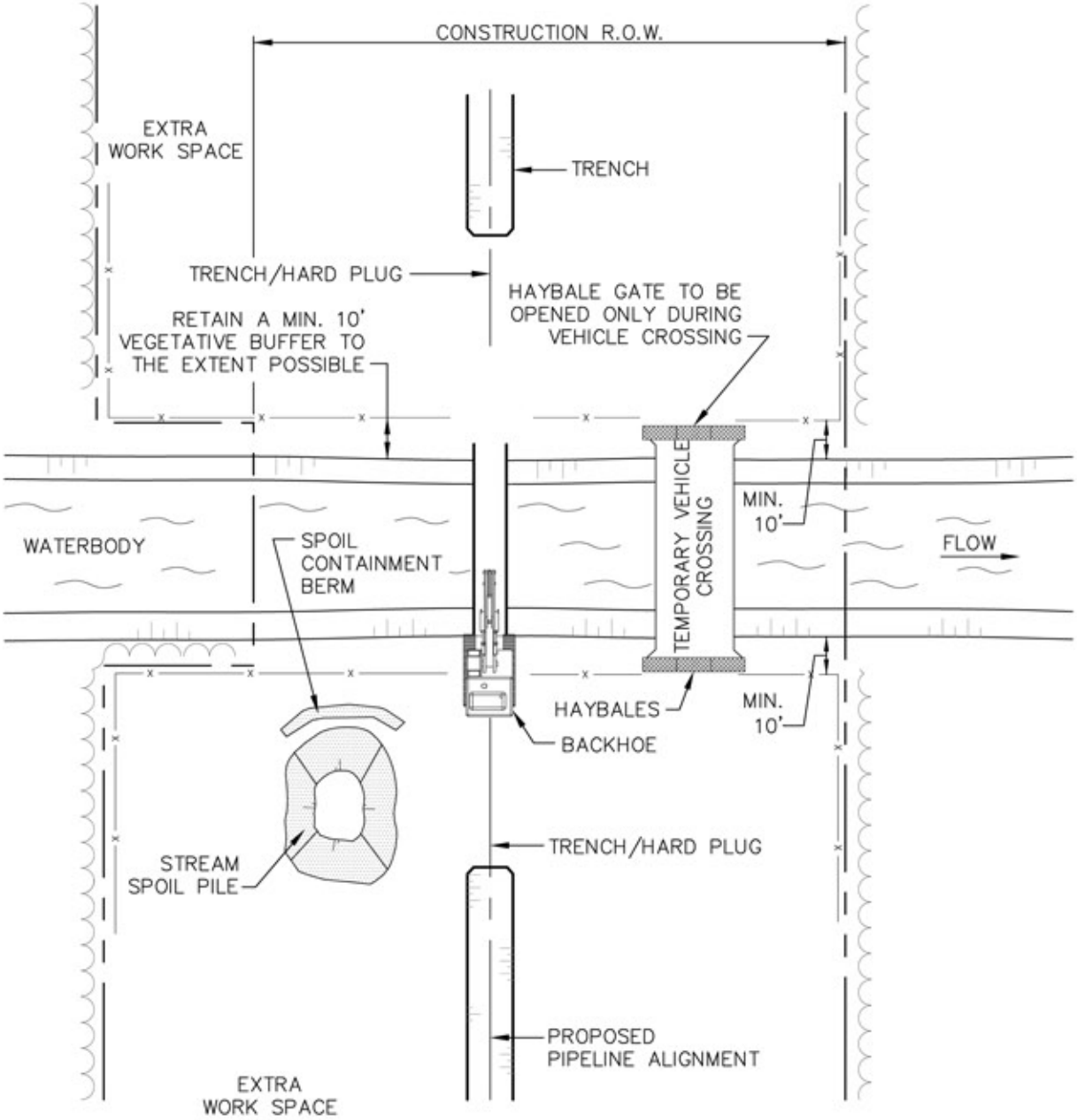

PLAN VIEW

REVISIONS | 01 UPDATED DRAWING NOTES | 02 2010-10-11 REVISED TITLE BLOCK

TransCanada
In business to deliver

exp Energy Services Inc.
t: +1.850.385.5441 | f: +1.850.385.5523
1300 Metropolitan Blvd
Tallahassee, FL 32308
USA
www.exp.com

DESIGNER: JMP (NAME) 2010-10-21 (DATE)	KEYSTONE XL PROJECT		
	FIA # 4359	CHAINAGE:	DISCIPLINE # 03
	TITLE: DETAIL 12 TYPICAL OPEN CUT WET CROSSING METHOD FLOWING WATERBODY		
CHECKED BY: WSF	DESIGN CHECKER: RW P7100	SCALE N.T.S.	DWG No 4359-03-ML-03-705 REV 02

TC_A4_BR.DWG 8.5X11

CADD DRAWING: DO NOT MAKE MANUAL REVISIONS

THESE ARE TYPICAL DRAWINGS; ACTUAL SITE CONDITIONS MAY VARY FROM THE SITE GRAPHICALLY REPRESENTED.

CONSTRUCTION PROCEDURES:

1. RIGHT-OF-WAY BOUNDARIES AND WORK SPACE LIMITS SHALL BE CLEARLY DELINEATED. STAGING FOR MAKEUP SHALL BE LOCATED A MINIMUM OF 10 FEET FROM WATERBODY.

2. CLEARING LIMITS WILL BE CLEARLY DELINEATED AND 10 FOOT VEGETATIVE BUFFER STRIP BETWEEN DISTURBED AREA AND THE WATERBODY SHALL BE MAINTAINED TO THE EXTENT POSSIBLE. ALL CLEARING SHALL BE MINIMIZED TO THE EXTENT POSSIBLE AND TO ONLY THAT NECESSARY FOR CONSTRUCTION. WOODY VEGETATION SHALL BE CUT AT GROUND LEVEL AND THE STUMPS/ROOTS LEFT IN PLACE TO THE EXTENT POSSIBLE.

3. TOPSOIL SHALL BE STRIPPED FROM THE DITCH LINE IN ALL WETLANDS RIPARIAN.

4. CONTRACTOR SHALL INSTALL SIGNS APPROXIMATELY 100 FEET MINIMUM FROM EACH WATERBODY AND WETLAND TO IDENTIFY THE HAZARDOUS MATERIALS EXCLUSION AREA.

5. EROSION AND SEDIMENT CONTROL
   a. CONTRACTOR SHALL SUPPLY, INSTALL AND MAINTAIN SEDIMENT CONTROL STRUCTURES, AS DEPICTED OR ALONG DOWN GRADIENT SIDES OF WORK AREAS AND STAGING AREAS SUCH THAT NO HEAVILY SILT LADEN WATER ENTERS WATERBODY OR WETLAND.

   b. NO HEAVILY SILT LADEN WATER SHALL BE DISCHARGED DIRECTLY OR INDIRECTLY INTO THE WATERBODY. ALL EROSION AND SEDIMENT CONTROL STRUCTURE LOCATIONS AS DEPICTED ARE APPROXIMATE AND MAY BE ADJUSTED AS DIRECTED BY THE COMPANY INSPECTOR TO SUIT ACTUAL SITE CONDITIONS. SILT FENCE OR STRAW BALE INSTALLATIONS SHALL INCLUDE REMOVABLE SECTIONS TO FACILITATE ACCESS DURING CONSTRUCTION.

   c. SEDIMENT LADEN WATER FROM TRENCH DEWATERING SHALL BE DISCHARGED TO A WELL VEGETATED UPLAND AREA INTO A STRAW BALE DEWATERING STRUCTURE OR GEOTEXTILE FILTER BAG. SEDIMENT CONTROL STRUCTURES MUST BE IN PLACE AT ALL TIMES ACROSS THE DISTURBED CONSTRUCTION RIGHT-OF-WAY EXCEPT DURING EXCAVATION/INSTALLATION OF THE CROSSING PIPE.

   d. SOFT DITCH PLUGS MUST REMAIN IN PLACE AT CONVENIENT LOCATIONS TO SEPARATE MAINLINE DITCH FROM THE WATERBODY CROSSING UNTIL THE WATER CROSSING IS INSTALLED AND BACKFILLED.

   e. TRENCH BREAKERS ARE TO BE INSTALLED AT THE SAME SPACING AND IMMEDIATELY UPSLOPE OF PERMANENT SLOPE BREAKERS, OR AS DIRECTED BY THE COMPANY.

6. CONTRACTOR SHALL MAINTAIN HARD PLUGS IN THE DITCH AT THE WATERBODY UNTIL JUST PRIOR TO PIPE INSTALLATION. CONTRACTOR SHALL EXCAVATE TRENCH AND INSTALL PIPE AS EXPEDIENTLY AS PRACTICAL TO REDUCE THE DURATION OF WORK ACTIVITIES IN THE WATERBODY BED.

7. CONTRACTOR SHALL PLACE TRENCH SPOIL ONLY IN CERTIFICATED WORK SPACE AND A MINIMUM OF 10 FEET FROM THE WATERBODY BANKS TO PREVENT ENTRY OF SPOIL INTO THE WATERBODY. SPOIL SHALL BE CONTAINED AS NECESSARY USING EITHER A STRAW BALE BARRIER OR AN EARTH/ROCK BERM.

8. CONTRACTOR SHALL RESTORE THE WATERBODY AND BANKS TO APPROXIMATE PRE-CONSTRUCTION CONTOURS, UNLESS OTHERWISE APPROVED BY THE COMPANY. CONTRACTOR SHALL INSTALL PERMANENT EROSION AND SEDIMENT CONTROL STRUCTURES AS INDICATED. ANY MATERIALS PLACED IN THE WATERBODY TO FACILITATE CONSTRUCTION SHALL BE REMOVED DURING RESTORATION. BANKS SHALL BE STABILIZED AND TEMPORARY SEDIMENT BARRIERS INSTALLED AS SOON AS POSSIBLE AFTER CROSSING, BUT WITHIN 24 HOURS OF COMPLETING THE CROSSING. MAINTAIN A SILT FENCE OR STRAW BALE BARRIER ALONG THE WATERBODY AND WETLAND BOUNDARIES UNTIL VEGETATION IS ESTABLISHED IN ADJACENT DISTURBED AREAS.

9. VEHICLE CROSSING CAN BE CONSTRUCTED USING EITHER A FLUME CROSSING OR A TEMPORARY BRIDGE. VEHICLE CROSSING ONLY REQUIRED IF STREAM SUPPORTS A STATE DESIGNATED FISHERY.

REVISIONS 01 2010-10-11 REVISED TITLE BLOCK

TransCanada
In business to deliver
exp Energy Services Inc.
t: +1.850.385.5441 | f: +1.850.385.5523
1300 Metropolitan Blvd
Tallahassee, FL 32308
USA
www.exp.com

DESIGNER:		KEYSTONE XL PROJECT		
JMP (NAME)	2010-10-21 (DATE)	FIA # 4359	CHAINAGE:	DISCIPLINE # 03
		TITLE: DETAIL 12A TYPICAL OPEN CUT WET CROSSING METHOD FLOWING WATERBODY – CONSTRUCTION PROCEDURES		
CHECKED BY: WSF	DESIGN CHECKER: RW P7100	SCALE N.T.S.	DWG No 4359-03-ML-03-706	REV 01

TC_A4_BR.DWG 8.5X11

CADD DRAWING: DO NOT MAKE MANUAL REVISIONS

THESE ARE TYPICAL DRAWINGS; ACTUAL SITE CONDITIONS MAY VARY FROM THE SITE GRAPHICALLY REPRESENTED.

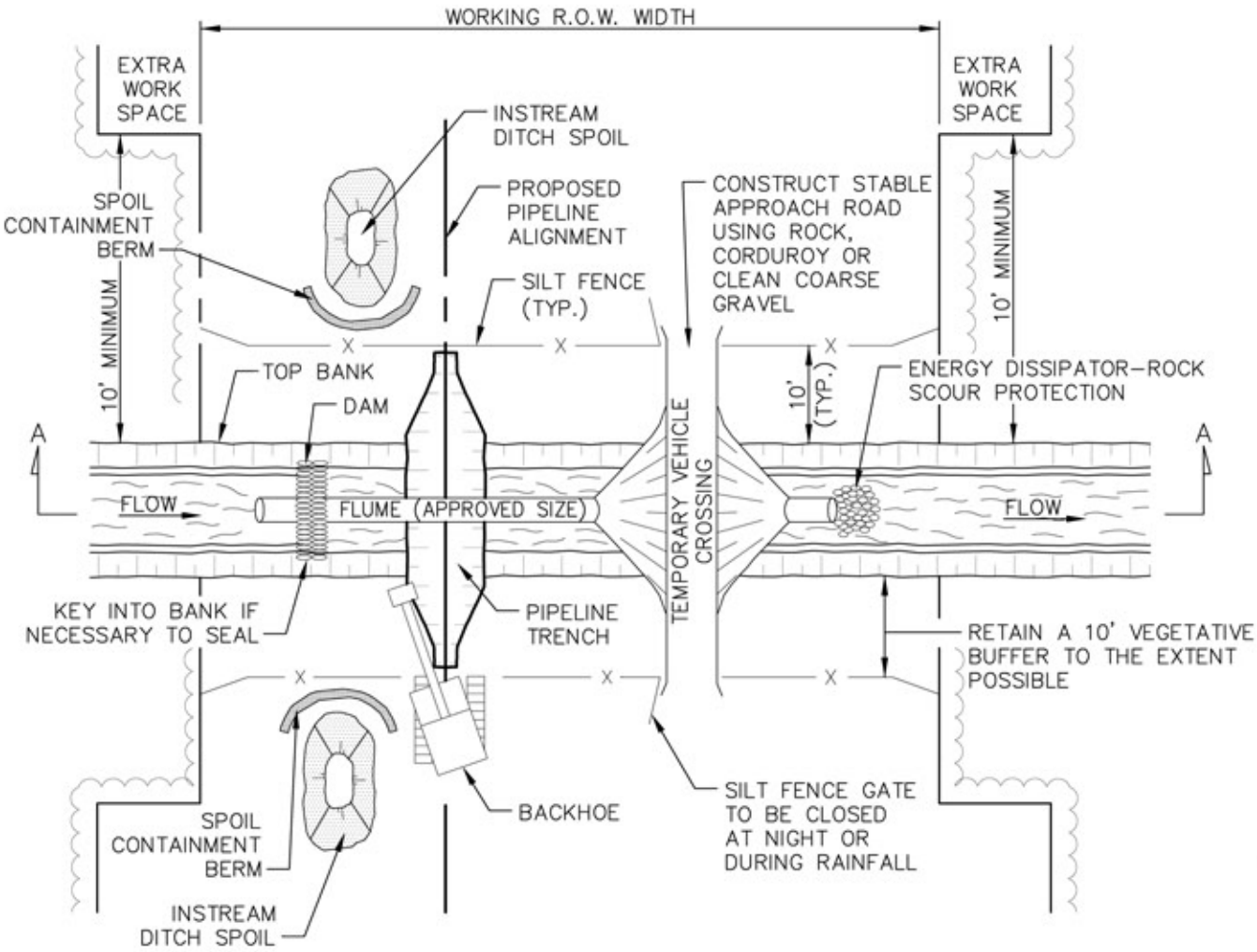

PLAN VIEW

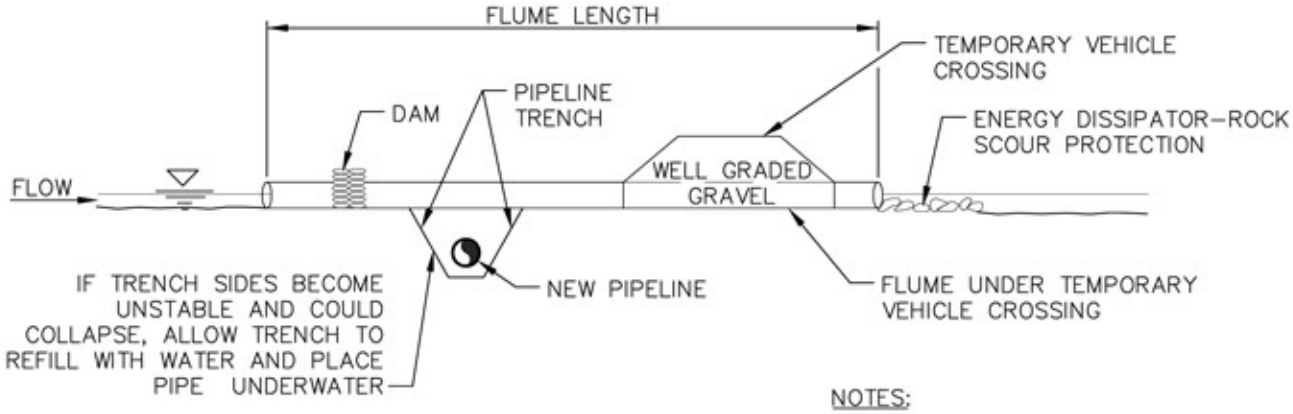

SECTION A–A

NOTES:

1. PIPELINE PLACEMENT WITHIN RIGHT–OF–WAY CONCEPTUAL ONLY.
2. SEE DETAIL 13A FOR CONSTRUCTION PROCEDURES.

REVISIONS 01 2010–10–11 REVISED TITLE BLOCK

TransCanada
In business to deliver

exp Energy Services Inc.
t: +1.850.385.5441 | f: +1.850.385.5523
1300 Metropolitan Blvd
Tallahassee, FL 32308
USA
www.exp.com

DESIGNER: JMP (NAME) 2010–10–21 (DATE)

CHECKED BY: WSF

DESIGN CHECKER: RW

P7100

KEYSTONE XL PROJECT

FIA # 4359 | CHAINAGE: | DISCIPLINE # 03

TITLE
DETAIL 13
TYPICAL DRY FLUME CROSSING METHOD

SCALE N.T.S. | DWG No 4359–03–ML–03–707 | REV 01

TC_A4_BR.DWG 8.5X11

CADD DRAWING: DO NOT MAKE MANUAL REVISIONS

THESE ARE TYPICAL DRAWINGS; ACTUAL SITE CONDITIONS MAY VARY FROM THE SITE GRAPHICALLY REPRESENTED.

CONSTRUCTION PROCEDURES:

1. MARK OUT AND MAINTAIN LIMITS OF AUTHORIZED WORK AREAS WITH FENCING OR FLAGGING TAPE TO AVOID UNNECESSARY DISTURBANCE OF VEGETATION. ENSURE EQUIPMENT OPERATORS WORKING ON THE CROSSING HAVE BEEN BRIEFED ABOUT THIS PLAN AND THE MEASURE NEEDED TO PROTECT WATER QUALITY.
2. ALL NECESSARY EQUIPMENT AND MATERIALS TO BUILD THE FLUME MUST BE ON-SITE OR READILY AVAILABLE PRIOR TO COMMENCING IN-WATER WORK.
3. TO THE EXTENT POSSIBLE, MAINTAIN A MINIMUM 10 FT. VEGETATIVE BUFFER STRIP BETWEEN DISTURBED AREAS AND THE WATERCOURSE. INSTALL AND MAINTAIN A SILT FENCE OR STRAW BALE BARRIER UPSLOPE OF THE BUFFER STRIP ON EACH SIDE OF THE WATERCOURSE.
4. CONTRACTOR SHALL SUPPLY, INSTALL AND MAINTAIN SEDIMENT CONTROL STRUCTURES, AS DEPICTED OR ALONG DOWN GRADIENT SIDES OF WORK AREAS AND STAGING AREAS SUCH THAT NO HEAVILY SILT LADEN WATER ENTERS STREAM.
   a. NO HEAVILY SILT LADEN WATER SHALL BE DISCHARGED DIRECTLY INTO THE STREAM.
   b. EROSION AND SEDIMENT CONTROL STRUCTURE LOCATIONS AS DEPICTED ARE APPROXIMATE AND MAY BE ADJUSTED AS DIRECTED BY THE COMPANY INSPECTOR TO ACTUAL SITE CONDITIONS.
   c. SILT FENCE OR STRAW BALE INSTALLATIONS SHALL INCLUDE REMOVABLE SECTIONS TO FACILITATE ACCESS DURING CONSTRUCTION. UTILIZE STRAW BALE BARRIERS ONLY IN LIEU OF A SILT FENCE WHERE FREQUENT ACCESS IS REQUIRED.
   d. SEDIMENT LADEN WATER FROM TRENCH DEWATERING SHALL BE DISCHARGED TO A WELL VEGETATED UPLAND AREA INTO A STRAW BALE DEWATERING STRUCTURE OR GEOTEXTILE FILTER BAG.
   e. SEDIMENT CONTROL STRUCTURES MUST BE IN PLACE AT ALL TIMES ACROSS THE DISTURBED PORTIONS OF THE RIGHT-OF-WAY EXCEPT DURING EXCAVATION/INSTALLATION OF THE CROSSING PIPE.
   f. SOFT DITCH PLUGS MUST REMAIN IN PLACE AT CONVENIENT LOCATIONS TO SEPARATE MAINLINE DITCH FROM THE RIVER CROSSING UNTIL THE RIVER CROSSING IS INSTALLED AND BACKFILLED.
5. PIPE SHALL BE STRUNG AND WELDED FOR READY INSTALLATION PRIOR TO WATERCOURSE TRENCHING.
6. FLUME CAPACITY DURING DRY CROSSING SHALL BE SUFFICIENT TO ACCOMMODATE 1.5 TIMES THE FLOW MEASURED AT THE TIME OF CONSTRUCTION PROVIDED THAT THE FLUMES WILL BE IN PLACE NOT MORE THAN 96 HOURS AND NO PRECIPITATION IS FORECAST. FLUME CAPACITY FOR VEHICLE ACCESS SHALL BE SUFFICIENT TO PASS THE 2 YEAR DESIGN FLOW OR THE FLOW REASONABLY EXPECTED TO OCCUR DURING THE INSTALLATION. EXCESS FLUMES REQUIRED FOR LONGER TERM ACCESS SHALL BE CAPPED DURING DRY CROSSING PROCEDURES.
7. ENSURE THAT THE DAMS AND VEHICLE CROSSING ARE LOCATED FAR ENOUGH APART TO ALLOW FOR A WIDE EXCAVATION.
8. FLUMES ARE TO BE SET WITH 10 PERCENT OF THEIR DIAMETER BELOW STREAMBED LEVEL WHERE SOIL CONDITIONS PERMIT (OTHERWISE INSTALLED AT STREAM GRADE AND SLOPE.)
9. PLACE IMPERVIOUS DAMS AT EACH END OF THE FLUME, UPSTREAM FIRST, THEN DOWNSTREAM. ACCEPTABLE ALTERNATIVES INCLUDE GRAVEL WITH RIP-RAP PROTECTION, SAND BAGS, STEEL PLATE AND ROCKFILL. DURING INSTALLATION, INSTALL AN IMPERVIOUS MEMBRANE, IF NECESSARY, TO LIMIT LEAKAGE. DAMS MAY NEED KEYING INTO THE BANK AND STREAMBED.
   EXCAVATE TRENCH THROUGH PLUGS AND UNDER FLUME FROM BOTH SIDES. WORK IS TO BE COMPLETED AS QUICKLY AS POSSIBLE.
   a. LOWER IN PIPE BY PASSING UNDER FLUME AND BACKFILL IMMEDIATELY WITH SPOIL MATERIAL.
   b. IT IS NOT NECESSARY TO DEWATER THE IN-STREAM TRENCH, HOWEVER, DISPLACED WATER SHALL BE PUMPED TO A STABLE UPLAND AREA TO AVOID OVERTOPPING OF DAMS DURING PIPE PLACEMENT.
   c. IF THE SPOIL MATERIAL IS NOT SUITABLE, USE IMPORTED CLEAN GRANULAR MATERIAL.
   d. IF BLASTING IS REQUIRED, USE CONTROLLED BLASTING TECHNIQUES TO PREVENT DAMAGE TO THE FLOW CONVEYANCE SYSTEM. ALTERNATIVELY, BLASTING MAY BE ACCOMPLISHED PRIOR TO THE FLUME INSTALLATION BY DRILLING THROUGH THE OVERBURDEN.
10. EXCAVATED MATERIAL MUST NOT BE STOCKPILED WITHIN 10 FT. OF THE WATERCOURSE. THIS MATERIAL SHALL BE CONTAINED TO PREVENT SATURATED SOIL FROM FLOWING BACK INTO THE WATERCOURSE.
11. DEWATERING OF THE ONLAND TRENCH SHOULD OCCUR IN A STABLE VEGETATED AREA A MINIMUM OF 50 FT. FROM ANY WATERBODY. THE PUMP DISCHARGE SHOULD BE DIRECTED ONTO A STABLE SPILL PAD CONSTRUCTED OF ROCKFILL OR TIMBERS TO PREVENT LOCALIZED EROSION. THE DISCHARGE WATER SHOULD ALSO BE FORCED INTO SHEET FLOW IMMEDIATELY BEYOND THE SPILL PAD BY USING STRAW BALES AND THE NATURAL TOPOGRAPHY.
12. FLUMES SHOULD BE REMOVED AS SOON AS POSSIBLE, WHEN NO LONGER REQUIRED FOR PIPE LAYING OR FOR ROAD ACCESS, IN THE FOLLOWING MANNER:
   a. REMOVE THE VEHICLE CROSSING RAMP. BANKS ARE TO BE RESTORED TO A STABLE ANGLE AND PROTECTED WITH EROSION RESISTANT MATERIAL COMPATIBLE WITH THE FLOW CONDITIONS (E.G., EROSION CONTROL BLANKETS, CRIBBING, ROCK RIP-RAP, ETC.) TO THE MAXIMUM EXTENT POSSIBLE BEFORE REMOVING THE DAMS.
   b. REMOVE DOWNSTREAM DAM.
   c. REMOVE UPSTREAM DAM.
   d. REMOVE FLUME.
   e. COMPLETE BANK TRIMMING AND EROSION PROTECTION. IF SANDBAGS ARE USED FOR THE DAMS, PLACE AND REMOVE BY HAND TO AVOID EQUIPMENT BREAKING BAGS.
13. RESTORE THE STREAMBED AND BANKS TO APPROXIMATE PRE-CONSTRUCTION CONTOURS, BUT NOT TO EXCEED 2 HORIZONTAL TO 1 VERTICAL.
   a. INSTALL PERMANENT EROSION AND SEDIMENT CONTROL STRUCTURES AS INDICATED ON A SITE SPECIFIC BASIS. IN THE ABSENCE OF SITE SPECIFIC INFORMATION, A FLEXIBLE CHANNEL LINER SUCH AS NAG C125 OR C350 WHICH IS CAPABLE OF WITHSTANDING ANTICIPATED FLOW SHALL BE INSTALLED. ALTERNATIVELY, ROCK RIP-RAP SHALL BE INSTALLED.
   b. ANY MATERIALS PLACED IN THE STREAM TO FACILITATE CONSTRUCTION SHALL BE REMOVED DURING RESTORATION. BANKS SHALL BE STABILIZED AND TEMPORARY SEDIMENT BARRIERS INSTALLED AS SOON AS POSSIBLE AFTER CROSSING, BUT WITHIN 24 HOURS OF COMPLETING THE CROSSING.
   c. MAINTAIN A SILT FENCE OR STRAW BALE BARRIER ALONG THE WATER COURSE UNTIL VEGETATION IS ESTABLISHED IN ADJACENT DISTURBED AREAS.

REVISIONS
01 REVISED TITLE
02 2010-10-11 REVISED TITLE BLOCK

TransCanada
In business to deliver

exp Energy Services Inc.
t: +1.850.385.5441 | f: +1.850.385.5523
1300 Metropolitan Blvd
Tallahassee, FL 32308
USA
www.exp.com

DESIGNER: JMP (NAME) 2010-10-21 (DATE)	KEYSTONE XL PROJECT		
	FIA # 4359	CHAINAGE:	DISCIPLINE # 03
	TITLE: DETAIL 13A TYPICAL DRY FLUME CROSSING METHOD – CONSTRUCTION PROCEDURES		
CHECKED BY: WSF / DESIGN CHECKER: RW P7100	SCALE N.T.S.	DWG No 4359-03-ML-03-708	REV 02

TC_A4_BR.DWG 8.5X11

CADD DRAWING: DO NOT MAKE MANUAL REVISIONS

THESE ARE TYPICAL DRAWINGS; ACTUAL SITE CONDITIONS MAY VARY FROM THE SITE GRAPHICALLY REPRESENTED.

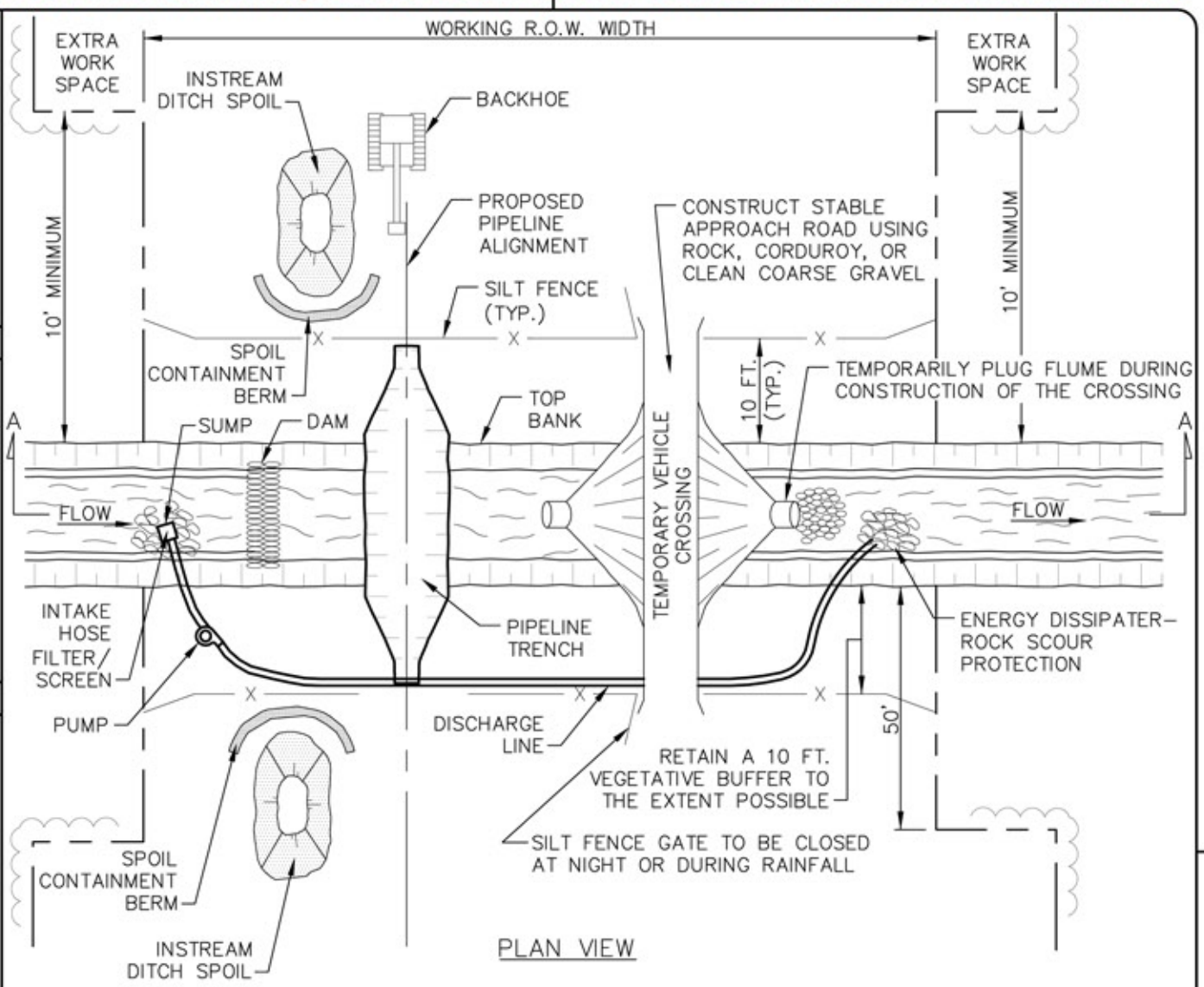

PLAN VIEW

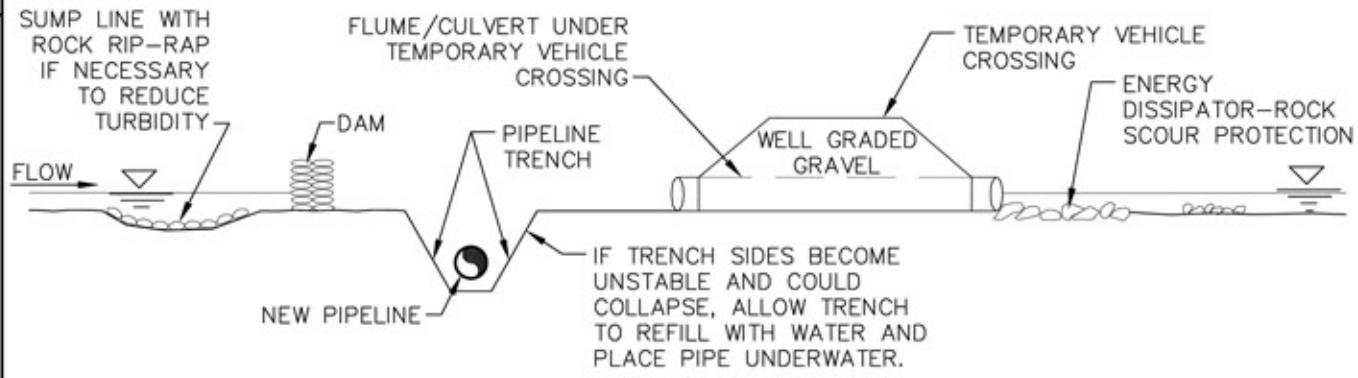

SECTION A-A

NOTES:

1. PIPELINE PLACEMENT WITHIN RIGHT-OF-WAY CONCEPTUAL ONLY.
2. SEE DETAIL 14A FOR CONSTRUCTION PROCEDURES.

REVISIONS 01 2010-10-11 REVISED TITLE BLOCK

TransCanada
In business to deliver

exp Energy Services Inc.
t: +1.850.385.5441 | f: +1.850.385.5523
1300 Metropolitan Blvd
Tallahassee, FL 32308
USA
www.exp.com

DESIGNER: JMP (NAME) 2010-10-21 (DATE)

CHECKED BY: WSF

DESIGN CHECKER: RW

P7100

KEYSTONE XL PROJECT

FIA # 4359 | CHAINAGE: | DISCIPLINE # 03

TITLE

DETAIL 14
TYPICAL DAM AND PUMP CROSSING

SCALE N.T.S. | DWG No 4359-03-ML-03-709 | REV 01

TC_A4_BR.DWG 8.5X11

CADD DRAWING: DO NOT MAKE MANUAL REVISIONS

THESE ARE TYPICAL DRAWINGS; ACTUAL SITE CONDITIONS MAY VARY FROM THE SITE GRAPHICALLY REPRESENTED.

CONSTRUCTION PROCEDURES:

1. WHERE NECESSARY, OBTAIN PRIOR APPROVAL BEFORE USING THE DAM AND PUMP METHOD.
2. IF THERE IS ANY FLOW IN THE WATERCOURSE, INSTALL PUMPS TO MAINTAIN STREAMFLOW AROUND THE BLOCKED OFF SECTIONS OF CHANNEL. THE PUMP IS TO HAVE 1.5 TIMES THE PUMPING CAPACITY OF ANTICIPATED FLOW. A SECOND STANDBY PUMP OF EQUAL CAPACITY IS TO BE READILY AVAILABLE AT ALL TIMES. AN ENERGY DISSIPATER IS TO BE BUILT TO ACCEPT PUMP DISCHARGE WITHOUT STREAMBED OR STREAMBANK EROSION. IF THE CROSSING IS PROLONGED BEYOND ONE DAY THE OPERATION NEEDS TO BE MONITORED OVERNIGHT.
3. SCHEDULE INSTREAM ACTIVITY FOR LOW FLOW PERIODS IF POSSIBLE.
4. MARK OUT AND MAINTAIN LIMITS OF AUTHORIZED WORK AREAS WITH FENCING OR FLAGGING TAPE TO AVOID UNNECESSARY DISTURBANCE OF VEGETATION. ENSURE EQUIPMENT OPERATORS WORKING ON THE CROSSING HAVE BEEN BRIEFED ABOUT THIS PLAN AND THE MEASURES NEEDED TO PROTECT WATER QUALITY. INSTALL PRE-WORK SEDIMENT CONTROL MEASURES AS SPECIFIED IN THE PLAN. ALL NECESSARY EQUIPMENT AND MATERIALS TO BUILD THE DAMS AND TO PUMP WATER MUST BE ON SITE OR READILY AVAILABLE PRIOR TO COMMENCING IN-WATER CONSTRUCTION. PIPE SHOULD BE STRUNG, WELDED AND COATED AND READY FOR INSTALLATION PRIOR TO WATERCOURSE TRENCHING.
5. CONTRACTOR SHALL SUPPLY, INSTALL AND MAINTAIN SEDIMENT CONTROL STRUCTURES, AS DEPICTED AND ALONG DOWN GRADIENT SIDES OF WORK AREAS AND STAGING AREAS SUCH THAT NO HEAVILY SILT LADEN WATER ENTERS STREAM.
   a. NO HEAVILY SILT LADEN WATER SHALL BE DISCHARGED DIRECTLY INTO THE STREAM.
   b. EROSION AND SEDIMENT CONTROL STRUCTURE LOCATIONS AS DEPICTED ARE APPROXIMATE AND MAY BE ADJUSTED AS DIRECTED BY THE COMPANY INSPECTOR TO ACTUAL SITE CONDITIONS.
   c. SILT FENCE OR STRAW BALE INSTALLATIONS SHALL INCLUDE REMOVABLE SECTIONS TO FACILITATE ACCESS DURING CONSTRUCTION. UTILIZE STRAW BALE BARRIERS ONLY IN LIEU OF A SILT FENCE WHERE FREQUENT ACCESS IS REQUIRED.
   d. SEDIMENT LADEN WATER FROM TRENCH DEWATERING SHALL BE DISCHARGED TO A WELL VEGETATED UPLAND AREA INTO A STRAW BALE DEWATERING STRUCTURE OR GEOTEXTILE FILTER BAG.
   e. SEDIMENT CONTROL STRUCTURES MUST BE IN PLACE AT ALL TIMES ACROSS THE DISTURBED PORTIONS OF THE RIGHT-OF-WAY EXCEPT DURING EXCAVATION/INSTALLATION OF THE CROSSING PIPE.
   f. SOFT DITCH PLUGS MUST REMAIN IN PLACE AT CONVENIENT LOCATIONS TO SEPARATE MAINLINE DITCH FROM THE RIVER CROSSING UNTIL THE RIVER CROSSING IS INSTALLED AND BACKFILLED.
6. TO THE EXTENT POSSIBLE, MAINTAIN A MINIMUM 10 FEET VEGETATIVE BUFFER STRIP BETWEEN DISTURBED AREAS AND THE WATERCOURSE. INSTALL AND MAINTAIN A SILT FENCE UPSLOPE OF THE BUFFER STRIP ON EACH SIDE OF THE WATERCOURSE. THE SILT FENCE SHOULD INCORPORATE REMOVABLE "GATES" AS REQUIRED TO ALLOW ACCESS WHILE MAINTAINING EASE OF REPLACEMENT FOR OVERNIGHT OR DURING PERIODS OF RAINFALL.
7. CONSTRUCT A TEMPORARY SUMP UPSTREAM OF THE DAM AND LINE WITH ROCKFILL IF A NATURAL POOL DOES NOT EXIST. INSTALL THE PUMP OR PUMP INTAKE IN THE POOL OR SUMP. DISCHARGE WATER ONTO AN ENERGY DISSIPATER DOWNSTREAM OF THE WORK AREA.
8. EXCAVATED MATERIAL MUST NOT BE STOCKPILED WITHIN 10 FT. OF THE WATERCOURSE. THIS MATERIAL MUST BE CONTAINED WITHIN BERM CONTAINMENT, WITH SECONDARY SILT FENCE PROTECTION TO PREVENT SATURATED SOIL FROM FLOWING BACK INTO THE WATERCOURSE.
9. CHEMICALS, FUELS, LUBRICATING OILS SHALL NOT BE STORED AND EQUIPMENT REFUELED WITHIN 100 FT. OF THE WATERBODY. PUMPS ARE TO BE REFUELED AS PER THE SPCC PLANS.
10. STAGING AREAS ARE TO BE LOCATED AT LEAST 10 FT. FROM THE WATER'S EDGE (WHERE TOPOGRAPHIC CONDITIONS PERMIT) AND SHALL BE THE MINIMUM SIZE NEEDED.
11. DAMS ARE TO BE MADE OF STEEL PLATE, INFLATABLE PLASTIC DAM, SAND BAGS, COBBLES, WELL GRADED COARSE GRAVEL FILL, OR ROCK FILL. DAMS MAY NEED KEYING INTO THE BANKS AND STREAMBED. ENSURE THAT THE DAM AND VEHICLE CROSSING ARE LOCATED FAR ENOUGH APART TO ALLOW FOR A WIDE EXCAVATION. CAP FLUMES USED UNDER VEHICLE CROSSING DURING DRY CROSSING.
12. DEWATER AREA BETWEEN DAMS IF POSSIBLE. DEWATERING SHOULD OCCUR IN A STABLE VEGETATIVE AREA A MINIMUM OF 50 FT. FROM ANY WATERBODY. THE PUMP DISCHARGE SHOULD BE DISCHARGED ONTO A STABLE SPILL PAD CONSTRUCTED OF ROCKFILL SANDBAGS, OR TIMBERS TO PREVENT LOCALIZED EROSION. THE DISCHARGE WATER SHOULD ALSO BE FORCED INTO SHEET FLOW IMMEDIATELY BEYOND THE SPILL PAD BY USING STRAW BALES AND THE NATURAL TOPOGRAPHY DISCHARGED WATER SHALL NOT BE ALLOWED TO FLOW INTO ANY WATERCOURSE OR WETLAND. IF IT IS NOT POSSIBLE TO DEWATER THE EXCAVATION DUE TO SOILS WITH A HIGH HYDRAULIC CONDUCTIVITY, THE EXCAVATION AND PIPE PLACEMENT IS TO BE CARRIED OUT IN THE STANDING WATER. PUMP ANY DISPLACED WATER AS DESCRIBED ABOVE TO PREVENT OVERTOPPING OF DAMS.
13. EXCAVATE TRENCH THROUGH PLUGS AND STREAMBED FROM BOTH SIDES, RE-POSITIONING DISCHARGE HOSE AS NECESSARY. LOWER THE PIPE IN THE TRENCH AND BACKFILL IMMEDIATELY. DURING THIS OPERATION WORK IS TO BE COMPLETED AS QUICKLY AS POSSIBLE.
14. CONTRACTOR SHALL RESTORE THE STREAM BED AND BANKS TO APPROXIMATE PRE-CONSTRUCTION CONTOURS, BUT NOT TO EXCEED 2 HORIZONTAL TO 1 VERTICAL.
   a. CONTRACTOR SHALL INSTALL PERMANENT EROSION AND SEDIMENT CONTROL STRUCTURES AS INDICATED ON A SITE SPECIFIC BASIS. IN THE ABSENCE OF SITE SPECIFIC INFORMATION, A FLEXIBLE CHANNEL LINER SUCH AS NAG C125 OR C350 WHICH IS CAPABLE OF WITHSTANDING ANTICIPATED FLOW SHALL BE INSTALLED. ALTERNATIVELY, ROCK RIP-RAP SHALL BE INSTALLED.
   b. ANY MATERIALS PLACED IN THE STREAM TO FACILITATE CONSTRUCTION SHALL BE REMOVED DURING RESTORATION. BANKS SHALL BE STABILIZED AND TEMPORARY SEDIMENT BARRIERS INSTALLED AS SOON AS POSSIBLE AFTER CROSSING, BUT WITHIN 24 HOURS OF COMPLETING THE CROSSING.
   c. MAINTAIN A SILT FENCE OR STRAW BALE BARRIER ALONG THE WATER COURSE UNTIL VEGETATION IS ESTABLISHED IN ADJACENT DISTURBED AREAS.
15. WHEN THE STREAMBED HAS BEEN RESTORED, THE CREEK BANKS ARE TO BE CONTOURED TO A STABLE ANGLE AND PROTECTED WITH EROSION RESISTANT MATERIAL COMPATIBLE WITH FLOW VELOCITY BETWEEN DAMS (E.G., EROSION CONTROL BLANKETS, CRIBBING, ROCK RIP-RAP, ETC.). THE DAMS ARE TO BE REMOVED DOWNSTREAM FIRST. KEEP PUMP RUNNING UNTIL NORMAL FLOW IS RESUMED. COMPLETE BANK TRIMMING AND EROSION PROTECTION. IF SANDBAGS ARE USED FOR THE DAMS, PLACE AND REMOVE BY HAND TO AVOID EQUIPMENT BREAKING BAGS.

REVISIONS | 01 REVISED TITLE | 02 2010-10-11 REVISED TITLE BLOCK

TransCanada
In business to deliver
exp Energy Services Inc.
t: +1.850.385.5441 | f: +1.850.385.5523
1300 Metropolitan Blvd
Tallahassee, FL 32308
USA
www.exp.com

DESIGNER:		KEYSTONE XL PROJECT		
JMP (NAME)	2010-10-21 (DATE)	FIA # 4359	CHAINAGE:	DISCIPLINE # 03
		TITLE: DETAIL 14A TYPICAL DAM AND PUMP CROSSING – CONSTRUCTION PROCEDURES		
CHECKED BY: WSF	DESIGN CHECKER: RW P7100	SCALE N.T.S.	DWG No 4359-03-ML-03-710	REV 02

TC_A4_BR.DWG 8.5X11

CADD DRAWING: DO NOT MAKE MANUAL REVISIONS

THESE ARE TYPICAL DRAWINGS; ACTUAL SITE CONDITIONS MAY VARY FROM THE SITE GRAPHICALLY REPRESENTED.

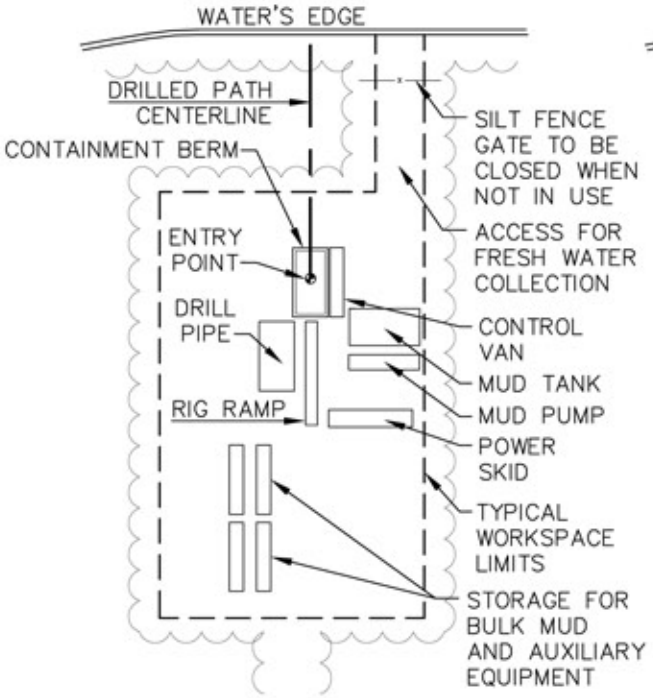

SITE PLAN
ENTRY SIDE

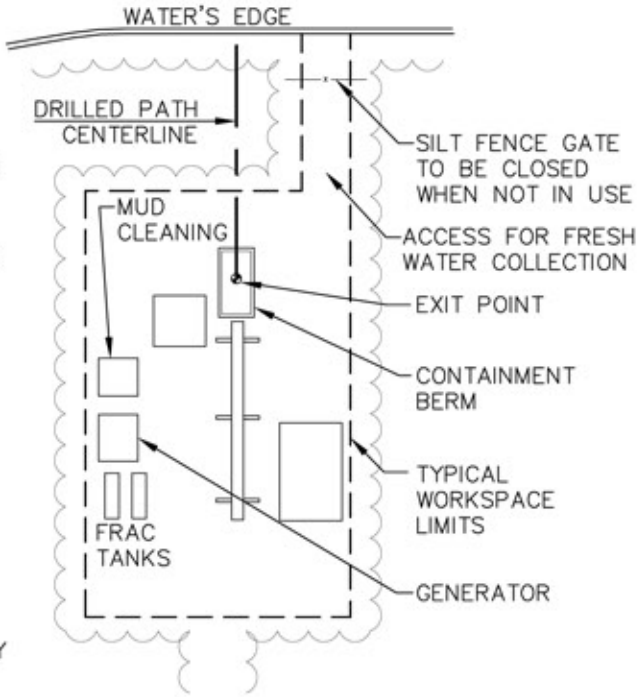

SITE PLAN
EXIT SIDE

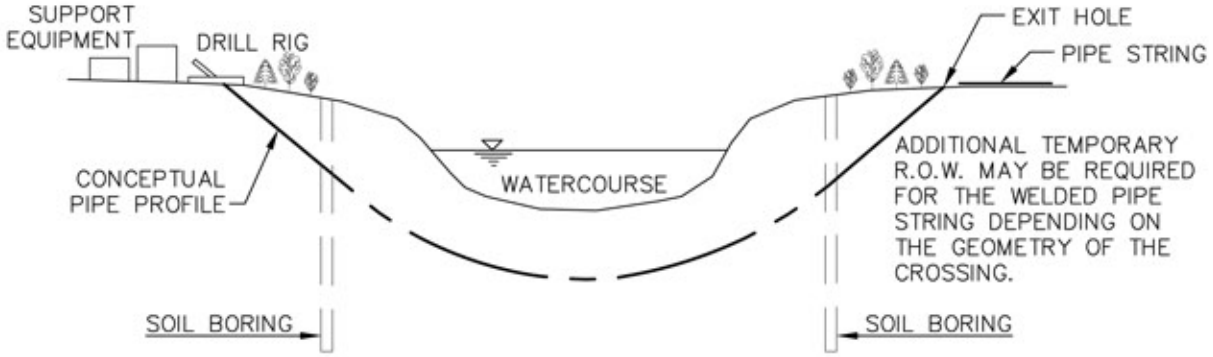

PROFILE

NOTES:

1. SET UP DRILLING EQUIPMENT A MINIMUM OF 100 FEET FROM THE EDGE OF THE WATERCOURSE. LIMIT CLEARING BETWEEN DRILL ENTRY AND EXIT POINT TO HAND CUTTING BRUSH FOR TRACKING WIRES.
2. ENSURE THAT ONLY BENTONITE-BASED DRILLING MUD IS USED.
3. INSTALL SUITABLE DRILLING MUD TANKS OR SUMPS TO PREVENT CONTAMINATION OF WATERCOURSE.
4. INSTALL BERMS DOWNSLOPE FROM THE DRILL ENTRY AND ANTICIPATED EXIT POINTS TO CONTAIN ANY RELEASE OF DRILLING MUD.
5. DISPOSE OF DRILLING MUD IN ACCORDANCE WITH THE APPROPRIATE REGULATORY AUTHORITY REQUIREMENTS.

REVISIONS
01 UPDATED DRAWING NOTES
02 2010-10-11 REVISED TITLE BLOCK

TransCanada
In business to deliver
exp Energy Services Inc.
t: +1.850.385.5441 | f: +1.850.385.5523
1300 Metropolitan Blvd
Tallahassee, FL 32308
USA
www.exp.com

DESIGNER: JMP (NAME) 2010-10-21 (DATE)	KEYSTONE XL PROJECT		
	FIA # 4359	CHAINAGE:	DISCIPLINE # 03
	TITLE: DETAIL 15 TYPICAL HORIZONTAL DRILL (HDD) SITE PLAN & PROFILE		
CHECKED BY: WSF / DESIGN CHECKER: RW P7100	SCALE N.T.S.	DWG No 4359-03-ML-03-711	REV 02

TC_A4_BR.DWG 8.5X11

CADD DRAWING: DO NOT MAKE MANUAL REVISIONS

THESE ARE TYPICAL DRAWINGS; ACTUAL SITE CONDITIONS MAY VARY FROM THE SITE GRAPHICALLY REPRESENTED.

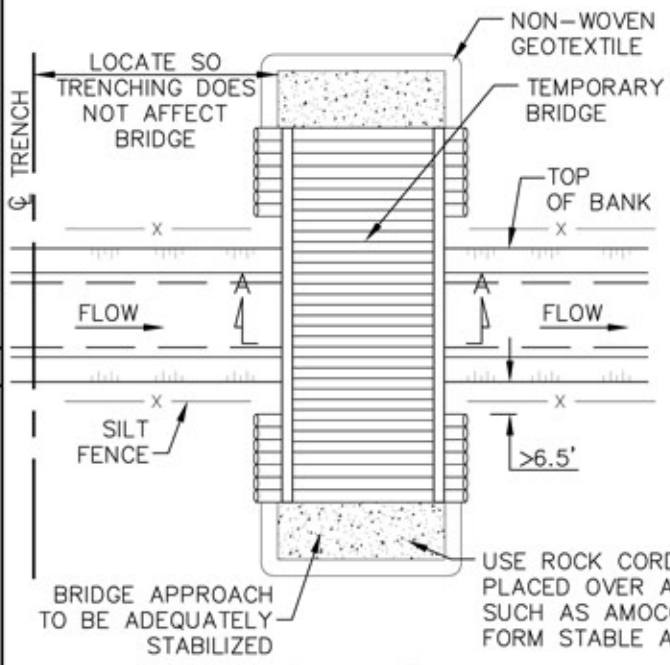

PLAN VIEW

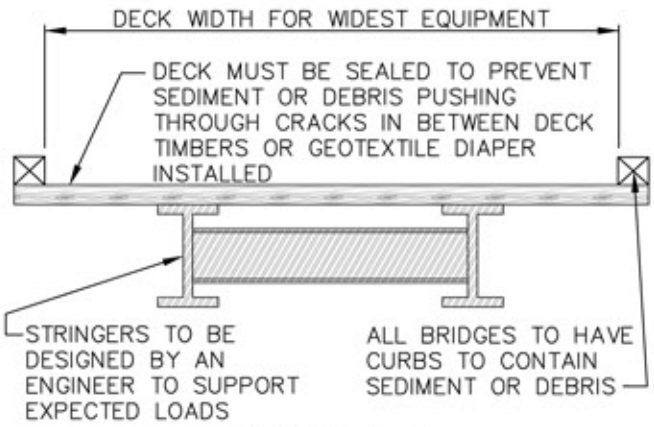

SECTION A–A

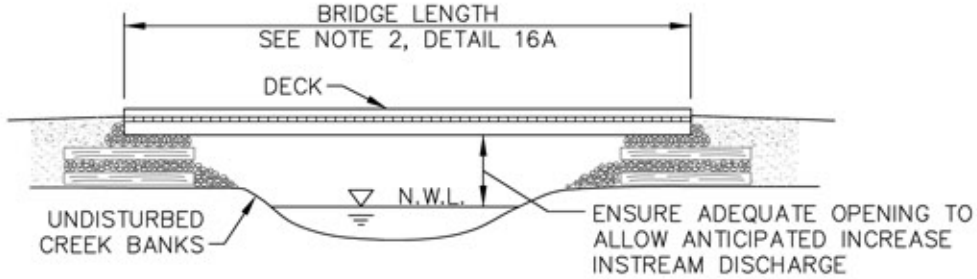

BRIDGE PROFILE

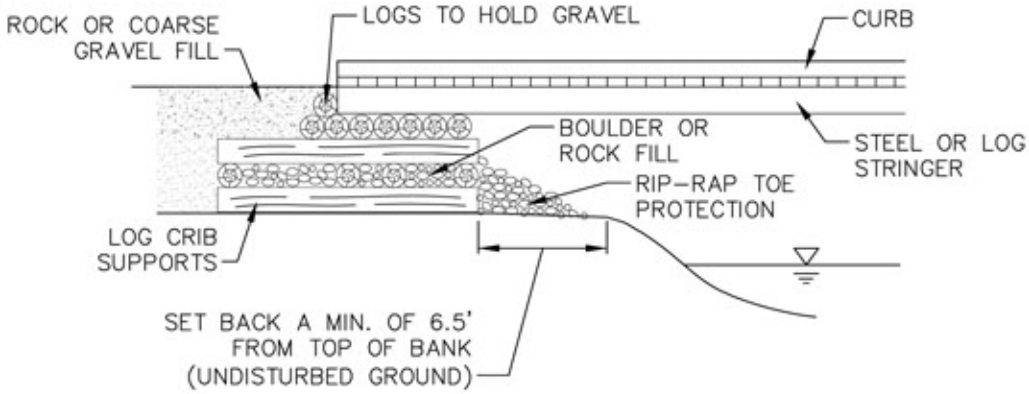

TYPICAL TEMPORARY CRIB ABUTMENT

REVISIONS 01 2010-10-11 REVISED TITLE BLOCK

TransCanada
In business to deliver

exp Energy Services Inc.
t: +1.850.385.5441 | f: +1.850.385.5523
1300 Metropolitan Blvd
Tallahassee, FL 32308
USA
www.exp.com

DESIGNER: JMP (NAME) 2010-10-21 (DATE)

CHECKED BY: WSF

DESIGN CHECKER: RW P7100

KEYSTONE XL PROJECT

FIA # 4359 | CHAINAGE: | DISCIPLINE # 03

TITLE: DETAIL 16 TYPICAL TEMPORARY BRIDGE CROSSING

SCALE N.T.S. | DWG No 4359-03-ML-03-712 | REV 01

TC_A4_BR.DWG 8.5X11

CADD DRAWING: DO NOT MAKE MANUAL REVISIONS

THESE ARE TYPICAL DRAWINGS; ACTUAL SITE CONDITIONS MAY VARY FROM THE SITE GRAPHICALLY REPRESENTED.

CONSTRUCTION PROCEDURES:

IN GENERAL TERMS, THE FOLLOWING IS A SEQUENCE OF CONSTRUCTION PROCEDURES THAT ARE RECOMMENDED TO BE FOLLOWED FOR TEMPORARY BRIDGE CROSSINGS:

1. A PORTABLE BRIDGE, FLEXI-FLOAT OR FLUMED VEHICLE CROSSING MAY BE SUBSTITUTED FOR THE TEMPORARY BRIDGE. IT IS IMPORTANT THAT THE SIZE OF THE TOTAL OPENING BE SELECTED SO THE STRUCTURE CAN SAFELY PASS FLOOD FLOWS THAT CAN REASONABLY BE EXPECTED TO OCCUR DURING THE LIFE OF THE CROSSING.

2. DETERMINE BRIDGE LENGTH REQUIRED AND FOLLOW EITHER METHOD A) OR B) FOR DETERMINING THE OPENING SIZE. IF A) IS FOLLOWED, A MINIMUM 6.5 FT. SETBACK FROM TOP OF BANK MUST BE PRESERVED AS A "NO DISTURBANCE AREA". IF ABUTMENTS OR PIERS IN THE STREAMBED ARE REQUIRED, METHOD B) IS TO BE FOLLOWED.

3. INSTALL THE BRIDGE IN A MANNER THAT WILL MINIMIZE SEDIMENT ENTERING THE WATER. STRINGERS MUST BE DESIGNED TO SUPPORT THE LOADS EXPECTED ON THE BRIDGE. CURBS MUST BE INSTALLED ALONG THE EDGE OF THE DECK TO CONTAIN SEDIMENT AND DEBRIS ON THE BRIDGE. FASTENERS CONNECTING COMPONENTS MUST BE STRONG ENOUGH TO HOLD THEM IN POSITION DURING THE LIFE OF THE BRIDGE. CRIBS ARE TO BE FILLED WITH ROCK OR COBBLE. RIP-RAP EROSION PROTECTION IS TO BE PLACED AROUND THE CRIBS AND ON ANY FILL SLOPES PROJECTING INTO THE WATERBODY.

4. ROAD APPROACHES LEADING TO THE BRIDGE MUST BE RAISED AND STABLE SO EQUIPMENT LOADS ARE SUPPORTED A SUFFICIENT DISTANCE BACK FROM THE WATER TO REDUCE SEDIMENT AND DEBRIS ENTERING THE WATERBODY FROM EQUIPMENT TRACKS. THIS MAY REQUIRE USING MATERIALS SUCH AS GRAVEL, ROCK OR CORDUROY. DO NOT USE SOIL TO CONSTRUCT OR STABILIZE EQUIPMENT BRIDGES. IF CUTS ARE NEEDED TO OBTAIN A SATISFACTORY GRADE, THEY ARE TO BE DUG WITH SIDE DITCHES AND STABLE SLOPES. EROSION AND SEDIMENT CONTROL MEASURES ARE TO BE INSTALLED TO KEEP SEDIMENT ON LAND (E.G., SILT FENCING, FILTER CLOTH, RIP-RAP, SEED AND MULCH, ETC.)

5. MAINTAIN A SILT FENCE ON EACH SIDE OF THE WATERBODY EXTENDING A MINIMUM OF 10 FEET BEYOND THE WIDTH OF DISTURBANCE UNTIL VEGETATION HAS BEEN ESTABLISHED IN UPSLOPE AREAS.

6. PERIODICALLY CHECK BRIDGE INSTALLATION AND REMOVE ANY BUILD-UP OF SEDIMENT OR DEBRIS ON THE BRIDGE. DISPOSE OF THIS MATERIAL IN A LOW LYING AREA AT LEAST 100 FEET FROM THE WATERBODY.

7. REMOVE TEMPORARY CROSSINGS AS SOON AS POSSIBLE AFTER FINAL CLEAN-UP. MATERIALS PLACED ALONG THE WATERBODY SHOULD BE COMPLETELY REMOVED DURING FINAL CLEAN-UP. REMOVAL SHOULD NOT OCCUR OUTSIDE THE CONSTRUCTION WINDOWS. SURPLUS GRAVEL IS TO BE SPREAD ON THE RIGHT-OF-WAY AS GRAVEL SHEETING, IF GRADATION IS SUITABLE, OR MOVED AT LEAST 100 FEET FROM TOP OF BANK FOR DISPOSAL. BRIDGE MATERIALS ARE TO BE REMOVED FROM THE CROSSING AREA. THE WATERBODY BED AND BANKS ARE TO BE RESTORED TO A STABLE ANGLE AND PROTECTED WITH EROSION RESISTANT MATERIAL COMPATIBLE WITH THE EXPECTED FLOW CONDITIONS.

REVISIONS 01 2010-10-11 REVISED TITLE BLOCK

TransCanada
In business to deliver
exp Energy Services Inc.
t: +1.850.385.5441 | f: +1.850.385.5523
1300 Metropolitan Blvd
Tallahassee, FL 32308
USA
www.exp.com

DESIGNER:		KEYSTONE XL PROJECT		
JMP (NAME)	2010-10-21 (DATE)	FIA # 4359	CHAINAGE:	DISCIPLINE # 03
		TITLE: DETAIL 16A TYPICAL TEMPORARY BRIDGE CROSSING – CONSTRUCTION PROCEDURES		
CHECKED BY: WSF	DESIGN CHECKER: RW P7100	SCALE N.T.S.	DWG No 4359-03-ML-03-713	REV 01

TC_A4_BR.DWG 8.5X11

CADD DRAWING: DO NOT MAKE MANUAL REVISIONS

THESE ARE TYPICAL DRAWINGS; ACTUAL SITE CONDITIONS MAY VARY FROM THE SITE GRAPHICALLY REPRESENTED.

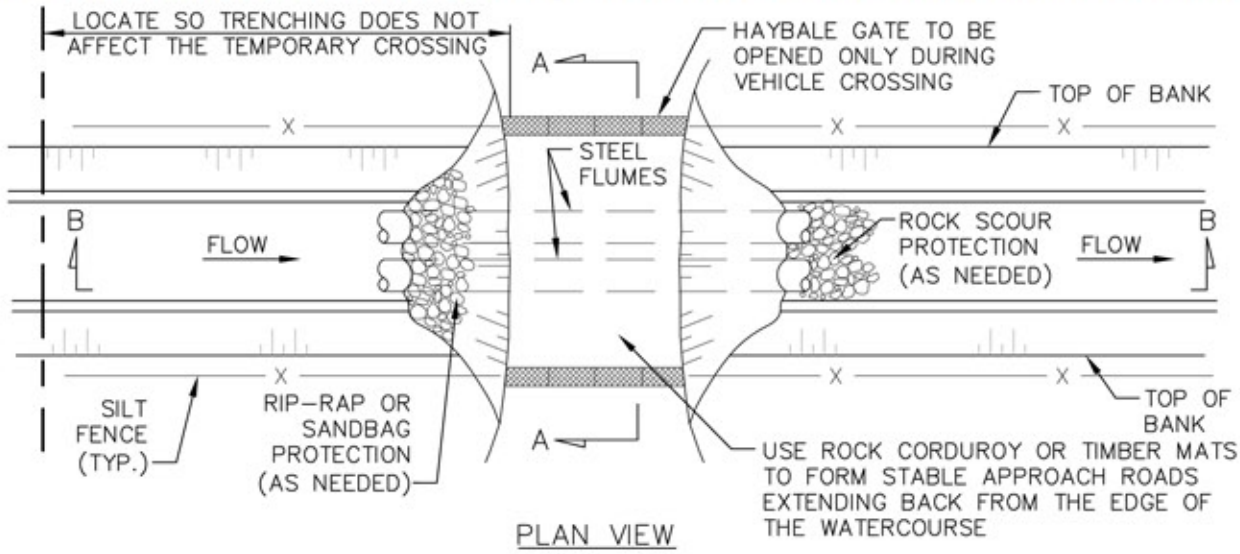

PLAN VIEW

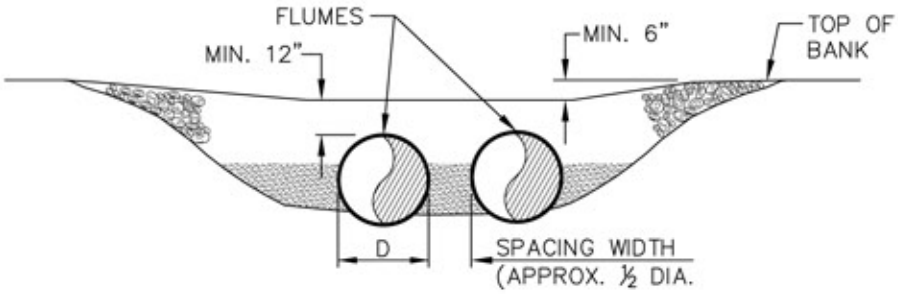

SECTION A–A

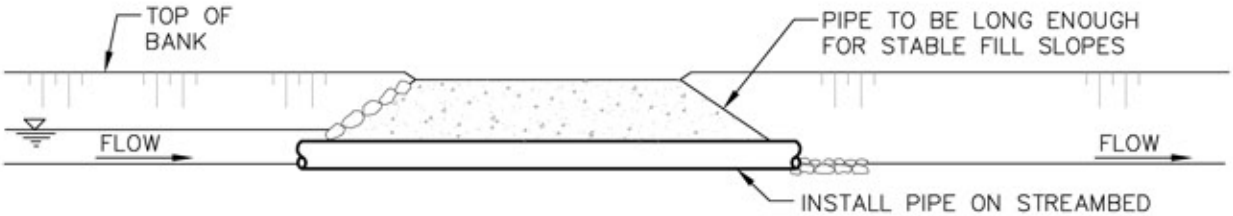

SECTION B–B

CONSTRUCTION PROCEDURES:

THE FOLLOWING IS A SEQUENCE OF CONSTRUCTION AND PROCEDURES MEASURES TO BE FOLLOWED AT ALL TEMPORARY FLUME VEHICLE CROSSINGS.

1. A PORTABLE FLEXI–FLOAT, OR TEMPORARY BRIDGE MAY BE SUBSTITUTED FOR THE TEMPORARY FLUME CROSSING.
2. THE LENGTH OF THE FLUME SHALL BE SUFFICIENT TO SPAN THE ENTIRE AREA REQUIRED FOR VEHICULAR ACCESS, EXTENDING 4 FEET BEYOND TOE OF FILL MATERIAL, SO TRENCHING WILL NOT AFFECT THE ROAD CROSSING. A LONGER PIPE IS TO BE USED, IF NEEDED, TO MAINTAIN STABLE SIDE SLOPES. FLUME CAPACITY TO BE BASED ON THE 2–YEAR DESIGN FLOW OR MAXIMUM FLOW ANTICIPATED TO OCCUR DURING INSTALLATION, AS SPECIFIED IN CONSTRUCTION DOCUMENTS.
3. WHERE PRACTICAL, BACKFILL AROUND THE PIPES AT THE ROAD WITH CLEAN, COARSE ROCK FILL MATERIAL. IF SCOUR IS POSSIBLE, RIP–RAP IS TO BE PLACED ON THE WATERBODY BED DOWNSTREAM OF THE PIPE OUTLET EXTENDING A MINIMUM OF TWO PIPE DIAMETERS. ALTERNATIVELY, TIMBER EQUIPMENT MATS, SAND BAGS OR TIMBER CORDUROY MAY BE USED TO FORM THE TRAVEL SURFACE.
4. TO REDUCE DEBRIS ENTERING THE WATERBODY FROM EQUIPMENT TRACKS, THE APPROACH ROAD LEADING TO THE CULVERT CROSSING MUST BE RAISED AND STABLE SO EQUIPMENT LOADS ARE SUPPORTED A SUFFICIENT DISTANCE BACK FROM THE WATER. IF CUTS ARE NEEDED TO OBTAIN A SATISFACTORY GRADE, THEY ARE TO BE DUG WITH SIDE DITCHES AND STABLE SLOPES. EROSION AND SEDIMENT CONTROL MEASURES ARE TO BE INSTALLED TO LIMIT THE POTENTIAL FOR SEDIMENT TO ENTER THE WATERBODY (E.G., CHECK DAMS, SILT FENCE, RIP–RAP, SEED AND MULCH, SEDIMENT TRAPS, ETC.).
5. PERIODICALLY CHECK THE TEMPORARY CROSSING INSTALLATION AND REMOVE ANY BUILD–UP OF SEDIMENT OR DEBRIS ON THE BRIDGE. DISPOSE OF THIS MATERIAL AT LEAST 100 FEET FROM THE WATERBODY AND ABOVE THE HIGH WATER LEVEL.
6. FOLLOWING COMPLETION OF THE CROSSING, REMOVE ROCKFILL IN/OR AROUND FLUME PIPES FROM THE WATERBODY OR WETLAND.
7. RESTORE STREAM BANKS AND WATERBODY BOTTOM.

REVISIONS 01 2010–10–11 REVISED TITLE BLOCK

TransCanada
In business to deliver

exp Energy Services Inc.
t: +1.850.385.5441 | f: +1.850.385.5523
1300 Metropolitan Blvd
Tallahassee, FL 32308
USA
www.exp.com

DESIGNER:		KEYSTONE XL PROJECT		
JMP (NAME) 2010–10–21 (DATE)		FIA # 4359	CHAINAGE:	DISCIPLINE # 03
		TITLE: DETAIL 17 TYPICAL FLUME BRIDGE CROSSING		
CHECKED BY: WSF	DESIGN CHECKER: RW P7100	SCALE N.T.S.	DWG No 4359–03–ML–03–714	REV 01

TC_A4_BR.DWG 8.5X11

CADD DRAWING: DO NOT MAKE MANUAL REVISIONS

THESE ARE TYPICAL DRAWINGS; ACTUAL SITE CONDITIONS MAY VARY FROM THE SITE GRAPHICALLY REPRESENTED.

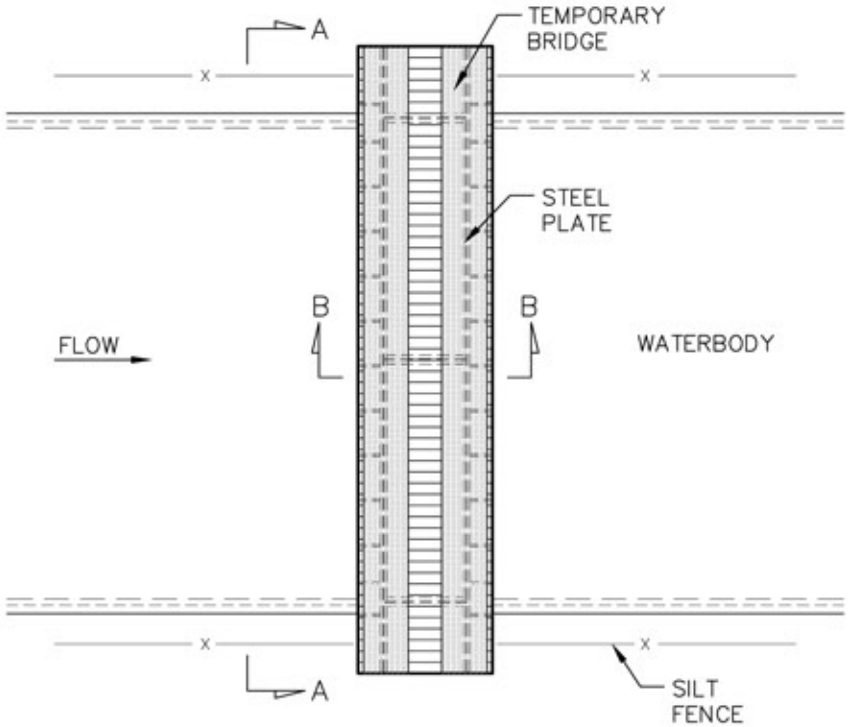

PLAN VIEW

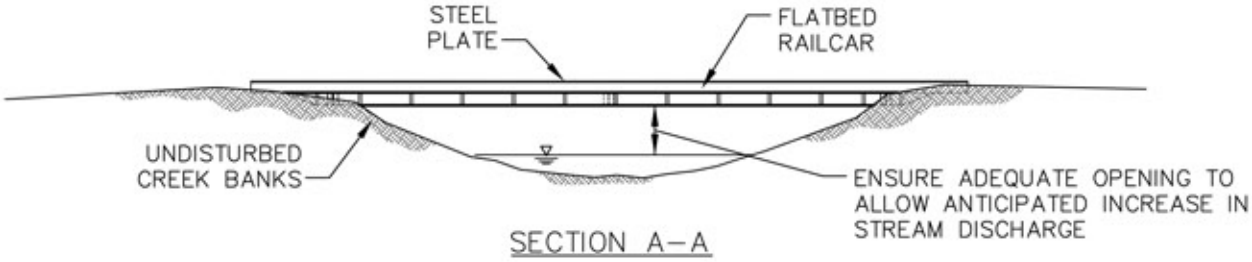

SECTION A–A

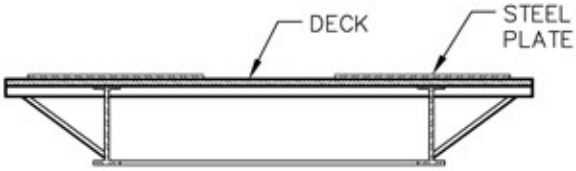

SECTION B–B

REVISIONS 01 2010–10–11 REVISED TITLE BLOCK

TransCanada
In business to deliver

exp Energy Services Inc.
t: +1.850.385.5441 | f: +1.850.385.5523
1300 Metropolitan Blvd
Tallahassee, FL 32308
USA
www.exp.com

DESIGNER: JMP (NAME) 2010–10–21 (DATE)	KEYSTONE XL PROJECT		
	FIA # 4359	CHAINAGE:	DISCIPLINE # 03
	TITLE: DETAIL 18 TYPICAL RAILCAR BRIDGE CROSSING		
CHECKED BY: WSF	DESIGN CHECKER: RW P7100	SCALE N.T.S.	DWG No 4359–03–ML–03–715 REV 01

TC_A4_BR.DWG 8.5X11

CADD DRAWING: DO NOT MAKE MANUAL REVISIONS

THESE ARE TYPICAL DRAWINGS; ACTUAL SITE CONDITIONS MAY VARY FROM THE SITE GRAPHICALLY REPRESENTED.

CONSTRUCTION PROCEDURES:

1. THIS TYPICAL DRAWING PROVIDES FOR A RAILCAR BRIDGE EQUIPMENT CROSSING.

2. BRIDGE SHOULD BE A MINIMUM OF 12 FEET LONGER THAN BANK TO BANK WIDTH.

3. BEST MANAGEMENT PRACTICES UTILIZING EROSION CONTROL DEVICES, SUCH AS HAY BALES AND SILT FENCE ARE REQUIRED TO PREVENT SEDIMENTATION OF THE STREAM. EROSION PROTECTION SHALL BE PLACED ON THE STREAM BANKS.

4. DURING FINAL CLEAN-UP, REMOVE TEMPORARY EQUIPMENT CROSSINGS AS SOON AS POSSIBLE. INSTALLED MATERIALS, SUCH AS HAY BALES AND SILT FENCE MUST BE REMOVED AND DISPOSED IN ACCORDANCE WITH STATE AND LOCAL REGULATIONS AND REQUIREMENTS. THE STREAMBED, BANKS AND AREAS AFFECTED BY CONSTRUCTION OF THE TEMPORARY EQUIPMENT CROSSING SHOULD BE RESTORED TO A STABLE CONDITION. IF REQUIRED TO PREVENT TRANSPORT OF SEDIMENTATION TO THE STREAM, SILT FENCE SHOULD BE INSTALLED AT THE TOP OF THE BANKS.

REVISIONS 01 2010-10-11 REVISED TITLE BLOCK

TransCanada
In business to deliver
exp Energy Services Inc.
t: +1.850.385.5441 | f: +1.850.385.5523
1300 Metropolitan Blvd
Tallahassee, FL 32308
USA
www.exp.com

DESIGNER: JMP (NAME) 2010-10-21 (DATE)

CHECKED BY: WSF

DESIGN CHECKER: RW P7100

KEYSTONE XL PROJECT

FIA # 4359 | CHAINAGE: | DISCIPLINE # 03

TITLE: DETAIL 18A
TYPICAL RAILCAR BRIDGE CROSSING – CONSTRUCTION PROCEDURES

SCALE N.T.S. | DWG No 4359-03-ML-03-716 | REV 01

TC_A4_BR.DWG 8.5X11

CADD DRAWING: DO NOT MAKE MANUAL REVISIONS

THESE ARE TYPICAL DRAWINGS; ACTUAL SITE CONDITIONS MAY VARY FROM THE SITE GRAPHICALLY REPRESENTED.

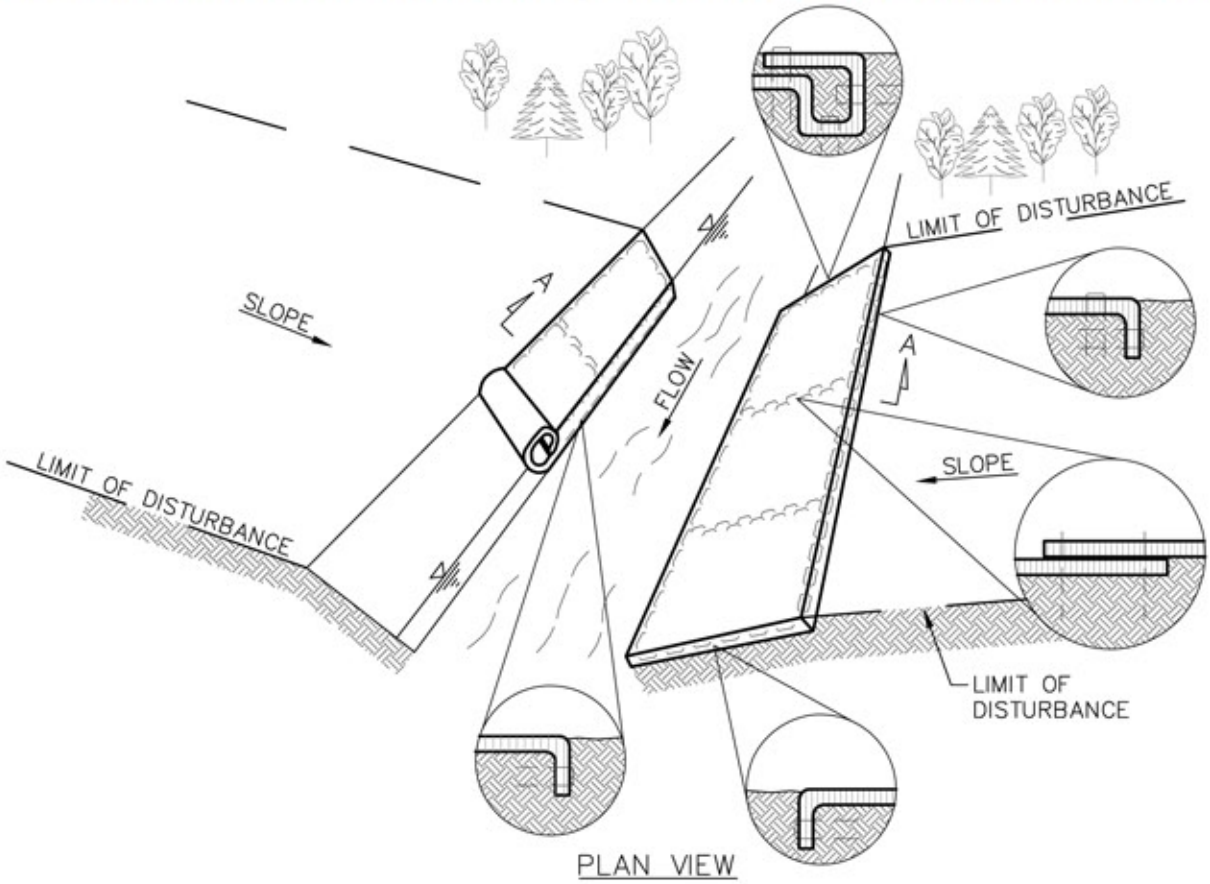

PLAN VIEW

SECTION A–A

NOTES:

1. INSTALL AND ANCHOR LINERS FOLLOWING MANUFACTURER'S INSTRUCTIONS.
2. PREPARE SOIL BEFORE INSTALLING CHANNEL LINER, INCLUDING THE APPLICATION OF
3. SEED. CHANNEL LINERS SHOULD EXTEND COMPLETELY ACROSS DISTURBED BANK AREAS TO PROTECT ERODIBLE SURFACES.
4. BEGIN AT THE END OF THE CHANNEL BY ANCHORING THE LINER IN A TRENCH. BACKFILL AND COMPACT THE TRENCH AFTER STAPLING.
5. ROLL LINER IN DIRECTION OF WATER FLOW.
6. INSTALL LINERS END–OVER–END (SHINGLE STYLE) WITH OVERLAP USING A DOUBLE ROW OF STAGGERED STAPLES 4 INCHES BELOW THE FIRST ROW IN A STAGGERED PATTERN.
7. IN HIGH FLOW CHANNEL APPLICATIONS, A STAPLE CHECK SLOT IS RECOMMENDED AT 30 TO 40 FEET INTERVALS. USE A ROW OF STAPLES 4 INCHES BELOW THE FIRST ROW IN A STAGGERED PATTERN.
8. INSTALL CHANNEL LINER TO THE TOP OF THE DEFINED CHANNEL SECTION. TWO OR MORE ROWS OF BLANKETS MAY BE NECESSARY, THESE LINERS MUST BE OVERLAPPED 4 INCHES AND STAPLED.
9. THE CHANNEL LINER SHOULD EXTEND TO THE BASE OF THE CHANNEL AND STAPLED. FOR CHANNELS WITH VERY LITTLE OR NO FLOW, EXTEND A MINIMUM OF 1 FOOT BELOW THE LOW WATER LEVEL AND STAPLE IN PLACE.
10. INSTALLATION SPECIFICATIONS TO BE MODIFIED AS NECESSARY TO SUIT ACTUAL SITE CONDITIONS.

REVISIONS
01 2008–11–04 UPDATED DRAWING NOTES
02 2010–10–11 REVISED TITLE BLOCK

TransCanada
In business to deliver

exp Energy Services Inc.
t: +1.850.385.5441 | f: +1.850.385.5523
1300 Metropolitan Blvd
Tallahassee, FL 32308
USA
www.exp.com

DESIGNER:		KEYSTONE XL PROJECT		
JMP (NAME)	2010–10–21 (DATE)	FIA # 4359	CHAINAGE:	DISCIPLINE # 03
		TITLE: DETAIL 19 FLEXIBLE CHANNEL LINER INSTALLATION		
CHECKED BY: WSF	DESIGN CHECKER: RW P7100	SCALE N.T.S.	DWG No 4359–03–ML–05–708	REV 02

TC_A4_BR.DWG 8.5X11

CADD DRAWING: DO NOT MAKE MANUAL REVISIONS

THESE ARE TYPICAL DRAWINGS; ACTUAL SITE CONDITIONS MAY VARY FROM THE SITE GRAPHICALLY REPRESENTED.

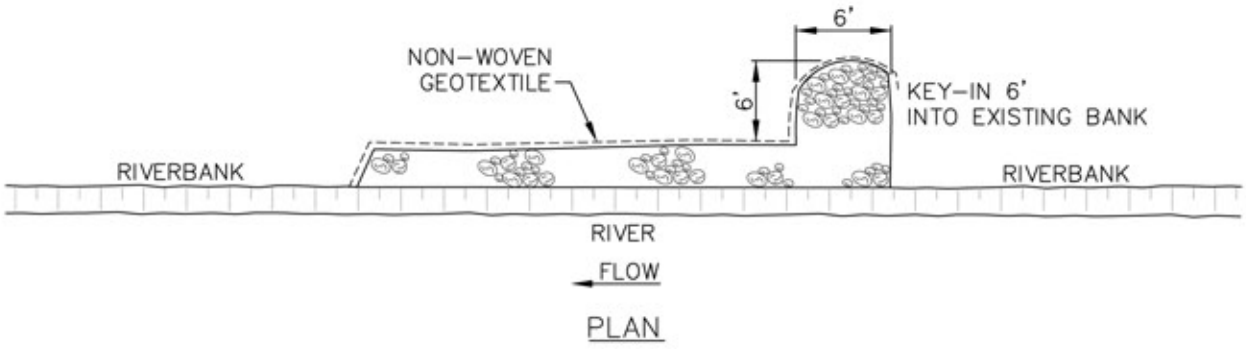

PLAN

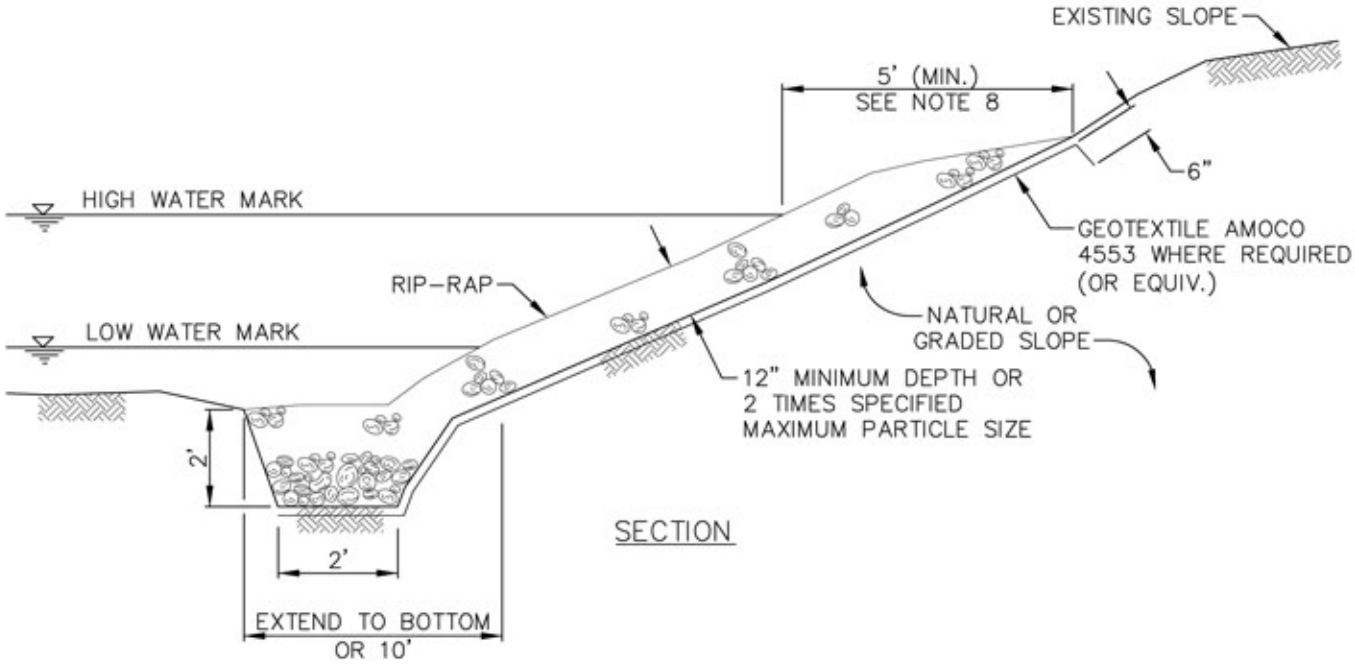

SECTION

NOTES:

1. REMOVE ALL STUMPS, ORGANIC MATERIAL AND PREPARE BANKS TO A STABLE CONFIGURATION TO A MAXIMUM SLOPE OF 2 HORIZONTAL TO 1 VERTICAL.
2. CONSTRUCT TOE TRENCH TO KEY IN BOTTOM OF RIP-RAP PROTECTION.
3. INSTALL FILTER CLOTH (GEOTEXTILE), SUCH AS AMOCO 4553 OR EQUIVALENT, UNDER ROCK WHERE SPECIFIED OR AS DIRECTED BY THE COMPANY. ADJOINING EDGES OF CLOTH SHALL OVERLAP A MINIMUM OF 12".
4. ROCK UTILIZED FOR RIP-RAP SHALL CONSIST OF SOUND, DURABLE ROCK, AND RESISTANT TO WEATHERING. INDIVIDUAL PIECES SHOULD BE ANGULAR, BLOCK SHAPED AND HAVE A MINIMUM SPECIFIC GRAVITY OF 2.2.
5. INSTALL RIP-RAP TO A THICKNESS OF APPROXIMATELY 2 TIMES THE MAXIMUM EQUIVALENT DIAMETER OF THE RIP-RAP. EACH LOAD SHOULD BE WELL GRADED. A WELL GRADED MIXTURE IS COMPOSED 60% (MINIMUM) OF LARGER SIZES WITH 40% OF SMALLER SIZES TO FILL THE VOIDS.
6. SIZE OF RIP-RAP IS DEPENDENT UPON THE PREDICTED FLOW CONDITIONS.
7. KEY IN THE EDGES OF THE RIP-RAP AND FILTER CLOTH TO NATURAL GROUND CONTOURS SO THAT UNDERMINING DOES NOT OCCUR.
8. RIP-RAP IS TO BE INSTALLED TO 2 FEET. ABOVE THE NORMAL HIGH WATER MARK OR 5 FEET ALONG THE SLOPE, WHICHEVER IS LESS.
9. INSTALLATION SPECIFICATIONS TO BE MODIFIED TO SUIT ACTUAL SITE CONDITIONS.

REVISIONS
01 2008-11-04 UPDATED DRAWING NOTES
02 2010-10-11 REVISED TITLE BLOCK

TransCanada
In business to deliver

exp Energy Services Inc.
t: +1.850.385.5441 | f: +1.850.385.5523
1300 Metropolitan Blvd
Tallahassee, FL 32308
USA
www.exp.com

DESIGNER: JMP (NAME) 2010-10-21 (DATE)

CHECKED BY: WSF

DESIGN CHECKER: RW

P7100

KEYSTONE XL PROJECT

FIA # 4359 | CHAINAGE: | DISCIPLINE # 03

TITLE: DETAIL 20 TYPICAL ROCK RIP-RAP

SCALE: N.T.S. | DWG No: 4359-03-ML-05-709 | REV: 02

TC_A4_BR.DWG 8.5X11

CADD DRAWING: DO NOT MAKE MANUAL REVISIONS

THESE ARE TYPICAL DRAWINGS; ACTUAL SITE CONDITIONS MAY VARY FROM THE SITE GRAPHICALLY REPRESENTED.

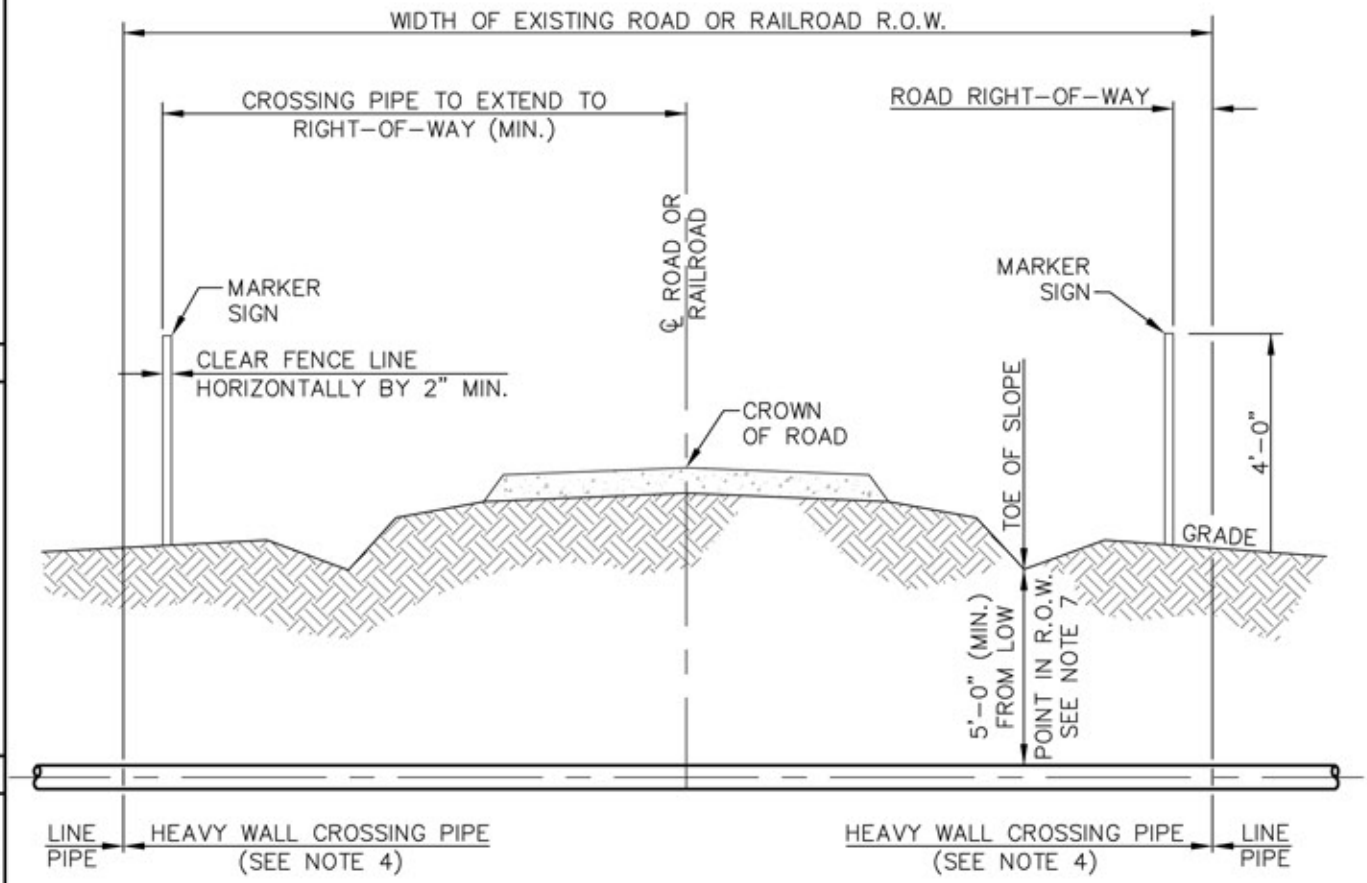

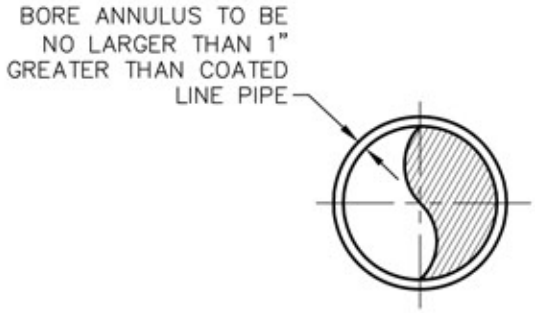

NOTES:

1. CROSSINGS SHALL BE IN ACCORDANCE WITH APPLICABLE PERMIT.
2. ROAD CROSSING PIPE SHALL EXTEND AT MINIMUM TO RIGHT-OF-WAY LINE UNLESS OTHERWISE SPECIFIED.
3. THE TYPE AND MINIMUM REQUIRED LENGTH OF PIPE FOR CROSSINGS OF ROADS SHALL BE AS SPECIFIED ON ALIGNMENT SHEETS.
4. PIPE FOR BORED CROSSINGS TO INCLUDE ABRASION-RESISTANT (ARB) COATING.
5. PIPELINE MARKER AND TEST STATIONS TO BE INSTALLED ON RIGHT-OF-WAY LINE NEXT TO FENCE IF POSSIBLE.
6. THE CROSSING PIPE SHALL BE STRAIGHT WITH NO VERTICAL OR HORIZONTAL BENDS WITHIN ROAD RIGHT-OF-WAY.
7. MINIMUM PIPELINE COVER IN DRAINAGE DITCHES AT PUBLIC ROADS IS 60 INCHES; 36 INCHES IN CONSOLIDATED ROCK.

REVISIONS
01 REVISED DIMENSION
02 2010-10-11 REVISED TITLE BLOCK

TransCanada
In business to deliver
exp Energy Services Inc.
t: +1.850.385.5441 | f: +1.850.385.5523
1300 Metropolitan Blvd
Tallahassee, FL 32308
USA
www.exp.com

DESIGNER: JMP (NAME) 2010-10-21 (DATE)	KEYSTONE XL PROJECT		
	FIA # 4359	CHAINAGE:	DISCIPLINE # 03
	TITLE: DETAIL 21 TYPICAL UNCASED ROAD/RAILROAD CROSSING BORE DETAIL		
CHECKED BY: WSF	DESIGN CHECKER: RW P7100	SCALE N.T.S.	DWG No 4359-03-ML-03-717 REV 02

TC_A4_BR.DWG 8.5X11

CADD DRAWING: DO NOT MAKE MANUAL REVISIONS

THESE ARE TYPICAL DRAWINGS; ACTUAL SITE CONDITIONS MAY VARY FROM THE SITE GRAPHICALLY REPRESENTED.

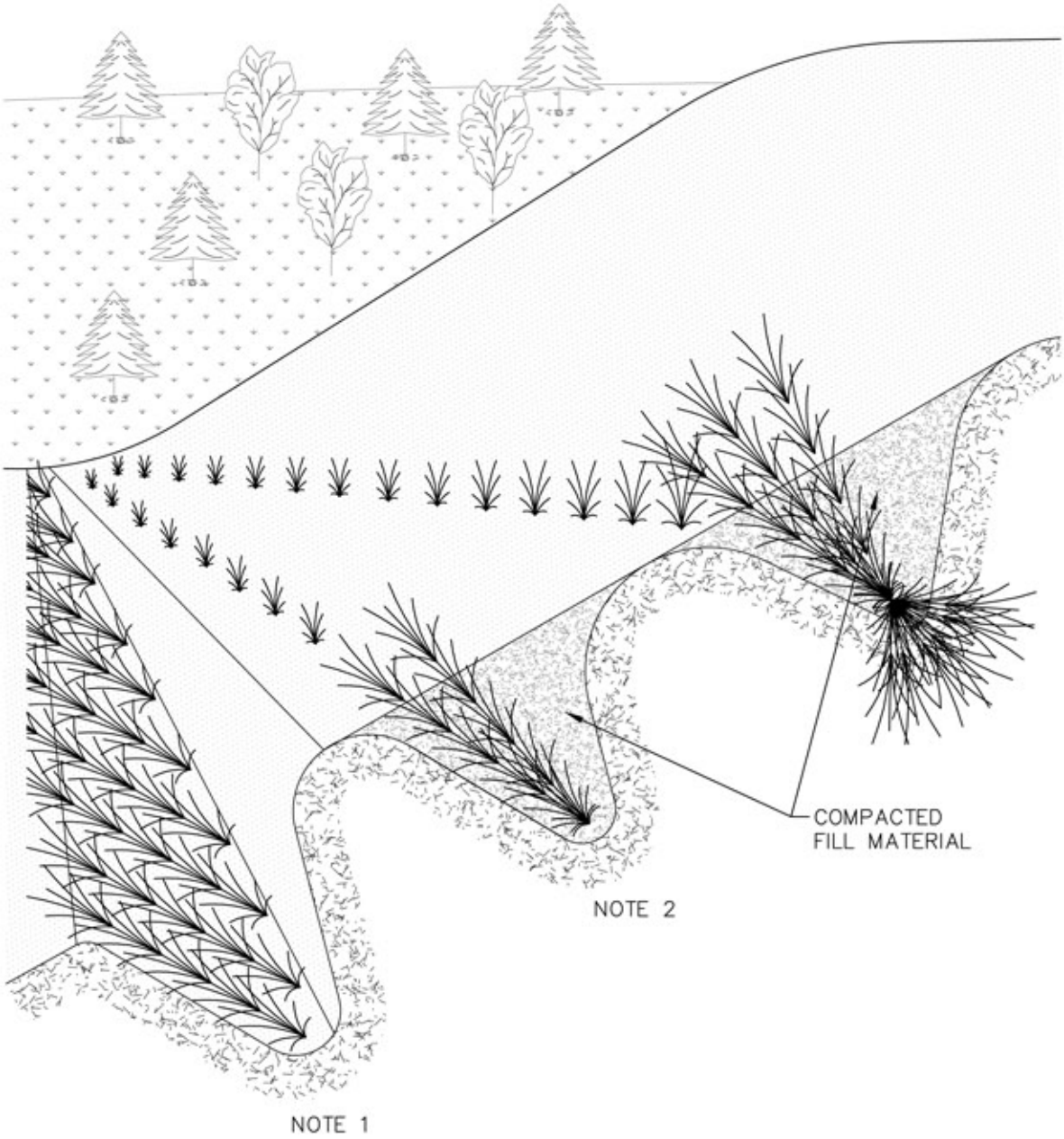

NOTES:

1. CUT TRENCH ACROSS SLOPE. FILL WITH DORMANT WOODY PLANT MATERIAL.
2. FILL IS PLACED ON TOP OF BRANCH LAYER AND COMPACTED.
3. INSTALLATION SPECIFICATIONS TO BE MODIFIED AS NECESSARY TO SUIT SITE CONDITIONS.

REVISIONS
01 2008-11-04 UPDATED DRAWING NOTES
02 2010-10-11 REVISED TITLE BLOCK

TransCanada
In business to deliver

exp Energy Services Inc.
t: +1.850.385.5441 | f: +1.850.385.5523
1300 Metropolitan Blvd
Tallahassee, FL 32308
USA
www.exp.com

DESIGNER: JMP (NAME) 2010-10-21 (DATE)

CHECKED BY: WSF

DESIGN CHECKER: RW

P7100

KEYSTONE XL PROJECT

FIA # 4359 | CHAINAGE: | DISCIPLINE # 03

TITLE
DETAIL 22
STREAMBANK RECLAMATION –
BRUSH LAYER IN CROSS CUT SLOPE

SCALE N.T.S. | DWG No 4359-03-ML-05-710 | REV 02

TC_A4_BR.DWG 8.5X11

CADD DRAWING: DO NOT MAKE MANUAL REVISIONS

THESE ARE TYPICAL DRAWINGS; ACTUAL SITE CONDITIONS MAY VARY FROM THE SITE GRAPHICALLY REPRESENTED.

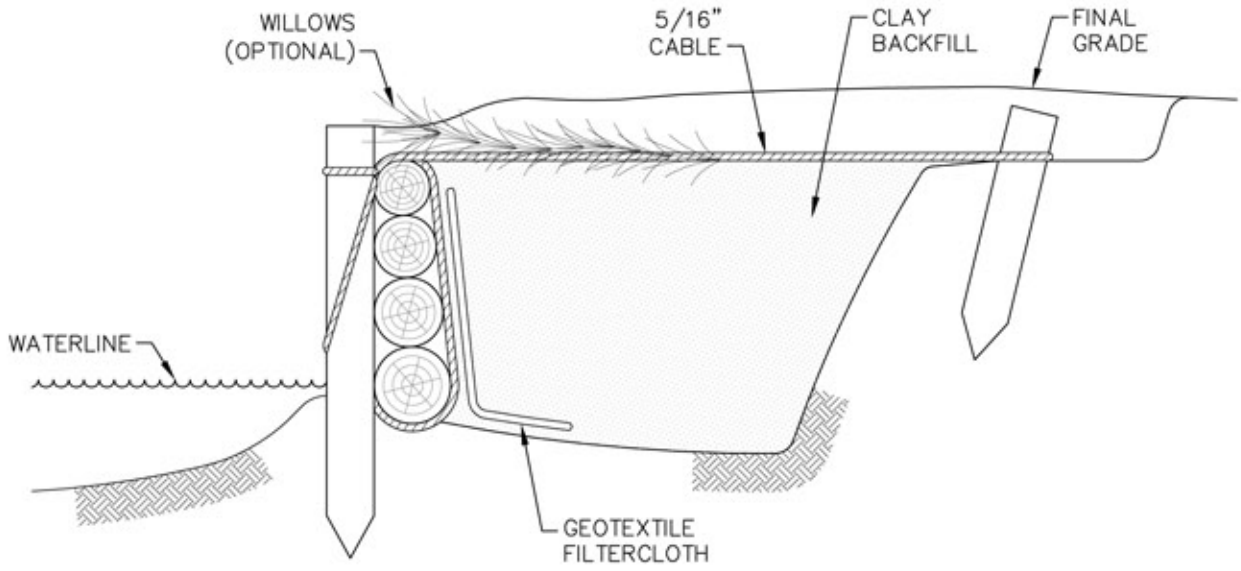

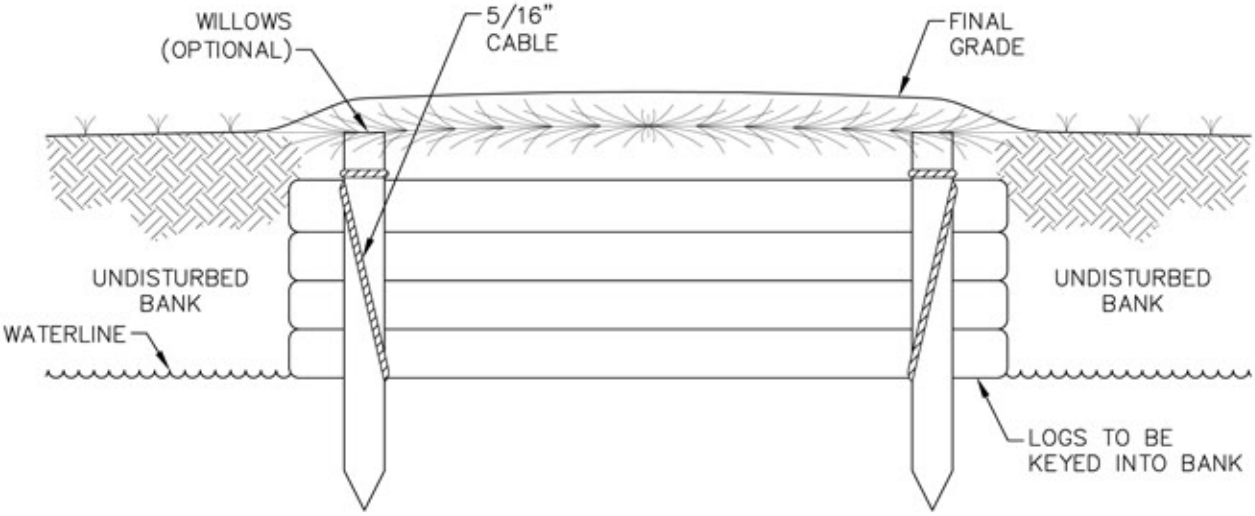

NOTES:

1. LOG WALLS TO BE CONSTRUCTED USING CONIFEROUS MATERIAL.
2. NATURE BACKFILL OR LOOSE GRADE MATERIAL SHOULD BE USED AS FILL MATERIAL.
3. ANCHOR PILINGS OR DEADMAN ANCHORS TO BE USED TO SECURE CABLE IN BANK.
4. NON-WOVEN FILTER CLOTH (NYLEX C34 OR EQUIVALENT) TO BE USED TO LINE LOG WALL.
5. INSTALLATION SPECIFICATIONS TO BE MODIFIED AS NECESSARY TO SUIT ACTUAL SITE CONDITIONS.

REVISIONS
01 2008-11-04 UPDATED DRAWING NOTES
02 2010-10-11 REVISED TITLE BLOCK

TransCanada
In business to deliver

exp Energy Services Inc.
t: +1.850.385.5441 | f: +1.850.385.5523
1300 Metropolitan Blvd
Tallahassee, FL 32308
USA
www.exp.com

DESIGNER: JMP (NAME) 2010-10-21 (DATE)	KEYSTONE XL PROJECT		
	FIA # 4359	CHAINAGE:	DISCIPLINE # 03
	TITLE: DETAIL 23 STREAMBANK RECLAMATION – LOGWALL		
CHECKED BY: WSF / DESIGN CHECKER: RW P7100	SCALE N.T.S.	DWG No 4359-03-ML-05-711	REV 02

TC_A4_BR.DWG 8.5X11

CADD DRAWING: DO NOT MAKE MANUAL REVISIONS

THESE ARE TYPICAL DRAWINGS; ACTUAL SITE CONDITIONS MAY VARY FROM THE SITE GRAPHICALLY REPRESENTED.

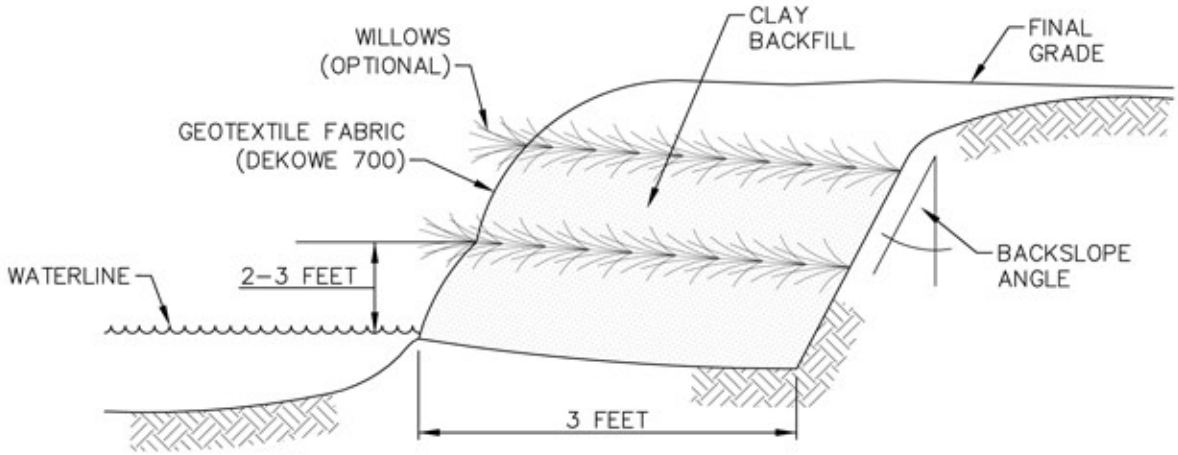

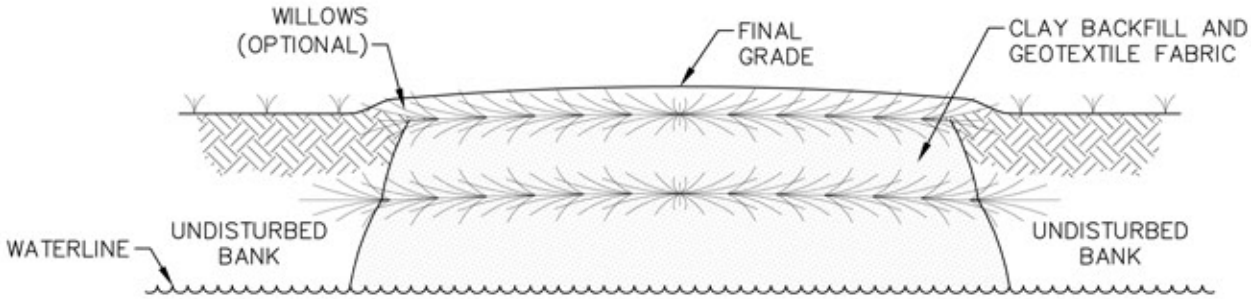

NOTES:

1. NATURE BACKFILL OR LOOSE GRADE MATERIAL SHOULD BE USED TO MINIMIZE AIR SPACES. THIS ALLOWS PROPER SOIL FABRIC CONTACT, WHICH MINIMIZES STEELING AND SCOURING DURING RUNOFF AND ENSURES SURVIVAL OF THE WILLOW CUTTINGS.
2. PLYWOOD FORMS (8'x2') MAY BE REQUIRED TO HELP RECONSTRUCT STEEP OR VERTICAL BANKS.
3. GRID LAYERS SHOULD NOT EXCEED 3 FEET IN HEIGHT WITH A MINIMUM OF 3 FEET SET IN BANK.
4. WILLOWS SHOULD BE HARVESTED AS CLOSE TO INSTALLATION AS POSSIBLE, PREFERABLY THE PREVIOUS DAY BUT NO MORE THAN 2 DAYS EARLY.
5. WILLOWS SHOULD BE 0.5 TO 1 INCH IN DIAMETER AND 2 TO 3 FEET LONG WITH NO MORE THAN 10 INCHES LEFT EXPOSED.
6. PLANTING RATE SHOULD BE APPROXIMATELY 1 STEM PER 6 INCHES.
7. INSTALLATION TO BE MODIFIED AS NECESSARY TO SUIT ACTUAL SITE CONDITIONS.

REVISIONS
01 2008-11-04 UPDATED DRAWING NOTES
02 2010-10-11 REVISED TITLE BLOCK

TransCanada
In business to deliver

exp Energy Services Inc.
t: +1.850.385.5441 | f: +1.850.385.5523
1300 Metropolitan Blvd
Tallahassee, FL 32308
USA
www.exp.com

DESIGNER:		KEYSTONE XL PROJECT		
JMP (NAME)	2010-10-21 (DATE)	FIA # 4359	CHAINAGE:	DISCIPLINE # 03
		TITLE: DETAIL 24 STREAMBANK RECLAMATION – VEGETATED GEOTEXTILE INSTALLATION		
CHECKED BY: WSF	DESIGN CHECKER: RW P7100	SCALE N.T.S.	DWG No 4359-03-ML-05-712	REV 02

TC_A4_BR.DWG 8.5X11

CADD DRAWING: DO NOT MAKE MANUAL REVISIONS

THESE ARE TYPICAL DRAWINGS; ACTUAL SITE CONDITIONS MAY VARY FROM THE SITE GRAPHICALLY REPRESENTED.

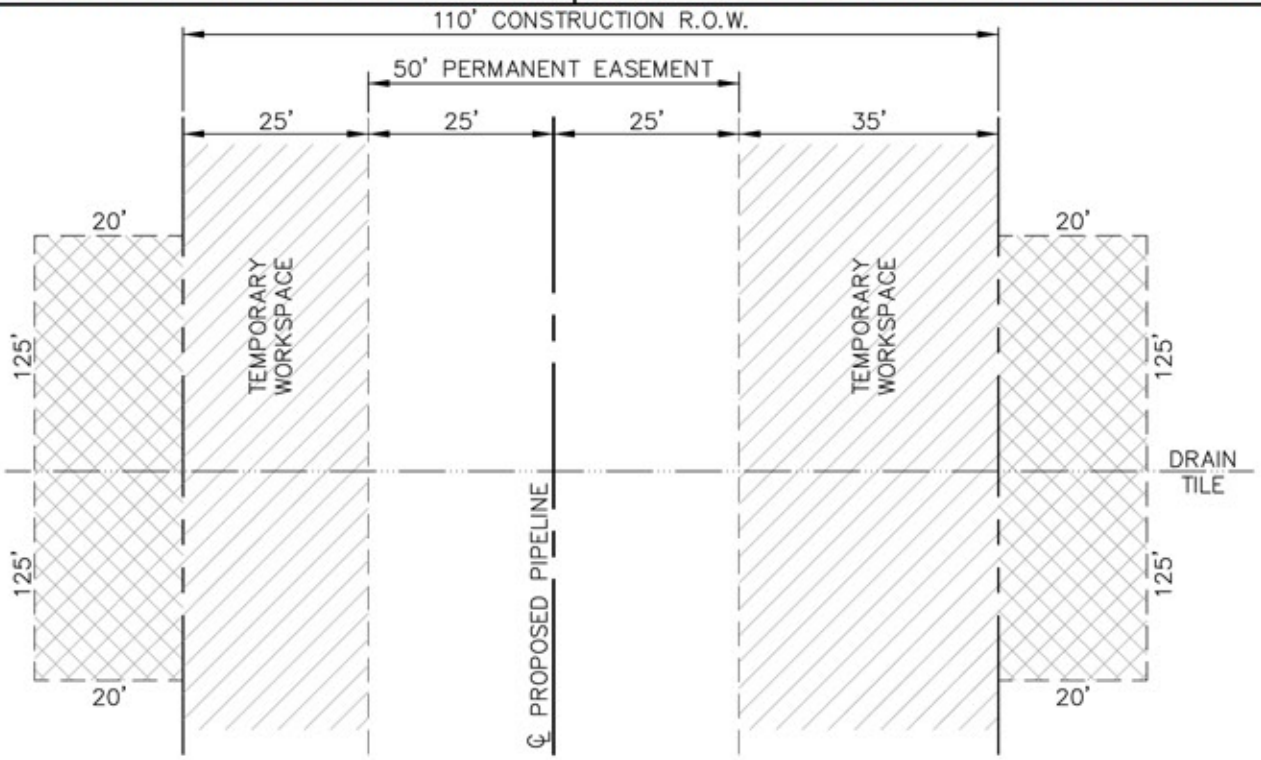

PLAN VIEW

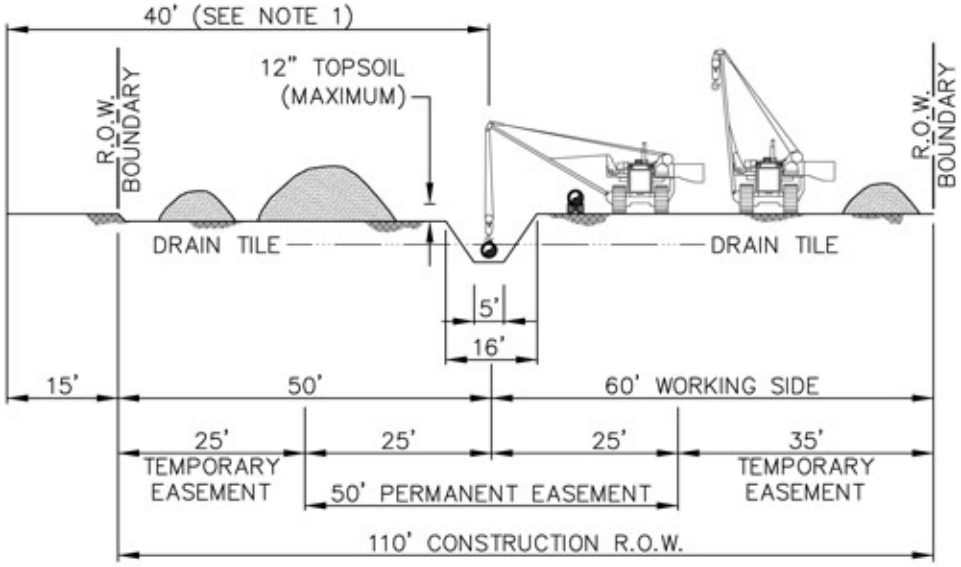

ELEVATION

NOTES:

1. THE OFFSET FROM A FOREIGN PIPELINE, WHERE APPLICABLE, WILL BE 40' FOR MOST LOCATIONS, BUT MAY BE INCREASED OR DECREASED DEPENDING ON THE SITE SPECIFIC CONSTRUCTION REQUIREMENTS.
2. THE MINIMUM CLEARANCE BETWEEN THE TOP OF PIPE AND THE BOTTOM OF DRAIN TILE WILL BE 12 INCHES.
3. INSTALLATION SPECIFICATIONS TO BE MODIFIED AS NECESSARY TO SUIT ACTUAL SITE CONDITIONS.

REVISIONS
01 REVISED NOTE 3; DELETED DIMENSION
02 2010-10-11 REVISED TITLE BLOCK

TransCanada
In business to deliver

exp Energy Services Inc.
t: +1.850.385.5441 | f: +1.850.385.5523
1300 Metropolitan Blvd
Tallahassee, FL 32308
USA
www.exp.com

DESIGNER: JMP (NAME) 2010-10-21 (DATE)	KEYSTONE XL PROJECT		
	FIA # 4359	CHAINAGE:	DISCIPLINE # 03
	TITLE: DETAIL 25 TYPICAL R.O.W. LAYOUT/SOIL HANDLING 110' CONSTRUCTION R.O.W. 50' EASEMENT DRAIN TILE CROSSING		
CHECKED BY: WSF / DESIGN CHECKER: RW P7100	SCALE N.T.S.	DWG No 4359-03-ML-03-718	REV 02

TC_A4_BR.DWG 8.5X11

CADD DRAWING: DO NOT MAKE MANUAL REVISIONS

THESE ARE TYPICAL DRAWINGS; ACTUAL SITE CONDITIONS MAY VARY FROM THE SITE GRAPHICALLY REPRESENTED.

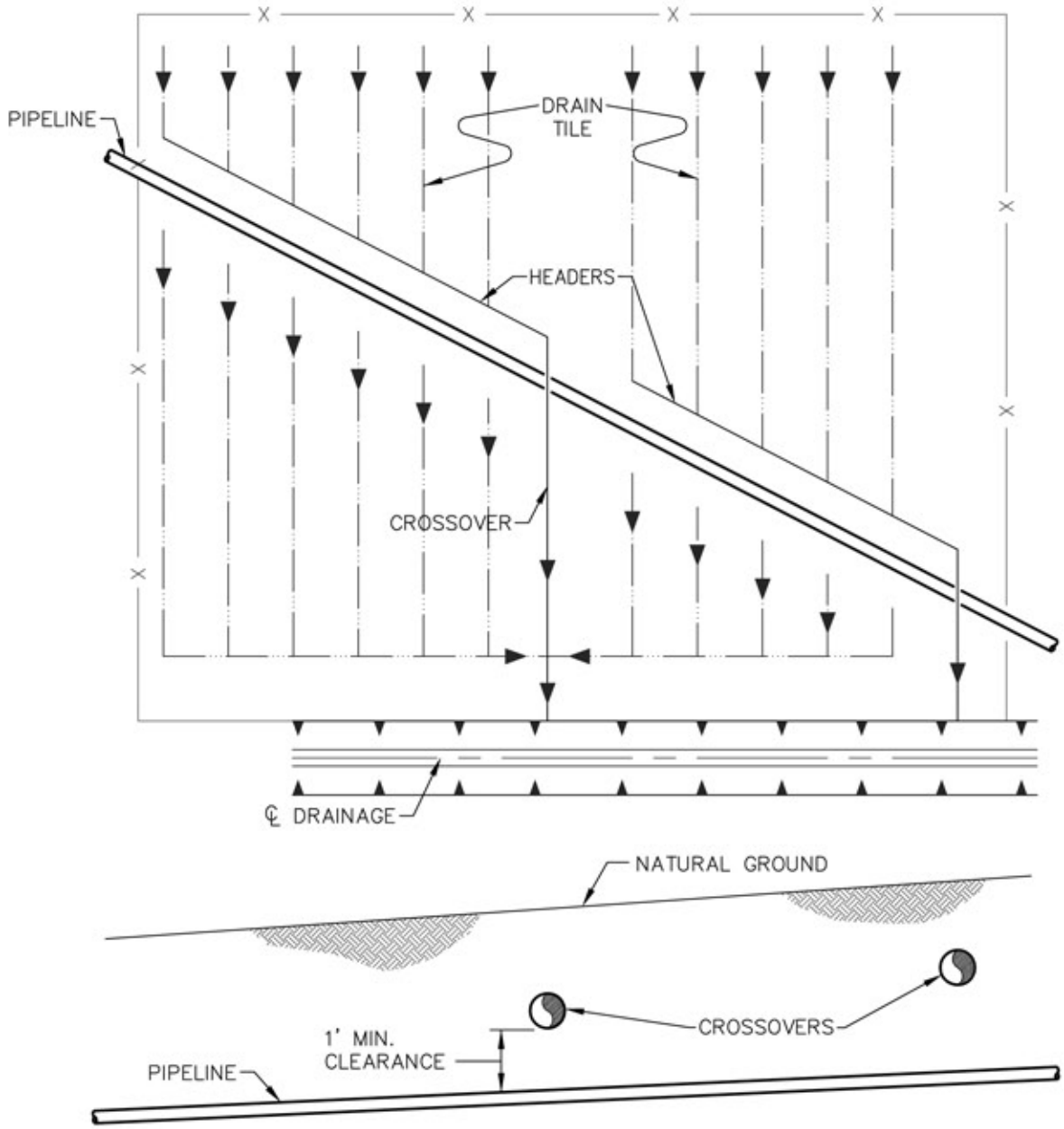

PROFILE

REVISIONS		
02	2010-10-11	REVISED TITLE BLOCK
01		ADDED DIMENSION

TransCanada
In business to deliver

exp Energy Services Inc.
t: +1.850.385.5441 | f: +1.850.385.5523
1300 Metropolitan Blvd
Tallahassee, FL 32308
USA
www.exp.com

DESIGNER: JMP (NAME) 2010-10-21 (DATE)

CHECKED BY: WSF

DESIGN CHECKER: RW P7100

KEYSTONE XL PROJECT

FIA # 4359 | CHAINAGE: | DISCIPLINE # 03

TITLE: DETAIL 26
HEADER/MAIN CROSSOVERS OF PIPELINE

SCALE N.T.S. | DWG No 4359-03-ML-03-719 | REV 02

TC_A4_BR.DWG 8.5X11

CADD DRAWING: DO NOT MAKE MANUAL REVISIONS

THESE ARE TYPICAL DRAWINGS; ACTUAL SITE CONDITIONS MAY VARY FROM THE SITE GRAPHICALLY REPRESENTED.

RELOCATE/REPLACE DRAINAGE HEADER/MAIN

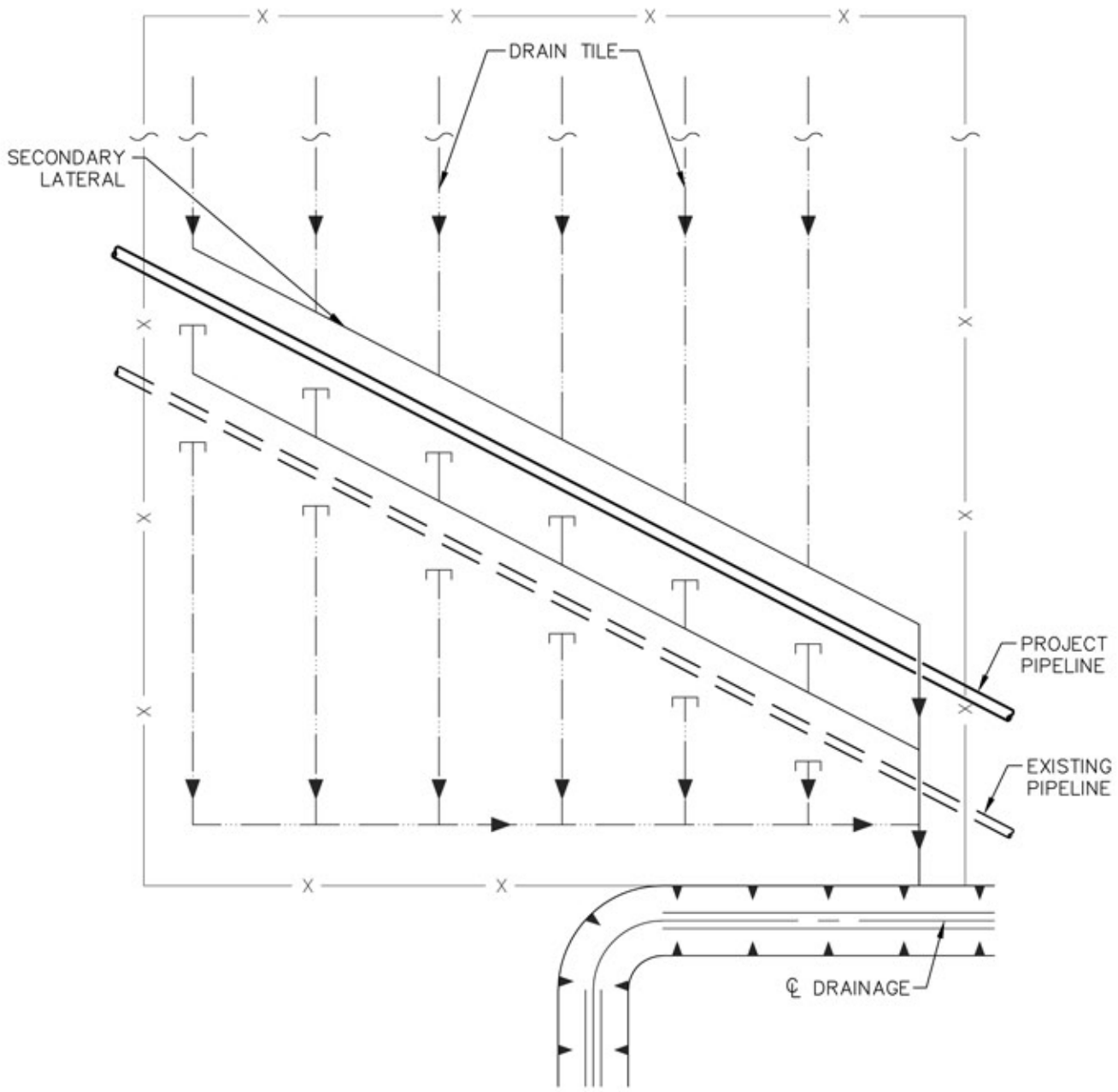

REVISIONS
01 REVISED LABELS
02 2010-10-11 REVISED TITLE BLOCK

TransCanada
In business to deliver

exp Energy Services Inc.
t: +1.850.385.5441 | f: +1.850.385.5523
1300 Metropolitan Blvd
Tallahassee, FL 32308
USA
www.exp.com

DESIGNER: JMP (NAME) 2010-10-21 (DATE)	KEYSTONE XL PROJECT		
	FIA # 4359	CHAINAGE:	DISCIPLINE # 03
	TITLE: DETAIL 27 HEADER/MAIN CROSSOVERS OF PIPELINE		
CHECKED BY: WSF	DESIGN CHECKER: RW P7100	SCALE N.T.S.	DWG No 4359-03-ML-03-720 REV 02

TC_A4_BR.DWG 8.5X11

CADD DRAWING: DO NOT MAKE MANUAL REVISIONS

THESE ARE TYPICAL DRAWINGS; ACTUAL SITE CONDITIONS MAY VARY FROM THE SITE GRAPHICALLY REPRESENTED.

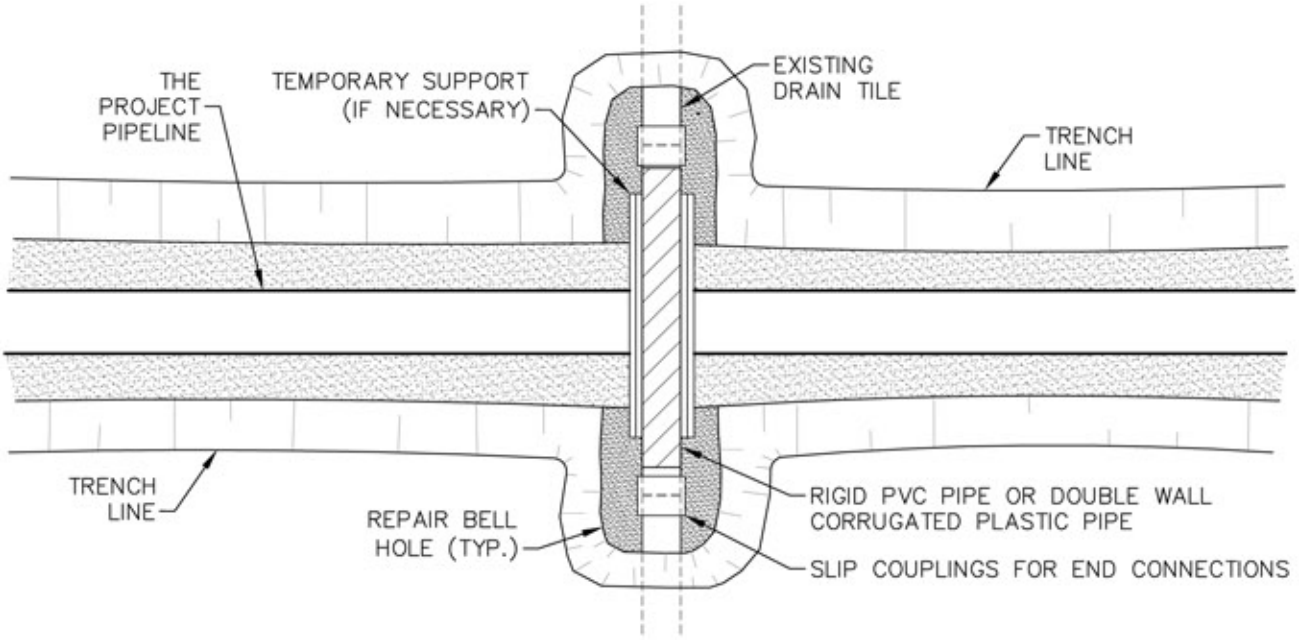

PLAN

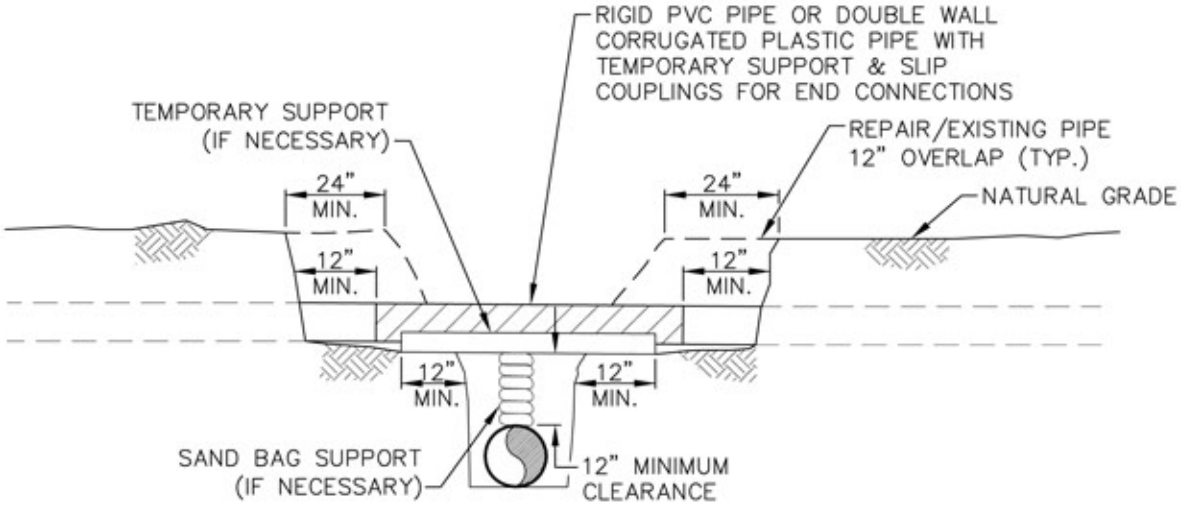

PROFILE

NOTES:

1. IMMEDIATELY REPAIR TILE IF WATER IS FLOWING THROUGH TILE AT TIME OF TRENCHING.
2. SCREEN ALL EXPOSED ENDS OF TILE LINES.

REVISIONS
01 2008-11-04 UPDATED DRAWING NOTES
02 2010-10-11 REVISED TITLE BLOCK

TransCanada
In business to deliver

exp Energy Services Inc.
t: +1.850.385.5441 | f: +1.850.385.5523
1300 Metropolitan Blvd
Tallahassee, FL 32308
USA
www.exp.com

DESIGNER: JMP (NAME) 2010-10-21 (DATE)

CHECKED BY: WSF
DESIGN CHECKER: RW P7100

KEYSTONE XL PROJECT

FIA # 4359 | CHAINAGE: | DISCIPLINE # 03

TITLE
DETAIL 28
DRAINAGE AND IRRIGATION
TEMPORARY DRAIN TILE REPAIR

SCALE N.T.S. | DWG No 4359-03-ML-03-721 | REV 02

TC_A4_BR.DWG 8.5X11

CADD DRAWING: DO NOT MAKE MANUAL REVISIONS

THESE ARE TYPICAL DRAWINGS; ACTUAL SITE CONDITIONS MAY VARY FROM THE SITE GRAPHICALLY REPRESENTED.

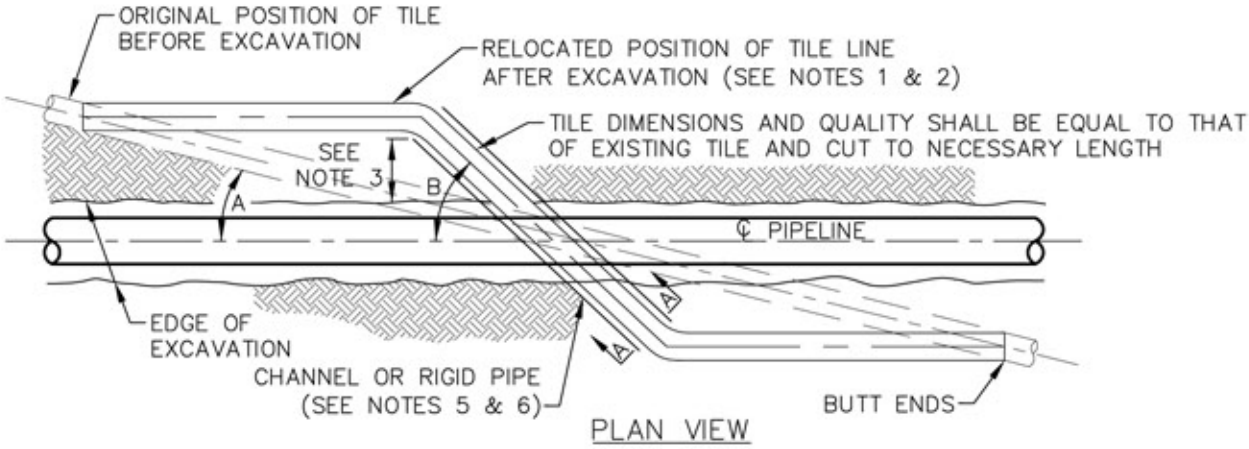

PLAN VIEW

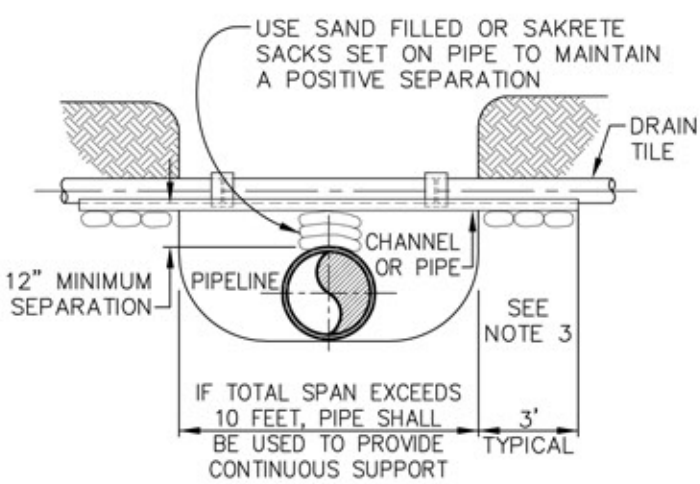

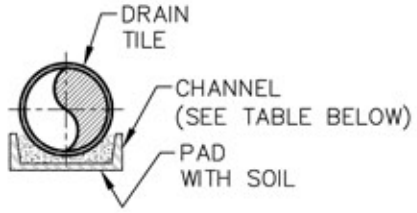

SECTION "A–A" CHANNEL (SPANS < 10 FEET)

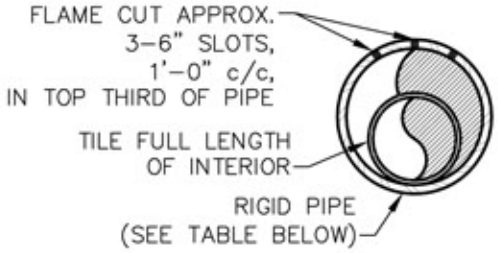

END VIEWS

SECTION "A–A" RIGID PIPE (SPANS > 10 FEET)

NOTES:

1. TILE REPAIR SHALL MAINTAIN ORIGINAL ALIGNMENT AND GRADIENT WHEN ANGLE "A", BETWEEN PIPELINE AND ORIGINAL TILE, IS MORE THAN 20 FEET UNLESS OTHERWISE DIRECTED BY THE PROJECT REPRESENTATIVE.
2. WHEN ANGLE "A" IS LESS THAN 20 FEET, UNLESS OTHERWISE DIRECTED BY COMPANY, ANGLE "B" SHALL BE 45° FOR USUAL WIDTHS OF TRENCH. FOR EXTRA WIDTHS, IT MAY BE GREATER AS DIRECTED BY THE PROJECT REPRESENTATIVE.
3. 3 FOOT MINIMUM LENGTH OF CHANNEL OR RIGID PIPE SHALL BE SUPPORTED BY UNDISTURBED SOIL, OR IF CROSSING IS NOT AT RIGHT ANGLES TO GAS PIPELINE, EQUIVALENT LENGTH PERPENDICULAR TO TRENCH. SHIM WITH SAKRETE, SAND BAGS OR CONCRETE BLOCKS TO UNDISTURBED SOIL FOR SUPPORT AND DRAINAGE GRADIENT MAINTENANCE (TYPICAL BOTH SIDES).
4. DRAINAGE TILE SHALL BE REPLACED SO THAT ITS FORMER GRADIENT AND ALIGNMENT ARE RESTORED.
5. DIAMETER OF RIGID PIPE SHALL BE OF ADEQUATE SIZE TO ALLOW FOR THE INSTALLATION OF THE TILE FOR THE FULL LENGTH OF THE RIGID PIPE.
6. OTHER METHODS OF SUPPORTING DRAIN TILE MAY BE USED IF THE ALTERNATE PROPOSED IS EQUIVALENT IN STRENGTH TO THE CHANNEL/PIPE SECTIONS SHOWN AND IF APPROVED BY THE PROJECT REPRESENTATIVE IN ADVANCE. SITE SPECIFIC ALTERNATE SUPPORT SYSTEM TO BE DEVELOPED BY THE PROJECT REPRESENTATIVE AND FURNISHED TO CONTRACTOR FOR SPANS IN EXCESS OF 20 FEET, TILE GREATER THAN 10 INCHES DIAMETER, AND FOR HEADER SYSTEMS.
7. ALL MATERIAL TO BE FURNISHED BY CONTRACTOR.
8. PRIOR TO REPAIRING TILE, CONTRACTOR SHALL PROBE INTO THE EXISTING TILE TO THE FULL WIDTH OF THE RIGHT–OF–WAY TO DETERMINE IF ADDITIONAL DAMAGE HAS OCCURRED. ALL DAMAGED/DISTURBED TILE SHALL BE REPAIRED AS NEAR AS PRACTICABLE TO ITS ORIGINAL OR BETTER CONDITION.
9. "NIGHT CAP" OPEN ENDS OF PIPE AND/OR DRAIN TILES IF REPAIRS ARE NOT COMPLETED BY END OF WORK DAY.

MINIMUM SUPPORT TABLE

TILE SIZE	CHANNEL SIZE	PIPE SIZE
3"	4" @ 5.4 #/FT.	4" STD. WT
4"–5"	5" @ 6.7 #/FT.	6" STD. WT
6"–9"	7" @ 9.8 #/FT.	8"–10" STD. WT
10"	10" @ 15.3 #/FT.	12" STD. WT

REVISIONS
01 2008–11–04 UPDATED DRAWING NOTES
02 2010–10–11 REVISED TITLE BLOCK

TransCanada
In business to deliver

exp Energy Services Inc.
t: +1.850.385.5441 | f: +1.850.385.5523
1300 Metropolitan Blvd
Tallahassee, FL 32308
USA
www.exp.com

DESIGNER: JMP (NAME) 2010–10–21 (DATE)

CHECKED BY: WSF

DESIGN CHECKER: RW P7100

KEYSTONE XL PROJECT

FIA # 4359 | CHAINAGE: | DISCIPLINE # 03

TITLE: DETAIL 29 DRAINAGE AND IRRIGATION PERMANENT DRAIN TILE REPAIR

SCALE: N.T.S. | DWG No 4359–03–ML–03–722 | REV 02

TC_A4_BR.DWG 8.5X11

CADD DRAWING: DO NOT MAKE MANUAL REVISIONS

THESE ARE TYPICAL DRAWINGS; ACTUAL SITE CONDITIONS MAY VARY FROM THE SITE GRAPHICALLY REPRESENTED.

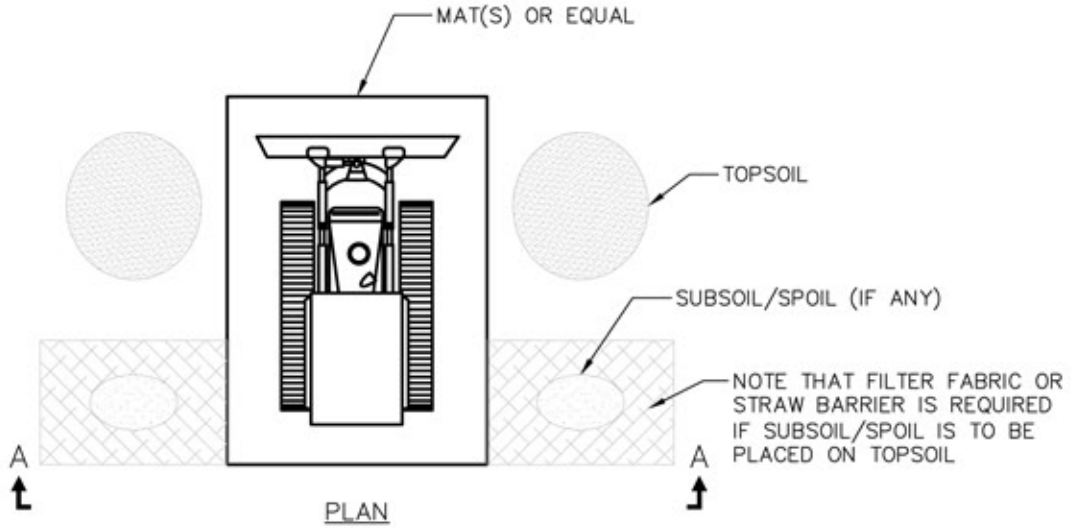

PLAN

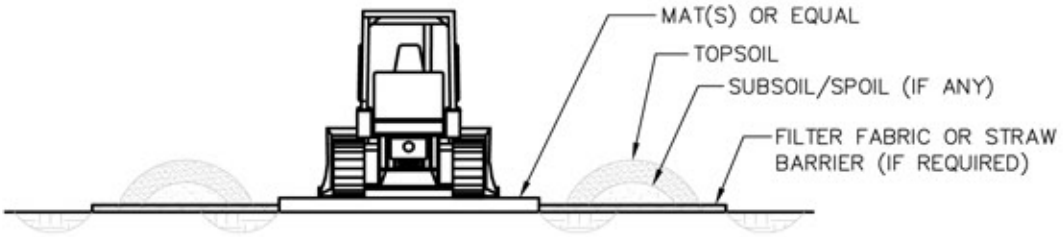

SECTION A–A

CLEANING STATION NOTES:

1. ALL EQUIPMENT WILL BE REQUIRED TO BE CLEANED AT EQUIPMENT CLEANING STATIONS LOCATED AS SHOWN ON THE CONSTRUCTION DRAWINGS OR AS DIRECTED BY THE ENVIRONMENTAL INSPECTOR.
2. STOCKPILE TOPSOIL/SUBSOIL AS SHOWN OR IN ANY CONFIGURATION APPROVED BY THE ENVIRONMENTAL INSPECTOR.
3. SHOVELS OR OTHER HAND TOOLS AND/OR COMPRESSED AIR WILL BE USED TO REMOVE AS MUCH AS MUCH SOIL AS PRACTICAL FROM TRACKED EQUIPMENT. EFFORT WILL BE FOCUSED ON TRACKS AND BLADES.
4. IF CONDITIONS ARE MUDDY, WHEELED EQUIPMENT WILL ALSO BE CLEANED USING HAND TOOLS TO REMOVE EXCESS SOIL FROM TIRES AND WHEEL WELLS.
5. CLEANING WILL BE CONDUCTED ON CONSTRUCTION MATS OR OTHER RAISED SURFACE TO MINIMIZE REATTACHMENT OF SOIL THAT HAS BEEN PREVIOUSLY REMOVED.
6. MATS WILL BE CLEANED BETWEEN EACH PIECE OF EQUIPMENT.
7. SOIL COLLECTED DURING THE CLEANING PROCESS WILL BE STOCKPILED AT A CONVENIENT LOCATION NEAR THE CLEANING STATION AND DISPOSED OF IN AN ACCEPTABLE LAND FILL.
8. IF THE SOIL HAS A SIGNIFICANT COMPONENT OF SUBSOIL, IT WILL BE PLACED OVER THE BACKFILLED TRENCH OR IN THE ADJACENT SPOIL STORAGE AREA, AND SUBSEQUENTLY COVERED WITH TOPSOIL. IF THE LAND OWNER DIES NOT APPROVE OF ON–SITE DISPOSAL, THE SOIL WILL BE TAKEN TO AN APPROVED DISPOSAL SITE.
9. SOILS CONTAMINATED WITH OIL OR GREASE WILL BE REMOVED AND DISPOSED OF IN ACCORDANCE PROJECT SPCCC PLAN.

REVISIONS
01 REVISED LABELS
02 2010–10–11 REVISED TITLE BLOCK

TransCanada
In business to deliver
exp Energy Services Inc.
t: +1.850.385.5441 | f: +1.850.385.5523
1300 Metropolitan Blvd
Tallahassee, FL 32308
USA
www.exp.com

DESIGNER: JMP (NAME) 2010–10–21 (DATE)	KEYSTONE XL PROJECT		
	FIA # 4359	CHAINAGE:	DISCIPLINE # 03
	TITLE: DETAIL 30 EQUIPMENT CLEANING STATION DETAIL		
CHECKED BY: WSF	DESIGN CHECKER: RW P7100	SCALE N.T.S.	DWG No 4359–03–ML–05–713 REV 02

TC_A4_BR.DWG 8.5X11

CADD DRAWING: DO NOT MAKE MANUAL REVISIONS

THESE ARE TYPICAL DRAWINGS; ACTUAL SITE CONDITIONS MAY VARY FROM THE SITE GRAPHICALLY REPRESENTED.

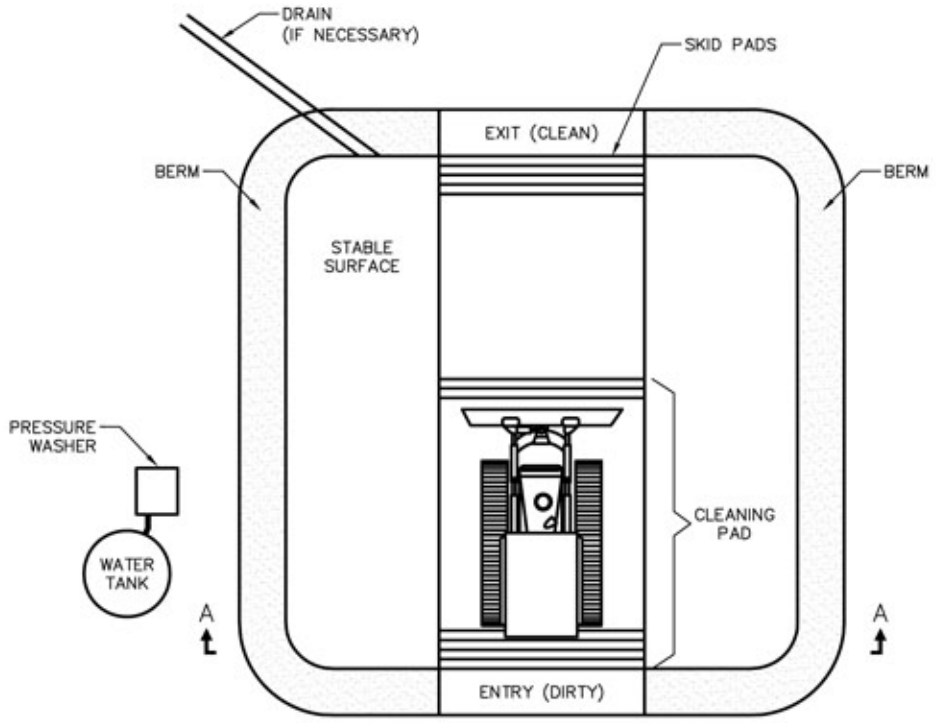

PLAN

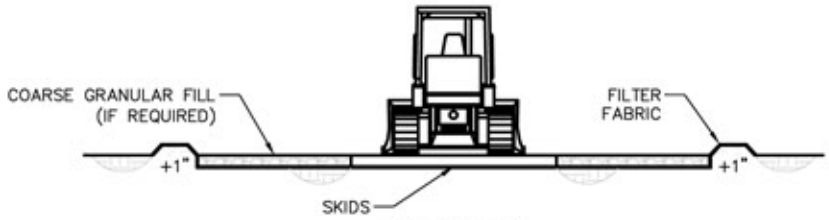

SECTION A–A

WASH STATION NOTES:

1. ALL EQUIPMENT AND VEHICLES ARE REQUIRED TO BE CLEANED AT WASH STATION LOCATIONS SHOWN ON THE CONSTRUCTION DRAWINGS OR AS DIRECTED BY THE ENVIRONMENTAL INSPECTOR. WASH STATIONS WILL BE CONSTRUCTED BY THE CONTRACTOR. WASHINGS WILL BE CARRIED OUT UNDER THE SUPERVISION AND TO SATISFACTION OF THE ENVIRONMENTAL INSPECTOR.
2. WASH WATER USED FOR CLEANING WILL NOT BE ALLOWED TO ENTER ANY WATERBODY, WETLAND, OR IRRIGATION CANAL/DITCH. ANY SOILS CONTAMINATED BY PETROLEUM–BASED, OR OTHER UNDESIRABLE MATERIALS FROM WASH STATIONS WILL BE REMOVED.
3. THE SIZE OF STATION WILL BE ADEQUATE TO ACCOMMODATE THE MAXIMUM SIZE OF EQUIPMENT EXPECTED.
4. EQUIPMENT WILL CONSISTENTLY ENTER THE "DIRTY END" AND EXIT THE "CLEAN END."
5. STABLE DRAINAGE FROM THE SITE WILL BE PROVIDED (IF NECESSARY). NO DISCHARGE TO STREAMS OR WETLANDS WILL BE ALLOWED.
6. WASH STATIONS WILL BE EQUIPPED WITH SKID PADS OR WASH RACKS TO PREVENT SOIL FROM BEING CARRIED ON TRACKS OR TIRES AS EQUIPMENT AND VEHICLES EXIT THE WASH STATION. SKIDS ARE TO BE CLEANED EACH TIME A PIECE OF EQUIPMENT IS CLEANED.
7. GRAVEL FILL (IF REQUIRED) AND FILTER FABRIC WILL BE REMOVED AND DISPOSED OF IN AN ACCEPTABLE LAND FILL.
8. THE DEPRESSION WILL BE BACKFILLED WITH BERMED MATERIAL.
9. CLEANING SITES WILL BE MONITORED DURING THE POST CONSTRUCTION MONITORING PROGRAM AND WEEDS WILL BE CONTROLLED PER THE NOXIOUS WEED MANAGEMENT PLAN.

REVISIONS | 01 REVISED LABELS | 02 2010–10–11 REVISED TITLE BLOCK

TransCanada
In business to deliver

exp Energy Services Inc.
t: +1.850.385.5441 | f: +1.850.385.5523
1300 Metropolitan Blvd
Tallahassee, FL 32308
USA
www.exp.com

DESIGNER: JMP (NAME) 2010–10–21 (DATE)	KEYSTONE XL PROJECT		
	FIA # 4359	CHAINAGE:	DISCIPLINE # 03
	TITLE: DETAIL 31 EQUIPMENT WASH STATION DETAIL		
CHECKED BY: WSF	DESIGN CHECKER: RW P7100	SCALE N.T.S.	DWG No 4359–03–ML–05–714 REV 02

TC_A4_BR.DWG 8.5X11

CADD DRAWING: DO NOT MAKE MANUAL REVISIONS

THESE ARE TYPICAL DRAWINGS; ACTUAL SITE CONDITIONS MAY VARY FROM THE SITE GRAPHICALLY REPRESENTED.

1. POTENTIAL LOCATIONS WHERE TRIPLE DITCH TOPSOIL CONSERVATION MAY BE COMPLETED ARE SHOWN ON THE ALIGNMENT SHEETS. KEYSTONE WILL DIRECT THE ACTUAL LOCATIONS WHERE TRIPLE DITCH WILL BE COMPLETED DURING, OR IMMEDIATELY PRIOR TO, TOPSOILING THE ROW. KEYSTONE MAY MODIFY TRIPLE DITCH PROCEDURES FROM THOSE DESCRIBED HERE TO ADDRESS SITE-SPECIFIC, OR SOIL-SPECIFIC, CONDITIONS.

2. STRIP TOPSOIL ("A" HORIZON) ACCORDING TO THE "A" HORIZON DEPTHS AND CONSTRUCTION DETAILS SHOWN ON CONSTRUCTION ALIGNMENT SHEETS. PLACE "A" HORIZON IN THE ADDITIONAL TEMPORARY WORKSPACE OR THE WINDROW WITHIN THE WORKING SIDE OF THE CONSTRUCTION RIGHT-OF-WAY. IN AREAS OF THICKER "A" HORIZON'S, "A" HORIZON MAY BE SPLIT TO BOTH SIDES OF THE RIGHT-OF-WAY.
REMOVE "B" HORIZON (2ND DITCH) TO DEPTHS SPECIFIED BY KEYSTONE AND STOCKPILE ON SPOIL SIDE. THE "B" HORIZON SHOULD BE REMOVED IN A STRIP AT LEAST 20 FEET WIDE OVER THE TRENCH TO ALLOW FOR STORAGE OF THE TRENCH SPOIL MATERIALS. MAINTAIN A MINIMUM OF 2 FEET BETWEEN "A" HORIZON AND "B" HORIZON STOCKPILES.

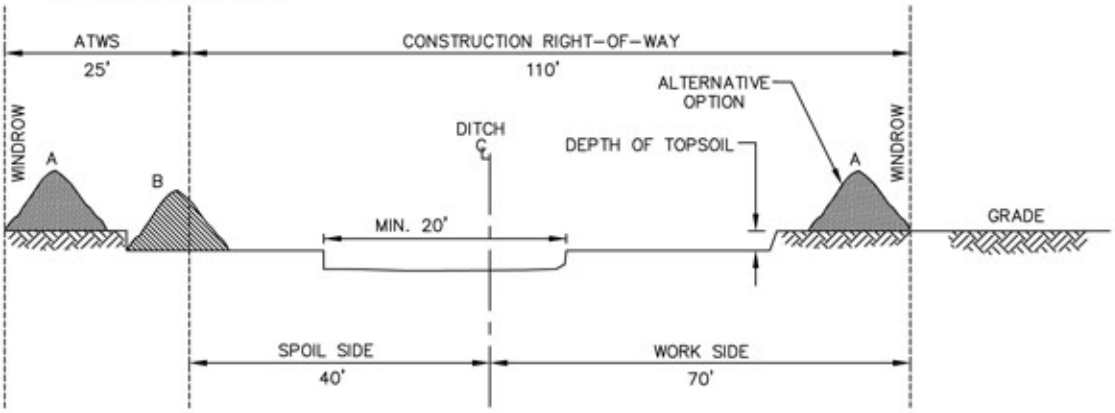

3. EXCAVATE TRENCH. ENSURE THE DIFFERENT SOIL HORIZONS ("B" HORIZON AND "C" HORIZON) ARE IN SEPARATE STOCKPILES. THE VISUAL DISTINCTION OF EACH PILE MUST BE POSSIBLE AT ALL TIMES. THE STOCKPILING SHALL ALLOW FOR RE-PLACEMENT OF THE SOIL HORIZONS BACK TO THEIR ORIGINAL SEQUENCE WITHOUT LOSS OF SOIL. MAINTAIN A MINIMUM OF 2 FEET BETWEEN "B" HORIZON AND "C" HORIZON STOCKPILES.

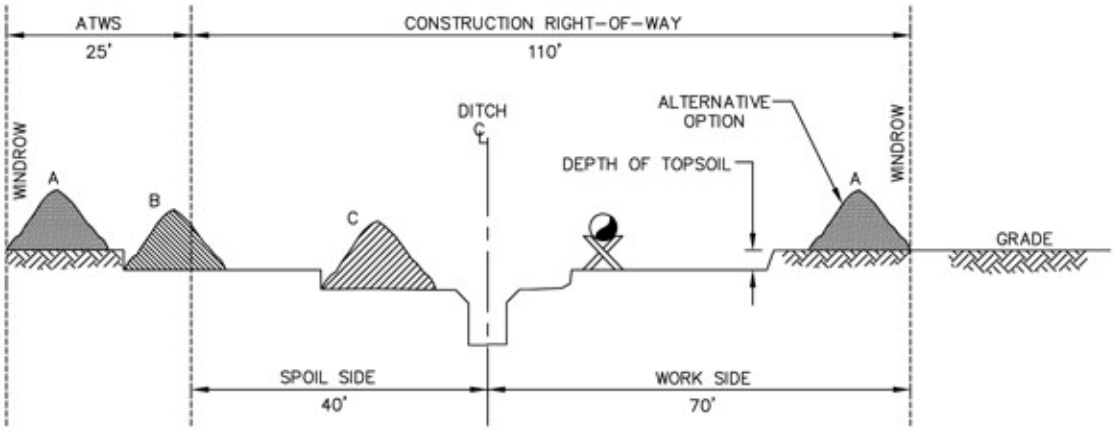

REVISIONS | 01 REVISED LABELS | 02 2010-10-08 REVISED DETAIL | 03 2010-10-11 REVISED TITLE BLOCK

TransCanada
In business to deliver

exp Energy Services Inc.
t: +1.850.385.5441 | f: +1.850.385.5523
1300 Metropolitan Blvd
Tallahassee, FL 32308
USA
www.exp.com

DESIGNER:		KEYSTONE XL PROJECT		
JMP (NAME)	2010-10-21 (DATE)	FIA # 4359	CHAINAGE:	DISCIPLINE # 03
		TITLE: DETAIL 67 TOPSOIL CONSERVATION DITCH & SPOIL STRIPPING TRIPLE DITCH		
CHECKED BY: WSF	DESIGN CHECKER: RW P7100	SCALE N.T.S.	DWG No 4359-03-ML-05-724	REV 03

TC_A4_BR.DWG 8.5X11

CADD DRAWING: DO NOT MAKE MANUAL REVISIONS

THESE ARE TYPICAL DRAWINGS; ACTUAL SITE CONDITIONS MAY VARY FROM THE SITE GRAPHICALLY REPRESENTED.

4. BACKFILL TRENCH AND COMPACT AS PER APPROVED PROCEDURE.. PLACE THE SOIL HORIZONS BACK IN THEIR ORIGINAL SEQUENCE IN THE TRENCH.

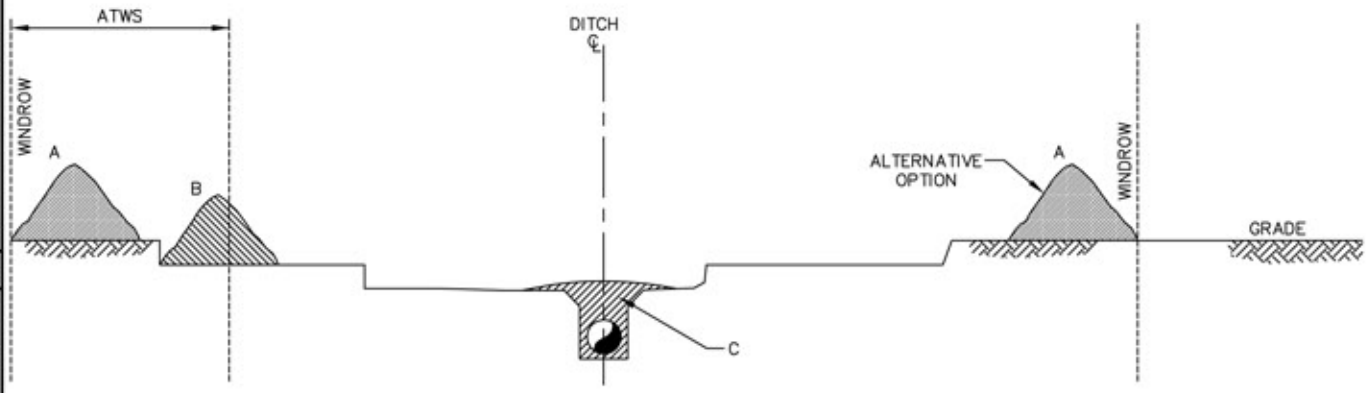

5. RELIEVE AREAS OF COMPACTION AND FEATHER (B) MATERIAL EVENLY OVER STRIPPED AREA.

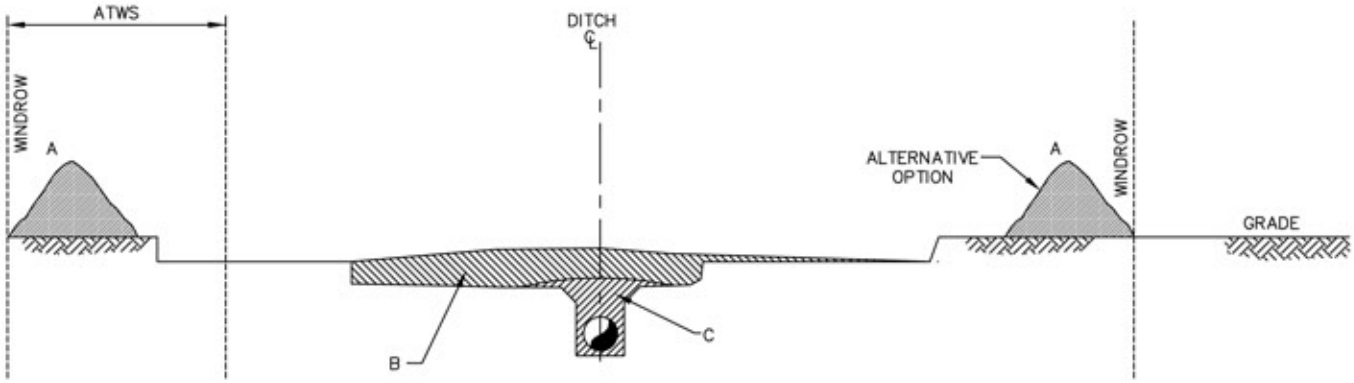

6. REPLACE "A" HORIZON PILE EVENLY OVER STRIPPED AREA.

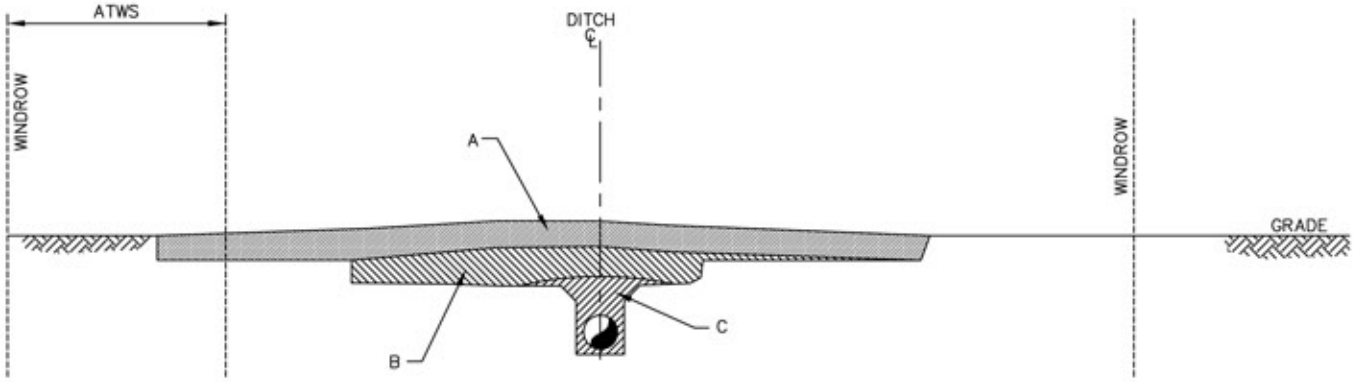

REVISIONS		
01	REVISED LABELS	
02	2010-10-08 REVISED DETAIL	
03	2010-10-11 REVISED TITLE BLOCK	

TransCanada
In business to deliver

exp Energy Services Inc.
t: +1.850.385.5441 | f: +1.850.385.5523
1300 Metropolitan Blvd
Tallahassee, FL 32308
USA
www.exp.com

DESIGNER: JMP (NAME) 2010-10-21 (DATE)

CHECKED BY: WSF

DESIGN CHECKER: RW P7100

KEYSTONE XL PROJECT

FIA # 4359 | CHAINAGE: | DISCIPLINE # 03

TITLE: DETAIL 67A
TOPSOIL CONSERVATION DITCH & SPOIL STRIPPING TRIPLE DITCH

SCALE: N.T.S. | DWG No: 4359-03-ML-05-725 | REV: 03

TC_A4_BR.DWG 8.5X11

CADD DRAWING: DO NOT MAKE MANUAL REVISIONS

-This page intentionally left blank-