Appendix T

Draft Biological Assessment

Prepared for:
Keystone XL Project

Keystone XL Project Applicant - Prepared Biological Assessment

Draft

Acronyms and Abbreviations

APLIC	Avian Power Line Interaction Committee
AWBP	Aransas-Wood Buffalo National Park
BA	Biological Assessment
BLM	Bureau of Land Management
BMP	Best Management Practice
CFR	Code of Federal Regulations
CMRP	Construction, Mitigation, and Reclamation Plan
CWS	Canadian Wildlife Service
DOS	Department of State
ERP	Emergency Response Plan
ESA	Endangered Species Act
FR	Federal Register
HDD	horizontal directional drill
Keystone	TransCanada Keystone Pipeline LP
km	kilometer
kV	kilovolt
MFWP	Montana Fish, Wildlife, and Parks
MALAA	May affect, likely to adversely affect
mi	miles
MLV	Main Line Valve
MOP	maximum operating pressure
MVa	million volt-amp
NA	Not Applicable
NGPC	Nebraska Game and Parks Commission
NLAA	May affect, not likely to adversely affect
NRC	National Response Center

NRCS	Natural Resources Conservation Service
OCC	Operations Control Center
ODWC	Oklahoma Department of Wildlife Conservation
ONHI	Oklahoma Natural Heritage Inventory
OPS	Office of Pipeline Safety
PHMSA	Pipeline Hazardous Material Safety Administration
PMP	Pipeline Maintenance Program
Project	Keystone XL Project
ROW	right-of-way
SCADA	Supervisory Control and Data Acquisition
SDGFP	South Dakota Game, Fish, and Parks
SPCC	Spill Prevention, Control, and Countermeasure
TBD	To Be Determined
TPWD	Texas Parks and Wildlife Department
TWAs	Temporary Work Areas
TXNDD	Texas Natural Diversity Database
US	United States
USDOT	United States Department of Transportation
USEPA	United States Environmental Protection Agency
USFWS	United States Fish and Wildlife Service
USGS	United States Geological Survey

Contents

1.0 Introduction 1-1

1.1 Section 7 Process 1-1

1.2 Consultation History 1-1

1.3 Analysis Summary 1-5

1.4 Summary of Species Considered but Eliminated from Detailed Analysis 1-6

1.4.1 Louisiana Black Bear 1-6
1.4.2 Red Wolf 1-6
1.4.3 Brown Pelican 1-7
1.4.4 Eskimo Curlew 1-7
1.4.5 Red-cockaded Woodpecker 1-7
1.4.6 Topeka Shiner 1-7
1.4.7 Houston Toad 1-7
1.4.8 Green Sea Turtle 1-7
1.4.9 Hawksbill Sea Turtle 1-7
1.4.10 Kemp's Ridley Sea Turtle 1-8
1.4.11 Leatherback Sea Turtle 1-8
1.4.12 Loggerhead Sea Turtle 1-8
1.4.13 Ouachita Rock Pocketbook 1-8
1.4.14 Texas Trailing Phlox 1-8
1.4.15 Literature Cited 1-8

2.0 Proposed Action 2-1

2.1 Proposed Action 2-1

2.1.1 Project Description and Location 2-1
2.1.2 Pipeline Construction Overview 2-2
2.1.3 Ancillary Facilities Summary 2-2
2.1.4 Land Requirements 2-2
2.1.5 Pipeline ROW 2-2
2.1.6 Additional Temporary Workspace Areas 2-15
2.1.7 Pipe Stockpile Sites, Railroad Sidings, and Contractor Yards 2-15
2.1.8 Construction Camps 2-16
2.1.9 Access Roads 2-16
2.1.10 Aboveground Facilities 2-17
2.1.11 Construction Procedures 2-21
2.1.12 Operation and Maintenance 2-36

2.2 References 2-39

3.0 Species Evaluation 3-1

3.1 Federally Endangered 3-1

3.1.1 Black-footed Ferret: Endangered/Proposed – Experimental Populations 3-1
3.1.2 Interior Least Tern 3-5

3.1.3 Whooping Crane 3-12
3.1.4 Pallid Sturgeon 3-17
3.1.5 American Burying Beetle 3-20
3.1.6 Texas Prairie Dawn-Flower 3-25
3.2 Federally Threatened 3-28
3.2.1 Piping Plover 3-28
3.2.2 Arkansas River Shiner 3-35
3.2.3 Western Prairie Fringed Orchid 3-38

List of Appendices

Appendix A Construction Mitigation and Reclamation Plan

Appendix B Pipeline Risk Assessment and Environmental Consequence Analysis

Appendix C A Summary Report of the July 2008 Piping Plover (*Charadrius melodus*) and Least Tern (*Sterna antilarum*) Surveys for the Steele City Segment of the Keystone XL Project

Appendix D Habitat Assessment for the Federally Endangered American Burying Beetle (*Nicrophorus americanus*) along the Steele City Segment of the Keystone XL Project Right-Of-Way in Nebraska and South Dakota

Appendix E A Field Survey for the Texas Prairie Dawn-Flower (*Hymenoxys texana*) Along the Houston Lateral in Harris County, Texas

Appendix F Hydrostatic Test Plan (*To be Provided at a Later Date*)

Appendix G A Field survey for the Interior Least Tern (*Sterna antillarum athalassos*) Along the Gulf Coast Segment of the Keystone XL Pipeline Project

Appendix H American Burying Beetle (*Nicrophorus americanus*) Survey and habitat Assessment for The Keystone XL Project in Lamar County, Texas and habitat Assessment for Oklahoma

Appendix I A Field Survey for Western Prairie Fringed Orchid (*Platenthera praeclara*) and the Small White Lady's-Slipper (*Cypripedium candidum*) Along the Keystone XL Project in South Dakota and Nebraska

Appendix J Supporting Meeting Summaries, Consultation Letters and Communications

List of Tables

Table 1.3-1 Summary of Species Included in Analysis and Findings 1-5

Table 2.1-1 Project Facilities by State 2-1

Table 2.1-2 Summary of Lands Affected 2-13

Table 2.1-3 Locations and Acreage of Potential Pipe Stockpile Sites, Railroad Sidings, and Contractors Yards 2-15

Table 2.1-4 Minimum Pipeline Cover 2-23

Table 2.1-5 Waterbodies Crossed Using the Horizontal Directional Drilling Method 2-28

Table 2.1-6 Summary of Power Supply Requirements for Pump Stations and Tank Farm 2-32

Table 2.1-8 Resulting Cross-Country Construction Times Based on Estimates of Schedule 2-36

Table 3.1-1 Occurrence Surveys for the Interior Least Tern Along the Steele City Segment of the Keystone XL Project in 2008 3-6

Table 3.1-2 Habitat and Occurrence Surveys for the Interior Least Tern Along the Gulf Coast Segment in 2009 3-8

Table 3.1-3 American Burying Beetle Occurrence along the Steele City Segment of the Keystone XL Project 3-21

Table 3.2-1 Results of the Piping Plover Nesting Surveys for the Steele City Segment of the Keystone XL Project 3-30

List of Figures

Figure 2.1-1 Project Overview 2-3

Figure 2.1-2 Project Overview (Montana) 2-4

Figure 2.1-3 Project Overview (South Dakota) 2-5

Figure 2.1-4 Project Overview (Nebraska) 2-6

Figure 2.1-5 Project Overview (Kansas) 2-7

Figure 2.1-6 Project Overview (Oklahoma) 2-8

Figure 2.1-7 Project Overview (Texas) 2-9

Figure 2.1-8 Typical 110-foot Construction ROW (36-inch Pipeline) with Topsoil Removal Only over Trench Line 2-10

Figure 2.1-9 Typical 110-foot Construction ROW (36-inch Pipeline) Spoil Side Adjacent and Co-located to Existing Pipeline 2-11

Figure 2.1-10 Typical 110-foot Construction ROW (36-inch Pipeline Centerline Offset) Working Side Adjacent and Co-located to Existing Pipeline 2-12

Figure 2.1-11 Typical Pump Station without Pigging Facilities 2-19

Figure 2.1-12 Typical Pump Station with Pigging Facilities 2-20

Figure 2.1-13 Typical Pipeline Construction Sequence 2-22

1.0 Introduction

1.1 Section 7 Process

The United States (US) Department of State (DOS) is the lead federal agency for the evaluation of anticipated impacts of the proposed TransCanada Keystone Pipeline, LP (Keystone) Keystone XL Project (Project). Federal agencies, in consultation with the US Fish and Wildlife Service (USFWS) and National Marine Fisheries Service (NMFS), are required to ensure that any action they authorize, fund, or carry out would not adversely affect a federally listed species or species proposed for federal listing. A Biological Assessment (BA) is required under Section 7(c) of the Endangered Species Act (ESA), if listed species or their critical habitat may be present in the area affected by any aspect of the Project. An in-depth review was performed for the Project components (i.e., Project centerline right-of-way [ROW] and above ground facilities). An analysis of associated facilities, such as transmission lines, was less detailed.

1.2 Consultation History

Construction and operation of the Project may affect habitats and populations of species protected under the federal ESA and by individual state legislation. The DOS appointed Keystone and its subcontractors to act as its designated non-federal representatives for Section 7 Consultation. In April 2008, Keystone, on behalf of the DOS, initiated consultation with the USFWS, Bureau of Land Management (BLM), and state natural heritage programs and wildlife agencies to identify species and habitats of concern. No NMFS listed species were determined to be within the proposed Project area. After meeting with USFWS, BLM, and state agencies, lists of species and habitats potentially affected by the Project were compiled for further analysis. Keystone developed field survey protocols, target survey areas, and survey schedules using this information. Keystone developed these survey protocols, schedules, and target areas and began submitting them to appropriate agencies for review and comment in the spring of 2008. Agency review and approval of survey protocols began in 2008 and is ongoing. Keystone filed documentation of agency correspondence associated with the review and approval process with the DOS in November 2008 and July 2009.

Biological field surveys within the Project footprint (e.g., pipeline ROW), pump stations, access roads, pipe yards, contractor yards, extra workspace, etc.) were initiated in spring 2008. These surveys were conducted along the centerline and an Environmental Report was filed with the DOS in November 2008. Additional surveys along the ROW have continued through spring 2009, to accommodate route alignment modifications, access permissions by private landowners, and additional agency requests for surveys. If necessary, additional species-specific field surveys would be conducted prior to construction, in coordination with the appropriate agencies.

The following provides a summary of Keystone's agency correspondence, species specific survey information, and continued consultation with the USFWS regarding coordination of biological surveys and determination of biological impacts for the Project:

- April 2008, Multiple Agencies: Keystone sent initial consultation letters to the Steele City Segment (Montana, South Dakota, and Nebraska) USFWS, BLM, state wildlife agencies, and state natural heritage programs to request their input on identifying prominent terrestrial and aquatic resource issues or concerns that may occur within or adjacent to the ROW, focusing on species that are either sensitive (e.g., federally listed), have high economic value (e.g., big game, waterfowl), or are considered important resources (e.g., raptors, fish). The consultation letters included state-specific special status species tables compiled from data received from each state, USFWS, and BLM with brief descriptions of species habitat, miles of potential habitat crossed by the Project, and approximate mileposts where potential habitat was identified along the ROW.
- April 10, 2008, USFWS – Arlington, Texas, Ecological Services Field Office: Project representatives met with the USFWS Texas Field Office in Arlington, Texas. The goals of the meeting were to

introduce the Project, discuss the list of species that may occur in the Project area, define the survey approach and discuss survey protocols for the Project, and discuss any agency concerns, issues, or questions.

- April 16, 2008, USFWS – Tulsa, Oklahoma, Ecological Services Field Office: Project representatives met with the USFWS Oklahoma Field Office in Tulsa, Oklahoma. The goals of the meeting were to introduce the Project, discuss the list of species that may occur in the Project area, define the survey approach and discuss survey protocols for the Project, and discuss any agency concerns, issues, or questions.
- April 29, 2008, USFWS – Clear Lake, Texas, Ecological Services Field Office: Project representatives met with the USFWS Texas Field Office in Houston, Texas. The goals of the meeting were to introduce the Project, discuss the list of species that may occur in the Project area, define the survey approach and discuss survey protocols for the Project, and discuss any agency concerns, issues, or questions.
- May 5, 2008, USFWS / Nebraska Game and Parks Commission (NGPC): Keystone held an agency meeting at the NGPC office in Lincoln, Nebraska, to discuss issues pertaining to wildlife, special status species, and sensitive habitat that could potentially occur in the Project area. Attendees included representatives from USFWS and NGPC. The goal was to gather input on agency recommendations based on the information sent to them in April 2008 for species occurrence, habitat assessments, and future field surveys. Keystone incorporated comments from the meeting into survey protocol and best management practices (BMPs) documents for future agency verification.
- May 8, 2008, USFWS / Montana Fish, Wildlife, and Parks (MFWP): Keystone held an agency meeting at the MFWP office in Helena, Montana, to discuss issues pertaining to wildlife, special status species, and sensitive habitat that could potentially occur in the Project area. Attendees included representatives from USFWS and MFWP. The goal was to gather input on agency recommendations based on the information sent to them in April 2008 for species occurrence, habitat assessments, and future field surveys. Keystone incorporated comments from the meeting into survey protocol and BMPs documents for future agency verification. MFWP requested a follow-up meeting with additional technical staff from MFWP (Regions 6 and 7).
- May 23, 2008, Texas Parks and Wildlife Department (TPWD): Project representatives met with the TPWD in Dickinson, Texas, at the Justin Hurst Wildlife Management Area. The goals of the meeting were to introduce the Project, discuss the list of species that may occur in the Project area, define the survey approach and discuss survey protocols for the Project, and discuss any agency concerns, issues, or questions.
- June 3, 2008, USFWS – Lufkin, Texas, Ecological Services East Texas Sub-office: Project representatives met with the USFWS Texas Field Sub-office in Lufkin, Texas. The primary purpose of this meeting was to meet with a USFWS biologist, who was not able to attend the previous meeting in Arlington, Texas, and specialized in reviews for potential habitat and distribution of the red-cockaded woodpecker and Louisiana pine snake, as well as public and private land issues.
- June 10, 2008. USFWS / South Dakota Department of Game, Fish, and Parks (SDGFP): Keystone held an agency meeting with staff from USFWS and SDGFP at the SDGFP office in Pierre, South Dakota, to discuss issues pertaining to wildlife, special status species, and sensitive habitat that could potentially occur in the Project area. The goal was to gather input on agency recommendations based on the information sent to them in April 2008 for species occurrence, habitat assessments, and future field surveys. Keystone incorporated comments from the meeting into survey protocol and BMPs documents for future agency verification.
- July 1, 2008, Oklahoma Department of Wildlife Conservation (ODWC): Project representatives met with the ODWC in Oklahoma City, Oklahoma. The goals of the meeting were to introduce the Project, discuss the list of species that may occur in the Project area, define the survey approach and discuss survey protocols for the Project, and discuss any agency concerns, issues, or questions.

- July 29, 2008, MFWP/BLM: Keystone held an agency meeting with staff from the BLM Glasgow Field Office and MFWP Region 6 and 7 at the MFWP office in Glasgow, Montana, to discuss issues pertaining to wildlife, special status species, and sensitive habitat that could potentially occur in the Project area. The goal was to gather input on agency recommendations based on the information sent to them in April 2008 for species occurrence, habitat assessments, and future field surveys. Keystone incorporated comments from the meeting into survey protocol and BMPs documents for future agency verification.
- September 4, 2008, USFWS – Arlington, Clear Lake, and Lufkin, Texas, and Tulsa, Oklahoma, Field Offices: Keystone sent consultation letters to the USFWS describing the proposed threatened and endangered species biological survey program and the list of species for which species-specific surveys would occur. The consultation letters included a compact disc containing electronic files of the ROW. The consultation letters requested input on the species lists.
- September 12, 2008, USFWS – Arlington, Texas, Ecological Services Field Office: Keystone received a consultation letter from the USFWS regarding recommendations for the proposed list of threatened and endangered species-specific surveys, identified habitats that are a high priority of conservation, and provided recommendations for content of mitigation plan for fish and wildlife resources.
- November 12, 2008, USFWS – Clear Lake, Texas, Ecological Services Field Office: Keystone received a consultation letter from the USFWS regarding recommendations for the proposed list of threatened and endangered species-specific surveys, habitat descriptions and field evaluations, lighting at aboveground facilities, pipeline monitoring criteria, utility corridors, and identified other areas of concern.
- December 3, 2008, USFWS – Tulsa, Oklahoma, Ecological Services Field Office: Keystone received a consultation letter from the USFWS regarding recommendations for the proposed list of threatened and endangered species-specific surveys, habitats of special concern, and provided BMPs for projects affecting rivers, streams, and tributaries. USFWS requests formal consultation with DOS to address take of the American Burying Beetle.
- January / February 2009, Multiple Agencies: Keystone sent the Steele City Segment (Montana, South Dakota, and Nebraska) USFWS, BLM, and state wildlife agencies a consultation package that included state-specific special status species survey protocol and BMPs documents for the species identified as potentially occurring during the 2008 meetings. A summary of the findings from the 2008 biological field surveys were included in the discussions.
- January 6, 2009, USFWS – Clear Lake, Texas, Ecological Services Field Office: Project representatives met with the USFWS Texas Field Office in Houston, Texas. The goals of the meeting were to discuss updated project details and schedule, provide a status on the current environmental data gathering, discuss current list of species of concern, and discuss any unresolved concerns, issues, or questions.
- January 14, 2009, USFWS – Arlington, Texas, Ecological Services Field Office: Project representatives met with the USFWS Texas Field Office in Arlington, Texas. The goals of the meeting were to discuss updated project details and schedule, provide a status on the current environmental data gathering, discuss current list of species of concern, and discuss any unresolved concerns, issues, or questions.
- January 20, 2009, USFWS – Tulsa, Oklahoma Ecological Services Field Office: Project representatives met with the USFWS Oklahoma Field Office in Tulsa, Oklahoma. The goals of the meeting were to discuss updated project details and schedule, provide a status on the current environmental data gathering, discuss current list of species of concern, and discuss any unresolved concerns, issues, or questions.
- January 27, 2009. USFWS/SDGFP: Keystone held an agency meeting with staff from USFWS and SDGFP at the SDGFP office in Pierre, South Dakota, to discuss issues pertaining to special status species surveys. The goal of this meeting was to verify Keystone's survey approach, BMPs, discuss

required field surveys, and review the information that was sent to the USFWS in the January/ February consultation package. The USFWS and SDGFP provided additional recommendations to Keystone's sensitive species mitigation approach to be updated prior to final agency concurrence.

- February 3, 2009, BLM/MFWP: Keystone held an agency meeting with staff from the BLM Glasgow Field Office and MFWP Regions 6 and 7 at the MFWP office in Glasgow, Montana, to discuss issues pertaining to special status species surveys. The goal of this meeting was to verify Keystone's survey approach, BMPs, discuss required field surveys, and review the information that was sent to the USFWS in the January/February consultation package. The BLM and MFWP provided additional recommendations to Keystone's sensitive species mitigation approach to be updated prior to final agency concurrence.
- February 5, 2009, BLM: Keystone held a conference call in lieu of an agency meeting with staff from the BLM Glasgow, Malta, and Miles City field offices to discuss issues pertaining to special status species surveys. The goal of this meeting was to verify Keystone's survey approach, BMPs, discuss required field surveys, and review the information that was sent to the USFWS in the January/ February consultation package. The BLM provided additional recommendations to Keystone's sensitive species mitigation approach to be updated prior to final agency concurrence.
- February 19, 2009, USFWS/NGPC: Keystone held an agency meeting with staff from USFWS and NGPC at the NGPC office in Lincoln, Nebraska, to discuss issues pertaining to special status species surveys. The goal of this meeting was to verify Keystone's survey approach, BMPs, discuss required field surveys, and review the information that was sent to the USFWS in the January/February consultation package. The USFWS and NGPC provided additional recommendations to Keystone's sensitive species mitigation approach to be updated prior to final agency concurrence.
- April 3, 2009, USFWS – Clear Lake, Texas, Ecological Services Field Office: Keystone sent e-mail correspondence to the USFWS Clear Lake, Texas Field Office regarding survey protocols for the Texas prairie dawn-flower. Comments and concurrence were received on the survey locations and methodology on April 7, 2009, and surveys were initiated following receipt of approval.
- May 19, 2009, USFWS – Tulsa, Oklahoma, Ecological Services Field Office: Keystone sent e-mail correspondence to the USFWS Tulsa, Oklahoma Field Office regarding survey protocols for the interior least tern. Comments and concurrence were received on the survey locations and methodology on June 17, 2009, and surveys were initiated following receipt of approval.
- June 16, 2009, USFWS – Tulsa, Oklahoma, Ecological Services Field Office: Keystone held a conference call with staff from the Tulsa, Oklahoma, Ecological Services Field Office to discuss issues pertaining to the American burying beetle. The goal of this meeting was to determine the next steps in the consultation process for the American burying beetle and verify that the USFWS was receiving the information they required. The USFWS provided guidance for the information that should be included in the BA.
- June 25, 2009, USFWS – Pierre, South Dakota Ecological Services Field Office: Keystone called C. Besskin, USFWS Pierre, South Dakota Field Office regarding geotech activity clearance. The USFWS requests formal consultation with DOS to address take of the American burying beetle in South Dakota.
- June 30, 2009, USFWS – Arlington, Clear Lake, and Lufkin, Texas, and Tulsa, Oklahoma; Oklahoma Department of Wildlife Conservation (ODWC), and Texas Parks and Wildlife Department (TPWD): Keystone sent consultation letters to the USFWS, ODWC, and TPWD in order to confirm the final list of species-specific surveys that were required for the Project, to summarize for the agencies the results of surveys that had been completed to date, and to confirm that any species not included in the summary are not likely to be adversely affected by the Project.
- September 25, 2009, Texas Parks and Wildlife Department (TPWD): Keystone received a consultation letter from TPWD in response to the letter dated June 30, 2009 that provided recommendations to protect fish and wildlife resources and information on known occurrence of fish

and wildlife resources near the Project area. TPWD also attached the April 13, 2009 letter that had been submitted to Elizabeth Orlando at the US DOS.

- November 2, 2009, NOAA Fisheries Service, Protected Resources Division, Southeast Regional Office: DOS received concurrence on sea turtle species occurrence and no effect to sea turtles as the Project would not cross estuarine or marine habitats.

Based on the consultation with state agencies, BLM, and the USFWS throughout 2008 and 2009, Keystone was able to refine the proposed biological surveys and survey requirements for each species that may potentially be affected by the Project.

1.3 Analysis Summary

This analysis addresses 23 federally listed species that were identified by the USFWS and state wildlife agencies as potentially occurring in the Project area. No species proposed for listing were identified during consultations. **Table 1.3-1** summarizes these species and the preliminary impact determinations based on: 1) correspondence with the USFWS, BLM, and state wildlife agencies; 2) habitat requirements and the known distribution of these species within the Project area; and 3) habitat analyses and field surveys that were conducted for these species in 2008 and 2009. Potential impacts associated with electrical infrastructure required for the Project are based on the 2008 and 2009 biological surveys where available. The Rural Utilities Service, an agency within the US Department of Agriculture; and Western Area Power Administration, an agency of the US Department of Energy would consult with USFWS where potential impacts to federally protected species may occur under Section 7 of the ESA when final routing and construction procedures for electrical power lines have been determined.

Table 1.3-1 Summary of Species Included in Analysis and Findings

Common Name	Scientific Name	Federal Status	Detailed Analysis Included	Preliminary Findings Summary[1]
Mammals				
Black-footed ferret	*Mustela nigripes*	Endangered/Proposed – Experimental Populations	Yes	NLAA/NLAA
Louisiana black bear/ American black bear	*Ursus americanus luteolus/ Ursus americanus*	Threatened/ Threatened – Similarity of Appearance	No/No	No Effect/ No Effect
Red wolf	*Canis rufus*	Endangered	No	No Effect
Birds				
Brown pelican	*Pelecanus occidentalis*	Endangered	No	No Effect
Eskimo curlew	*Numenius borealis*	Endangered	No	No Effect
Interior least tern	*Sterna antillarum*	Endangered	Yes	NLAA
Piping plover	*Charadrius melodus*	Threatened	Yes	NLAA
Red-cockaded woodpecker	*Picoides borealis*	Endangered	No	No Effect
Whooping crane	*Grus americana*	Endangered	Yes	NLAA
Fish				
Arkansas River shiner/ Designated Critical Habitat	*Notropis girardi*	Threatened	Yes	NLAA/ NLAA
Pallid sturgeon	*Scaphirhynchus albus*	Endangered	Yes	NLAA
Topeka shiner	*Notropis topeka*	Endangered	No	No Effect

Table 1.3-1 Summary of Species Included in Analysis and Findings

Common Name	Scientific Name	Federal Status	Detailed Analysis Included	Preliminary Findings Summary[1]
Amphibians				
Houston toad	*Bufo houstonensis*	Endangered	No	No Effect
Reptiles				
Green sea turtle	*Chelonia mydas*	Threatened	No	No Effect
Hawksbill sea turtle	*Eretmochelys imbricata*	Endangered	No	No Effect
Kemp's ridley sea turtle	*Lepidochelys kempii*	Endangered	No	No Effect
Leatherback sea turtle	*Dermochelys coriacea*	Endangered	No	No Effect
Loggerhead sea turtle	*Caretta caretta*	Threatened	No	No Effect
Invertebrates				
American burying beetle	*Nicrophorus americanus*	Endangered	Yes	MALAA
Ouachita rock pocketbook	*Arkansia wheeleri*	Endangered	No	No Effect
Plants				
Texas prairie dawn-flower	*Hymenoxys texana*	Endangered	Yes	NLAA
Texas trailing phlox	*Phlox nivalis texensis*	Endangered	No	No Effect
Western prairie fringed orchid	*Platanthera praeclara*	Threatened	Yes	NLAA

[1] NLAA – May affect, not likely to adversely affect.
MALAA – May affect, likely to adversely affect.

1.4 Summary of Species Considered but Eliminated from Detailed Analysis

Fourteen federally listed species initially identified as potentially occurring within the Project area were evaluated during consultation, but were eliminated from detailed analysis based on further review of the location of the Project relative to the species' known distribution, habitat associations, or additional information provided by federal or state agencies.

1.4.1 Louisiana Black Bear

The Louisiana black bear is occasionally found in the Project area in eastern Texas. Habitat used by the Louisiana black bear typically includes large tracts of undisturbed bottomland hardwood forests, vegetation corridors for dispersal, and denning habitat in hollows or root wads of large trees. Currently, there is not a breeding population of the Louisiana black bear in Texas, although there are occasional movements, primarily of solitary juvenile males, from Louisiana into eastern Texas (Campbell 2003). This species was eliminated from detailed analysis due to the mobility of individuals that may migrate through the Project area, infrequent use of the Project area, no known den sites in the Project area, and additional information provided by the Texas USFWS Clear Lake Field Office (AECOM 2009b).

1.4.2 Red Wolf

The red wolf was once found throughout the southeastern United States; however; the USFWS declared red wolves to be extinct in the wild in 1980. Subsequently, two experimental populations were established in North

Carolina and Tennessee. Currently, the population in North Carolina is the only one known to exist in the wild (USFWS 2007). Therefore, the red wolf was eliminated from detailed analysis.

1.4.3 Brown Pelican

The brown pelican nests on small, coastal islands along the Gulf Coast of Texas and part of the Texas population also spends the non-breeding season along the Texas coast (Campbell 2003). Although this species is listed in counties crossed by the Project, the brown pelican nests, winters, and migrates along the coast, outside of the Project area. Therefore, the brown pelican was eliminated from detailed analysis.

1.4.4 Eskimo Curlew

The Eskimo curlew historically migrated through the Project area in Nebraska. "The last report for Nebraska was on 8 April 1926. A flock of eight birds was seen six kilometers (km) (four miles) east of Hastings (Swenk 1926:117)" (Gollop et al. 1986). Correspondence from the Nebraska USFWS and NGPC has determined that this species would not be impacted by the Project (AECOM 2009a). Therefore, the Eskimo curlew was eliminated from detailed analysis.

1.4.5 Red-cockaded Woodpecker

The red-cockaded woodpecker is found in mature pine forests of east Texas. Red-cockaded woodpeckers nest and roost in clusters of trees containing and surrounding excavated cavity trees ideally with a grassy or herbaceous understory with little mid-story (Campbell 2003). In 2002, there were 342 known active red-cockaded woodpecker clusters in east Texas, distributed within 15 counties of the Pineywoods Region of eastern Texas (Campbell 2003). The USFWS reviewed maps of the Project route in east Texas and confirmed that there were no known red-cockaded woodpecker clusters or potential suitable habitat within the proposed Project alignment. Additionally, during the 2008 and 2009 aerial surveys, the Project route was reviewed for suitable habitat and no areas of suitable red-cockaded woodpecker nesting habitat were identified. Therefore, the red-cockaded woodpecker was eliminated from detailed analysis.

1.4.6 Topeka Shiner

The Topeka shiner is listed as occurring in Butler County, Kansas (USFWS 2008a). One 10-acre pump station site is proposed for Butler County, Kansas, on the Cushing Extension of the Keystone Pipeline Project. The proposed pump-station site required for the Keystone XL Project is located within an agricultural field and suitable habitat does not exist for the Topeka shiner in or near this location. Therefore, the Topeka shiner was eliminated from detailed analysis. Consultation and mitigation of potential impacts to the Topeka shiner for the Cushing Extension Pipeline were completed by DOS for the Keystone Project (USFWS 2008b).

1.4.7 Houston Toad

The Houston toad is associated with areas of deep sandy soils within pine or oak woodland or savannah with native bunchgrasses and forbs of east central Texas (Campbell 2003). It is often found in shallow, ephemeral pools, flooded fields, or wet areas associated with springs or seeps during breeding season (Campbell 2003). This species was eliminated from detailed analysis as the known distribution is outside of the Project area.

1.4.8 Green Sea Turtle

The green sea turtle may be found in the Gulf of Mexico off of the Texas coast and uses beaches along the mainland or on islands for nesting (NMFS and USFWS 1991). This species was eliminated from detailed analysis because marine and estuarine habitats are not crossed by the Project.

1.4.9 Hawksbill Sea Turtle

The hawksbill sea turtle may be found in the Gulf of Mexico off of the Texas coast and is known to nest on both mainland and insular beaches. In Texas, juvenile hawksbills are associated with stone jetties (NMFS and

USFWS 1993). This species was eliminated from detailed analysis because marine and estuarine habitats are not crossed by the Project.

1.4.10 Kemp's Ridley Sea Turtle

The Kemp's ridley sea turtle occurs off the Texas coast in coastal areas of the Gulf of Mexico. Nesting is primarily limited to beaches of the western Gulf of Mexico in Mexico; but may also occur on the Texas coast. Juveniles are known to frequent bays, coastal lagoon, and river mouths (USFWS and NMFS 1992). This species was eliminated from detailed analysis because marine and estuarine habitats are not crossed by the Project.

1.4.11 Leatherback Sea Turtle

The leatherback sea turtle occurs off the Texas coast in the Gulf of Mexico and are believed to be the most pelagic of all sea turtles. Nesting generally occurs on high-energy beaches with deep, unobstructed access, which occurs most frequently along continental shorelines (NMFS and USFWS 1992). This species was eliminated from detailed analysis because marine and estuarine habitats are not crossed by the Project.

1.4.12 Loggerhead Sea Turtle

The loggerhead sea turtle may be found in the Gulf of Mexico off the coast of Texas where they nest primarily on barrier islands (NMFS and USFWS 2008). In the ocean, this sea turtle is found in the neritic and oceanic zones. This species was eliminated from detailed analysis because marine and estuarine habitats are not crossed by the Project.

1.4.13 Ouachita Rock Pocketbook

The Ouachita rock pocketbook has the potential to exist in the Red River system where it may be found in large mussel beds containing a diversity of species. These beds are generally found within medium-sized rivers with stable substrates of mud, sand, and gravel and backwater or slackwater area areas adjacent to the main channel (TPWD 2007). The Ouachita rock pocketbook was analyzed in the Environmental Report for the Project because the TPWD lists this species as potentially occurring in Lamar County, Texas. This mussel was reported to occur in Sanders Creek and Pine Creek, Lamar County, Texas in the early 1990s (USFWS 2004); however, the USFWS does not currently list this species as occurring in any of the counties crossed by the Project in Oklahoma or Texas (USFWS 2009). The Keystone XL Project crosses Sanders Creek upstream from Pat Mayse Lake in Lamar, County over 30 miles upstream from reported occurrences in this stream which were below this reservoir (USFWS 2004). The Project does not cross the Pine Creek drainage in Lamar County, and is located over 40 miles from the reported occurrence of the Ouachita rock pocketbook on this stream in Lamar County, Texas. Therefore, the Ouachita rock pocketbook was eliminated from detailed analysis.

1.4.14 Texas Trailing Phlox

The Texas trailing phlox occurs in sandy soils of open pine woodlands (USFWS 1994). There are two known populations of this species in southeast Texas, one in Tyler County, which is not crossed by the Project, and one in northeastern Hardin County. The Project is located about 30 miles from the Hardin County population and crosses the southwestern portion of this county. Therefore, the Texas trailing phlox was eliminated from detailed analysis.

1.4.15 Literature Cited

AECOM. 2009a. TransCanada – Keystone Xl Phase II Pipeline Meeting summary. J. Cochnar (USFWS), C. Grell (NGPC), R. Schneider (NGPC), M. Fritz (NGPC), and P. Lorenz (AECOM). February 19, 2009.

AECOM. 2009b. Personal communication between E. Efling (USFWS) and J. Castillo (AECOM). June 25, 2009.

Campbell, L. 2003. Endangered and Threatened Animals of Texas: Their Life History and Management. Internet website: http://www.tpwd.state.tx.us/huntwild/wild/species/endang/index.phtml. Accessed August 12, 2008.

Gollop, J. B., T. W. Barry, and E. H. Iversen. 1986. Eskimo curlew a vanishing species? Saskatchewan Natural History Society Special Publication No. 17. Regina, Saskatchewan. Northern Prairie Wildlife Research Center Online. Internet website: http://www.npwrc.usgs.gov/resource/birds/curlew/index.htm (Version 16JUL97). Accessed September 23, 2009.

National Marine Fisheries Service (NMFS) and US Fish and Wildlife Service (USFWS). 1991. Recovery Plan for U.S. Population of Atlantic Green Turtle. National Marine Fisheries Service, Washington, D.C. 52 pp. Internet website: http://ecos.fws.gov/docs/recovery_plan/911126c.pdf. Accessed November 2, 2009.

National Marine Fisheries Service (NMFS) and US Fish and Wildlife Service. 1992. Recovery Plan for Leatherback Turtles in the U.S. Caribbean, Atlantic and Gulf of Mexico. National Marine Fisheries Service, Washington, D.C. 65 pp. Internet website: http://ecos.fws.gov/docs/recovery_plan/920406.pdf. Accessed November 2, 2009.

National Marine Fisheries Service (NMFS) and US Fish and Wildlife Service (USFWS). 1993. Recovery Plan for Hawksbill Turtles in the U.S. Caribbean Sea, Atlantic Ocean, and Gulf of Mexico. National Marine Fisheries Serve, St. Petersburg, Florida. 52 pp. Internet website: http://ecos.fws.gov/docs/recovery_plan/931110.pdf. Accessed November 2, 2009.

National Marine Fisheries Service (NMFS) and US Fish and Wildlife Service (USFWS). 2008. Recovery Plan for the Northwest Atlantic Population of the Loggerhead Sea Turtle (*Caretta caretta*), Second Revision. National Marine Fisheries Service, Silver Spring, MD. 325 pp. Internet website: http://ecos.fws.gov/docs/recovery_plan/090116.pdf. Accessed November 2, 2009.

Swenk, M. H. 1926. The Eskimo Curlew in Nebraska. Wilson Bulletin 38: 117-118.

Texas Parks and Wildlife Department (TPWD). 2007. Annotated County Lists of Rare Species. Internet website: http://gis.tpwd.state.tx.us/TpwEndangeredSpecies/DesktopDefault.aspx. Accessed August 10, 2008.

US Fish and Wildlife Service (USFWS) and National Marine Fisheries Service (NMFS). 1992. Recovery Plan for the Kemp's Ridley Sea Turtle (*Lepidochelys kempii*). National Marine Fisheries Service, St. Petersburg, Florida. 40 pp. Internet website: http://ecos.fws.gov/docs/recovery_plan/920929.pdf. Accessed November 2, 2009.

US Fish and Wildlife Service (USFWS). 1994. Texas trailing phlox recovery plan. U.S. Fish and Wildlife Service, Albuquerque, New Mexico. 42 pp. Internet website: http://ecos.fws.gov/docs/recovery_plan/950328a.pdf. Accessed September 23, 2009.

US Fish and Wildlife Service (USFWS). 2004. Ouachita Rock Pocketbook (*Arkansia wheeleri* Ortmann and Walker, 1912) Recovery Plan. Prepared by U.S. Fish and Wildlife Service, Oklahoma Ecological Services Field Office, Tulsa, Oklahoma. Internet website: http://ecos.fws.gov/docs/recovery_plan/040602.pdf. Accessed September 23, 2009.

US Fish and Wildlife Service (USFWS). 2007. Red Wolf (*Canis rufus*). 5-Year Status Review: Summary and Evaluation. U.S. Fish and Wildlife Service, Manteo, North Carolina. 58 pp. Internet website: http://ecos.fws.gov/docs/five_year_review/doc1155.pdf. Accessed November 2, 2009.

US Fish and Wildlife Service (USFWS). 2008a. Endangered, Threatened, Proposed, and Candidate Species, Kansas Counties, December 2008. US Fish and Wildlife Service, Ecological Services, Kansas Field Office. Internet website: http://www.fws.gov/mountain-prairie/endspp/countylists/kansas.pdf. Accessed September 22, 2009.

US Fish and Wildlife Service (USFWS). 2008b. Letter of concurrence under Section 7 of the Endangered Species Act for the Proposed Keystone and Cushing Pipeline Project by TransCanada. March 7, 2008. Letter to Ms. Elizabeth Orlando, US Department of State from Michael Le Valley, Acting Nebraska Field Supervisor, US Fish and Wildlife Service, Grand Island, Nebraska. Internet website: http://www.entrix.com/keystone/project/concur.pdf. Accessed September 22, 2009.

US Fish and Wildlife Service (USFWS). 2009. Endangered Species Program, Southwest Region, T&E Species Lists. Last updated January 9, 2009. Internet website: http://www.fws.gov/southwest/es/EndangeredSpecies/lists/. Accessed September 23, 2009.

2.0 Proposed Action

2.1 Proposed Action

Keystone proposes to construct and operate a crude oil transmission system from an oil supply hub near Hardisty, Alberta, Canada, to destinations in the US. The Project would have the nominal capacity to deliver up to 900,000 barrels per day of crude oil.

An overview map of the Project location is provided in **Figure 2.1-1**. **Figures 2.1-2** to **2.1-7** are maps showing the more detailed pipeline route and aboveground facilities locations in each state.

2.1.1 Project Description and Location

The Project would consist of three segments: the Steele City Segment, the Gulf Coast Segment, and the Houston Lateral. From north to south, the Steele City Segment extends from Hardisty, Alberta, southeast to Steele City, Nebraska. The Gulf Coast Segment extends from Cushing, Oklahoma, south to Nederland, in Jefferson County, Texas. The Houston Lateral extends from the Gulf Coast Segment in Liberty County, Texas, southwest to Moore Junction, Harris County, Texas. In total, the Project would consist of approximately 1,707 miles of new, 36-inch diameter pipeline, with 327 miles in Canada and 1,380 miles in the US. It would interconnect with the northern and southern termini of the previously approved 298-mile-long, 36-inch diameter Keystone Cushing Extension segment of the Keystone Pipeline Project. Project facilities by State are summarized in **Table 2.1-1**.

Table 2.1-1 Project Facilities by State

Segment/State	New Construction Pipeline Miles	Ancillary Facilities
Steele City Segment		
Montana	282.5	6 new pump stations, 14 main line valves (MLVs), 50 access roads
South Dakota	314.1	6 new pump stations, 9 MLVs, 18 access roads
Nebraska	254.1	6 new pump stations, 13 MLVs, Steele City Tank Farm, 12 access roads
Keystone Cushing Extension		
Kansas	0	2 new pump stations and 0 access roads
Gulf Coast Segment		
Oklahoma	155.4	4 new pump stations, 10 MLVs, 93 access roads
Texas	324.8	6 new pump stations, 21 MLVs, 1 delivery site, 245 access roads
Houston Lateral		
Texas – Houston Lateral	48.6	7 MLVs, 1 delivery site, 31 access roads
Total	**1,379.5**	

2.1.2 Pipeline Construction Overview

In the US, the Project is planned to be constructed as follows:

- 36-inch diameter Steele City Segment, approximately 851 miles in length, from the US/Canada Border at Morgan, Montana, to Steele City, Nebraska, which would be constructed with 10 mainline spreads, varying in length between approximately 80 and 94 miles each, in 2011 and 2012.
- 36-inch diameter Gulf Coast Segment, approximately 480 miles in length, from Cushing, Oklahoma, to Nederland, Texas, which would be constructed with 6 mainline spreads, varying in lengths from 47 to 99 miles each, in 2010 and 2011.
- 36-inch diameter Houston Lateral, approximately 49 miles in length, from Liberty County, Texas, to Harris County, Texas, which would be constructed with one main spread, in 2012.

2.1.3 Ancillary Facilities Summary

In addition to the pipeline, Keystone proposes to install and operate aboveground facilities consisting of 30 new pump stations on the Steele City and Gulf Coast Segments, and two new pump stations on the Keystone Cushing Extension. Additionally, Keystone would install and operate two delivery facilities, 74 intermediate MLVs, and four densitometer facilities, all of which would be located within the permanent easement. Further, there would be check valves located within the intermediate MLVs downstream of major river crossings. Keystone also would install and operate a tank farm consisting of three tanks at Steele City, Nebraska. Metering would be installed and operated at the two delivery sites at Nederland and Moore Junction, near Houston in Harris County, Texas.

Additional facilities such as power lines required for the pump stations, remotely operated valves, and densitometers would be installed and operated by local power providers and not by Keystone. A summary of impacts associated with the installation of the power lines is contained in Section 7 of the Environmental Report.

2.1.4 Land Requirements

Surface disturbance associated with the construction and operation of the Project is summarized in **Table 2.1-2**. Approximately 23,768 acres of land would be disturbed during the construction of the proposed facilities. After construction, the temporary ROW would generally be restored and returned to its previous land use. After construction is complete, approximately 8,737 acres would be retained as permanent ROW. All disturbed acreage would be restored and returned to its previous aboveground land use after construction, except for approximately 368 acres of permanent ROW, which would not be restored but would serve to provide adequate space for aboveground facilities, including pump stations and valves, for the life of the pipeline. Impacts associated with the construction of two pump stations on the Keystone Cushing Extension include approximately 12 acres of land to be disturbed during construction. This acreage would be retained for permanent aboveground facilities.

Almost all of the land affected by the construction and operation of the Project would be privately owned; BLM holds the majority of the publicly owned lands.

2.1.5 Pipeline ROW

The installation of the new 36-inch diameter pipeline would occur within a 110-foot-wide construction ROW, consisting of a 60-foot temporary easement and a 50-foot permanent easement. **Figure 2.1-8** illustrates typical construction in areas not co-located with other ROWs. **Figures 2.1-9** through **2.1-10** illustrate the typical construction ROW and equipment work locations in areas where the pipeline would be co-located with an existing linear feature. The construction ROW would be reduced to 85 feet in certain areas, which could include some wetlands, cultural sites, shelterbelts, residential areas, and commercial/industrial areas.

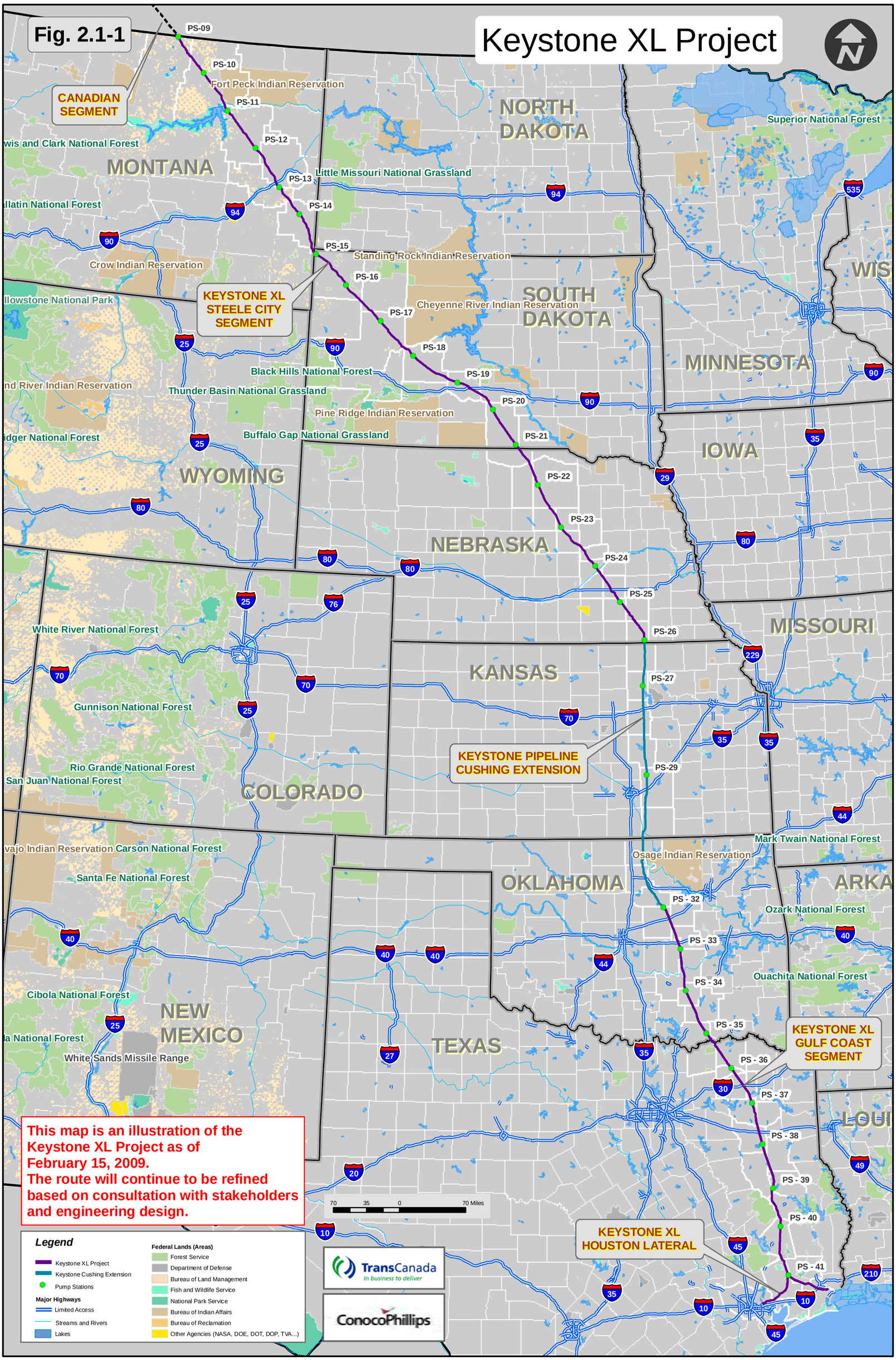
Fig. 2.1-1
Keystone XL Project
CANADIAN SEGMENT
KEYSTONE XL STEELE CITY SEGMENT
KEYSTONE PIPELINE CUSHING EXTENSION
KEYSTONE XL GULF COAST SEGMENT
KEYSTONE XL HOUSTON LATERAL
PS-09
PS-10
PS-11
PS-12
PS-13
PS-14
PS-15
PS-16
PS-17
PS-18
PS-19
PS-20
PS-21
PS-22
PS-23
PS-24
PS-25
PS-26
PS-27
PS-29
PS - 32
PS - 33
PS - 34
PS - 35
PS - 36
PS - 37
PS - 38
PS - 39
PS - 40
PS - 41
MONTANA
NORTH DAKOTA
SOUTH DAKOTA
MINNESOTA
IOWA
WYOMING
NEBRASKA
KANSAS
MISSOURI
COLORADO
OKLAHOMA
NEW MEXICO
TEXAS
Fort Peck Indian Reservation
Little Missouri National Grassland
Standing Rock Indian Reservation
Crow Indian Reservation
Cheyenne River Indian Reservation
Black Hills National Forest
Thunder Basin National Grassland
Pine Ridge Indian Reservation
Buffalo Gap National Grassland
White River National Forest
Gunnison National Forest
Rio Grande National Forest
San Juan National Forest
Santa Fe National Forest
Cibola National Forest
White Sands Missile Range
Superior National Forest
Mark Twain National Forest
Osage Indian Reservation
Ozark National Forest
Ouachita National Forest
This map is an illustration of the Keystone XL Project as of February 15, 2009.
The route will continue to be refined based on consultation with stakeholders and engineering design.
70 35 0 70 Miles
Legend
Keystone XL Project
Keystone Cushing Extension
Pump Stations
Major Highways
Limited Access
Streams and Rivers
Lakes
Federal Lands (Areas)
Forest Service
Department of Defense
Bureau of Land Management
Fish and Wildlife Service
National Park Service
Bureau of Indian Affairs
Bureau of Reclamation
Other Agencies (NASA, DOE, DOT, DOP, TVA...)
TransCanada
In business to deliver
ConocoPhillips

Fig. 2.1-2

Keystone XL Project – Montana

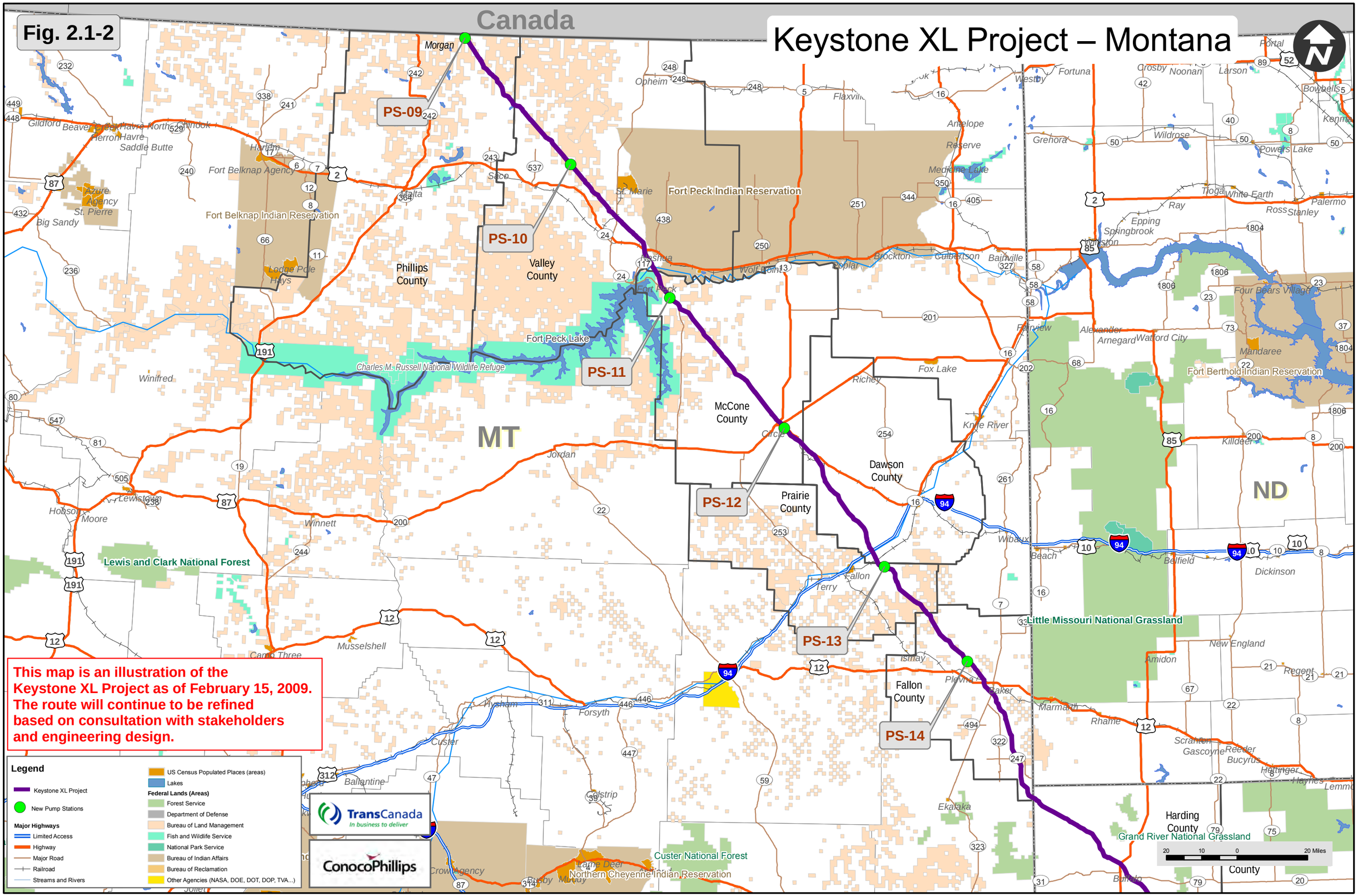

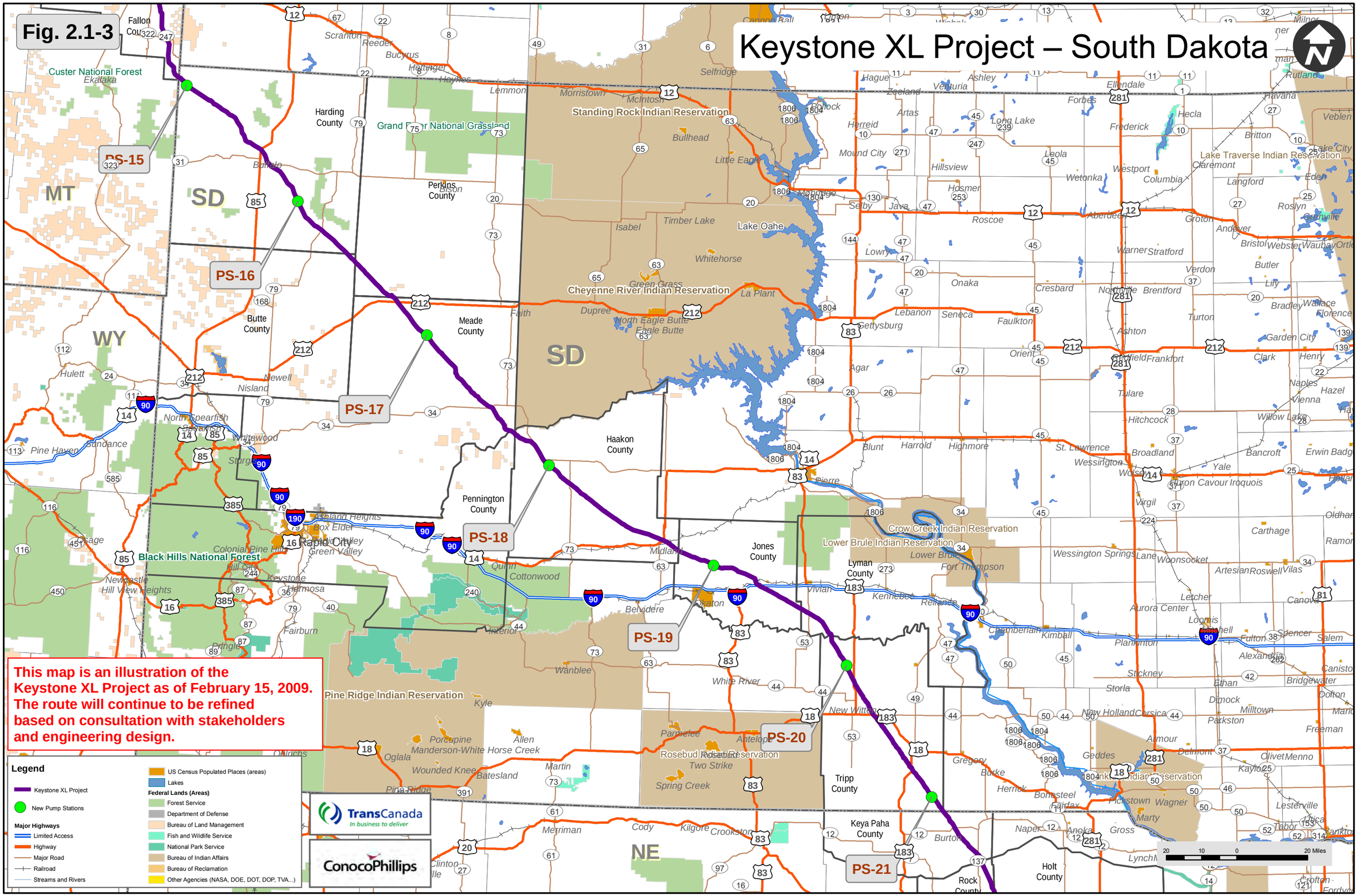
Fig. 2.1-3
Keystone XL Project – South Dakota
PS-15
PS-16
PS-17
PS-18
PS-19
PS-20
PS-21
MT
SD
WY
NE
Custer National Forest
Black Hills National Forest
Grand River National Grassland
Standing Rock Indian Reservation
Cheyenne River Indian Reservation
Pine Ridge Indian Reservation
Crow Creek Indian Reservation
Lower Brule Indian Reservation
Lake Traverse Indian Reservation
Harding County
Perkins County
Meade County
Butte County
Haakon County
Pennington County
Jones County
Lyman County
Tripp County
Keya Paha County
Holt County
Rock County
Rapid City
This map is an illustration of the Keystone XL Project as of February 15, 2009. The route will continue to be refined based on consultation with stakeholders and engineering design.
Legend
Keystone XL Project
New Pump Stations
Major Highways
Limited Access
Highway
Major Road
Railroad
Streams and Rivers
US Census Populated Places (areas)
Lakes
Federal Lands (Areas)
Forest Service
Department of Defense
Bureau of Land Management
Fish and Wildlife Service
National Park Service
Bureau of Indian Affairs
Bureau of Reclamation
Other Agencies (NASA, DOE, DOT, DOP, TVA...)
TransCanada
In business to deliver
ConocoPhillips
20 10 0 20 Miles

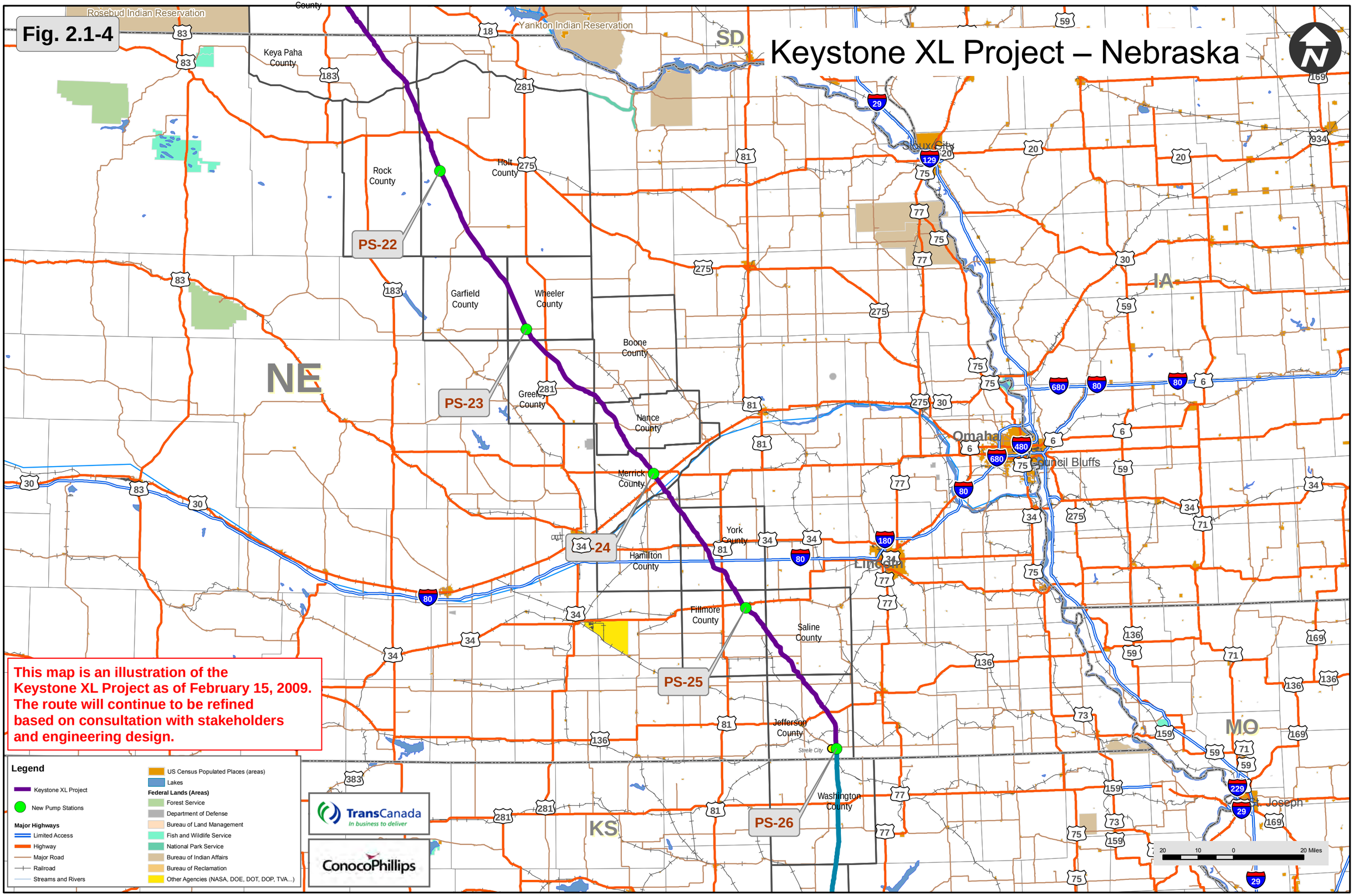
Fig. 2.1-4
Keystone XL Project – Nebraska
Rosebud Indian Reservation
Tripp County
Keya Paha County
Yankton Indian Reservation
SD
Rock County
Holt County
Garfield County
Wheeler County
Boone County
Greeley County
Nance County
Merrick County
Hamilton County
York County
Fillmore County
Saline County
Jefferson County
Steele City
Washington County
NE
IA
MO
KS
Sioux City
Omaha
Council Bruffs
Lincoln
St. Joseph
PS-22
PS-23
PS-24
PS-25
PS-26
This map is an illustration of the Keystone XL Project as of February 15, 2009. The route will continue to be refined based on consultation with stakeholders and engineering design.
Legend
Keystone XL Project
New Pump Stations
Major Highways
Limited Access
Highway
Major Road
Railroad
Streams and Rivers
US Census Populated Places (areas)
Lakes
Federal Lands (Areas)
Forest Service
Department of Defense
Bureau of Land Management
Fish and Wildlife Service
National Park Service
Bureau of Indian Affairs
Bureau of Reclamation
Other Agencies (NASA, DOE, DOT, DOP, TVA...)
TransCanada
In business to deliver
ConocoPhillips
20 10 0 20 Miles

Fig. 2.1-5

Keystone XL Project – Kansas

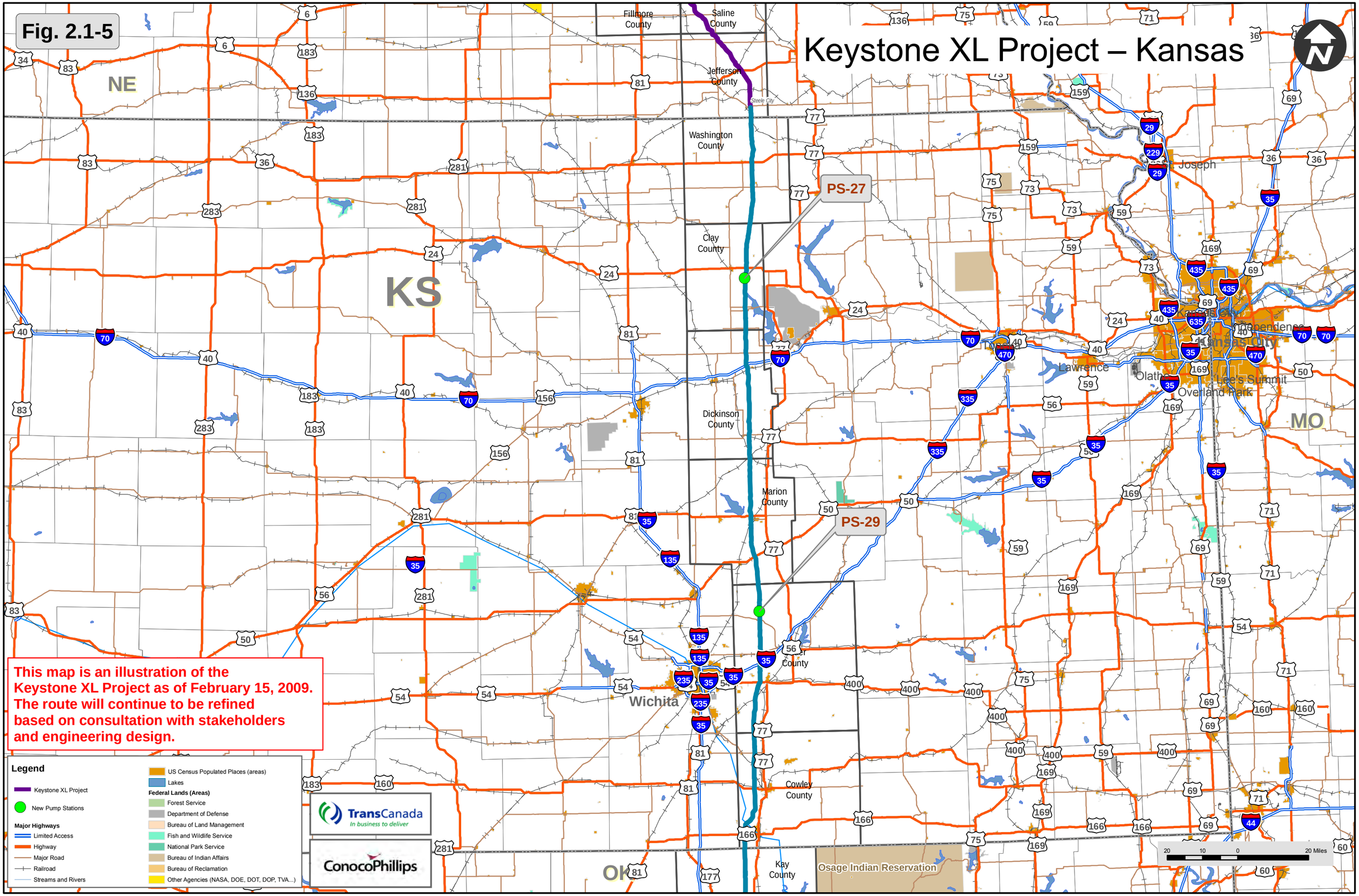

Fig. 2.1-6

Keystone XL Project – Oklahoma

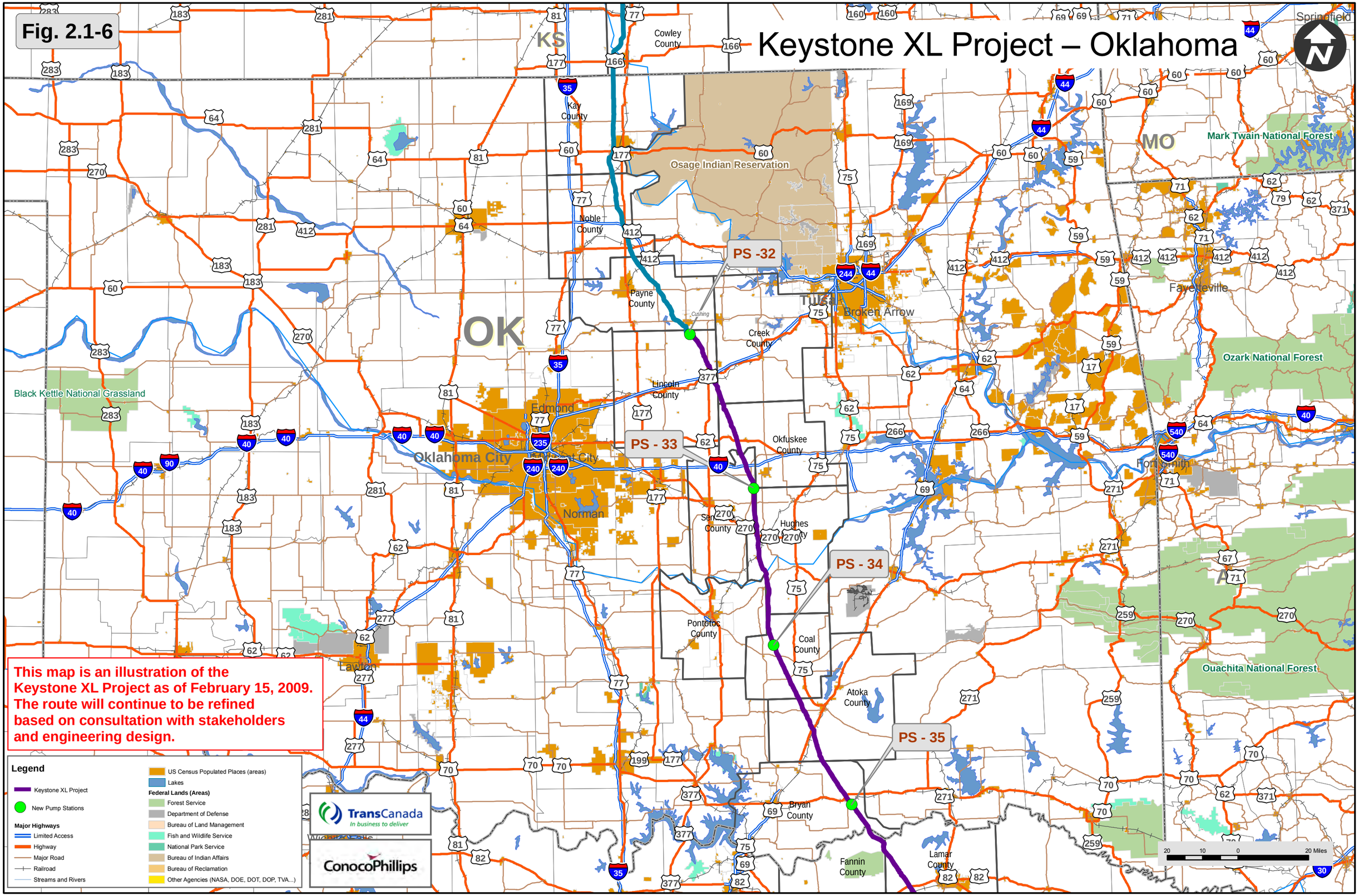

This map is an illustration of the Keystone XL Project as of February 15, 2009. The route will continue to be refined based on consultation with stakeholders and engineering design.

Fig. 2.1-7

Keystone XL Project – Texas

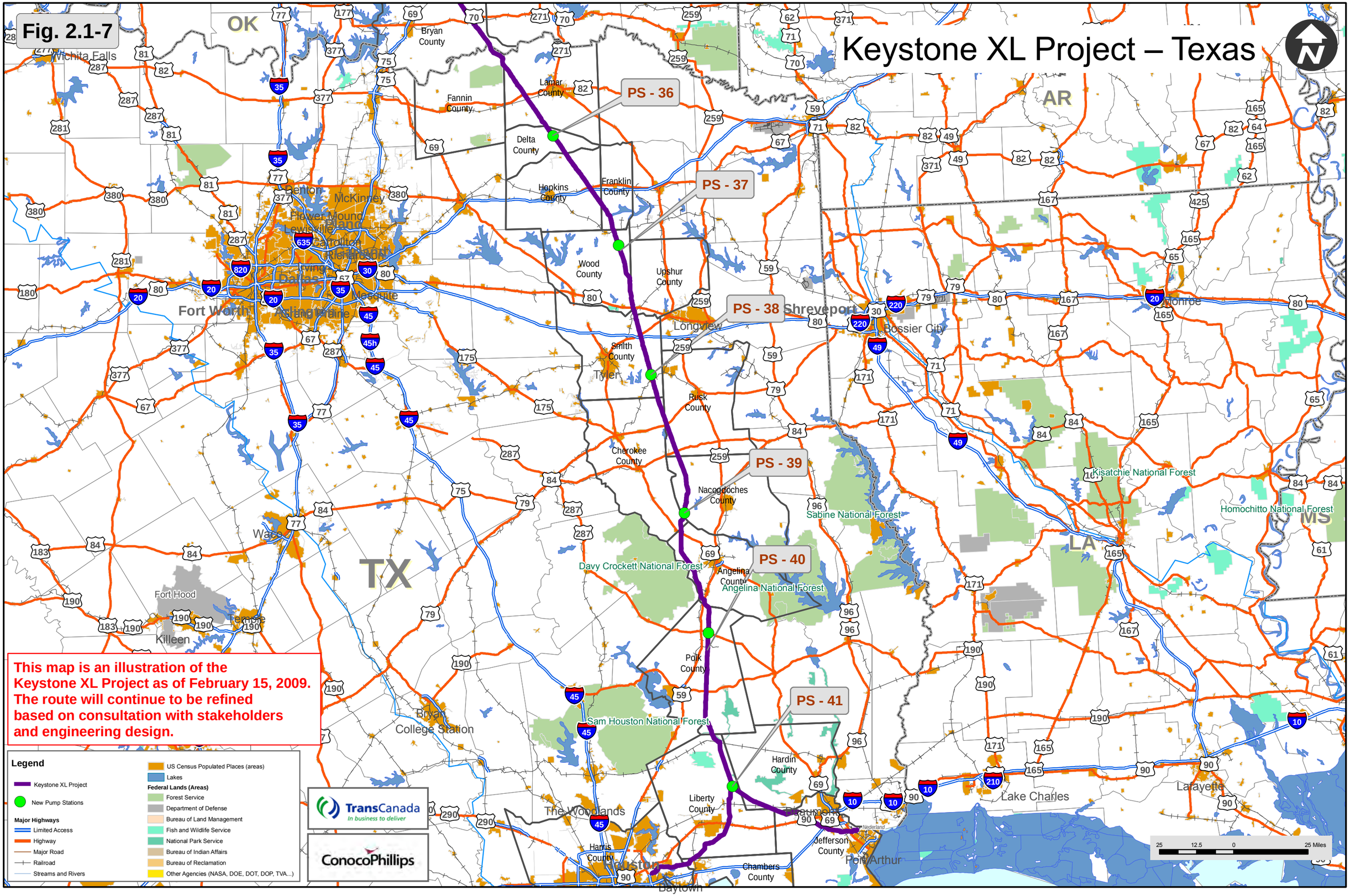

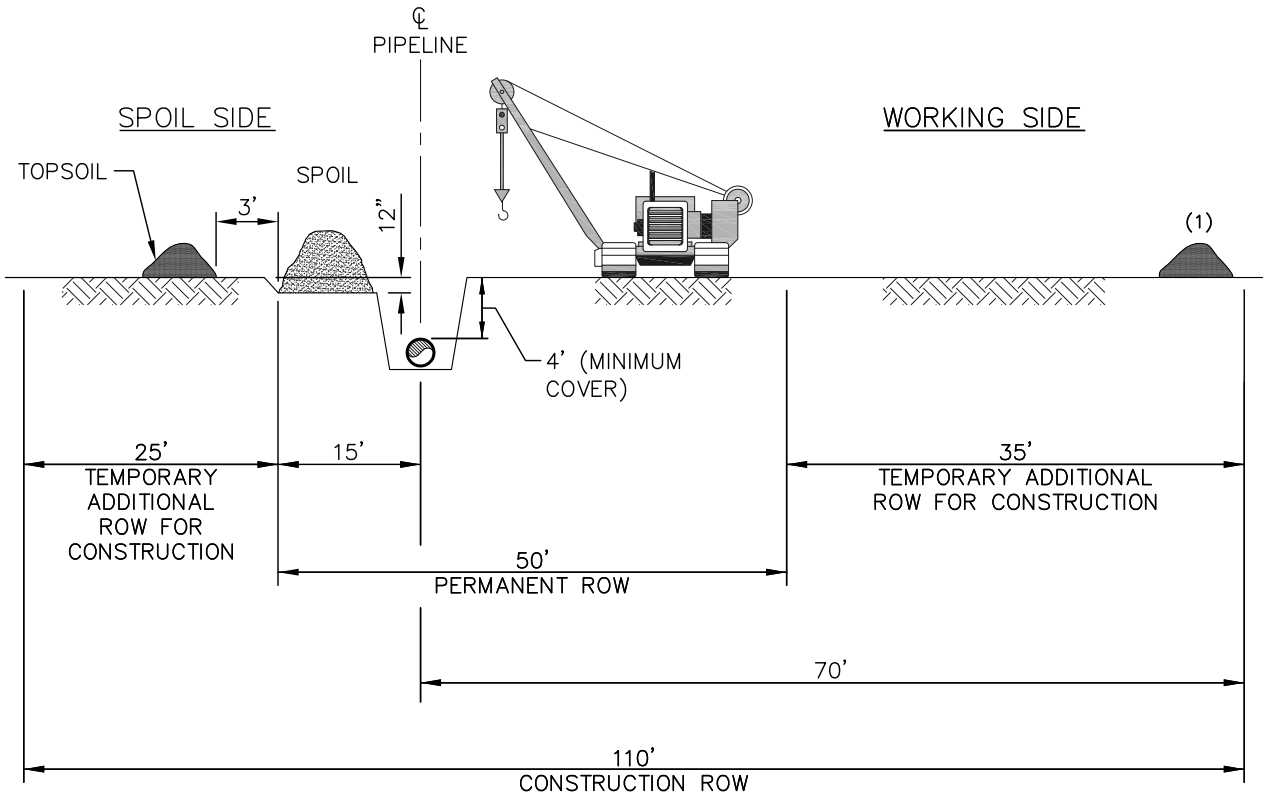

(1) ALTERNATE TOPSOIL PLACEMENT LOCATIONS

REVISIONS		
1	11.05.08	REMOVED TOPSOIL NEAR TRENCH
2	05.29.09	REVISED DIMENSIONS & TOPSOIL LOCATION

G:\2000DraftingandGIS\CADFiles\Drawings\ER\Constr_ROW_Details_Sect2_REV2.dwg 5/29/2009 12:11:02 PM CDT

TransCanada
In business to deliver
KEYSTONE XL PROJECT

PREPARED BY:
TROW ENGINEERING CONSULTANTS, INC.
7505 NW Tiffany Springs Pkwy., Suite 400
Northpointe Circle I
Kansas City, MO 64153
Phone: 1-816-801-7063
Fax: 1-816-801-7048
Trow

LAST PLOT DATE: Fri, 12 Jun 2009 - 4:27pm

ORIGINATOR: JOE A. NELSON (NAME) 9/08/08 (DATE)

CHECKED BY: TW

APPROVED BY: SS

FIGURE 2.1-8

FIA #	CHAINAGE:	DISCIPLINE #
1399		03

TITLE: TYPICAL 110' CONSTRUCTION RIGHT-OF-WAY (36" PIPELINE) WITH TOPSOIL REMOVAL ONLY OVER TRENCH LINE

SCALE	DWG No	REV
N.T.S.	1399-03-ML-03-458	2

CADD DRAWING: DO NOT MAKE MANUAL REVISIONS PLOTTED SIZE: ANSI A (8.5x11)

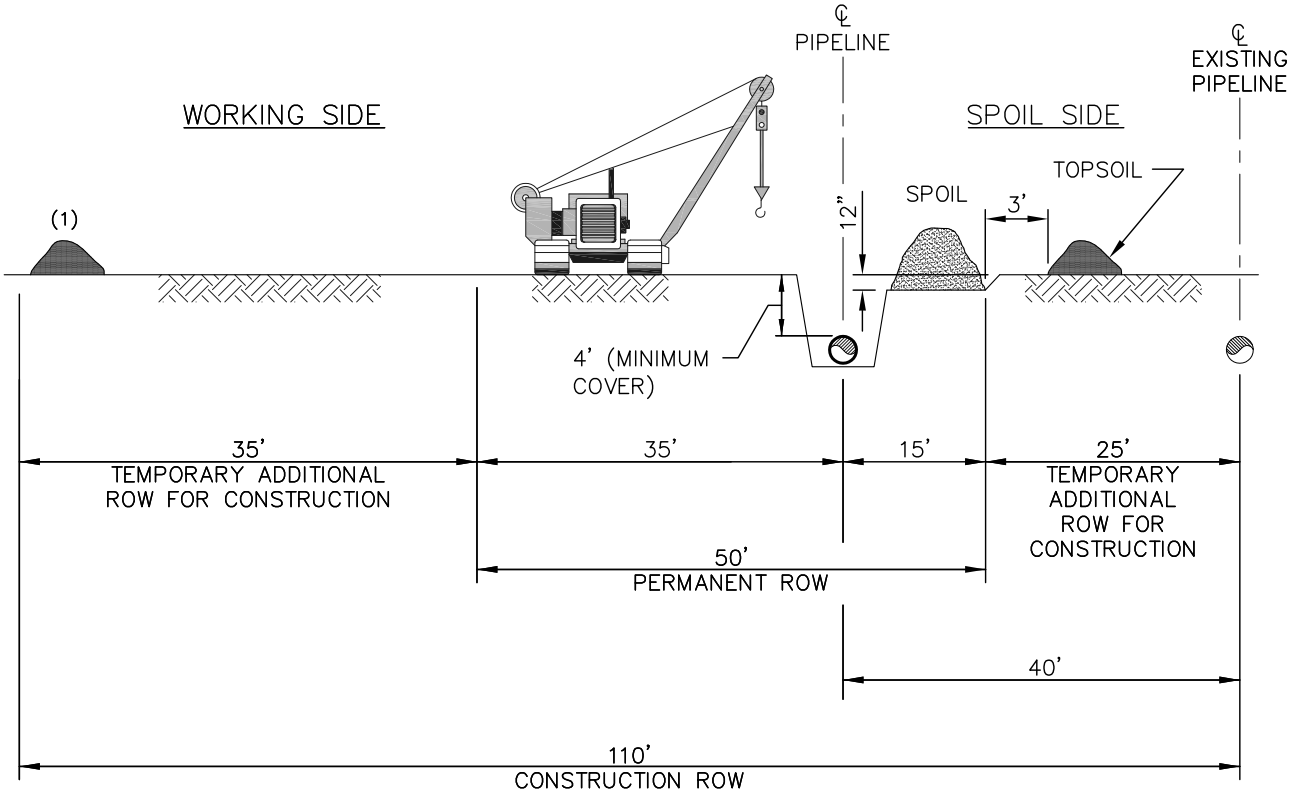

(1) ALTERNATE TOPSOIL PLACEMENT LOCATIONS

REVISIONS		
1	11.05.08	REMOVED TOPSOIL NEAR TRENCH; MODIFIED TITLE
2	05.29.09	REVISED DIMENSIONS & TOPSOIL LOCATION

G:\2000Drafting and GIS\CADFiles\Drawings\ER\Constr_ROW_Details_Sect2_REV2.dwg 5/29/2009 12:11:02 PM CDT

TransCanada
In business to deliver

KEYSTONE XL PROJECT

PREPARED BY:
TROW ENGINEERING CONSULTANTS, INC.
7505 NW Tiffany Springs Pkwy., Suite 400
Northpointe Circle I
Kansas City, MO 64153
Phone: 1-816-801-7063
Fax: 1-816-801-7048
Trow

ORIGINATOR: JOE A. NELSON (NAME) 9/08/08 (DATE)

CHECKED BY: TW

APPROVED BY: SS

FIGURE 2.1-9

FIA # 1399 | CHAINAGE: | DISCIPLINE # 03

TITLE: TYPICAL 110' CONSTRUCTION RIGHT-OF-WAY (36" PIPELINE) SPOIL SIDE ADJACENT AND CO-LOCATION TO EXISTING PIPELINE

SCALE N.T.S. | DWG No 1399-03-ML-03-460 | REV 2

LAST PLOT DATE: Fri, 12 Jun 2009 - 4:28pm

CADD DRAWING: DO NOT MAKE MANUAL REVISIONS PLOTTED SIZE: ANSI A (8.5x11)

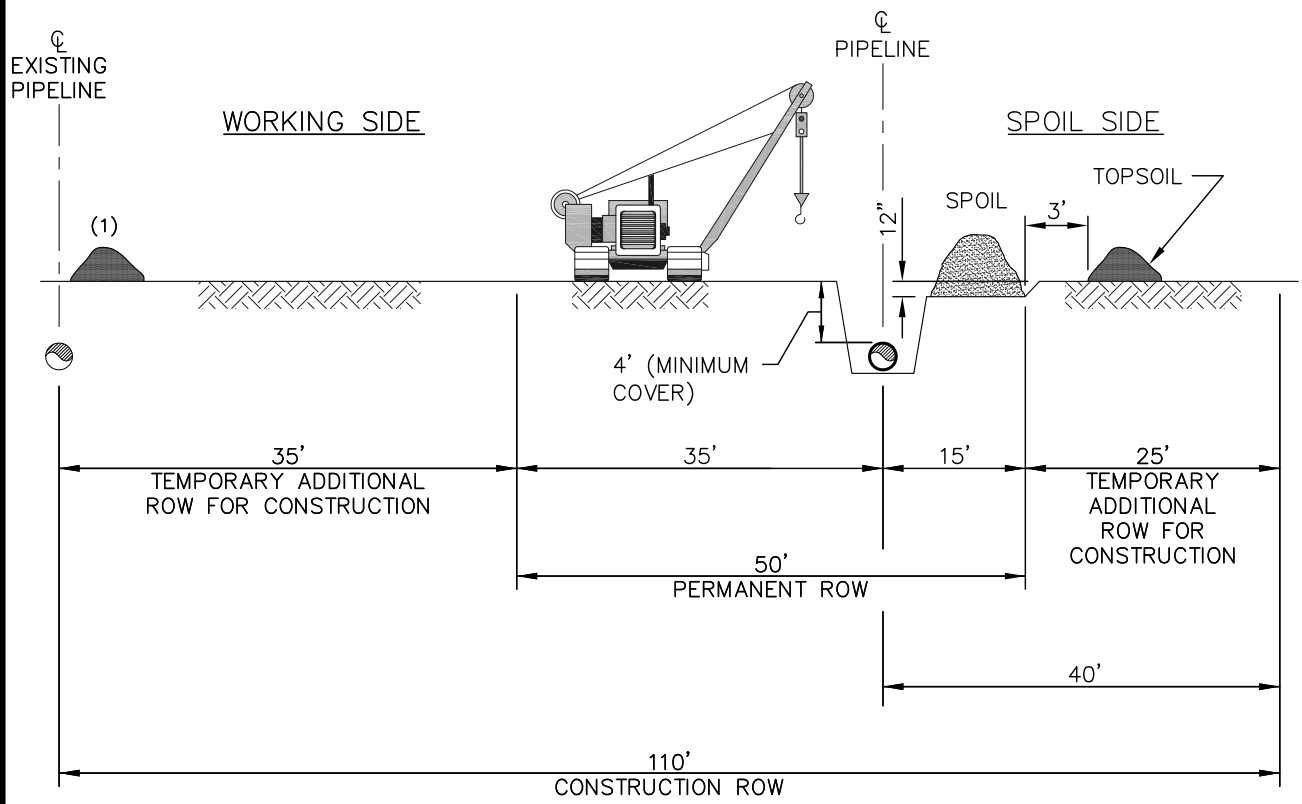

(1) ALTERNATE TOPSOIL PLACEMENT LOCATIONS

REVISIONS		
1	11.05.08	REMOVED TOPSOIL NEAR TRENCH; MODIFIED TITLE
2	05.29.09	REVISED DIMENSIONS & TOPSOIL LOCATION

G:\2000DraftingandGIS\CADFiles\Drawings\ER\Constr_ROW_Details_Sect2_REV2.dwg 5/29/2009 12:11:02 PM CDT

TransCanada
In business to deliver
KEYSTONE XL PROJECT

PREPARED BY:
TROW ENGINEERING CONSULTANTS, INC.
7505 NW Tiffany Springs Pkwy., Suite 400
Northpointe Circle I
Kansas City, MO 64153
Phone: 1-816-801-7063
Fax: 1-816-801-7048
Trow

ORIGINATOR: JOE A. NELSON (NAME) 9/08/08 (DATE)

CHECKED BY: TW

APPROVED BY: SS

FIGURE 2.1-10

FIA #	CHAINAGE:	DISCIPLINE #
1399		03

TITLE: TYPICAL 110' CONSTRUCTION RIGHT-OF-WAY (36" PIPELINE) WORKING SIDE ADJACENT AND CO-LOCATION TO EXISTING PIPELINE

SCALE	DWG No	REV
N.T.S.	1399-03-ML-03-462	2

LAST PLOT DATE: Fri, 12 Jun 2009 - 4:29pm

CADD DRAWING: DO NOT MAKE MANUAL REVISIONS PLOTTED SIZE: ANSI A (8.5x11)

Table 2.1-2 Summary of Lands Affected

Facility	Land Affected During Construction[1] (acres)	Land Affected During Operation[2] (acres)
Steele City Segment		
Montana		
Pipeline ROW	3,767	1,712
Additional Temporary Workspace Areas (TWAs)[6]	278	0
Pipe Stockpile Sites, Rail Sidings, and Contractor Yards	521	0
Construction Camps	160	0
Pump Stations/Delivery Facilities	42	42
Access Roads	265	22
Montana Subtotal[3,5]	5,033	1,776
South Dakota		
Pipeline ROW	4,188	1,904
Additional TWAs[6]	255	0
Pipe Stockpile Sites, Rail Sidings, and Contractor Yards	579	0
Construction Camps	160	0.0
Pump Stations/Delivery Facilities	42	42
Access Roads[7]	103	9
South Dakota Subtotal[3,5]	5,327	1,955
Nebraska		
Pipeline ROW	3,388	1,540
Additional TWAs[6]	186	0
Pipe Stockpile Sites, Rail Sidings, and Contractor Yards	525	0
Pump Stations/Delivery Facilities	42	42
Access Roads[7]	56	0
Tank Farm	50	50
Nebraska Subtotal[3,5]	4,247	1,632
Steele City Subtotal[3,5]	14,607	5,363
Keystone Cushing Extension[5]		
Kansas		
Pipeline ROW	0	0
Additional TWAs[6]	0	0
Pipe Stockpile Sites, Rail Sidings, and Contractor Yards	0	0
Pump Stations/Delivery Facilities	12	12
Access Roads[7]	0	0
Kansas Subtotal [3,4,5]	12	12
Keystone Cushing Extension Subtotal[3,4, 5]	12	12

Table 2.1-2 Summary of Lands Affected

Facility	Land Affected During Construction[1] (acres)	Land Affected During Operation[2] (acres)
Gulf Coast Segment		
Oklahoma		
Pipeline ROW	2,044	942
Additional TWAs[6]	130	0
Pipe Stockpile Sites, Rail Sidings, and Contractor Yards	465	0
Pump Stations/Delivery Facilities	32	32
Access Roads[7]	103	19
Oklahoma Subtotal[3, 5]	2,774	993
Texas		
Pipeline ROW	4,180	1,965
Additional TWAs[6]	283	0
Pipe Stockpile Sites, Rail Sidings, and Contractor Yards	796	0
Pump Stations/Delivery Facilities	48	48
Access Roads[7]	329	55
Texas Subtotal	5,636	2,068
Houston Lateral		
Texas		
Lateral ROW	652	294
Additional TWAs[6]	32	0
Pipe Stockpile Sites, Rail Sidings, and Contractor Yards	5	0
Access Roads[7]	62	19
Houston Lateral Subtotal[3]	751	313
Gulf Coast and Houston Lateral Subtotal[3]	9,161	3,374
Project Total[3,4, 5, 6]	23,780	8,749

1 Disturbance is based on a total of 110-foot construction ROW for a 36-inch diameter pipe, except in certain wetlands, cultural sites, shelterbelts, residential areas, and commercial/industrial areas where an 85-foot construction ROW would be used, or in areas requiring extra width for workspace necessitated by site conditions. Disturbance also includes pipe stockpile sites, contractor yards, rail yards, and construction camps

2 Operational acreage was estimated based on a 50-foot permanent ROW in all areas. All pigging facilities would be located within either pump stations or delivery facility sites. Intermediate MLVs and densitometers would be constructed within the construction easement and operated within the permanently maintained 50-foot ROW. Other MLVs, check valves and block valves, and meters would be located within the area associated with a pump station, delivery site or permanent ROW. Consequently, the acres of disturbance for these aboveground facilities are captured within the Pipeline ROW and Pump Station/Delivery Facilities categories within the table.

3 Discrepancies in total acreages are due to rounding.

4 Disturbance associated with the Keystone Cushing Extension in this table is for the two new pump stations to be constructed for this project. For discussion of previously permitted disturbance associated with the construction of the Keystone Cushing Extension see TransCanada (2006).

5 Includes disturbances associated with construction of the Steele City Segment, the Gulf Coast Segment, and the Houston Lateral. This total includes 12 acres associated with construction and operation of new pump stations along the Keystone Cushing Extension.

6 Includes staging areas at approximately 5 acres. Does not include the potential for extended additional TWAs necessary for construction in rough terrain or in unstable soils. These locations are currently undergoing identification and analysis. Potential disturbance associated with these areas would be included in supplemental filings when these additional TWAs are identified.

7 Access road temporary and permanent disturbance is based on 30-foot width; all non-public roads are conservatively estimated to require upgrades and maintenance during construction.

Thirty miles (4 percent) of the Steele City Segment would be located within approximately 300 feet of existing pipelines, utilities, or road ROWs. The remainder of the pipeline, 821 miles (96 percent), would be situated in new ROW.

No new pipe would be constructed along the Keystone Cushing Extension as part of the Project.

Three hundred and ninety-three miles (82 percent) of the Gulf Coast Segment would be located within approximately 300 feet of existing pipelines, utilities, or road ROWs. The remainder of the pipeline, 87 miles (18 percent), would be situated in new ROW.

Twenty miles (41percent) of the Houston Lateral would be located within approximately 300 feet of existing pipelines, utilities, or road ROWs. The remainder of the pipeline, 29 miles (59 percent), would be situated in new ROW.

2.1.6 Additional Temporary Workspace Areas

In addition to the typical construction ROW, Keystone has identified typical types of additional TWAs that would be required. These include areas requiring special construction techniques (e.g., river, wetland, and road/rail crossings; horizontal directional drill (HDD) entry and exit points; steep slopes; and rocky soils) and construction staging areas. These preliminary areas have been used to quantify impacts of the Project.

The location of additional TWAs would be adjusted as the Project continues to be refined. This would involve the adjustment of additional temporary workspace as necessary related to actual wetland and waterbody locations, side-hill cuts, and rough terrain. Keystone would adjust additional TWAs at the prescribed setback distance from wetland and waterbody features unless impractical and as determined on a site-specific basis.

2.1.7 Pipe Stockpile Sites, Railroad Sidings, and Contractor Yards

Extra workspace areas away from the construction ROW would be required during the construction of the Project to serve as pipe storage sites, railroad sidings, and contractor yards (**Table 2.1-3**). Pipe stockpile sites along the pipeline route have typically been identified in proximity to railroad sidings. To the extent practical, Keystone would use existing commercial/industrial sites or sites that previously were used for construction. Existing public or private roads would be used to access each yard. Both pipe stockpile sites and contractor yards would be used on a temporary basis and would be restored, as appropriate, upon completion of construction. Survey of pipe stockpile sites, railroad sidings, and contractor yards would be completed prior to construction.

Table 2.1-3 Locations and Acreage of Potential Pipe Stockpile Sites, Railroad Sidings, and Contractors Yards

State/Type of Yard	Counties	Combined Acreage[1]
Montana		
Contractor Yards (5)	Dawson, Fallon, McCone, Valley (2)	152
Railroad Siding (5)[2]	Valley, Fallon, Roosevelt, Dawson (2)	120
Pipe Stockpile Sites (9)	Phillips, Valley (2), McCone (2), Dawson (2), Fallon (2)	269
Construction Camp (2)	Valley, Fallon	160
South Dakota		
Contractor Yards (5)	Gregory, Haakon, Harding, Meade, Jones	151
Railroad Siding (5)[2]	Butte, Pennington (2), Stanley, Hutchinson	100
Pipe Stockpile Sites	Harding (3), Meade (2), Haakon (2), Jones (2), Tripp (2)	328

Table 2.1-3 Locations and Acreage of Potential Pipe Stockpile Sites, Railroad Sidings, and Contractors Yards

State/Type of Yard	Counties	Combined Acreage[1]
(11)		
Construction Camp (2)	Meade, Tripp	160
Nebraska		
Contractor Yards (7)	Gage, Holt (2), York, Jefferson, Merrick, Greeley	191
Railroad Siding (3)[2]	Merrick, York, Jefferson	60
Pipe Stockpile Sites (9)	Keya Paha, Holt, Wheeler, Greeley, Nance, Hamilton, Fillmore, Jefferson (2)	274
Kansas		
Contractor Yards	None	0
Pipe Stockpile Sites	None	0
Oklahoma		
Contractor Yards (1)	Hughes	27
Railroad Siding (3)[2]	Grady, Pittsburg, Pottawatomie	110
Pipe Stockpile Sites (3)	Lincoln, Grady, Bryan	328
Texas		
Contractor Yards (10)	Liberty, Lamar (2), Angelina (2), Houston, Nacogdoches, Jefferson, Titus, Rusk	154
Railroad Sidings (5)[2]	Lamar, Angelina, Hardin, Titus (2)	28
Pipe Stockpile Sites (7)	Smith, Orange, Jefferson, Fannin, Lamar, Polk (2)	619

[1] Land use of these sites is currently under evaluation. The final acreage may be reduced to avoid biological or cultural resources, if any are identified.

[2] Estimated size and location.

2.1.8 Construction Camps

Some portions of the Project in Montana and South Dakota lack adequate temporary housing, as further discussed in the Environmental Report. In these remote locations, the construction phase of the Project would require the installation of additional temporary housing for workers. It is currently anticipated that four temporary construction camps are needed, to be located in the general vicinity of Nashua, and Baker, Montana, and close to Union Center and Winner, South Dakota. Each camp would be approximately 80 acres in size but would include pipe and/or contractor yard space as well as the camp itself. These locations would be permitted, constructed, and operated in compliance with applicable county, state, and federal regulations. Actual site locations for the camps have not yet been acquired.

2.1.9 Access Roads

The Project would use public and existing private roads to provide access to most of the construction ROW. Acreages of access roads are provided in **Table 2.1-2**. Paved roads are not likely to require improvement or maintenance prior to or during construction. Gravel roads and dirt roads may require maintenance during the construction period due to high use. Road improvements such as blading and filling would be restricted to the

existing road footprint. Private roads and any new temporary access roads would be used and maintained only with permission of the landowner or land management agency.

Access pads would be placed at ROW crossings of public and private roads, requiring a total of about 88,000 cubic yards of gravel. There are approximately 1,590 such road crossings.

There would be approximately 400 temporary access roads for construction, which would require approximately 37,500 cubic yards of gravel for access pads and culverts.

There would be 50 permanent access roads to Project facilities, requiring approximately 244,000 cubic yards of gravel.

Keystone proposes to construct short, permanent access roads from public roads to the proposed tank farm, pump stations, delivery facilities, and intermediate MLVs. The estimated acres of disturbance associated with the new proposed permanent access roads are included in the Aboveground Facility discussion (Section 2.1.10). Prior to construction, Keystone would finalize the location of new permanent access roads along with any temporary access roads. At a minimum, construction of new permanent access roads would require completion of cultural resources and biological surveys, along with the appropriate State Historic Preservation Office and USFWS consultations and approvals. Other state and local permits also may be required prior to construction. In the future, maintenance of newly created access roads would be the responsibility of Keystone.

2.1.10 Aboveground Facilities

The Project would require approximately 368 acres of land along the Project segments for aboveground facilities, including pump stations, delivery facilities, densitometer sites, intermediate MLVs, and the tank farm. Gravel would be used to stabilize the land for permanent facilities, including pump stations, valve sites, and permanent access roads.

2.1.10.1 Pump Stations

A total of 30 new pump stations, each situated on approximately 5- to 10-acre sites, would be constructed; 18 would be on the Steele City Segment, 10 on the Gulf Coast Segment, and 2 on the Keystone Cushing Extension in Kansas (**Table 2.1-1**). Each new pump station would consist of up to six pumps driven by electric motors, an electrical building, an electrical substation, two sump tanks, a remotely operated MLV, a communication tower, a small maintenance building, and a parking area for station maintenance personnel. Stations would operate on locally purchased electric power and would be fully automated for unmanned operation. The pump stations would have a uninterruptable power supply or all communication and specific controls equipment in the case of a power failure. No back up generators at pump stations are planned and, therefore, no fuel storage tanks would be located at pump stations. Communication towers at pump stations would generally be approximately 33 feet in height. However, antenna height at select pump stations, as determined upon completion of a detailed engineering study, may be taller, but in no event would exceed a maximum height of 190 feet. The pipe entering and exiting the pump station sites would be located below grade. The pipe manifolding connected with the pump stations would be aboveground. **Figures 2.1-11** and **2.1-12** show typical pump station configurations. Information related to power lines providing power to the pump stations is contained in Section 7 of the Environmental Report.

2.1.10.2 Tank Farm

Keystone proposes to construct one tank farm on an approximate 50-acre site. The tank farm would consist of three 350,000-barrel tanks to be used operationally for the management of oil movement through the system, as well as four booster pumps, one sump tank, two ultrasonic meters, pig launchers and receivers, two buildings, and parking for maintenance personnel. The tank farm would operate on locally purchased electricity and would be fully automated for unmanned operation.

2.1.10.3 Other Aboveground Facilities

Keystone proposes to install two delivery facilities along the Project route, one at Nederland and one at Moore Junction, Texas (**Table 2.1-1**). The delivery facilities would include pressure regulating, sampling, crude oil measurement equipment, a densitometer, a pig receiver, and one quality assurance building.

Keystone proposes to construct 74 intermediate MLV sites along the new pipeline ROW. Intermediate MLVs would be sectionalizing block valves generally constructed within a fenced 30- by 40-foot site located on the permanent easement. Remotely operated intermediate MLVs would be located at major river crossings and upstream of sensitive waterbodies and at intermediate locations. Additional remotely operated MLVs would be located at

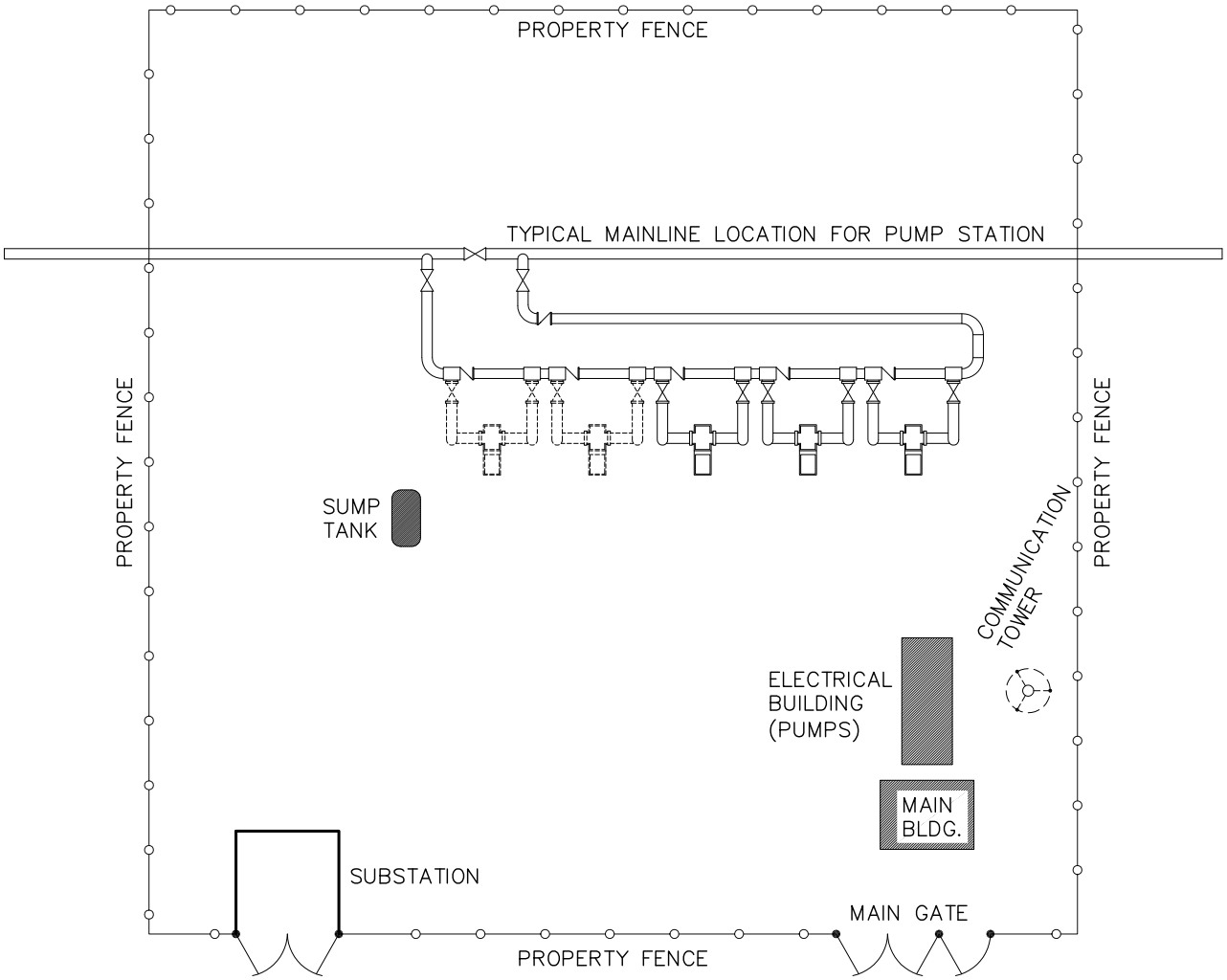

NOTES:

1. SITE CONTAINS A DRIVEWAY FROM GATE TO GATE.
2. FENCED AREA WILL CONTAIN A MINIMUM OF 4" THICK GRAVEL PAD.

REVISIONS

G:\2000Drafting and GIS\CADFiles\Drawings\ER\APPENDIX_F\FIGURES_2.1-11_2.1-12.dwg 6/30/2009 10:36:36 AM CDT

TransCanada
In business to deliver
KEYSTONE XL PROJECT

PREPARED BY:
TROW ENGINEERING CONSULTANTS, INC.
7505 NW Tiffany Springs Pkwy., Suite 400
Northpointe Circle I
Kansas City, MO 64153
Phone: 1-816-801-7063
Fax: 1-816-801-7048
Trow

ORIGINATOR: JOE A. NELSON (NAME) 9/08/08 (DATE)

CHECKED BY: TW

APPROVED BY: SS

FIGURE 2.1-11

FIA # 1399 | CHAINAGE: | DISCIPLINE # 01

TITLE: TYPICAL PUMP STATION WITHOUT PIGGING FACILITIES

SCALE: N.T.S. | DWG No 1399-01-10-03-700 | REV

LAST PLOT DATE: Tue, 30 Jun 2009 - 10:49am

CADD DRAWING: DO NOT MAKE MANUAL REVISIONS PLOTTED SIZE: ANSI A (8.5x11)

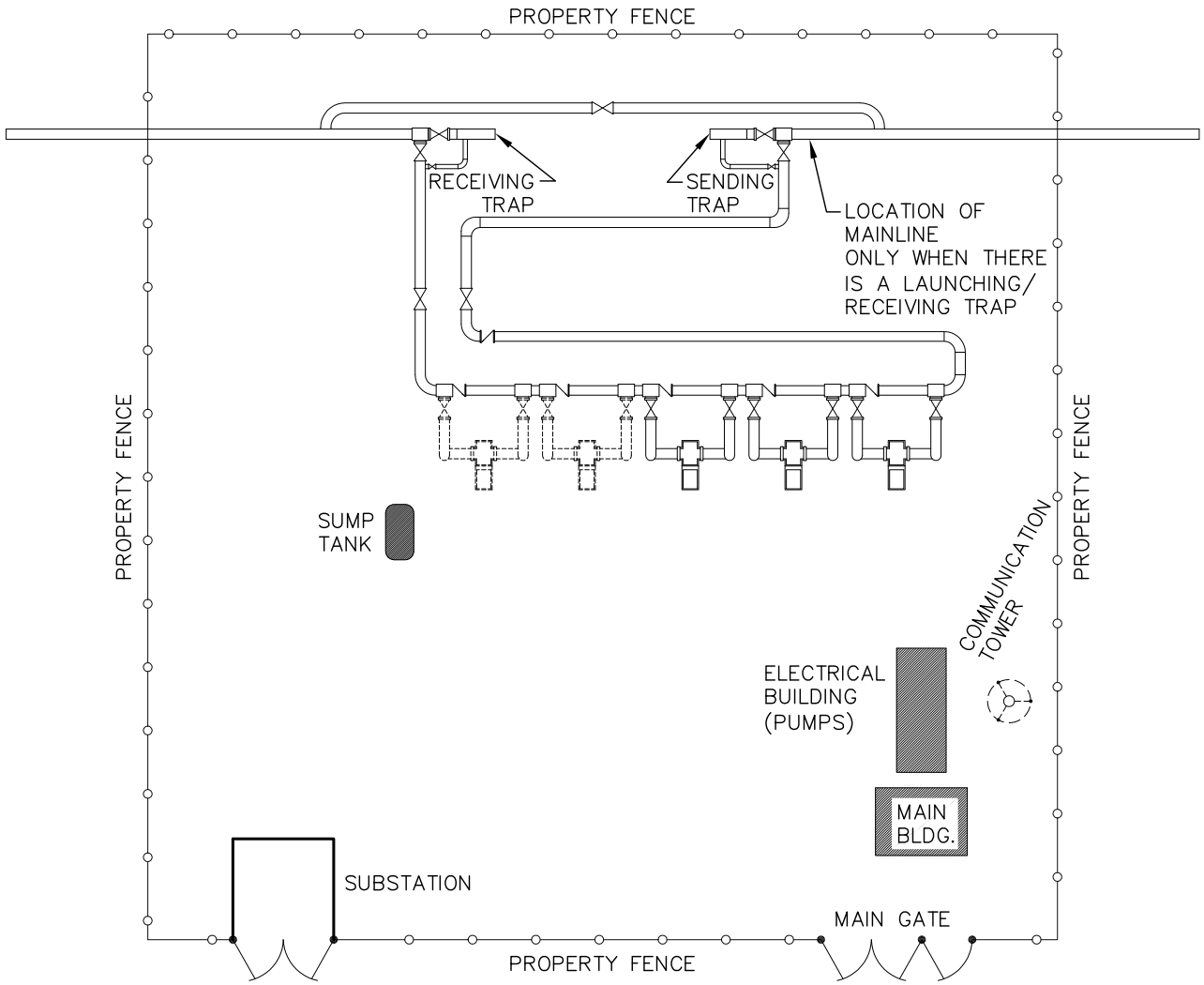

NOTES:

1. SITE CONTAINS A DRIVEWAY FROM GATE TO GATE.
2. FENCED AREA WILL CONTAIN A MINIMUM OF 4" THICK GRAVEL PAD.

REVISIONS

G:\2000Drafting and GIS\CADFiles\Drawings\ER\APPENDIX_F\FIGURES_2.1-11_2.1-12.dwg 6/30/2009 10:36:36 AM CDT

TransCanada
In business to deliver
KEYSTONE XL PROJECT

PREPARED BY:
TROW ENGINEERING CONSULTANTS, INC.
7505 NW Tiffany Springs Pkwy., Suite 400
Northpointe Circle I
Kansas City, MO 64153
Phone: 1-816-801-7063
Fax: 1-816-801-7048
Trow

ORIGINATOR: JOE A. NELSON (NAME) 9/08/08 (DATE)

CHECKED BY: TW

APPROVED BY: SS

FIGURE 2.1-12

FIA # 1399 | CHAINAGE: | DISCIPLINE # 01

TITLE: TYPICAL PUMP STATION WITH PIGGING FACILITIES

SCALE: N.T.S. | DWG No 1399-01-10-03-701 | REV

LAST PLOT DATE: Tue, 30 Jun 2009 - 10:39am

CADD DRAWING: DO NOT MAKE MANUAL REVISIONS PLOTTED SIZE: ANSI A (8.5x11)

pump stations, as described in Section 2.1.10.1. These remotely operated valves can be activated to shut down the pipeline in the event of an emergency to minimize environmental impacts in the unlikely event of a spill. The actual spacing intervals between the MLVs and intermediate MLVs would be based upon the location of the pump stations, waterbodies wider than 100 feet, sensitive environmental resources, and other hydraulic profile considerations.

The Project would be designed to permit pigging of the entire length of the pipeline with minimal interruption of service. Pig launchers and/or receivers would be constructed and operated completely within the boundaries of the pump stations or delivery facilities. Launchers and receivers would allow pigging of the pipeline with high-resolution internal line inspection tools and maintenance cleaning pigs.

2.1.11 Construction Procedures

The proposed facilities would be designed, constructed, tested, and operated in accordance with all applicable requirements included in the US Department of Transportation (USDOT) regulations at 49 CFR 195, *Transportation of Hazardous Liquids by Pipeline*, and other applicable federal and state regulations. These regulations are intended to ensure adequate protection for the public and to prevent crude oil pipeline accidents. Among other design standards, 49 CFR 195 specifies pipeline material and qualification, minimum design requirements, and protection from internal, external, and atmospheric corrosion.

To manage construction impacts, Keystone would implement its Construction Mitigation and Reclamation Plan (CMRP) (**Appendix A**). This plan contains construction and mitigation procedures that would be used throughout the Project. Subsections address specific environmental conditions. Procedures to restore impacts to the permanent ROW are described in the CMRP.

The Project's Spill Prevention, Control, and Countermeasure (SPCC) Plan would be implemented to avoid or minimize the potential for harmful spills and leaks during construction. The plan describes spill prevention practices, emergency response procedures, emergency and personnel protection equipment, release notification procedures, and cleanup procedures. A draft version of the SPCC is provided as Appendix C of the EIS.

Mitigation and other measures contained in the Environmental Report would apply to the basic design and construction specifications applicable to lands disturbed by the Project. This approach would enable construction to proceed with a single set of specifications, irrespective of the ownership status (federal versus non-federal) of the land being crossed. On private lands, these requirements may be modified slightly to accommodate specific landowner requests or preferences or state-specific conditions.

2.1.11.1 General Pipeline Construction Procedures

Before starting construction at a specific site, engineering surveys of the ROW centerline and additional TWAs would be finalized and the acquisition of ROW easements and any necessary acquisitions of property in fee would be completed.

Pipeline construction generally proceeds as a moving assembly line as shown in **Figure 2.1-13** and summarized below. Keystone currently plans to construct the pipeline in 17 spreads. Standard pipeline construction is composed of specific activities, including survey and staking of the ROW, clearing and grading, pipe stringing, bending, trenching, welding, lowering in, backfilling, hydrostatic testing, and cleanup. In addition to standard pipeline construction methods, special construction techniques would be used where warranted by site-specific conditions. These special techniques would be used when constructing across rugged terrain, waterbodies, wetlands, paved roads, highways, and railroads (Section 2.1.11.2).

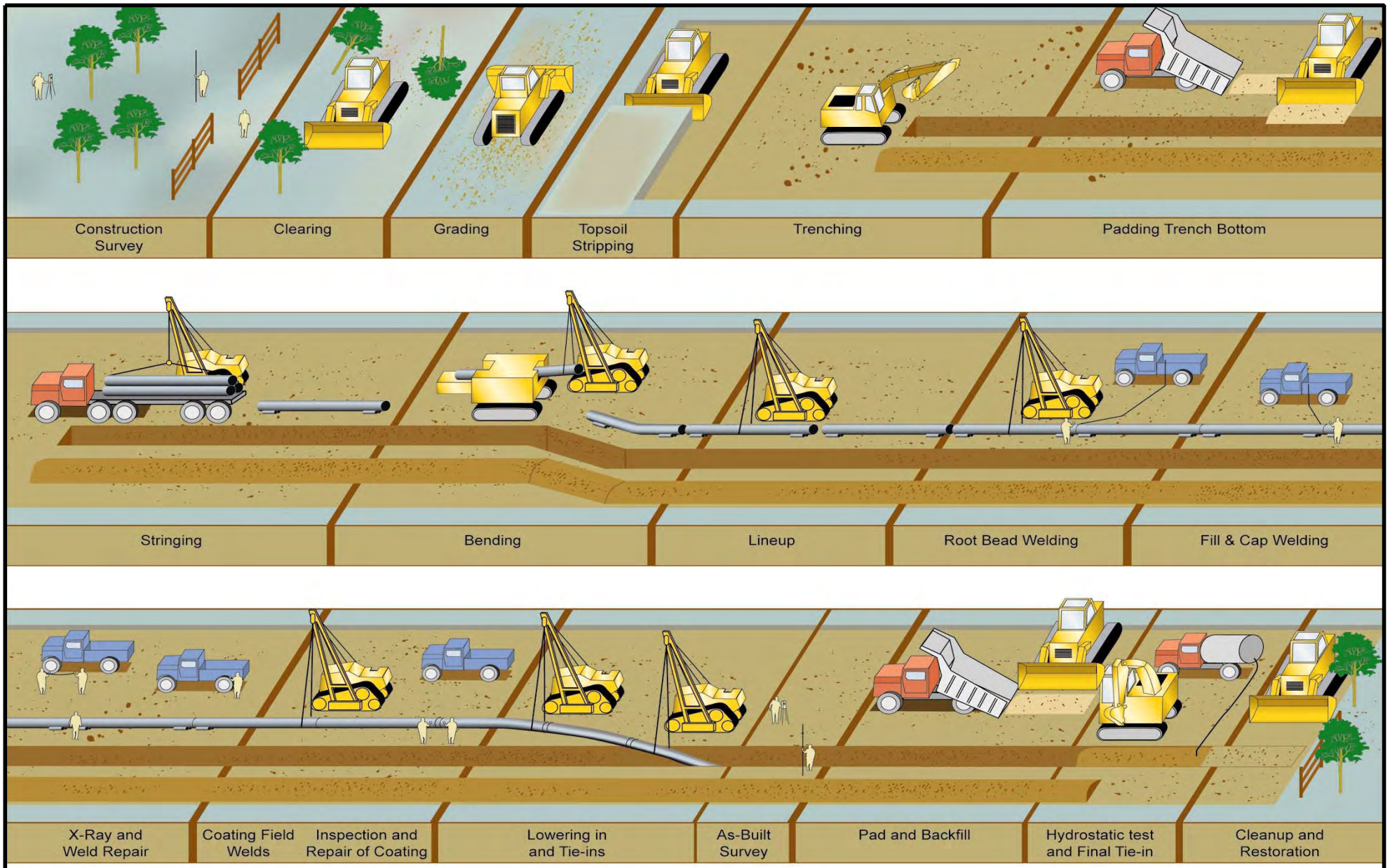

Typical Pipeline Construction Sequence
Figure 2.1-13

Normal construction activities would be conducted during daylight hours, with the following exceptions.

- Completion of critical tie-ins on the ROW would likely occur after daylight hours. Completion requires tie-in welds, non destructive testing, and sufficient backfill to stabilize the ditch.
- HDD operations may be conducted after daylight hours, if determined by the contractor to be necessary to complete a certain location. In some cases, that work may be required continuously until the work is completed; this may last one or more 24-hour days. Such operations may include drilling and pull-back operation, depending upon the site and weather conditions, permit requirements, schedule, crew availability, and other factors.
- While not anticipated in typical operations, certain work may be required after the end of daylight hours due to weather conditions, for safety, or for other project requirements.

Survey and Staking

Before construction begins at any given location, the limits of the approved work area (i.e., the construction ROW boundaries and any additional TWAs) would be marked and the location of approved access roads and existing utility lines would be flagged. Landowner fences would be braced and cut and temporary gates and fences would be installed to contain livestock, if present. Wetland boundaries and other environmentally sensitive areas also would be marked or fenced for protection at this time. Before the pipeline trench is excavated, a survey crew would stake the centerline of the proposed trench and any buried utilities along the ROW.

Clearing and Grading

A clearing crew would follow the fencing crew and would clear the work area of vegetation (including crops) and obstacles (e.g., trees, logs, brush, rocks). Temporary erosion control measures such as silt fence or straw bales would be installed prior to vegetation removal along slopes leading to wetlands and riparian areas. Grading would be conducted where necessary to provide a reasonably level work surface. Where the ground is relatively flat and does not require grading, rootstock would be left in the ground. More extensive grading would be required in steep side slopes or vertical areas and where necessary to prevent excessive bending of the pipe.

Trenching

The trench would be excavated to a depth that provides sufficient cover over the pipeline after backfilling. Typically, the trench would be seven to eight feet deep and four to five feet wide in stable soils. In most areas, the USDOT requires a minimum of 30 inches of cover and as little as 18 inches in rocky areas. To reduce the risk of third party damage Keystone proposes to exceed the federal depth of cover requirements in most areas. In all areas, except areas of consolidated rock, the depth-of-cover for the pipeline would be a minimum of 48 inches (**Table 2.1-4**). In areas of consolidated rock, the minimum depth of cover would be 36 inches. Trenching may precede bending and welding or may follow based on several factors including soil characteristics, water table, presence of drain tiles, and weather conditions at the time of construction.

Table 2.1-4 Minimum Pipeline Cover

Location	Normal Excavation (inches)	Rock Excavation (inches)
Most areas	48	36
All waterbodies	60	36
Dry creeks, ditches, drains, washes, gullies, etc.	60	36
Drainage ditches at public roads and railroads	60	48

Generally, the crews on each construction spread are synchronized with the welding crews for efficiency. The amount of open trench is minimized to the extent possible.

When rock or rocky formations are encountered, tractor-mounted mechanical rippers or rock trenchers would be used to fracture the rock prior to excavation. In areas where mechanical equipment can not break up or loosen the bedrock, blasting (use of explosives) would be required (Section 2.1.11.2). After the pipeline is padded, excavated rock would be used to backfill the trench to the top of the existing bedrock profile.

In agricultural land, rocks that are exposed on the surface due to construction activity would be removed from the ROW prior to and after topsoil replacement to an equivalent quantity, size, and distribution of rocks as that on adjacent, undisturbed lands. Clearing of rocks may be carried out with a mechanical rock picker or by manual means, provided that preservation of topsoil is assured. Rock removed from the ROW would be hauled off the landowner's premises or disposed of on the landowner's premises at a location that is mutually acceptable to the landowner and to Keystone.

Topsoil segregation would be based on site-specific circumstances and one of the following mitigating measures would be implemented. Topsoil would be separated from subsoil only over the trench, over the trench and spoil side, or over the full width of ROW. Keystone may also conduct full ROW topsoil stripping in other areas where it is beneficial from a construction stand-point, or where required by landowners or land managers. When soil is removed from only the trench, topsoil would be piled on the near side of the trench and subsoil on the far side of the trench. This would allow for proper restoration of the soil during the backfilling process (see **Figures 2.1-8** through **2.1-10**). When soil is removed from both the trench and the spoil side, topsoil would be stored on the edge of the near side of the construction ROW and the subsoil on the spoil side of the trench. In areas where the ROW would be graded to provide a level working surface and where there is another need to separate topsoil from subsoil, topsoil would be removed from the entire area to be graded and stored separately from the subsoil.

Topsoil would be piled such that the mixing of subsoil and topsoil would not occur. Gaps would be left between the spoil piles to prevent storm water runoff from backing up or flooding.

Pipe Stringing, Bending, and Welding

Prior to or following trenching, sections of externally coated pipe approximately 80 feet long (also referred to as "joints") would be transported by truck over public roads and along authorized private access roads to the ROW and placed or "strung" along the ROW.

After the pipe sections are strung along the trench and before joints are welded together, individual sections of the pipe would be bent to conform to the contours of the trench by a track-mounted, hydraulic pipe-bending machine. For larger bend angles, fabricated bends may be used.

After the pipe sections are bent, the joints would be welded together into long strings and placed on temporary supports. During welding the pipeline joints would be lined up and held in position until securely joined. Keystone proposes to non-destructively inspect 100 percent of the welds using radiographic, ultrasonic, or other USDOT approved method. Welds that do not meet established specifications would be repaired or removed. Once the welds are approved, a protective epoxy coating would be applied to the welded joints. The pipeline would then be electronically inspected or "jeeped" for faults or holidays in the epoxy coating and visually inspected for any faults, scratches, or other coating defects. Damage to the coating would be repaired before the pipeline is lowered into the trench.

In rangeland areas used for grazing, construction activities potentially can hinder the movement of livestock if the livestock cannot be relocated temporarily by the owner. Construction activities may also hinder the movement of wildlife. To minimize the impact on livestock and wildlife movements during construction, Keystone would leave hard plugs (short lengths of unexcavated trench) or install soft plugs (areas where the trench is excavated and replaced with minimal compaction) to allow livestock and wildlife to cross the trench

safely. Soft plugs would be constructed with a ramp on each side to provide an avenue of escape for animals that may fall into the trench.

Lowering In and Backfilling

Before the pipeline is lowered into the trench, the trench would be inspected to be sure it is free of livestock or wildlife, as well as rock and other debris that could damage the pipe or its protective coating. In areas where water has accumulated, dewatering may be necessary to permit inspection of the bottom of the trench. The pipeline then would be lowered into the trench. On sloped terrain, trench breakers (e.g., stacked sand bags or foam) would be installed in the trench at specified intervals to prevent subsurface water movement along the pipeline. The trench would then be backfilled using the excavated material. In rocky areas, the pipeline would be protected with an abrasion-resistant coating or rock shield (fabric or screen that is wrapped around the pipe to protect the pipe and its coating from damage by rocks, stones, and roots). Alternatively, the trench bottom would be filled with padding material (e.g., sand, soil, or gravel) to protect the pipeline. An estimated 85,000 cubic yards of padding material would be required. No topsoil would be used as padding material. Topsoil would be returned to its original horizon after subsoil is backfilled in the trench.

Hydrostatic Testing

The pipeline would be hydrostatically tested in sections of approximately 30 miles (with a maximum 50 miles) to ensure the system is capable of withstanding the operating pressure for which it is designed. This process involves isolating the pipe segment with test manifolds, filling the segment with water, pressurizing the segment to a pressure a minimum of 1.25 times the maximum operating pressure (MOP) at the high point elevation of each test section, and maintaining that pressure for a period of 8 hours. Fabricated assemblies may be tested prior to installation in the trench for a period of 4 hours. The hydrostatic test would be conducted in accordance with 49 CFR 195.

Water for hydrostatic testing would generally be obtained from rivers and streams crossed by the pipeline and in accordance with federal, state, and local regulations. Intakes would be screened to prevent entrainment of fish and intake and discharge locations would be determined with construction contractors but a preliminary list is found in the CMRP. Generally the pipeline would be hydrostatically tested after backfilling and all construction work that would directly affect the pipe is complete. If leaks are found, they would be repaired and the section of pipe retested until specifications are met. There are no chemicals added to the test water. The water is generally the same quality as the source water since there are no additives to the water. Water used for the testing would then be returned to the source or transferred to another pipe segment for subsequent hydrostatic testing and then returned to the source. After hydrotesting, the water would be tested to ensure compliance with the National Pollutant Discharge Elimination System discharge permit requirements, treated if necessary, and discharged. Hydrostatic testing is discussed further in Section 4.2.4.1 of the Environmental Report and in the CMRP (**Appendix A**).

Pipe Geometry Inspection

The pipeline would be inspected prior to final tie-ins utilizing an electronic caliper (geometry) pig to ensure the pipeline does not have any dents, bulging, or ovality that might be detrimental to the operation of the pipeline.

Final Tie-ins

Following successful hydrostatic testing, test manifolds would be removed and the final pipeline tie-in welds would be made and inspected.

Commissioning

After the final tie-ins are complete and inspected, the pipeline would be cleaned and dewatered. Commissioning involves verifying that equipment has been installed properly and is working, that controls and communications systems are functional, and that the pipeline is ready for service. In the final step, the pipeline is prepared for service by filling the line with crude oil.

Cleanup and Restoration

During cleanup, construction debris on the ROW would be disposed of and work areas would be final graded. Preconstruction contours would be restored as closely as possible. Segregated topsoil would be spread over the surface of the ROW and permanent erosion controls would be installed. After backfilling, final cleanup would begin as soon as weather and site conditions permit. Every reasonable effort would be made to complete final cleanup (including final grading and installation of erosion control devices) within approximately 20 days after backfilling the trench (approximately 10 days in residential areas), subject to weather and seasonal constraints. Construction debris would be cleaned up and taken to an appropriate disposal facility.

After permanent erosion control devices are installed and final grading complete, all disturbed work areas except annually cultivated fields would be seeded as soon as possible. Seeding is intended to stabilize the soil, revegetate areas disturbed by construction, and restore native vegetation. Timing of the reseeding efforts would depend upon weather and soil conditions and would be subject to the prescribed rates and seed mixes specified by the landowner, land management agency, or Natural Resources Conservation Service (NRCS) recommendations. On agricultural lands, seeding would be conducted only as agreed upon with the landowner.

Keystone would restrict access to the permanent easement using gates, boulders, or other barriers to minimize unauthorized access by all-terrain vehicles in wooded areas if requested by the landowner. Pipeline markers would be installed at road and railroad crossings and other locations (as required by 49 CFR 195) to show the location of the pipeline. Markers would identify the owner of the pipeline and convey emergency contact information. Special markers providing information and guidance to aerial patrol pilots also would be installed.

2.1.11.2 Non-Standard Construction Procedures

In addition to standard pipeline construction methods, special construction techniques would be used where warranted by site-specific conditions. These special techniques would be used when crossing roads, highways and railroads; steep terrain; unstable soils; waterbodies; wetlands; areas that require blasting; and residential and commercial areas. These special techniques are described below.

Road, Highway, and Railroad Crossings

Construction across paved roads, highways, and railroads would be in accordance with the requirements of the appropriate road and railroad crossing permits and approvals. In general, all major paved roads, all primary gravel roads, highways, and railroads would be crossed by boring beneath the road or railroad. Boring requires the excavation of a pit on each side of the feature, the placement of boring equipment in the pit, and boring a hole under the road at least equal to the diameter of the pipe. Once the hole is bored, a prefabricated pipe section would be pulled through the borehole. For long crossings, sections can be welded onto the pipe string just before being pulled through the borehole. Each boring would be expected to take 1 to 2 days for most roads and railroads and 10 days for long crossings such as interstate or four-lane highways.

Most smaller, unpaved roads and driveways would be crossed using the open-cut method where permitted by local authorities or private owners. Most open-cut road crossings can be finished and the road resurfaced in 1 or 2 days.

Pipeline, Utility, and Other Buried Feature Crossings

Keystone and its pipeline contractors would comply with DOT regulations, utility agreements, and industry best management practices with respect to utility crossing and separation specifications. One-call notification would be made for all utility crossings so respective utilities are identified accordingly.

Unless otherwise specified in a crossing agreement, the contractor would excavate to allow installation of the pipeline across the existing utility with a minimum clearance of 12 inches. The clearance would be

filled with sandbags or suitable fill material to maintain the clearance. Backfill of the crossing would be compacted in lifts to ensure continuous support of the existing utility.

For some crossings, the owner of the utility may require the facility to be excavated and exposed by their own employees prior to the Keystone contractor getting to the location. In those cases, Keystone would work with owners to complete work to the satisfaction of the owner.

Where the owner of the utility does not require pre-excavation, generally, the pipeline contractor would locate and expose the utility before conducting machine excavation.

Steep Terrain

Additional grading may be required in areas where the proposed pipeline route would cross steep slopes. Steep slopes often need to be graded down to a gentler slope for safe operation of construction equipment and to accommodate pipe-bending limitations. In such areas, the slopes would be excavated prior to pipeline installation and reconstructed to a stable condition.

In areas where the pipeline route crosses laterally along the side of a slope, cut and fill grading may be required to obtain a safe, flat work terrace. Topsoil would be stripped from the entire ROW and stockpiled prior to cut and fill grading on steep terrain. Generally on steep slopes, soil from the high side of the ROW would be excavated and moved to the low side of the ROW to create a safe and level work terrace. After the pipeline is installed, the soil from the low side of the ROW would be returned to the high side and the slope's contour would be restored as near as practicable to preconstruction condition. Topsoil from the stockpile would be spread over the surface, erosion control features installed, and seeding implemented.

In steep terrain, temporary sediment barriers such as silt fence and straw bales would be installed during clearing to prevent the movement of disturbed soil into wetland, waterbody, or other environmentally sensitive areas. Temporary slope breakers consisting of mounded and compacted soil would be installed across the ROW during grading and permanent slope breakers would be installed during cleanup. Following construction, seed would be applied to steep slopes and the ROW would be mulched with hay or non-brittle straw or covered with erosion control fabric. Sediment barriers would be maintained across the ROW until permanent vegetation is established. Additional temporary workspace may be required for storage of graded material and/or topsoil during construction.

Unstable Soils

Construction in unstable soils, such as those within the sand hills region of South Dakota and Nebraska, would be in accordance with measures outlined in the CMRP (**Appendix A**). Construction in these areas could require extended TWAs; potential disturbance associated with these areas would be included in supplemental filings when these areas are identified. Special construction and mitigation techniques would be applied to areas with high potential for landslides, erosion-prone locations, and blowouts. To facilitate reclamation, Keystone could implement measures such as the use of photodegradable mats and livestock controls.

Waterbody Crossings - Perennial

Approximately 341 perennial waterbodies would be crossed one or more times during the construction of the Project. Perennial waterbodies would be crossed using one of four techniques: the open-cut wet method (the preferred method), dry flume method, dry dam-and-pump method, or HDD. Each method is described below.

The preferred crossing method would be to use the open-cut crossing method. The open-cut method involves trenching through the waterbody while water continues to flow through the construction work area. Pipe segments for the crossing would be fabricated adjacent to the waterbody. Generally, backhoes operating from one or both banks would excavate the trench within the streambed. In wider rivers, in-stream operation of equipment may be necessary. Hard or soft trench plugs would be placed to prevent the flow of water into the upland portions of the trench. Trench spoil excavated from the streambed generally would be placed at least 10 feet away from the water's edge unless stream width is great enough to require placement in the stream

bed. Sediment barriers would be installed where necessary to control sediment and to prevent excavated spoil from entering the water. After the trench is dug, the prefabricated pipeline segment would be carried, pushed, or pulled across the waterbody and positioned in the trench. When crossing saturated wetlands with flowing waterbodies using the open-cut method, the pipe coating would be covered with reinforced concrete or concrete weights to provide negative buoyancy. The need for weighted pipe would be determined by detailed design and site conditions at the time of construction. The trench would then be backfilled with native material or with imported material if required by applicable permits. Following backfilling, the banks would be restored and stabilized.

The Project would utilize dry flume or dry dam-and-pump methods where technically feasible on environmentally sensitive waterbodies as warranted by resource-specific sensitivities. The flume crossing method involves diverting the flow of water across the trenching area through one or more flume pipes placed in the waterbody. The dam-and-pump method is similar to the flume method except that pumps and hoses would be used instead of flumes to move water around the construction work area. In both methods, trenching, pipe installation, and backfilling are done while water flow is maintained for all but a short reach of the waterbody at the actual crossing. Once backfilling is completed, the stream banks restored and stabilized and the flume or pump hoses are removed.

Keystone plans to use the HDD method of construction for 38 waterbody crossings (**Table 2.1-5**) on the Project. The HDD method involves drilling a pilot hole under the waterbody and banks, then enlarging the hole through successive reamings until the hole is large enough to accommodate a prefabricated segment of pipe. Throughout the process of drilling and enlarging the hole, slurry consisting mainly of water and bentonite clay would be circulated to power and lubricate the drilling tools, remove drill cuttings, and provide stability to the drilled holes. Pipe sections long enough to span the entire crossing would be staged and welded along the

Table 2.1-5 Waterbodies Crossed Using the Horizontal Directional Drilling Method

Waterbody	Number of Crossings	Approximate Milepost(s)
Steele City Segment		
Milk River	1	82.7
Missouri River	1	89.0
Yellowstone River	1	196.0
Little Missouri River	1	292.1
Cheyenne River	1	425.9
White River	1	536.9
Keya Paha River	1	599.8
Niobrara River	1	615.3
Cedar River	1	696.5
Loup River	1	739.8
Platte River	1	755.4
Gulf Coast Segment		
Deep Fork	1	22.13
North Canadian River	1	38.7
Little River	1	70.5

Table 2.1-5 Waterbodies Crossed Using the Horizontal Directional Drilling Method

Waterbody	Number of Crossings	Approximate Milepost(s)
[South] Canadian River	1	74.2
Clear Boggy Creek	1	126.7
Red River	1	155.3
Bois D'Arc Creek	1	161.0
North Sulphur River	1	190.2
South Sulphur River	1	201.2
White Oak Creek	1	212.3
Big Cyprus Creek	1	227.6
Small Lake	1	254.1
Big Sandy Creek	1	256.1
Sabine River	1	262.7
East Fork of Angelina River	1	312.3
Angelina River	1	333.3
Neches River	1	367.3
Menard Creek	1	413.8
Neches Valley Canal Authority	1	459.7
Lower Neches Valley Canal Authority	1	459.9
Willow Marsh Bayou	1	457.0
Hillebrandt Bayou	1	470.9
Port Arthur Canal and Entergy Corridor	1	478.2
Houston Lateral		
Trinity Creek Marsh	1	17.7
Trinity River	1	22.8
Cedar Bayou	1	35.6
San Jacinto River	1	43.3

construction work area on the opposite side of the waterbody and then pulled through the drilled hole. Ideally, use of the HDD method results in no impact on the banks, bed, or water quality of the waterbody being crossed.

Waterbodies considered for directional drill include commercially navigable waterbodies, waterbodies wider than 100 feet, waterbodies with terrain features that prohibit open crossing methods, waterbodies adjacent to features such as roads, railroads that would complicate construction by an open crossing method, and sensitive environmental resource areas that could be avoided by HDD.

Approximately 621 intermittent waterbodies would be crossed by the Project. In the event these intermittent waterbodies are dry or have non-moving water at the time of crossing, Keystone proposes to use conventional upland cross-country construction techniques. If an intermittent waterbody is flowing when crossed, Keystone would install the pipeline using the open-cut wet crossing method discussed previously. When crossing waterbodies, Keystone would adhere to the guidelines outlined in Keystone's CMRP (**Appendix A**) and the requirements of its waterbody crossing permits.

Additional TWAs would be required on both sides of all waterbodies to stage construction, fabricate the pipeline, and store materials. These workspaces would be located at least 10 feet away from the water's edge, except where the adjacent upland consists of actively cultivated or rotated cropland or other disturbed land. Before construction, temporary bridges (e.g., subsoil fill over culverts, timber mats supported by flumes, railcar flatbeds, flexi-float apparatus) would be installed across all perennial waterbodies to allow construction equipment to cross. Construction equipment would be required to use the bridges, except the clearing crew, which would be allowed one pass through the waterbodies before the bridges are installed.

During clearing, sediment barriers such as silt fence and staked straw bales would be installed and maintained on drainages across the ROW adjacent to waterbodies and within additional TWAs to minimize the potential for sediment runoff. Silt fence and straw bales located across the working side of the ROW would be removed during the day when vehicle traffic is present and would be replaced each night. Alternatively, drivable berms could be installed and maintained across the ROW in lieu of a silt fence or straw bales.

In general, equipment refueling and lubricating at waterbodies would take place in upland areas that are 100 feet or more from the water. When circumstances dictate that equipment refueling and lubricating would be necessary in or near waterbodies, Keystone would follow its SPCC Plan to address the handling of fuel and other hazardous materials.

After the pipeline is installed beneath the waterbody, restoration would begin. Waterbody banks would be restored to preconstruction contours or to a stable configuration. Appropriate erosion control measures such as rock riprap, gabion baskets (rock enclosed in wire bins), log walls, vegetated geogrids, or willow cuttings would be installed as necessary on steep banks in accordance with permit requirements. More stable banks would be seeded with native grasses and mulched or covered with erosion control fabric. Waterbody banks would be temporarily stabilized within 24 hours of completing in-stream construction. Sediment barriers, such as silt fences, straw bales or drivable berms would be maintained across the ROW at all waterbody approaches until permanent vegetation is established. Temporary equipment bridges would be removed following construction.

Wetland Crossings

Data from wetland delineation field surveys, aerial photography, and National Wetland Inventory mapping were used to identify wetlands crossed by the proposed pipeline. Pipeline construction across wetlands would be similar to typical conventional upland cross-country construction procedures, with several modifications where necessary to reduce the potential for pipeline construction to affect wetland hydrology and soil structure.

The wetland crossing method used would depend largely on the stability of the soils at the time of construction. If wetland soils are not excessively saturated at the time of construction and can support construction equipment without equipment mats, construction would occur in a manner similar to conventional upland cross-country construction techniques. Topsoil would be segregated over the trench line. In most saturated soils, topsoil segregation would not be possible. Additional TWAs would be required on both sides of particularly wide saturated wetlands to stage construction, fabricate the pipeline, and store materials. These additional TWAs would be located in upland areas a minimum of 10 feet from the wetland edge. More information is located in the Site-Specific Waterbody Crossing Plans located in the Environmental Report.

Construction equipment working in saturated wetlands would be limited to that area essential for clearing the ROW, excavating the trench, fabricating and installing the pipeline, backfilling the trench, and restoring the ROW. In areas where there is no reasonable access to the ROW except through wetlands, non-essential

equipment would be allowed to travel through wetlands only if the ground is firm enough or has been stabilized to avoid rutting.

Clearing of vegetation in wetlands would be limited to trees and shrubs, which would be cut flush with the surface of the ground and removed from the wetland. To avoid excessive disruption of wetland soils and the native seed and rootstock within the wetland soils, stump removal, grading, topsoil segregation, and excavation would be limited to the area immediately over the trench line. During clearing, sediment barriers, such as silt fence and staked straw bales, would be installed and maintained on down slopes adjacent to saturated wetlands and within additional TWAs as necessary to minimize the potential for sediment runoff.

Where wetland soils are saturated or inundated, the pipeline can be installed using the push-pull technique. The push-pull technique involves stringing and welding the pipeline outside of the wetland and excavating and backfilling the trench using a backhoe supported by equipment mats or timber riprap. The prefabricated pipeline is installed in the wetland by equipping it with floats and pushing or pulling it across the water-filled trench. After the pipeline is floated into place, the floats are removed and the pipeline sinks into place. Most pipe installed in saturated wetlands would be coated with concrete or installed with set-on weights to provide negative buoyancy. Final locations requiring weighted pipe for negative buoyancy would be determined by detailed design and site conditions at the time of construction. Because little or no grading would occur in wetlands, restoration of contours would be accomplished during backfilling. Prior to backfilling, trench breakers would be installed where necessary to prevent the subsurface drainage of water from wetlands. Where topsoil has been segregated from subsoil, the subsoil would be backfilled first followed by the topsoil. Topsoil would be replaced to the original ground level leaving no crown over the trench line. In some areas where wetlands overlie rocky soil, the pipe would be padded with rock-free soil or sand before backfilling with native bedrock and soil. Equipment mats, timber riprap, gravel fill, geotextile fabric, and straw mats would be removed from wetlands following backfilling except in the travel lane to allow continued, but controlled, access through the wetland until the completion of construction. Upon the completion of construction, these materials would be removed.

Where wetlands are located at the base of slopes, permanent slope breakers would be constructed across the ROW in upland areas adjacent to the wetland boundary. Temporary sediment barriers would be installed where necessary until revegetation of adjacent upland areas is successful. Once revegetation is successful, sediment barriers would be removed from the ROW and disposed of properly.

In wetlands where no standing water is present, the construction ROW would be seeded in accordance with the recommendations of the local soil conservation authorities or land management agency.

Blasting

Blasting may be required in areas where consolidated shallow bedrock or boulders cannot be removed by conventional excavation methods. Blasting is likely to be required where the bedrock type expected to be present within 84 inches (7 feet) of the surface is lithic or very strongly cemented rock. Ripping is likely to be required where the bedrock type expected to be present within 84 inches (7 feet) of the surface is dense material, paralithic bedrock, abrupt textural change, natric or strongly contrasting textural stratification.

If blasting is required to clear the ROW and to fracture rock within the ditch, strict safety precautions would be followed. Extreme care would be exercised to avoid damage to underground structures, cables, conduits, pipelines, and underground watercourses or springs. To protect property and livestock, adequate notice would be provided to adjacent landowners or tenants in advance of blasting. Blasting activity would be performed during daylight hours and in compliance with federal, state, and local codes and ordinances and manufacturers' prescribed safety procedures and industry practices.

Fences and Grazing

Fences would be crossed or paralleled by the construction ROW. Before cutting any fence for pipeline construction, each fence would be braced and secured to prevent the slacking of the fence. To prevent the

passage of livestock the opening in the fence would be closed temporarily when construction crews leave the area. If gaps in natural barriers used for livestock control are created by pipeline construction, the gaps would be fenced according to the landowner's requirements. All existing improvements, such as fences, gates, irrigation ditches, cattle guards, and reservoirs would be maintained during construction and repaired to preconstruction conditions or better upon completion of construction activities.

2.1.11.3 Aboveground Facility Construction Procedures

Construction activities at each of the new pump stations would follow a standard sequence of activities: clearing and grading, installing foundations for the electrical building and support buildings, and erecting the structures to support the pumps and/or associated facilities. A block valve is installed in the mainline with two side block valves; one to the suction piping of the pumps and one from the discharge piping of the pumps. Construction activities and the storage of building materials would be confined to the pump station construction sites. **Figures 2.1-11** and **2.1-12** illustrate typical plot plans for pump stations.

The sites for the pump stations would be cleared of vegetation and graded as necessary to create a level surface for the movement of construction vehicles and to prepare the area for the building foundations. Foundations would be constructed for the pumps and buildings and soil would be stripped from the construction footprint.

Each pump station would include one electrical building and one support building. The electrical building would include electrical systems, communication, and control equipment. The second building houses a small office. The crude oil piping, both aboveground and below ground, would be installed and pressure tested using methods similar to those used for the main pipeline. After testing is successfully completed, the piping would be tied into the main pipeline. Piping installed below grade would be coated for corrosion protection prior to backfilling. In addition, all below grade facilities would be protected by a cathodic protection system. Before being put into service, pumps, controls, and safety devices would be checked and tested to ensure proper system operation and activation of safety mechanisms.

The site for the tank farm would be co-located with Pump Station 26 at Steele City, Nebraska. The tank farm site would be cleared and graded to create a level work surface for the tanks. Topsoil from the site would be stored adjacent to the site area. The welded steel tank structures with internal floating roofs would be installed inside an impervious bermed area, which would act as secondary containment. The piping in the tank farm area would be both above and below ground. The tanks and associated piping would be isolated electrically from the pipeline and protected by their own cathodic protection system. The electrical and control system for the tanks and associated piping would share the facilities required for the adjacent pump station. After successful hydrostatic testing of the tanks and associated piping and commissioning of the control system, the tanks would be connected with the pipeline system. Each tank would have a separate water screen and fire suppression system supplied by a fire water supply pond located on the site. In addition to this pond, a separate larger pond would be installed to manage storm water and mitigate any potential contamination from the site.

Each pump station and the tank farm would require electricity, which would be obtained from local utilities. **Table 2.1-6** summarizes new power and distribution line requirements.

After the completion of startup and testing, the pump station sites and the tank farm would be final graded. A permanent security fence would be installed around each pump station site and the tank farm.

Table 2.1-6 Summary of Power Supply Requirements for Pump Stations and Tank Farm

Pump Station No.	Milepost (0 at US border)	Transformer Size (MVa)[1]	Utility Supply (kV)[2]	Estimated Power Line Lengths (miles)	Power Provider
Steele City Segment					

Table 2.1-6 Summary of Power Supply Requirements for Pump Stations and Tank Farm

Pump Station No.	Milepost (0 at US border)	Transformer Size (MVa)[1]	Utility Supply (kV)[2]	Estimated Power Line Lengths (miles)	Power Provider
Montana					
PS-09	1.1	20/27/33	115	62.4	Big Flat Electric Cooperative
PS-10A-1	49.3	20/27/33	115	51.0	Valley Electric Cooperative
PS-11	98.0	20/27/33	115	12.0	McCone Electric Cooperative or Nowak Electric Cooperative
PS-12	148.6	20/27/33	115	3.3	McCone Electric Cooperative
PS-13A-2	199.3	20/27/33	115	13.5	Tongue River Electric Cooperative
PS-14A-1	236.8	20/27/33	115	5.2	Montana-Dakota Utilities Company
South Dakota					
PS-15A-2	285.6	20/27/33	115	23.0	Grand Electric Cooperative
PS-16	333.3	20/27/33	115	45.7	Grand Electric Cooperative
PS-17A-2	386.9	20/27/33	115	11.0	Grand Electric Cooperative
PS-18	440.0	20/27/33	115	25.9	West Central Electric Cooperative
PS-19A-3	495.8	20/27/33	115	20.2	West Central Electric Cooperative
PS-20A-2	546.4	20/27/33	115	15.9	Rosebud Electric Cooperative
Nebraska					
PS-21A-1	591.7	20/27/33	115	20.1	Nebraska Public Power District
PS-22	642.1	20/27/33	115	7.4	Nebraska Public Power District
PS-23	694.0	20/27/33	115	23.0	Nebraska Public Power District
PS-24A-1	751.1	20/27/33	115	10.1	Nebraska Public Power District
PS-25A-1	799.7	20/27/33	69	14.3	Nebraska Public Power District
PS-26	850.6	20/27/33	115	13.3	Nebraska Public Power District
Keystone Cushing Extension					
Kansas					
PS-27A-1	49.0	20/27/33	115	10.2	Westar Energy
PS-29A-2	144.5	20/27/33	138	8.3	Westar Energy
Gulf Coast Segment					
Oklahoma					
PS-32A-1	0.0	17/22/28	138	6.9	Oklahoma Gas and Electric Company
PS-33A-4	49.2	20/27/33	138	0.6	Canadian Valley Electric Cooperative/ PSO
PS-34A-1	95.4	20/27/33	138	5.3	People's Electric Cooperative/PSO

Table 2.1-6 Summary of Power Supply Requirements for Pump Stations and Tank Farm

Pump Station No.	Milepost (0 at US border)	Transformer Size (MVa)[1]	Utility Supply (kV)[2]	Estimated Power Line Lengths (miles)	Power Provider
PS-35A-1	147.a	20/27/33	138	4.1	Southeastern Electric Cooperative
Texas					
PS-36A-3	194.0	20/27/33	138	7.3	Lamar Electric Cooperative
PS-37A-2	238.0	20/27/33	138	0.1	Wood County Electric Cooperative
PS-38A-3	284.0	20/27/33	138	0.2	Cherokee County Electric Cooperative
PS-39A-1	333.5	20/27/33	138	5.2	Cherokee County Electric Cooperative
PS-40A-4	378.1	20/27/33	138	0.3	Sam Houston Electric Cooperative
PS-41A-1	432.7	20/27/33	240	0.4	Sam Houston Electric Cooperative

[1] MVa – Mega Volt amperes.

[2] kV – kilovolt.

Note: Mileposting for each segment of the Project start at 0.0 at the northernmost point of each segment and increase in the direction of oil flow.

Where delivery and pigging facilities are co-located with a pump station or the tank farm, the delivery and pigging facilities would be located entirely within the facility. Construction activities would include clearing, grading, trenching, installing piping, erecting buildings, fencing the facilities, cleaning up, and restoring the area. The delivery facilities would operate on locally provided power (**Table 2.1-6**).

Intermediate MLV construction would be carried out concurrently with the construction of the pipeline. Wherever practical, intermediate MLVs would be located near public roads to allow year-round access. If necessary, permanent access roads or approaches would be constructed to each fenced MLV site.

Construction Workforce and Schedule

Workforce

Keystone proposes to begin construction of the Gulf Coast Segment in 2010 and the Steele City Segment in 2011, and the Houston Lateral in 2012. The Project is planned to be placed into service in phases. The Gulf Coast Segment and Houston Lateral are planned to be in-service in 2012 and the Steele City Segment is planned to be in service in 2012. Construction of new pump stations along the Keystone Cushing Extension would coincide with construction of the Project. Keystone anticipates a peak work force of approximately 5,000 to 6,000 construction personnel. Construction personnel would consist of Keystone employees, contractor employees, construction inspection staff, and environmental inspection staff.

Keystone is planning to build the Project in 17 construction spreads. The spread breakdowns and corresponding base of operations for construction spreads are shown in **Table 2.1-7**. Construction activity would occur simultaneously on spreads within each phased segment of the Project.

Table 2.1-7 Construction Spreads Associated with the Project

Spread Number	Location	Approximate Length of Construction Spread (miles)	Base(s) for Construction[1]
Steele City Segment			

Spread 1	MP 0 to 81	81	Hinsdale, Montana, and Glasgow, Montana
Spread 2	MP 81 to 163	82	Glasgow, Montana, and Circle, Montana
Spread 3	MP 163 to 247	84	Glendive, Montana, and Baker, Montana
Spread 4	MP 247to 333	86	Buffalo, South Dakota
Spread 5	MP 333 to 415	82	Faith, South Dakota, and Union Center, South Dakota
Spread 6	MP 415 to 500	85	Phillip, South Dakota
Spread 7	MP 500 to 580	80	Murdo, South Dakota, and Winner, South Dakota
Spread 8	MP 580 to 664	84	Fairfax, Nebraska, Stuart, Nebraska, and O'Neill, Nebraska
Spread 9	MP 664 to 758	94	Greeley, Nebraska, and Central City, Nebraska
Spread 10	MP 758 to 851	93	York, Nebraska, Beatrice, Nebraska, and Fairbury, Nebraska
Gulf Coast Segment			
Spread 1	MP 0 to 95	95	Holdenville, Oklahoma
Spread 2	MP 95 to 185	90	Paris, Texas
Spread 3	MP 185 to 284	99	Pleasant, Texas
Spread 4	MP 284 to 366	82	Henderson, Texas, Nacogdoches, Texas, Crochett, Texas
Spread 5	MP 366 to 433	67	Lufkin, Texas
Spread 6	MP 433 to 480	47	Sour Lake, Texas
Houston Lateral			
Spread 7	MP 0 to 49	49	Sour Lake, Texas, Liberty, Texas, Dayton, Texas

[1] Base(s) of construction for Spreads 1-8 may use construction camps. Camps would be situated in the area between spread breaks for Spreads 1 and 2, for Spreads 3 and 4, for Spreads 5 and 6, and for Spreads 7 and 8.

Note: Mileposting for each segment of the Project is started at 0 at the northernmost point of the segment, and increases in the direction of oil flow.

It is anticipated that 500 to 600 construction and inspection personnel would be required, associated with each spread, except for the Houston Lateral, which would require approximately 250 workers. Each spread would require 6 to 8 months to complete. Construction of new pump stations would require 20 to 30 additional workers at each site. Construction of all pump stations would be completed in 18 to 24 months.

Keystone, through its construction contractors and subcontractors, would attempt to hire temporary construction staff from the local population. Provided qualified personnel are available, approximately 10 to

15 percent (50 to 100 people per spread) may be hired from the local work force for each spread. This may not be possible in more rural areas.

Schedule

As an industry rule-of-thumb, cross-country construction progresses at a rate of approximately 20 completed miles per calendar month per spread, which could be used for scheduling purposes. Based on experience, the construction schedule may be estimated as follows:

- 3 weeks (21 calendar days) of work on the ROW prior to the start of production welding. These activities include clearing, grading, stringing, and ditching.
- Production welding, based on an average of 1.25 miles per working day and a 6-day work week (7 calendar days), would be completed at 7.5 miles per week, on average.
- 7 weeks (49 calendar days) of work after completion of production welding. These activities include non-destructive testing, field joint coating, lowering-in, tie-ins, backfill, ROW clean-up, hydrostatic testing, reseeding, and other ROW reclamation work.

Using this as a basis for determining the duration of construction activities on the ROW yields the time requirements shown below for various spread lengths (**Table 2.1-8**). Construction in areas with greater congestion, higher population, industrial areas, or areas requiring other special construction procedures, may result in a slower rate of progress.

Table 2.1-7 Resulting Cross-Country Construction Times Based on Estimates of Schedule

Spread Length	Pre-welding	Welding Time	Post-welding and Clean-up	Duration
80 miles	21 days	75 days	49 days	145 days (21 weeks)
90 miles	21 days	84 days	49 days	154 days (22 weeks)
100 miles	21 days	94 days	49 days	164 days (24 weeks)
120 miles	21 days	112 days	49 days	182 days (26 weeks)

In addition, about 1 month for contractor mobilization before the work is started and 1 month after the work is finished for contractor demobilization should be factored into the overall construction schedule.

2.1.11.4 Future Plans and Abandonment

The Project is expected to operate for approximately 50 years. No plans for abandonment of these facilities have been identified at this time. If abandonment of any facility is proposed in the future, abandonment would be implemented in accordance with then-applicable federal and state permits, approvals, codes, and regulations.

2.1.12 Operation and Maintenance

The Project's facilities would be maintained in accordance with 49 CFR 194 and 195 and other applicable federal and state regulations. Operation and maintenance of the pipeline system in most cases would be accomplished by Keystone personnel. It is estimated that the permanent operational pipeline workforce would comprise about 20 U.S. employees.

An annual Pipeline Maintenance Program (PMP) would be implemented by Keystone to ensure the integrity of the pipeline. The PMP would include valve maintenance, periodic inline inspections, and cathodic protection readings underpinned by a company-wide goal to ensure facilities are reliable and in service. Data collected in

each year of the program would be fed back into the decision-making process for the development of the following year's program. In addition, the pipeline would be monitored 24 hours a day, 365 days a year from the oil control center using leak detection systems and supervisory control and data acquisition. During operations, Keystone would have a Project-specific Emergency Response Plan (ERP) in place to manage a variety of events.

2.1.12.1 Normal Operations and Routine Maintenance

The pipeline would be inspected periodically via aerial and ground surveillance as operating conditions permit, at a frequency consistent with 49 CFR 195. These surveillance activities would provide information on possible encroachments and nearby construction activities, erosion, exposed pipe, and other potential concerns that may affect the safety and operation of the pipeline. Evidence of population changes would be monitored and High Consequence Areas identified as necessary. Intermediate MLVs and MLVs would be inspected twice annually and the results documented.

In order to maintain accessibility of the permanent easement and to accommodate pipeline integrity surveys, woody vegetation along the pipeline permanent easement would be periodically cleared. Cultivated crops would be allowed to grow in the permanent easement. Trees would be removed from the permanent easement. Keystone would use mechanical mowing or cutting along its permanent easement for normal vegetation maintenance. Trees along the paths of areas where the pipe was installed via HDDs would only be cleared as required on a site specific basis.

The ROW would be monitored to identify any areas where soil productivity has been degraded as a result of pipeline construction and reclamation measures would be implemented to rectify any such concerns. Applicable reclamation measures are outlined in the CMRP (**Appendix A**).

Multiple overlapping and redundant systems would be implemented, including Quality Assurance program for pipe manufacture and pipe coating, fusion-bonded epoxy coating, cathodic protection, non-destructive testing of 100 percent of the girth welds, hydrostatic testing to 125 percent of the MOP, periodic internal cleaning and high-resolution in-line inspection, depth of cover exceeding federal standards, periodic aerial surveillance, public awareness program, Supervisory Control and Data Acquisition (SCADA) system, and a Operations Control Center (OCC) (with complete redundant backup) providing monitoring of the pipeline every 5 seconds, 24 hours a day, every day of the year.

SCADA facilities would be located at all pump stations remotely operated and delivery facilities. The pipeline SCADA system would allow the control center to perform the following functions:

- Remote reading of automated MLV positions;
- Remote starting and stopping at pump stations;
- Remote reading of tank levels;
- Remote closing and opening of automated MLVs;
- Remote reading of line pressure and temperature at all automated intermediate valve sites, at all pump stations, and at delivery metering facilities; and
- Remote reading of delivery flow and total flow.

The Project would have an OCC manned by an experienced and highly trained crew 24 hours per day every day of the year. A fully redundant backup OCC would be constructed and available as needed.

Real time information communication systems, including backup systems, would provide up-to-date information from the pump stations to the OCC plus the ability to contact field personnel. The OCC would have highly sophisticated pipeline monitoring systems and multiple leak detection systems as discussed in Section 2.1.11.2.

2.1.12.2 Abnormal Operations

The preparation of manuals and procedures for responding to abnormal operations would comply with the Code of Federal Regulations, including 49 CFR Section 195.402. Section 195.402(a) requires a pipeline operator to prepare and follow a manual of written procedures for conducting normal operations and maintenance activities and handling abnormal operations and emergencies. Section 195.402(d) (Abnormal Operation) requires the manual to include procedures to provide safety when operating design limits have been exceeded.

SCADA and Leak Detection

Keystone proposes to utilize a SCADA system to remotely monitor and control the pipeline system. Highlights of Keystone's SCADA system would include:

- Redundant fully functional backup system available for service at all times;
- Automatic features installed as integral components within the SCADA system to ensure operation within prescribed pressure limits;
- Additional automatic features installed at the local pump station level would also be utilized to provide pipeline pressure protection in the event communications with the SCADA host are interrupted; and
- Pipeline is monitored every 5 seconds, 24 hours a day, every day of the year.

Keystone also would have a number of complimentary leak detection methods and systems available within the OCC. These methods and systems are overlapping in nature and progress in leak detection thresholds. The leak detection methods are as follows:

- Remote monitoring performed by the OCC Operator, which consists primarily of monitoring pressure and flow data received from pump stations and valve sites fed back to the OCC by the Keystone SCADA system. Remote monitoring is typically able to detect leaks down to approximately 25 percent to 30 percent of pipeline flow rate.
- Software based volume balance systems that monitor receipt and delivery volumes. These systems are typically able to detect leaks down to approximately 5 percent of pipeline flow rate.
- Computational Pipeline Monitoring or model based leak detection systems that break the pipeline system into smaller segments and monitor each of these segments on a mass balance basis. These systems are typically capable of detecting leaks down to a level approximately 1.5 percent to 2 percent of pipeline flow rate.
- Computer based, non real time, accumulated gain/loss volume trending to assist in identifying low rate or seepage releases below the 1.5 to 2 percent by volume detection thresholds.
- Direct observation methods, which include aerial patrols, ground patrols and public and landowner awareness programs that are designed to encourage and facilitate the reporting of suspected leaks and events that may suggest a threat to the integrity of the pipeline.

Emergency Response Procedures

Site-specific Emergency Response Procedures (ERPs) would be prepared for the system, which would be submitted to and approved by the Office of Pipeline Safety (OPS) and Pipeline Hazardous Material Safety Administration (PHMSA) prior to operation. A comprehensive ERP for the first Keystone Pipeline Project has been reviewed has been reviewed and approved by PHMSA. That ERP would be used as the basis for preparation of an ERP specific to the Project, incorporating adjustments to reflect project-specific factors. At that time, Keystone would submit the Keystone XL ERP to PHMSA for approval prior to commencing operations.

The National Response Center (NRC) would be notified immediately in the event of a release of crude oil that: 1) violates water quality standards; 2) creates a sheen on water; or 3) causes a sludge or emulsion to be deposited beneath the surface of the water or upon adjoining shorelines (40 CFR 112). In addition to the NRC, timely notifications would also be made to other agencies, including the appropriate local emergency planning committee, sheriff's department, the appropriate state agency, the US Environmental Protection Agency (USEPA), and affected landowners.

Under the National Contingency Plan, the USEPA is the lead federal response agency for oil spills occurring on land and in inland waters. The USEPA would evaluate the size and nature of a spill, its potential hazards, the resources needed to contain and clean it up, and the ability of the responsible party or local authorities to handle the incident. The USEPA would monitor all activities to ensure that the spill is being contained and cleaned up appropriately. All spills meeting legally defined criteria (see criteria above per 40 CFR 112) must be monitored by the USEPA, even though most spills are small and cleaned up by the responsible party. In the unlikely event of a large spill, Keystone and its contractors would be responsible for recovery and cleanup. The usual role of local emergency responders is to notify community members, direct people away from the hazard area, and address potential impacts to the community such as temporary road closings.

A fire associated with a spill is relatively rare. According to historical data (PHMSA 2008), only about 4 percent of reportable liquid spills are ignited. In the event of a fire, local emergency responders would execute the roles listed above and firefighters would take actions to prevent the crude oil fire from spreading to residential areas. Local emergency responders typically are trained and able to execute the roles described above without any additional training or specialized equipment. Keystone also would work with emergency response agencies to provide pipeline awareness education and other support.

Remediation

Corrective remedial actions would be dictated by federal regulations and enforced by the USEPA and OPS and the appropriate state agencies. Required remedial actions may range from the excavation and removal of contaminated soil to allowing the contaminated soil to recover through natural environmental fate processes (e.g., evaporation, biodegradation). Decisions concerning remedial methods and extent of the cleanup would account for state-mandated remedial cleanup levels, potential effects to sensitive receptors, volume and extent of the contamination, potential violation of water quality standards, and the magnitude of adverse impacts caused by remedial activities.

In the event of a spill, several federal regulations define the notification requirements and response actions, including the National Oil and Hazardous Substances Pollution Contingency Plan (40 CFR 300), the Clean Water Act, and the Oil Pollution Act. At the most fundamental level, these interlocking programs mandate notification and initiation of response actions in a timeframe and on a scale commensurate with the threats posed. The appropriate remedial measures would be implemented to meet federal and state standards designed to ensure protection of human health and environmental quality.

2.2 References

Pipeline and Hazardous Materials Safety Administration (PHMSA). 2008. PHMSA Pipeline Incident Statistics. Website: http://primis.phmsa.dot.gov/comm/reports/safety/PSI.html.

TransCanada. 2006. Keystone Pipeline Project Environmental Report, updated November 15, 2006.

3.0 Species Evaluation

3.1 Federally Endangered

3.1.1 Black-footed Ferret: Endangered/Proposed – Experimental Populations

3.1.1.1 Natural History and Habitat Association

The black-footed ferret (*Mustela nigripes*) was federally listed as endangered on March 11, 1967 (32 FR 4001) under the Endangered Species Preservation Act of October 15, 1966 (80 Stat. 926; 16 United States Code [U.S.C.] 668aa(c)). Listing for the black-footed ferret was revised under the Endangered Species Act on June 2, 1970 (35 FR 8491). Designated non-essential experimental populations were reintroduced to sites in Wyoming, South Dakota, Montana, Arizona, and Colorado between 1991 and 2003; and other non-designated reintroductions have occurred in South Dakota, Arizona, Kansas, Montana and Mexico between 2001 and 2008 (USFWS 2008a). Members of non-essential experimental populations located outside national wildlife refuge or national park lands are protected as proposed species under the ESA (16 U.S.C. 1531 *et seq.*) and as threatened species where they occur on national wildlife refuges or national parks (Section 10(j)). Members of reintroduced populations within the species historic range that have not been designated as experimental populations are protected as endangered.

Historically, the range of the black-footed ferret coincided closely with that of the black-tailed prairie dog (*Cynomys ludovicianus*), Gunnison's prairie dog (*C. gunnisoni*), and white-tailed prairie dog (*C. leucurus*) throughout the intermountain and prairie grasslands extending from Canada to Mexico (USFWS 2008a). The black-footed ferret was considered extinct by the middle of the last century until it was documented in South Dakota in August 1964 (Fortenbery 1972; Hillman 1968; Henderson et al. 1969; Linder et al. 1972) and again in 1981 near Meeteetse, Wyoming (Fitzgerald et al. 1994; USFWS 1988). However, the South Dakota population subsequently disappeared and the Wyoming population declined to only a few remaining individuals. The remaining animals in the wild were captured and provided the basis for the ongoing captive breeding program (USFWS 1988). No wild populations of black-footed ferrets have been found since the capture of the last black-footed ferret in Meeteetse, Wyoming and the captive black-footed ferret population is the primary species population. There are currently 18 reintroduced populations in Montana, South Dakota, Wyoming, Colorado, Utah, Arizona, Kansas, New Mexico and Mexico (USFWS 2008a). No critical habitat has been designated for this species.

Black-footed ferrets are primarily nocturnal, solitary carnivores that dependent on prairie dogs (Fitzgerald et al. 1994). Over 90 percent of the black-footed ferret's diet is comprised of prairie dogs, and ferrets use prairie dog burrows as their sole source of shelter (Fitzgerald et al. 1994). Black-footed ferrets typically breed from March to May (USFWS 1988). The gestation period ranges from 41 to 45 days, with as many as 5 young born in late May and early June. The kits remain underground until late June or early July; upon emerging, they may accompany the female during nocturnal foraging. Male ferrets are not active in rearing the young and live a solitary life except during the breeding season. Ferrets are most commonly observed in late summer or early fall (Hillman and Carpenter 1980).

The black-footed ferret's close association with prairie dogs was an important factor in its decline (USFWS 2008a). Reasons for decline include habitat loss from conversion of native prairie to agriculture, poisoning of prairie dog towns, and habitat modification due to disease (USFWS 2008a).

3.1.1.2 Potential Presence in Project Area

The Steele City Segment of the Project crosses the historic range of the black-footed ferret in Montana, South Dakota, and Nebraska and the Cushing Extension crosses historic range in Kansas. Black-footed ferrets are not known to exist outside of reintroduced populations in the western US. Eleven reintroductions of black-footed ferrets have occurred in Montana, South Dakota, and Kansas all outside of the Project ROW (USFWS

2008a). Natural Heritage Program Data for Montana and South Dakota (Montana Natural Heritage Program 2008; SDGFP 2008) contains no historical records of black-footed ferrets within 5 miles of the proposed ROW.

During the meeting with Keystone representatives on May 5, 2008, the USFWS Grand Island Ecological Services Field Office indicated that ferrets do not occur within the Project area in Nebraska and Project impacts would be negligible. According to the USFWS Pierre Ecological Services Field Office, black-tailed prairie dog towns in the entire state of South Dakota are block-cleared, meaning the towns no longer contain any wild free-ranging black-footed ferrets and activities within these areas that result in the removal of the black-tailed prairie dogs and/or their habitat would no longer be required to meet the Service's survey guidelines for black-footed ferrets or undergo consultations under Section 7 of the ESA (AECOM 2008).

Since the black-footed ferret is dependent on prairie dogs, the assessment of potential impacts to experimental populations was focused on black-tailed prairie dog colonies and complexes that would be affected by construction of the Project. The proposed route does not occur within the known ranges of the Gunnison's prairie dog or white-tailed prairie dog (NatureServe 2009).

Aerial and pedestrian field surveys were conducted in 2008 and 2009 along the entire Steele City Segment of the route to identify prairie dog towns crossed by the construction ROW in Montana. Two active prairie dog towns were identified; one at Milepost (MP) 46.8 in Valley County and one at MP 115.6 in McCone County, Montana (USFWS 2008c). During a meeting with Keystone representatives on February 3, 2009, both the BLM and MFWP indicated that existing data (e.g., activity status, size, and density) was available and could be provided for the town located in Valley County. The data has not been provided to Keystone to date and the need for future black-footed ferret surveys would require further correspondence with the USFWS and BLM once the data has been obtained.

The 14 prairie dog towns found in South Dakota and Nebraska do not require mitigative measures or additional consultation under the ESA because any black-footed ferrets potentially associated with these prairie dog towns are reintroduced and designated as non-essential experimental populations (AECOM 2008, USFWS 2008b).

3.1.1.3 Impact Evaluation

Construction

Direct impacts to black-footed ferrets as a result of construction would include increased habitat loss, habitat fragmentation, and the potential mortality in the event that ferrets are present within the construction area. Indirect impacts would include disturbance and displacement due to increased noise and human presence during construction; reduced habitat availability due to destruction or disturbance of cover habitat in prairie dog towns, and reduced prey availability due to mortality or reduced reproduction of black-tailed prairie dogs.

Two active black-tailed prairie dog colonies were identified as being crossed by the ROW in Montana (AECOM 2009). Information regarding size, density, and activity status (active or inactive) would be determined prior to construction.

Operations

Routine operation of the Project is not expected to affect black-footed ferrets or their habitat. Following construction, maintenance activities (e.g., vegetation management) along the ROW would not preclude the re-establishment of short-grass vegetation within both the temporary and permanent ROW. Normal pipeline operations would have negligible effects on the black-footed ferret. Direct impacts could include mortalities due to exposure to vehicles and human disturbance during ground surveillance that happens annually, but are unlikely due to the nocturnal activity of the black-footed ferret. Indirect impacts during aerial and ground surveillance could result from increased noise and human presence could cause short-term displacement, but are unlikely due to the nocturnal activity of the black-footed ferret and short duration of the aerial reconnaissance once every 2 weeks.

According to the Keystone XL Project Pipeline Temperature Effects Study, the pipeline does have some effect on surrounding soil temperatures, primarily at pipeline depth. Surficial soil temperatures relevant to vegetation are impacted mainly by climate with negligible effect attributed to the operating pipeline. This is because the most the incremental temperature, in the summer months, is found within 24 inches of the pipeline that has a minimum of 4 feet of cover over the top of the pipeline.

Adverse effects to black-footed ferrets resulting from a crude oil spill from the pipeline are highly improbable due to: 1) the low probability of a spill, 2) the low probability of a spill coinciding with the presence of black-footed ferrets, and 3) the low probability of a ferret contacting the spilled product (see **Appendix B**, Pipeline Risk Assessment and Environmental Consequence Analysis).

Power Lines and Substations

Power line routes associated with the Project are likely to attract raptors, known to be predators of the black-footed ferret and their primary prey – prairie dogs. The proposed locations of transmission line routes in Montana would be analyzed for any active prairie dog towns. Protection measures could then be implemented by electrical service providers to minimize raptor perching in accordance with the Avian Power Line Interaction Committee (APLIC), Suggested Practices for Avian Protection on Power Lines (APLIC 1996). Electrical power line providers are responsible for obtaining the necessary approvals or authorizations from federal, state, and local governments to construct new power lines necessary to operate the Keystone XL Project. Keystone would inform electrical power providers of the requirements for ESA consultations with the USFWS for the electrical infrastructure components constructed for the Keystone XL Project to prevent impacts to black-footed ferrets.

3.1.1.4 Cumulative Impacts

A review to identify non-federal projects or activities in the vicinity of the Project was completed by searching publicly available sources, internet news announcements, permit application filings, and agency provided information. No reasonably foreseeable future, state, local, or private actions have been identified within the action area for the proposed Project. Pipeline projects evaluated for cumulative impacts within the EIS would all require one or more federal permits and would each be evaluated for potential impacts on listed species.

3.1.1.5 Conservation Measures

In Nebraska and South Dakota, black-footed ferret surveys are no longer recommended in prairie dog towns. To prevent potential direct or indirect impacts to the black-footed ferret from construction in Montana, Keystone has committed to:

- Provide USFWS with the results of Montana prairie dog town surveys, and would continue to coordinate with the Montana USFWS to determine the need for black-footed ferret surveys at these colonies, in accordance with the USFWS' Black-footed Ferret Survey Guidelines (USFWS 1989). The need for black-footed ferret surveys at these two colonies would be based on relative size and density of affected prairie dog colonies, activity status, and colony location relative to disturbance areas.

- If surveys for black-footed ferrets were required by the Montana USFWS, and if the species was documented to be present within the Project area, additional conservation measures would be developed in coordination with the Montana USFWS.

- Workers would not be allowed to keep domestic pets in construction camps and/or worksites;

- Workers would be made aware of how canine distemper and sylvatic plague diseases are spread (domestic pets and fleas);

- Workers would not be allowed to feed wildlife; and,

- Concentrations of dead and/or apparently diseased animals (prairie dogs, ground squirrels, others) would be reported to the appropriate state and federal agencies.

3.1.1.6 Determination

Effect on Critical Habitat

No critical habitat has been identified for this species. Therefore, the Project would have “no effect” on critical habitat for the black-footed ferret.

Effect on the Species

The Project “may affect, but is not likely to adversely affect” wild or reintroduced non-experimental populations of the endangered black-footed ferret. This determination is based on agency provided information, the lack of potential for occurrence of wild populations of black-footed ferrets within the Project area, and Keystone’s commitment to follow recommended conservation measures.

3.1.1.7 Literature Cited

AECOM. 2009. TransCanada – Keystone XL Phase II Pipeline Meeting Summary: Attachment. Summary Report of the Findings for Sensitive Species and Their Associated Habitat During the 2008 Biological Field Surveys Along the Steele City Segment of the Keystone XL Pipeline Project in Montana. February 5, 2009.

AECOM. 2008. Personal communication between C. Bessken (USFWS) and P. Lorenz (AECOM). June 11, 2008.

Avian Power Line Interaction Committee (APLIC). 1996. Suggested Practices for Raptor Protection on Power Lines. The State of the Art in 1996. Edison Electric Institute and the Raptor Research Foundation. Washington, D.C.

Federal Register. 1967. Endangered Species - 1967. Federal Register 32(48):4001.

Fitzgerald, J. P., C. A. Meaney, and D. M. Armstrong. 1994. Mammals of Colorado. Denver Museum of Natural History and University Press of Colorado. 467 pp.

Fortenbery, D. K. 1972. Characteristics of the Black-Footed Ferret. US Department of the Interior, US Fish and Wildlife Service, Bureau of Sport Fisheries and Resource Publication 109. 8 pp.

Henderson, F. R., P. F. Springer, and R. Adrian. 1969. The Black-Footed Ferret in South Dakota. South Dakota Department of Game, Fish, and Parks. Technical Bulletin No. 4:137.

Hillman, C. N. 1968. Life History and Ecology of the Black-Footed Ferret. M.S. Thesis. South Dakota State University, Brookings, South Dakota. 28 pp.

Hillman, C. N. and J. W. Carpenter. 1980. Breeding Biology and Behavior of Captive Black-Footed Ferrets. International Zoo Yearbook 23:186191.

Linder, R. L., R. B. Dahlgren, and C. N. Hillman. 1972. Black-Footed Ferret Prairie Dog Interrelationships. Reprint from Symposium on Rare and Endangered Wildlife of the Southwestern United States. Albuquerque, New Mexico. New Mexico Department of Game and Fish, Santa Fe, New Mexico. 37 pp.

Montana Natural Heritage Program. 2008. Email response to data request from M. Miller,(MNHP) to P. Lorenz, (AECOM). July 1, 2008.

NatureServe. 2009. NatureServe Explorer: An online encyclopedia of life [web application]. Version 7.1. NatureServe, Arlington, Virginia. Internet website: http://www.natureserve.org/explorer. Accessed 2009.

South Dakota Department of Game, Fish and Parks (SDGFP). 2008. Email response (2 emails) to data request from D. Backlund (SDGFP) to P. Lorenz (AECOM). South Dakota Natural Heritage Program. July 9, 2008.

US Fish and Wildlife Service (USFWS). 1989. Black-footed Ferret Survey Guidelines for Compliance with the Endangered Species Act. Denver, Colorado, and Albuquerque, New Mexico. April 1989. 10 pp.

US Fish and Wildlife Service (USFWS). 1988. Black-Footed Ferret Recovery Plan. US Fish and Wildlife Service, Denver, Colorado. 154 pp.

US Fish and Wildlife Service (USFWS). 2008a. Black-Footed Ferret (*Mustela nigripes*) 5-Year Status Review: Summary and Evaluation. US Fish and Wildlife Service, South Dakota Field Office, Pierre, South Dakota. 38 pp.

U.S Fish and Wildlife Service (USFWS). 2008b. Meeting notes. Fish, Wildlife and Sensitive species potentially occurring along the project route in Nebraska. Correspondence between J. Cochnar (USFWS, Nebraska Ecological Services Field Office) and P. Lorenz (ENSR). May 5, 2008.

U.S. Fish and Wildlife Service (USFWS). 2008c. Meeting notes. Fish, Wildlife and sensitive species potentially occurring along the project route in Montana. Correspondence between L. Hanebury (USFWS, Billings sub-office ecological field services) and P. Lorenz, C. Barnes (ENSR). May 8, 2008.

3.1.2 Interior Least Tern

3.1.2.1 Natural History and Habitat Association

The interior population of the least tern (*Sterna antillarum*) was listed as endangered on May 28, 1985 (50 FR 21784-21792). Historically, the breeding range of this population extended from Texas to Montana and from eastern Colorado and New Mexico to southern Indiana. It included the Rio Grande, Red, Missouri, Arkansas, Mississippi, and Ohio river systems. It winters along the Gulf Coast, the coast of Caribbean Islands, the eastern coast of Central America, and northern South America. The interior least tern continues to breed in most of the historic river systems, although its distribution generally is restricted to less altered river segments (USFWS 1990). No critical habitat has been designated for this population.

Interior least terns spend 4 to 5 months at their breeding sites. They arrive at breeding areas from late April to early June. Nesting areas of interior least terns include sparsely vegetated sand and gravel bars within a wide, unobstructed river channel or salt flats along lake shorelines (Nelson 1998; USFWS 1990). Nesting locations are usually well above the water's edge, because nesting is typically initiated during high river flows, when much of the bars and shorelines are flooded. The extent of available nesting area depends on water levels and the resulting amount of exposed bar and shoreline habitat. The interior least tern also nests on artificial habitats such as sand and gravel pits next to large river systems and dredge islands (Campbell 2003; USFWS 1990).

Least terns are considered colonial nesters that generally consist of up to 20 nests. However, colonies with up to 75 nests have been recorded on the Mississippi River. Most least tern nesting areas on the rivers crossed by the Project would be limited to a few nesting pairs. Least terns nest on the ground in a simple unlined scrape, typically on sites that are sandy and relatively free of vegetation. Usually two to three eggs are laid by late May (USFWS 1990). Both the male and female share incubation duty, which generally lasts from 20 to 25 days. Fledging occurs within 3 weeks after hatching. Departure from colonies varies but is usually complete by early September (USFWS 1990).

The interior least tern is piscivorous, feeding in shallow waters of rivers, streams, and lakes. In addition to small fish, terns also may feed on crustaceans, insects, mollusks, and annelids. On the Great Plains, fish are the primary diet of this species (Nelson 1998; USFWS 1990). Although terns nesting at sand and gravel pits or other artificial habitats may travel up to 2 miles to forage (USFWS 1990), terns usually feed close to their nesting sites. Feeding behavior involves hovering and diving over standing or flowing water. Least terns nest on the ground in a simple unlined scrape, typically on sites that are sandy and relatively free of vegetation. Usually two to three eggs are laid by late May (USFWS 1990).

Alteration and destruction of riverine habitats, primarily as a result of changes in channel characteristics due to channelization, irrigation, and construction of reservoirs and pools, is a threat to the long-term survival of this species. These types of disturbances may eliminate nesting sites, disrupt nesting interior least terns, or may result in sandbars that are unsuitable for nesting due to vegetation encroachment or frequent inundation. The regulation of river flow regimes using dams may also eliminate nesting sites or disrupt nesting interior least terns. Historically, summer flow periods were fairly predictable and consisted of a high flow in May and June and a decline in flow for the remainder of the summer. This decline in flow levels allowed interior least terns to nest as water levels dropped and sandbars became available. The current human regulation of river flow regimes using dams may result in high flow periods extending into the normal nesting period or occurring after nesting has begun, thus flooding active nest sites (USFWS 1990).

3.1.2.2 Potential Presence in Project Area

Steele City Segment

Montana. According to the USFWS Billings Ecological Services Field Office (AECOM 2008a) and the MFWP (AECOM 2009a), the Yellowstone River crossing in Dawson County, Montana has historically supported, and currently supports, breeding populations of interior least terns.

South Dakota. During a meeting with Keystone representatives on June 10, 2008, SDGFP indicated that the Cheyenne River crossing on the border of Meade, Pennington, and Haakon counties has historically supported, or currently supports, breeding populations of interior least terns (AECOM 2008c).

Nebraska. According to the USFWS Grand Island Ecological Services Field Office, the distribution of interior least terns along the Project in Nebraska includes the Platte, Loup, and Niobrara rivers (AECOM 2008b). The Project would cross the Platte River at the border between Merrick and Hamilton counties and sandbars and sand/gravel pits associated with this segment of the river are known to still support breeding populations of least tern. The Loup River in Nance County and the Niobrara River on the border of Keya Paha and Rock counties contain sandbars and also continue to support breeding least terns.

Surveys for suitable habitat and the occurrence of interior least tern nests were conducted at the crossings of the Cheyenne, Platte, Loup, and Niobrara rivers in July of 2008. The full report can be found in **Appendix C**. **Table 3.1-1** summarizes the results of the surveys at these locations in 2008. Surveys were not conducted at the Yellowstone River in Montana in 2008 due to high water levels and lack of landowner permission. However, wetland and waterbody surveys conducted later in 2008 documented suitable habitat at the crossing.

Table 3.1-1 Occurrence Surveys for the Interior Least Tern Along the Steele City Segment of the Keystone XL Project in 2008[1]

State	County	Survey Location	Survey Corridor	Survey Date	Survey Results	Comments
Montana	Dawson	Yellowstone River	At crossing	2008	Incomplete	Suitable habitat present at crossing location.
South Dakota	Meade / Pennington /	Cheyenne River	0.25-mile each side of	July 23, 2008	No least terns observed.	Good bank and poor island nesting habitat, suitable foraging

Table 3.1-1 Occurrence Surveys for the Interior Least Tern Along the Steele City Segment of the Keystone XL Project in 2008[1]

State	County	Survey Location	Survey Corridor	Survey Date	Survey Results	Comments
	Haakon		centerline			habitat at crossing location.
Nebraska	Keya Paha / Rock	Niobrara River	0.25-mile each side of centerline	July 22, 2008	No least terns observed.	Good bank and island nesting habitat, suitable foraging habitat at crossing location.
Nebraska	Merrick / Hamilton	Platte River	0.25-mile each side of centerline	July 22, 2008	No least terns observed.	Good nesting and foraging habitat at crossing location.
Nebraska	Nance	Loup River	0.25-mile each side of centerline	July 21, 2008	No least terns observed.	Suitable nesting and foraging habitat at crossing location.

[1] Survey report prepared November 2008 – A Summary Report of the July 2008 Piping Plover (*Charadrius* melodus) and Least Tern (*Sterna antilarum*) Surveys for the Keystone XL Project (**Appendix C**).

Gulf Coast Segment

Oklahoma. The interior least tern is known to use reaches of the North Canadian River, South Canadian River, and Red River (USFWS 2008). **Table 3.1-2** provides a summary of locations where field surveys would be conducted in 2009. The Project would cross the North Canadian River in Seminole County, the South Canadian River in Hughes County, and the Red River in Bryan County. A review of data from the Oklahoma Natural Heritage Inventory (ONHI) found that the only tracked occurrences of the least tern within 10 miles of the Project area in Oklahoma occurred along the South Canadian River. The closest recorded occurrence was 0.5 mile to the east of the Project area.

Texas. The interior least tern also is known to use reaches of the Red River in Texas. The Project would cross the Red River in Fannin County. The interior least tern also is listed as occurring in Delta, Hopkins, and Wood counties, which are crossed by the Project area. However, there are limited known occurrences of the least tern in these counties and all of these occurrences are outside of the Project area. In Delta and Hopkins counties, the least tern is known to nest along Cooper Lake, which is approximately 7 miles west of the Project area. In Wood County, there is a known sighting of a foraging least tern at Lake Fork, which is approximately 18 miles west of the Project area (AECOM 2009b). Therefore, there is no indication that the least tern uses the Project area in these counties. In Texas, the interior least tern only has the potential to nest in the Project area in Fannin County.

Table 3.1-2 Habitat and Occurrence Surveys for the Interior Least Tern Along the Gulf Coast Segment in 2009[1]

State	County	Survey Location	Survey Corridor	Survey Date	Survey Results	Comments
Oklahoma	Seminole	North Canadian River	0.25-mile each side of centerline	June 24, 2009	No least terns observed	Suitable nesting and foraging habitat at crossing location
Oklahoma	Hughes	South Canadian River	0.25-mile each side of centerline	June 23, 2009	No least terns observed	Suitable nesting and foraging habitat at crossing location
Oklahoma/Texas	Bryan/ Fannin	Red River	0.25-mile each side of centerline	June 25, 2009	Least terns observed	Suitable nesting and foraging habitat at crossing location

[1] Survey report prepared September 2009 – A Field Survey for the Interior Least Tern (*Sterna antilarum athalassos*) Along the Gulf Coast Segment of the Keystone XL Pipeline Project (**Appendix G**).

3.1.2.3 Impact Evaluation

Construction

The primary construction-related impacts would be disturbance and potential exposure to small fuel spills and leaks from construction machinery. The chance of construction-related spills within least tern habitat is minimal. According to Keystone's CMRP (Appendix A), "The Contractor shall not store hazardous materials, chemicals, fuels, lubricating oils, or perform concrete coating within 100 feet of any waterbody. The Contractor shall not refuel construction equipment within 100 feet of any waterbody. If the Contractor must refuel construction equipment within 100 feet of a waterbody, it must be done in accordance with the requirements outlined in Section 3 of the CMRP. All equipment maintenance and repairs would be performed in upland locations at least 100 feet from waterbodies and wetlands. All equipment parked overnight shall be at least 100 feet from a watercourse or wetland, if possible. Equipment shall not be washed in streams or wetlands."

For the Steele City Segment, no interior least terns were observed during the 2008 surveys. Additionally, Keystone has committed to conducting surveys if construction activities occur within the breeding season prior to the activities.

For the Gulf Coast Segment, interior least terns were observed foraging at the Red River and were not present at the North or South Canadian Rivers. Currently, construction activities, including the HDD crossings of the North Canadian, South Canadian, and Red Rivers are scheduled to occur from November 1, 2010 to April 15, 2011, which is outside of the timeframe when least terns are present at these river crossings. Any potential small fuel spills or drilling fluid spills during HDD would be promptly contained and cleaned up and would be unlikely to affect this species.

Steele City Segment

The interior least tern is known to nest within or near the Project at the Platte, Loup, and Niobrara rivers in Nebraska, the Cheyenne River in South Dakota, and the Yellowstone River in Montana. No direct impacts to least tern breeding habitat would be anticipated at these locations, since pipeline placement across the rivers would be completed by the HDD method. Limited clearing of vegetation and limited human access would be required within the riparian areas of these rivers in order to use the True Tracker Wire (3 foot hand cleared path) that is associated with the drilling equipment and in order to access these rivers to potentially withdraw water for the Project's HDD and hydrostatic tests.

Indirect impacts could result from increased noise and human presence at work site locations if breeding terns are located within 0.25 mile of the Project. Prior to construction-related activities that would occur within 0.25 mile from nesting terns, Keystone proposes to conduct presence/absence surveys up to 2 weeks prior to construction-related activities to identify active nest sites, in coordination with the USFWS. If active nest sites are identified, the USFWS would be notified and appropriate protection measures would be implemented on a site-specific basis in coordination with the USFWS.

Impacts to the interior least tern from temporary water reductions during hydrostatic testing in the lower Platte River Basin would be avoided, based on Keystone's plan to withdrawn the volume needed at a rate less than 10 percent of the baseline daily flow and to return water back to its source within a 30-day period. The one time water use for hydrostatic testing, low volume of water used for testing (compared to daily flows in the river basin), and the return of the water to the river source would not impact least tern nesting habitat.

Gulf Coast Segment

The interior least tern is known to use reaches of the North Canadian River, South Canadian River, and Red River. No direct impacts to least tern breeding habitat would be anticipated at these locations, since pipeline placement across the rivers would be completed by the HDD method. Limited clearing of vegetation and limited human access would be required within the riparian areas of these rivers in order to use the True Tracker Wire that is associated with the drilling equipment and in order to access these rivers to potentially withdraw water for the Project's HDD and hydrostatic tests.

Currently, construction activities in the vicinity of the North Canadian River, South Canadian River, and Red River are anticipated to be completed prior to the end of April. Although least terns may begin arriving at breeding sites in late April, egg laying begins in late May (USFWS 1990).Construction activities are anticipated to be complete prior to the nesting period in the Project area. Therefore, construction would not be likely to impact nesting least terns. In the event construction-related activities occur after April 15 at these waterbodies, Keystone would conduct presence/absence surveys to identify occupied breeding territories and/or active nest sites, in coordination with the USFWS to avoid impacts to this species. If occupied breeding territories and/or active nest sites are identified, the USFWS would be notified and appropriate protection measures would be implemented on a site-specific basis in coordination with the USFWS. These measures should limit any impacts to this species resulting from construction activities, increased noise and human presence at work site locations.

<u>Operations</u>

Similar constraints and/or mitigation measures mentioned above may apply to any pipeline maintenance activities.

The major rivers that contain interior least tern habitat would be crossed using the HDD method. It is highly unlikely that a leak in the pipeline would occur coincident with these locations, and when least terns were present. In the event of a leak, the crude oil would need to penetrate greater than 20 feet of overburden before reaching the river, thereby reducing the risk in some cases of crude oil reaching the river and the potential for exposure. Additionally, these major river crossings are subject to an intensive integrity management program stipulated by the USDOT (Integrity Management Rule, 49 CFR 195) and require heavier wall pipe be used for the HDD method. Further, if a significant spill event were to occur, federal and state laws would require clean up.

Direct contact with a crude oil spill could result in adverse effects to interior least terns due to oiling of plumage, ingestion of crude oil from contaminated plumage and prey, and transfer of crude oil to eggs and young. While these exposure routes have the potential to cause adverse effects to individuals, the probability of adverse effects to interior least terns are unlikely due to: 1) the low probability of a spill, and 2) the low probability of the spill coinciding with the presence of least tern individuals. (See **Appendix B**, Pipeline Risk Assessment and Environmental Consequence Analysis, for further information regarding impacts to wildlife from a potential spill event.)

Aerial surveillance would be conducted 26 times per year, or no greater than once every 3 weeks and the aircraft passes by an area quickly at an altitude of about 1,000 feet during those aerial patrols. Indirect impacts during aerial and ground surveillance are unlikely to disturb nesting terns in the Steele City Segment and during migration periods at stopover locations for the Gulf Coast Segment.

According to Keystone's Pipeline Temperature Effects Study, the pipeline would have some effect on surrounding soil temperatures, primarily at pipeline depth. There is limited information on the effects of pipeline temperatures in relation to surface water and wildlife. Because the pipeline is buried greater 20 feet below the river bottom using the HDD method, temperature dissipation effects would be negligible.

Power Lines and Substations

The construction of a new electrical power line segment across the Yellowstone River in Montana and the Platte River in Nebraska would incrementally increase the collision and predation potential for foraging and nesting interior least terns in the Project area. Construction of these power line segments during the breeding season would also potentially disturb nesting and brood-rearing birds. Based on the 2008 habitat and occurrence surveys for this species at the Platte River crossing, breeding habitat quality within line of sight of the Project centerline was considered to be of good quality. Additionally, correspondence with MFWP (AECOM 2008a) and results of the 2008 biological surveys to delineate wetlands and waterbodies identified good quality breeding habitat at the Yellowstone River crossing. Protection measures could then be implemented by electrical service providers to minimize or prevent construction disturbance, collision risk, and predation risk to foraging interior least terns at the Platte River and Yellowstone River crossings with the use of standard measures as outlined in *Mitigating Bird Collision with Power Lines* (APLIC 1994). Electrical power line providers are responsible for obtaining the necessary approvals or authorizations from federal, state, and local governments to construct new power lines necessary to operate the Keystone XL Project. Keystone would inform electrical power providers of the requirements for ESA consultations with the USFWS for the electrical infrastructure components constructed for the Keystone XL Project to prevent impacts to foraging least terns.

3.1.2.4 Cumulative Impacts

A review to identify non-federal projects or activities in the vicinity of the Project was completed by searching publicly available sources, internet news announcements, permit application filings, and agency provided information. No future state, local, or private actions that are reasonably certain to occur in the Project area have been identified for the Project. Pipeline projects evaluated for cumulative impacts within the EIS would all require one or more federal permits and would each be evaluated for potential impacts on listed species.

3.1.2.5 Conservation Measures

The following conservation measures, based on agency consultation, would apply if construction-related activities, including HDD and hydrostatic testing, were to occur during the interior least tern breeding season:

- For the Gulf Coast Segment, pre-construction surveys would occur within 0.25 mile from suitable breeding habitat at the North Canadian River and South Canadian River in Oklahoma and the Red River at the Oklahoma/Texas border, prior to any construction-related activities occurring at these rivers after April 15.
- For the Steele City Segment, pre-construction surveys would occur within 0.25 mile from suitable breeding habitat at the Platte, Loup, and Niobrara rivers in Nebraska; the Cheyenne River in South Dakota; or the Yellowstone River in Montana, no more than 2 weeks prior to construction if construction occurs after April 15.
- Construction would not be permitted within 0.25 mile from an occupied nest site during the breeding season (April 15 though August 15) or until the fledglings have left the nesting area.

3.1.2.6 Determination

Effect on Critical Habitat

No critical habitat has been designated for this species. Therefore, the Project would have "no effect" on critical habitat for the interior least tern.

Effect on the Species

The Project "may affect, but is not likely to adversely affect" interior least terns. This determination is based on Keystone's plan to HDD the North Canadian River, South Canadian River, Red River, Platte River, Loup River, Niobrara River, Cheyenne River, and Yellowstone River; and Keystone's commitment to follow recommended conservation measures identified by the USFWS.

Although it is possible that a spill event could result in an adverse affect on this species, the probability of adverse effects to interior least terns are unlikely due to: 1) the low probability of a spill, 2) the likelihood that most spills would be very small in size, and 3) the very low probability of the spill coinciding with both the location and presence of individual least terns. In the unlikely event of a leak, the crude oil would need to penetrate a significant amount of overburden before reaching the river, thereby reducing the risk in same cases of crude oil reaching the river and the potential for exposure. As a result, no direct or indirect impacts would be likely to result from Project operation.

3.1.2.7 Literature Cited

AECOM 2008a. TransCanada Keystone XL Project - USFWS/MFWP Meeting Notes. Helena, Montana. May 8, 2008.

AECOM 2008b. TransCanada Keystone XL Project - USFWS/SDGFP Meeting Notes. Lincoln, Nebraska. May 5, 2008.

AECOM 2008c. TransCanada Keystone XL Project - USFWS/SDGFP Meeting Notes. Pierre, South Dakota. June 10, 2008.

AECOM. 2009a. Personal communication between A. Dood (MFWP) and P. Lorenz (AECOM). March 12 and 13, 2009.

AECOM 2009b. Personal communication between O. Bocanegra (USFWS) and D. Endriss (AECOM). April 28, 2009.

Avian Power Line Interaction Committee (APLIC). 1994. Mitigating Bird Collision with Power Lines: The State of the Art in 1994. Edison Electrical Institute. Washington, D.C.

Campbell, L. 2003. Endangered and Threatened Animals of Texas: Their Life Histories and Management. Revised and approved by U.S. Fish and Wildlife Service. Texas Parks and Wildlife, Wildlife Division, Austin, Texas. 127 pp. Internet website: http://www.tpwd.state.tx.us/huntwild/wild/species/endang/index.phtml. Accessed August 12, 2008.

Federal Register. 1985. Endangered and Threatened Wildlife and Plants; Interior Population of Least Tern to be Endangered. Final Rule. Federal Register 50(102):21784-21792.

Nelson, D. L. 1998. Least Tern In: Colorado Breeding Bird Atlas. H. E. Kingery (ed.) Published by Colorado Bird Atlas Partnership; co-published by Colorado Division of Wildlife. pp. 192-193.

US Fish and Wildlife Service (USFWS). 1990. Recovery Plan for the Interior Least Tern (*Sterna antillarum*). US Fish and Wildlife Service. Twin Cities, Minnesota. 90 pp.

US Fish and Wildlife Service (USFWS). 2008. U. S. Fish and Wildlife Service-Tulsa, Ecological Services Field Office. Letter dated December 3, 2008.

3.1.3 Whooping Crane

3.1.3.1 Natural History and Habitat Association

The whooping crane (*Grus americana*) was listed as endangered on March 11, 1967 (32 FR 4001). Whooping cranes occur only in North America and the total wild population was estimated at 338 birds in 2006 (Canadian Wildlife Service [CWS] and USFWS 2007). This estimate includes the 215 birds in the only self-sustaining Aransas-Wood Buffalo National Park Population (AWBP) that winters in coastal marshes in Texas and migrates to Canada to nest in Wood Buffalo National Park and adjacent areas as well as the 123 captive-raised birds that have been released in Florida and the eastern US in an effort to establish a non-migratory population in Florida and a migratory population between Florida and Wisconsin (CWS and USFWS 2007). The last remaining bird in the Rocky Mountain reintroduced population died in the spring of 2002 (CWS and USFWS 2007). The overall decline of the whooping crane has been attributed to habitat loss, direct disturbance and hunting by humans, predation, disease, and collisions with manmade features (CWS and USFWS 2005).

During spring and fall migration, the AWBP population moves through the central Great Plains including portions of Montana, South Dakota, Nebraska, Kansas, Oklahoma, and Texas. Birds from the AWBP population depart from their wintering grounds in Texas from late March through May 1. Fall migration typically begins in mid-September with most birds arriving on wintering grounds between late October and mid-November (CWS and USFWS 2005).

Whooping cranes use a variety of habitats during migration (Howe 1987; Lingle 1987; Lingle et al. 1991; Johns et al. 1997). The whooping crane is most closely associated with river bottoms, marshes, potholes, prairie grasslands, and croplands (CWS and USFWS 2005). In states without riverine habitats, seasonally and semi-permanently flooded palustrine wetlands are used for roosting and various cropland and emergent wetlands for feeding (Austin and Richert 2001; Johns et al. 1997). They generally feed on small grains (including a number of cultivated crops), aquatic plants, insects, crustaceans, and small vertebrates (Oklahoma State University 1993). Cranes roost on submerged sandbars in wide unobstructed channels that are isolated from human disturbance (Armbruster 1990).

Critical habitat for migrating birds has been designated in four states (Nebraska, Kansas, Oklahoma, and Texas) crossed by the Project (43 FR 20938-942, CWS and USFWS 2005). However, no critical habitat would be crossed by the Project.

3.1.3.2 Potential Presence in Project Area

<u>Steele City Segment</u>

The whooping crane occurs as a migrant only throughout the Steele City Segment of the Project. The majority of the Project route in South Dakota and Nebraska is located within the primary migration pathway of whooping cranes through the central Great Plains (CWS and USFWS 2005). The Project in Montana is west of the primary migration pathway. However, individual birds can be found outside the primary movement corridor and could possibly occur within the Project area in Montana during spring and fall migration. Possible areas used by whooping cranes during migration would include major rivers and their associated wetlands crossed by the Project.

During a meeting with Keystone representatives on February 3, 2009, the MFWP identified the Yellowstone River as a potential stop-over site for whooping cranes (AECOM 2009). Additional correspondence with SDGFP indicates the White and Cheyenne rivers contain suitable stop-over habitat although it is very unlikely that whooping cranes would be present at these crossings (AECOM 2008a). According to the USFWS Grand Island Ecological Services Field Office and the NGPC, major river systems used by whooping cranes in

Nebraska include the Platte, Loup, Republican, Cedar, and Niobrara rivers (USFWS 2008). All but the Republican River is crossed by the Project. Designated Critical Habitat along the Platte River in Nebraska occurs several miles west of the Project (CWS and USFWS 2005).

Gulf Coast Segment and Houston Lateral

The Project in Oklahoma and Texas is generally east of the primary migration pathway of the whooping crane through the central Great Plains (CWS and USFWS 2007). During a meeting with representatives from Keystone on July 1, 2008, the ODWC confirmed that they did not have any records of whooping crane migration stopovers within the Project area in Oklahoma (AECOM 2008b). Additionally, no records of the whooping crane using the Project area for migration stopovers were found during reviews of species occurrence data from the ONHI or the Texas Natural Diversity Database (TXNDD). However, the figure of this species' primary migration pathway in CWS and USFWS (2007) depicts two sightings of a whooping crane in eastern Oklahoma. The Tulsa Ecological Services Field Office recommended the identification of suitable habitat for migration stopovers by the whooping crane. Suitable habitat for migration stopovers by this species includes shallow emergent wetlands or riverine habitats that are within 1 km (0.6 mile) of a suitable feeding site.

3.1.3.3 Impact Evaluation

Construction

The primary construction-related impacts would be disturbance and potential exposure to small fuel spills and leaks from construction machinery. The chance for construction-related spills within whooping crane roosting and foraging habitat is minimal. According to Keystone's CMRP (**Appendix A**), "The Contractor shall not store hazardous materials, chemicals, fuels, lubricating oils, or perform concrete coating within 100 feet of any waterbody. The Contractor shall not refuel construction equipment within 100 feet of any waterbody. If the Contractor must refuel construction equipment within 100 feet of a waterbody, it must be done in accordance with the requirements outlined in Section 3 of the CMRP. All equipment maintenance and repairs would be performed in upland locations at least 100 feet from waterbodies and wetlands. All equipment parked overnight shall be at least 100 feet from a watercourse or wetland, if possible. Equipment shall not be washed in streams or wetlands." The potential magnitude of spill effects varies with multiple factors, the most significant of which include the amount of material released, the size of the spill dispersal area, the type of spills, the species assemblage present, climate, and the spill response tactics employed.

No direct impacts to the whooping crane are anticipated from the construction of the Project along the Steele City Segment or the Gulf Coast Segment/Houston Lateral. Suitable roosting and/or foraging habitats occur within the Project area at major river crossings including the Yellowstone River, Cheyenne River, White River, Niobrara River, Cedar River, Loup River, Platte River, North Canadian River, South Canadian River, and Red River. Habitats at these rivers would be crossed by HDD, so potential habitat loss, alteration, or fragmentation would be negligible. Limited clearing of vegetation and limited human access would be required within the riparian areas of these rivers in order to use the HDD electronic guidance system (True Tracker Wire) that is associated with the drilling equipment and in order to access these rivers to potentially withdraw water for the Project's HDD and hydrostatic tests. Any vegetation disturbance adjacent to suitable riverine habitat would be allowed to completely revegetate following construction. Based on the current migration pathway of this species, potential occurrence within or near the Project area could occur but would be extremely rare and would be limited to a few individuals or small groups of migrant birds (CWS and USFWS 2007).

Indirect impacts could result from migrating individuals being disturbed and displaced due to noise and human presence during construction, if construction were to occur during spring or fall migrations.

Because Keystone proposes to use a small volume of water withdrawn at less than 10 percent of the daily flow rate of the stream, and would return that water to the same source after hydrotesting—with no additives or chemicals added, water use is unlikely to affect the amount of roosting or foraging habitat along the rivers used by whooping cranes. Indirect impacts to the whooping crane from temporary water reductions during

hydrostatic testing in the lower Platte River Basin would be considered negligible, based on Keystone's plan to return water back to its source within a 30-day period and the volume needed would be withdrawn at a rate less than 10 percent of the baseline daily flow.

Operations

Normal operation of the pipeline would not be expected to affect the whooping crane or habitats used during migration. Pipeline surveillance would involve routine low-level aerial over flights 26 times per year or no greater than every 3 weeks and/or ground based inspections once per year. Over flights during migration periods would have the potential to disturb migrant whooping cranes. Most over flights would normally be during late-morning or mid-day at an altitude of about 1,000 feet, although over flights could occur at any time of day, and would be unlikely to disturb roosting or foraging cranes. Maintenance inspections that would require external examination of the pipeline would be unlikely to coincide with crane roosting or foraging habitats, but would have the potential to disturb migrant cranes.

Roosting habitats at rivers crossed by the HDD method would typically have 20 feet or more of overburden between the pipeline and river bottom. Therefore, heat dissipated from the pipeline would not affect riverine roosting habitats.

Direct contact with a crude oil spill could result in adverse effects to whooping cranes due to oiling of plumage and ingestion of crude oil from contaminated plumage and prey. While these exposure risks have the potential to cause adverse effects to individuals, the probability of adverse effects to whooping cranes are unlikely due to: 1) the low probability of a spill, 2) the low probability of the spill coinciding with the presence of migrating whooping cranes or migration habitats, and 3) the low probability of a whooping crane contacting the spilled product (see **Appendix B**, Pipeline Risk Assessment and Environmental Consequence Analysis). In the unlikely event of a pipeline leak, the crude oil would need to penetrate this significant amount of overburden before reaching the river, thereby reducing the risk of crude oil reaching the river and thereby reducing the potential for whooping crane exposure. Additionally, the major river crossings are subject to an intensive integrity management program stipulated by the USDOT (Integrity Management Rule, 49 CFR Part 195). Further, if a significant spill event were to occur, federal and state laws would require clean up.

Power Lines and Substations

Power lines associated with the Project are collision hazards to migrant whooping cranes. The construction of new electrical power line segments, especially those across riverine roosting habitats (Yellowstone River in Montana and Platte River in Nebraska) or between roosting habitat and nearby foraging habitat including wetlands and grain fields would incrementally increase the collision hazard for migrating whooping cranes because a portion the Project area is located within the primary migration corridor for this species. The Platte River crossing is within the primary migration corridor for whooping cranes, but the Yellowstone River crossing is on the extreme western edge. Based on preliminary transmission line routes, a total of 9.8 miles of wetland and water would be crossed by transmission lines to pump stations (TransCanada 2009). An analysis of suitable migration stop-over habitat (e.g., large waterbodies, wetlands, and associated agricultural fields) in relation to these preliminary routes for associated transmission lines identified 74 locations within the primary migration corridor where new transmission lines could potentially increase collision hazards for migrating whooping cranes. There is no indication, however, that any of these locations have been or would be used by whooping cranes. Potential roosting and foraging habitat in proximity to the new pump station transmission lines were identified for 19 pump stations including:

- PS-09 Phillips County, Montana – 11 locations,
- PS-10 Valley County, Montana – 7 locations,
- PS-12 McCone County, Montana – 2 locations,

- PS-13 Prairie County, Montana – 1 location,
- PS-15 Harding County, South Dakota – 4 locations,
- PS-16 Harding County, South Dakota – 6 locations,
- PS-17 Meade County, South Dakota – 1 location,
- PS-18 Haakon County, South Dakota – 7 locations,
- PS-19 Haakon County, South Dakota – 2 locations,
- PS-20 Tripp County, South Dakota – 7 locations,
- PS-22 Holt County, Nebraska – 2 locations,
- PS-23 Valley County, Nebraska – 6 locations,
- PS-24 Merrick/Hamilton County, Nebraska – 2 locations,
- PS-25 York/Fillmore Counties, Nebraska – 4 locations,
- PS-26 Jefferson County, Nebraska – 3 locations,
- PS-27 Clay County, Kansas – 5 locations,
- PS-29 Butler County, Kansas – 1 location,
- PS-36 Delta County, Texas – 1 location,
- PS-38 Smith County, Texas – 1 location, and
- PS-39 Cherokee County, Texas – 1 location.

Protection measures that could be implemented by electrical service providers to minimize or prevent collision risk to migrating whooping cranes include the use of standard measures as outlined in *Mitigating Bird Collision with Power Lines* (APLIC 1994). Electrical power line providers are responsible for obtaining the necessary approvals or authorizations from federal, state, and local governments to construct new power lines necessary to operate the Keystone XL Project. Keystone would advise electrical power providers of their ESA consultation requirements with the USFWS for the electrical infrastructure components constructed for the Project to prevent impacts to whooping cranes.

3.1.3.4 Cumulative Impacts

A review to identify non-federal projects or activities in the vicinity of the Project was completed by searching publicly available sources, internet news announcements, permit application filings, and agency provided information. No future state, local, or private actions that are reasonably certain to occur in the Project area have been identified for the Project. Pipeline projects evaluated for cumulative impacts within the EIS would all require one or more federal permits and would each be evaluated for potential impacts on listed species.

3.1.3.5 Conservation Measures

The USFWS has recommended that if this species happens to land in close proximity to the construction ROW during construction, its presence would be documented and appropriate mitigation measures would be implemented to prevent direct impacts.

3.1.3.6 Determination

<u>Effect on Critical Habitat</u>

The Project would have “no effect” on critical habitat for the whooping crane. The area of designated critical habitat for the whooping crane in Nebraska is upstream from the Platte River crossing, and other critical habitat areas are well outside of the Project area.

Effect on the Species

The Project "may affect, but is not likely to adversely affect" whooping cranes. This determination is based on the rarity of the species, its status as a migrant through the Project area, and Keystone's commitment to follow recommended mitigation measures of the USFWS. As a result, no direct impacts are expected to result from construction. Indirect impacts from disturbance of migrating whooping cranes during Project construction and hydrostatic testing are expected to be negligible, based on the described avoidance and conservation measures.

Although it is possible that a large spill event could result in an adverse affect on this species and its migration habitat, the probability of adverse effects to whooping cranes are unlikely due to: 1) the low probability of a spill, 2) the low probability of the spill coinciding with the presence of whooping cranes or migration habitats, and 3) the low probability of a whooping crane contacting the spilled product.

3.1.3.7 Literature Cited

AECOM. 2008a. Personal communication between D. Backlund (SDGFP) and P. Lorenz (AECOM). July 9, 2008.

AECOM 2008b. TransCanada Keystone XL Project - ODWC Meeting Summary. Oklahoma City, Oklahoma. July 1, 2008.

AECOM 2009. TransCanada Keystone XL Project - USFWS/MFWP Meeting Summary. Glasgow, Montana. February 3, 2009.

Armbruster, M. J. 1990. Characterization of habitat used by whooping cranes during migration. Biological Report 90(4):1-16.

Austin, J. E. and A. L. Richert. 2001. A Comprehensive Review of the Observational and Site Evaluation Data of Migrant Whooping Cranes in the United States, 1943-99. US Geological Survey, Northern Prairie Wildlife Research Center, Jamestown, North Dakota, and State Museum, University of Nebraska, Lincoln, Nebraska. 157 pp. Internet website http://www.npwrc.usgs.gov/resource/2003/wcdata/wcdata/.htm. (Version 01JUL03).

Avian Power Line Interaction Committee (APLIC). 1994. Mitigating Bird Collision with Power Lines: The State of the Art in 1994. Edison Electrical Institute. Washington, D.C.

Canadian Wildlife Service (CWS) and US Fish and Wildlife Service (USFWS). 2005. Draft International Recovery Plan for the Whooping Crane. Ottawa: RENEW and USFWS, Albuquerque, New Mexico. 196 pp.

Canadian Wildlife Service (CWS) and US Fish and Wildlife Service (USFWS). 2007. International recovery plan for the whooping crane. Ottawa: Recovery of Nationally Endangered Wildlife (RENEW), and USFWS, Albuquerque, New Mexico. 162 pp.

Federal Register. 1967. Endangered Species List-1967. Federal Register 32:4001.

Federal Register. 1978. Determination of Critical Habitat for the Whooping Crane. Federal Register 43:20938-20942.

Howe, M. A. 1987. Habitat Use by Migrating Whooping Cranes in the Aransas-Wood Buffalo Corridor. Pages 303-311, In: J. C. Lewis and J. W. Ziewitz, eds. Proc. 1985 Crane Workshop. Platte River Whooping Crane Habitat Maintenance Trust and USFWS, Grand Island, Nebraska.

Johns, B. W., E. J. Woodsworth, and E. A. Driver. 1997. Habitat Use by Migrant Whooping Cranes in Saskatchewan. Proceedings North American Crane Workshop 7:123-131.

Lingle, G. R. 1987. Status of Whooping Crane Migration Habitat Within the Great Plains of North America. Pages 331-340 In: J. C. Lewis and J. Zewitz, eds. Proc. 1985. Crane Workshop. Platte River Whooping Crane Habitat Maintenance Trust and USFWS, Grand Island, Nebraska.

Lingle, G. R., G. A. Wingfield, and J. W. Ziewitz. 1991. The Migration Ecology of Whooping Cranes in Nebraska, U.S.A. Pages 395-401 In: J. Harris, ed. Proc. 1987 International Crane Workshop, International Crane Foundation, Baraboo, Wisconsin.

Oklahoma State University. 1993. Oklahoma's Endangered and Threatened Species. Forestry Extension Report #6. Oklahoma Cooperative Extension Service, Division of Agricultural Sciences and Natural Resources, Oklahoma State University. 43 pp.

TransCanada Keystone Pipeline, L.P. (TransCanada). 2009. TransCanada Keystone XL Project Environmental Report. Revised July 6, 2009. Document No.: 10623-006. Submitted to US Department of State and Bureau of Land Management by TransCanada Keystone Pipeline, L.P.

US Fish and Wildlife Service (USFWS). 2008. USFWS – Ecological Services, Nebraska Field Office. Letter dated October 8, 2008.

3.1.4 Pallid Sturgeon

3.1.4.1 Natural History and Habitat Association

The pallid sturgeon (*Scaphirhynchus albus*) was listed as endangered on September 6, 1990 (55 FR 36641). This species is native to the Missouri and Mississippi rivers and is adapted to habitat conditions in these large rivers prior to river modifications. Preferred habitat is described as large, free-flowing rivers with warm water, turbid habitat with a diverse mix of physical habitats that were in a constant state of change (USFWS 1993). Pallid sturgeon are adapted for living close to the bottom of large, shallow, silty rivers with sand and gravel bars. Adults and larger juveniles feed primarily on fish while smaller juveniles feed primarily on the larvae of aquatic insects (Wilson 2004).

Macrohabitat environments required by pallid sturgeon are formed by floodplains, backwaters, chutes, sloughs, islands, sandbars, and main channel waters within the large river ecosystem. Prior to dam development along the Missouri and Mississippi rivers, these features were in a constant state of change. With the introduction of dams and bank stabilization, areas of former river habitat have been covered by lakes, water velocity has increased in remaining river sections making deep stretches of clear water, and water temperatures have significantly decreased. All of these factors are believed to have contributed to the decline in pallid sturgeon populations (USFWS 1993).

The pallid sturgeon has never been common since it was first described in 1905, and catch records and recovery and research efforts since that time have indicated a steady decline in this species (Wilson 2004). The historic range of this fish formerly included the Mississippi River (below its confluence with the Missouri River), the Missouri River, and the very lower reaches of the Platte, Kansas, and Yellowstone rivers near their confluence with the Missouri or Mississippi (USFWS 1993). According to the USFWS pallid sturgeon recovery plan (USFWS 1993), since 1980, reports of most frequent occurrence are from the Missouri River between the Marias River and Ft. Peck Reservoir in Montana; between Ft. Peck Dam and Lake Sakakawea (near Williston, North Dakota); within the lower 113 km (70 miles) of the Yellowstone River to downstream of Fallon, Montana; in the headwaters of Lake Sharpe in South Dakota; and from the Missouri River near the mouth of the Platte River near Plattsmouth, Nebraska. Although widely distributed, pallid sturgeon remains one of the rarest fish in the Missouri and Mississippi river basins.

Critical habitat has not been designated for the pallid sturgeon, but sections of rivers relatively unchanged by dam construction and operation that maintain large, turbid, free-flowing river characteristics are important in maintaining residual populations of this species.

3.1.4.2 Potential Presence in Project Area

The potential for this species to occur within the Project area exists along the Steele City Segment at the crossing of the Missouri River below Ft. Peck Dam and the crossing of the Yellowstone River downstream of Fallon, Montana. Pallid sturgeon also occur in the lower Platte River downstream from the proposed Project crossing.

3.1.4.3 Impact Evaluation

Construction

Suitable habitat within the Missouri and Yellowstone rivers would be crossed by HDD, therefore no direct impacts to pallid sturgeon habitat are expected to occur as a result of Project construction (USFWS 2008). Although pallid sturgeon may be present at the crossings of the Missouri and Yellowstone rivers, these river crossings would be crossed using the HDD method, and there would be no direct effect on potential river bottom habitat for pallid sturgeon.

At streams and rivers crossed by the HDD method, a pump and hose would be placed in the waterbody to provide water to the HDD operation. The intake end of this pump would be screened using an appropriate mesh size to prevent entrainment or entrapment of larval fish or other aquatic organisms. The withdrawal rates for the pumps would be designed to reduce the potential for entrainment or entrapment of aquatic species. Many of the HDD installations would take place early in the construction period, potentially during the pallid sturgeon spawning period. However, the combination of effective screening and controlled water withdrawal rates would reduce the potential to impact the species.

The Missouri, Yellowstone, and Platte rivers have been identified as water sources to be used for hydrostatically testing the pipeline. During this testing process, a pump would be placed in or adjacent to the river for the duration of the water intake and filling period. The intake end of the pump would be screened to prevent entrainment of larval fish or debris. All water pump intake screens would be periodically checked for entrainment of fish. Should a sturgeon become entrained, Keystone would immediately contact the USFWS to determine if additional protection measures would be required. Care would be taken during the discharge to prevent erosion or scouring of the waterbody bed and banks.

Platte River basin water depletions in Nebraska may affect pallid sturgeon habitats by reducing the amount of water available for this species in the lower Platte River. Impacts to the pallid sturgeon from temporary water reductions during hydrostatic testing in the lower Platte River Basin would be avoided, based on Keystone's plan to withdraw the volume needed at a rate less than 10 percent of the baseline daily flow and to return water back to its source within a 30-day period.

Operations

Routine pipeline operations are not expected to affect the pallid sturgeon. Pump Station 11 is near the Missouri River and would have one incandescent light above the station door of the electrical building that is unlikely to have an effect on the river at night.

The Missouri, Yellowstone and Platte rivers would be crossed by HDD. In the highly unlikely event that a leak occurs in the pipeline, the crude oil would need to penetrate a significant amount of overburden before reaching the river, thereby reducing the risk in some cases of crude oil reaching the river and the potential for exposure. Additionally, these major rivers also are subject to an intensive integrity management program stipulated by the USDOT (Integrity Management Rule, 49 CFR 195). Further, if a significant spill event were to occur, federal and state laws would require clean up.

In the unlikely event of a spill that would enter a river, exposure to crude could result in adverse toxicological effects to pallid sturgeon. However, the probability of adverse effects to pallid sturgeon are unlikely due to: 1) the low probability of a spill, 2) the low probability of a spill in a river reach where pallid sturgeon are present, and 3) the low probability of the spill reaching a river with pallid sturgeon in sufficient amounts to cause toxic effects (See **Appendix B**, Pipeline Risk Assessment and Environmental Consequence Analysis).

3.1.4.4 Cumulative Impacts

A review to identify non-federal projects or activities in the vicinity of the Project was completed by searching publicly available sources, internet news announcements, permit application filings, and agency provided information. No future state, local, or private actions that are reasonably certain to occur in the Project area have been identified for the Project. Pipeline projects evaluated for cumulative impacts within the EIS would all require one or more federal permits and would each be evaluated for potential impacts on listed species.

3.1.4.5 Conservation Measures

The Project proposes to implement HDD under the Missouri and Yellowstone rivers. The intake end of the pump would be screened to prevent entrainment of larval fish or debris. The intake screens would be periodically checked for entrainment of fish. Should a sturgeon become entrained, Keystone would immediately contact the USFWS to determine if additional protection measures would be required. Water used for hydrostatic testing is not chemically treated and would be returned to the source.

3.1.4.6 Determination

<u>Effect on Critical Habitat</u>

Critical habitat has not been designated for the pallid sturgeon. Therefore, the Project would have “no effect” on critical habitat for the pallid sturgeon.

<u>Effect on the Species</u>

The Project “may affect, but is not likely to adversely affect” the pallid sturgeon. This determination is based on Keystone’s plan to HDD the Missouri, Yellowstone, and Platte rivers and Keystone’s commitment to follow recommended mitigation measures of the USFWS.

Although it is possible that a spill event could result in an adverse affect on this species, the probability of such an event would be unlikely due to: 1) the low probability of a spill, 2) low probability of a spill in a river reach where pallid sturgeon are present, and 3) the low probability of the spill reaching a major river with pallid sturgeon in sufficient amounts to cause toxic effects. In the unlikely event of a leak, the crude oil would need to penetrate a significant amount of overburden before reaching the river, thereby reducing the risk in some cases of crude oil reaching the river and the potential for exposure. As a result, no direct or indirect impacts would result from construction.

3.1.4.7 Literature Cited

Federal Register. 1990. Endangered and Threatened Wildlife and Plants; Determination of Endangered Status of Pallid Sturgeon. Final Rule. Federal Register 55(173):36641-36647.

US Fish and Wildlife Service (USFWS). 1993. Pallid Sturgeon Recovery Plan. USFWS, Bismarck, North Dakota. 55 pp.

US Fish and Wildlife Service (USFWS). 2008. Meeting Notes. Fish, wildlife and sensitive species potentially occurring along the project route in Montana. Correspondence between L. Hanebury (USFWS) and P. Lorenz, C. Barnes (ENSR). May 8, 2008.

Wilson, R. 2004. Pallid sturgeon recovery update. Issue No.14:1-25. Internet website: http://www.fws.gov/moriver/Pallid%20Sturgeon%20Activities.htm.

3.1.5 American Burying Beetle

3.1.5.1 Natural History and Habitat Association

The American burying beetle (*Nicrophorus americanus*) was listed as e*ndangered o*n July 13, 1989 (54 FR 29652). The American burying beetle has historically been recorded in 35 states in the eastern and central US. Populations declined from the 1920s to the 1960s and the American burying beetle is currently only found at the peripheries of its former range. In 1983 the American burying beetle was included as an endangered species in the Invertebrate Red Book published by the International Union for the Conservation of Nature (ENSR 2008).

The American burying beetle is the largest carrion-feeding insect in North America reaching a length of about 4 cm and a weight of up to 3 grams. Like other carrion beetles, American burying beetles search the environment for fresh carcasses which they use for feeding and rearing of offspring. Because carrion is a typically limited resource, the discovery of a carcass often occurs within 2 days, but has been reported to occur as quickly as 35 minutes post death (Milne and Milne 1976).

Considering the broad geographic range formerly occupied by the American burying beetle, it is unlikely that vegetation or soil type were historically limiting. Habitats in Nebraska where these beetles have recently been found consist of grassland prairie, forest edge, and scrubland. In Oklahoma, the American burying beetle has been captured via baited pitfall traps in a variety of habitats including grasslands, grazed pastures, bottomland forest, riparian zones, and oak-hickory forest (USFWS 2005). Unlike other members of the *Nicrophorus genus*, no strong correlation with soil type or land use seems to exist (Bishop et al. 2002; Bishop and Hoback unpublished data). Within remaining range for the American burying beetle in Nebraska, there is a large population (>500 individuals) in the southern loess hills (Bedick et al. 1999; Peyton 2003) and another large population in northern Nebraska and southern South Dakota (Hoback and Snethen unpublished data). In 2002, nine new county records were obtained using limited trapping in prime habitat consisting of sub-irrigated wet meadows with mature trees and few visible impacts from row agriculture. Additional sampling between 2002 and the present has expanded knowledge of the distribution of American burying beetle in Nebraska. However, large areas within Nebraska remain unexamined for remnant populations and in 2006, sampling in Custer County re-discovered a small population of American burying beetle. Additional sampling since 1989 has expanded the distribution of the American burying beetle in Oklahoma to a total of 21 counties (USFWS 2008a).

The primary cause of decline of the American burying beetle is thought to be habitat loss, degradation, and fragmentation, all which correspond to a decrease in availability of suitable carrion. Developed land and land that has been converted for agricultural, grazing, and other uses, often favors scavenging mammal and bird species that compete with carrion beetles for resources. Additionally, these types of habitat alterations have generally led to declines in ground nesting birds, which probably historically provided a large portion of the carrion available to this species. Fire suppression in prairie habitats allows the encroachment of woody species, particularly the eastern red cedar, which is thought to degrade habitat for burying beetles by limiting their ability to forage for carrion. The red-imported fire ant; which has extended its range in the southeastern and south central US and is most numerous in open, disturbed habitats; also has been identified as a cause of the decline of this species (USFWS 2008a).

3.1.5.2 Potential Presence in Project Area

Steele City Segment

The Project would result in construction of approximately 500 miles of pipeline through Nebraska and South Dakota. The pipeline would cross 6 counties (Tripp County, South Dakota; Keya Paha, Rock, Holt, Garfield, and Wheeler counties in Nebraska) within the known range of American burying beetles. Additional Nebraska counties may hold undiscovered American burying beetle populations, especially where suitable habitat is present. Known habitat occurrence data for the American burying beetle in the proposed Project area is presented in **Table 3.1-3**.

Table 3.1-3 American Burying Beetle Occurrence along the Steele City Segment of the Keystone XL Project

State	County	Distance (Miles) Crossed by ROW[1]	Suitable American Burying Beetle Habitat
South Dakota	Tripp	59.29	Extensive
Nebraska	Keya Paha	18.65	Extensive
Nebraska	Rock	9.41	Extensive
Nebraska	Holt	44.81	Extensive
Nebraska	Garfield	9.61	Limited
Nebraska	Wheeler	18.67	Limited
Nebraska	Greeley	23.86	Unknown
Nebraska	Boone	3.39	Unknown
Nebraska	Nance	17.13	Unknown
Nebraska	Merrick	15.50	Unknown
Nebraska	Hamilton	6.73	Unlikely
Nebraska	York	30.19	Unlikely
Nebraska	Fillmore	14.70	Unlikely
Nebraska	Saline	16.76	Unlikely
Nebraska	Jefferson	25.77	Unlikely

[1] Based on the 021509 Centerline.

Source: ENSR 2008.

Gulf Coast Segment

Oklahoma

In Oklahoma, the American burying beetle has the potential to occur in the Project area in Creek, Okfuskee, Seminole, Hughes, Coal, Atoka, and Bryan counties. A total of 138 miles are crossed by the ROW in Oklahoma within counties that are supporting or likely to support this species (**Table 3.1-4**). Of this 138 miles, 26.5 miles were classified as prime habitat for the American burying beetle, 24.9 miles were classified as good habitat, and 27.8 miles were classified as fair habitat for a total of 79.2 miles of suitable habitat for this species (Bauer and Abbott 2009). A total of 2,206 acres of potential habitats would be affected by construction in Oklahoma including: developed land - 230 acres; agricultural land – 160 acres; rangeland – 1,178 acres; forests – 598 acres; and water/wetlands – 40 acres. In Oklahoma, 256 acres of upland forested land would be permanently converted to emergent wetlands. Existing land uses would not be converted.

Texas

In Texas, the USFWS has recommended surveys for the American burying beetle in the Project area in Lamar County (USFWS 2008b). Field investigations and remote sensing efforts completed during the summer of 2009, characterized the quality and amount of potential habitat within the ROW in Lamar County, Texas (**Table 3.1-4**). Surveys to determine the presence/absence of American burying beetles within suitable habitat along the route in Lamar County during the summer of 2009 did not verify the presence of the American burying beetle but did capture several other carrion beetles of the same genus (*Nicrophorus*) (Bauer and Abbott 2009).

Table 3.1-4 American Burying Beetle Occurrence along the Gulf Coast Segment of the Keystone XL Project

State	County	Distance (Miles) Crossed by ROW[1]	Suitable American Burying Beetle Habitat
Oklahoma	Creek	5.75	Historic
Oklahoma	Okfuskee	15.52	Confirmed
Oklahoma	Seminole	20.48	Likely
Oklahoma	Hughes	27.61	Confirmed
Oklahoma	Coal	26.16	Confirmed
Oklahoma	Atoka	19.79	Confirmed
Oklahoma	Bryan	22.68	Confirmed
Texas	Lamar	28.48	Confirmed

[1] Based on the 021509 Centerline.

Source: Bauer and Abbott 2009 (Appendix H).

3.1.5.3 Impact Evaluation

Construction

Direct impacts to American burying beetles as a result of construction would result in habitat loss, alteration of suitable habitat to unsuitable habitat, increased habitat fragmentation, and the potential mortality to eggs, larvae and adults through exposure during excavation and construction vehicle traffic in the event that American burying beetles are present along the ROW. Artificial lighting may disrupt foraging and increase predation on the American burying beetle. Construction would take place during the daylight hours and construction areas would not use artificial lighting, therefore, no impacts from lighting would occur. Localized fuel spills may occur during construction, however, Keystone would develop and implement an SPCC for potential construction-related fuel spills which would mitigate and avoid any short-term impacts.

Operation

Routine operation of the Project is not expected to affect American burying beetles or their habitat. Following construction, maintenance activities (e.g., vegetation management) along the ROW would not preclude the re-establishment of short-grass vegetation within both the temporary and permanent ROW.

Adverse effects to American burying beetle resulting from a crude oil spill from the pipeline are highly improbable due to: 1) the low probability of a spill, 2) the low probability of a spill coinciding with the presence of American burying beetles, and 3) the low probability of an American burying beetle contacting the spilled product (see **Appendix B**, Pipeline Risk Assessment and Environmental Consequence Analysis).

Lights associated with aboveground facilities, particularly if the lights emits wave lengths in the UV spectrum, which may attract American burying beetles, as they are known to be positively phototrophic. However, only one light above the pump station door would be used and in order for lights associated with the Project to impact this species, a population of American burying beetles would need to occur adjacent to one of the proposed locations of the aboveground facilities.

The activity period for the American burying beetle range wide is generally late April through September (USFWS 1991). Additionally, the active period of the American burying is associated with air temperature, with peak activity when nighttime temperatures are 60° F or greater at midnight. The American burying beetle overwinters as an adult by burrowing in soil (Schnell et al. 2008). Schnell et al. (2008) found that in Arkansas, surviving American burying beetles overwintered at an average depth of 6 cm (2.4 inches) with some as deep as 20 cm (6 inches). Heat from the pipeline typically increases soil temperature 6 inches below the surface between 5° and 8° F above background levels; greater differences occur between January and April, particularly in northern latitudes (TransCanada 2009). Early season temperature differences at northern latitudes are between 10° and 15° F directly over the pipeline compared to background levels (TransCanada 2009). Seasonal differences as a result of pipeline heat are not noticeable in Oklahoma and Texas (TransCanada 2009). Heat dissipation effects from the pipeline would be negligible for the American burying beetle because survival is more closely linked to access to carrion availability and the availability of the whole vertebrate carcass, than habitat structure (USFWS 2008a).

3.1.5.4 Cumulative Impacts

A review to identify non-federal projects or activities in the vicinity of the Project was completed by searching publicly available sources, internet news announcements, permit application filings, and agency provided information. No future state, local, or private actions that are reasonably certain to occur in the Project area have been identified for the Project. Pipeline projects evaluated for cumulative impacts within the EIS would all require one or more federal permits and would each be evaluated for potential impacts on listed species.

3.1.5.5 Conservation Measures

General conservation measures that have been discussed to avoid and minimize impacts to the American burying beetle include:

- Bait away and/or trap and relocate adult American burying beetle to remove them from the construction ROW.
- Setting up a compensatory mitigation plan for potential impacts to the American burying beetle by contributing to habitat conservation.
- State specific conservation measures for the American burying beetle have been recommended by respective USFWS offices and state resource agencies.

Additional surveys to determine the presence/absence of American burying beetles along the route in Nebraska were carried out in June and August 2009. No American burying beetles were found along the route, but if surveys on route changes indicate the presence of the beetle, Keystone would implement trap and relocate measures in those areas prior to construction activities.

The Pierre, South Dakota USFWS Field Office and SDGFP does not recommend trap and relocate procedures in South Dakota. According to the USFWS, recommended conservation measures for American burying beetle impacts include setting up a compensatory mitigation plan for potential impacts to the American burying beetles in Tripp County (AECOM 2009).

The USFWS Field Office in Tulsa, Oklahoma does not recommend trap and relocate procedures in Oklahoma. According to the USFWS, recommended conservation measures for American burying beetle impacts include setting up a compensatory mitigation plan for potential impacts to the American burying beetle in Oklahoma.

Surveys conducted in Lamar County Texas on the Gulf Coast Segment did not find any American burying beetle. However, if the route changes and future surveys indicate the presence of the beetle, bait away or trap and relocate efforts would be undertaken prior to construction activities.

3.1.5.6 Determination

<u>Effect on Critical Habitat</u>

Critical habitat has not been designated for the American burying beetle. Therefore, the Project would have “no effect” on critical habitat for the American burying beetle.

<u>Effect on the Species</u>

The Project “may affect, and is likely to adversely affect” the American burying beetle. This determination is based on the location of the Project within the known range and habitat of the American burying beetle and the results from surveys along the Steele City Segment, and Gulf Coast Segments of the Project. Even if trap and relocation efforts were to occur along the proposed construction ROW, the Project could result in the potential accidental loss of individuals from construction-related activities.

3.1.5.7 Literature Cited

AECOM. 2009. Personal communication between C. Bessken (USFWS) and P. Lorenz (AECOM). June 25, 2009.

Bauer, K., and J.C. Abbott. 2009. American Burying Beetle (Nicrophorus americanus) survey and habitat Assessment for the Keystone XL Project in Lamar county, Texas and Habitat Assessment for

Oklahoma. 2009 Report for AECOM, TransCanada and Permit TE172278-0 USFW. Cedar Park, Texas. (Appendix H).

Bedick J. C., B. C. Ratclife, W. W. Hoback and L. G. Higley. 1999. Distribution, ecology and population dynamics of the American burying beetle [*Nicrophorus americanus* Oliver (*Coleoptera*, *Silphidae*)] in south-central Nebraska, USA. Journal of Insect Conservation 3: 171-181.

Bishop, A. A., W. W. Hoback, M. Albrecht, and K. M. Skinner. 2002. GIS reveals niche partitioning by soil texture among carrion beetles. Transactions in GIS 6: 457-470.

ENSR Corporation (ENSR). 2008. Habitat Assessment for the Federally Endangered American Burying Beetle (Nicrophorus americanus) along the Steele city Segment of the Keystone XL Project Right-of-Way in Nebraska and South Dakota. Document No.: 10623-007. Prepared for Keystone Pipeline Project by ENSR Corporation. (Appendix D).

Federal Register. 1989. Endangered and Threatened Wildlife and Plants; Determination of Endangered Status for the American Burying Beetle. Final Rule. Federal Register 54(133):29652-29655.

Milne L. J. and M. J. Milne. 1976. The social behavior of burying beetles. Scientific American 235:84-89.

Peyton, M. 2003. Range and Population size of the American burying beetle (*Coleoptera: Silphidae*) in the dissected hills of south-central Nebraska. Great Plains Research Vol. 13, No.1, Spring 2003: pp.127-38.

Schnell, G.D., A.E. Hiott, J.C. Creighton, V.L. Smyth, and A. Komendat. 2008. Factors affecting overwinter survival of the American burying beetle, *Nicrophorus americanus* (Coleoptera: Silphidae). Journal of Insect Conservation 12:483-492.

TransCanada Keystone Pipeline, L.P. (TransCanada). 2009. TransCanada Keystone XL Project Environmental Report. Revised July 6, 2009. Document No.: 10623-006. Submitted to U.S. Department of State and Bureau of Land Management by TransCanada Keystone Pipeline, L.P.

US Fish and Wildlife Service (USFWS). 1991. American Burying Beetle (*Nicrophorus americanus*) Recovery Plan. Newton Corner, Massachusetts. 80 pp.

US Fish and Wildlife Service (USFWS). 2005. Conservation Approach for the American Burying Beetle (ABB) in Counties Lacking or with Limited Recent Survey Data. US Fish and Wildlife Service, Tulsa, Oklahoma. 4 pp.

US Fish and Wildlife Service (USFWS). 2008a. American burying beetle (*Nicrophorus americanus*). 5-Year Review: Summary and Evaluation. USFWS, Concord, New Hampshire. 53 pp.

US Fish and Wildlife Service (USFWS). 2008b. USFWS – Ecological Services, Arlington Field Office. Letter dated September 12, 2008.

3.1.6 Texas Prairie Dawn-Flower

3.1.6.1 Natural History and Habitat Association

The Texas prairie dawn-flower (*Hymenoxys texana*) was federally listed as endangered on March 13, 1986 (51 FR 8681). It also is listed as endangered in the state of Texas. The first recorded specimen collections were in 1889 and 1890 in Harris County, Texas, near the town of Hockley. No further sightings or specimen collections were recorded until 1981, when James Kessler rediscovered the flower north of Cypress, Texas. In the interim 90 years, the species was thought to be extinct. Since 1981, 21 populations have been found west

of Houston in Harris and Fort Bend counties, Texas. Additional populations have been found more recently on the northeast and southeast sides of Houston, as well as one population in Trinity County (Brown et al. 2007).

This species is found in small sparsely vegetated areas of fine-sandy compacted soil in seasonally wet depressions or saline swales. The bare spots are often associated with pimple (mima) mounds, but the species also can occur in areas where mima mounds have been leveled in the past. Other bare spots occupied by this species occur where soils have been severely disturbed in the past. These areas include abandoned rice fields, vacant or mowed lots, pastures, grasslands, open land, and existing ROWs. The bare spots are usually wet to moist during the cool months of winter and early spring, but they dry out to almost desert-like conditions during the hot summer. The Texas prairie dawn-flower escapes the desiccating summer conditions by completing their life cycles in the moist months of early spring (USFWS 1989).

Habitat destruction, primarily due to housing development and road construction in the Houston area, is the most serious threat to the long-term survival of this species. Disturbance of soils that eliminate the soil horizon are thought to be a severe threat to the species. The human population of Harris County is increasing rapidly, at an estimated 15.7 percent from 2000 to 2007 (US Census Bureau 2009). Such an influx of new residents creates a need for expansion and development into areas in which the Texas prairie dawn flower is known to occur, especially in the areas west and northwest of Houston in Harris and Fort Bend counties.

3.1.6.2 Potential Presence in Project Area

The only county that is crossed by the Project in which the Texas prairie dawn-flower is currently found in is Harris County, which is crossed by the Houston Lateral. The known populations in Harris County occur on the west, northwest, northeast, and southeast sides of Houston (USFWS 1989, 2009). The known populations on the west and northwest sides of Houston occur primarily in the Addicks and Barker Reservoirs, as well as other privately- and publically-owned property. These populations are found approximately 30 miles west of the western terminus of the Houston Lateral. The more recently located populations of the Texas prairie dawn-flower on the northeast and southeast sides of Houston occur as close as 15 miles from the ROW; however, there are no known historical occurrences in the ROW.

The environmental survey area in Harris County was reviewed for suitable habitat for this species based on a desktop review and publicly available data. Soil data (Soil Survey Geographic [SSURGO]) database was downloaded from the US Department of Agriculture (USDA) NRCS Soil Data Mart and land use information was interpreted from aerial imagery and desktop review. Soil map units described as fine-sandy soils, such as fine sandy loams, very fine sandy loams, loams, loamy fine sand, sand, or loamy prairie soils were included as areas of suitable habitat for the Texas prairie dawn-flower. Soil maps units that were not included as suitable habitat for this species included clays and clay loams. Land use types that were considered areas of suitable habitat for this species include open areas, such as open land, pastures, grasslands, existing ROWs, and vacant or mowed lots. Surveys were planned for areas within the 300-foot survey corridor where both suitable soil and land use types are present for the Texas prairie dawn-flower. The identified survey areas were transversed on foot in the spring of 2009 to document the presence/absences of the Texas prairie dawn-flower within the 300-foot survey corridor where access was granted. Surveyors focused on areas of prime habitat, including sparsely vegetated areas and flat areas surrounding mima mounds, if present.

A total of 139.6 acres of land within the environmental survey area that was identified as potential habitat for the Texas prairie dawn-flower. On April 15, 2009, 55.8 acres (40 percent) were surveyed for the presence or absence of the Texas prairie dawn-flower. No Texas prairie dawn-flowers were located within the surveyed area (**Appendix E**). Landowner permission to access the remaining 83.8 acres was not obtained for 2009. The 55.8 acres, initially identified as potentially containing suitable habitat, were found to contain low to no suitable habitat for the Texas prairie dawn-flower. The soils in these areas were loamy (Addicks loam, Bernard-Edna complex, or Verland silty clay loam) with a high clay component. The land use of the areas surveyed were either pastures that were frequently disturbed by cattle grazing or tall grasses.

3.1.6.3 Impact Evaluation

Construction

Based on preliminary surveys, the Texas prairie dawn-flower has not been observed in the ROW. Project construction could result in loss of habitat, altered habitat suitability, and introduction or spread of competing exotic invasive plants. The Texas prairie dawn-flower is a pioneering species which may be displaced by invasive plants. Prevention of the introduction and spread of noxious and invasive weeds are addressed in Keystone's CMP (**Appendix A**).

Operation

Normal routine operations are not likely to affect the Texas prairie dawn-flower. Control of exotic invasive plants are addressed in Keystone's CMP (**Appendix A**). In the unlikely event of a spill adverse effects to the Texas prairie dawn-flower are unlikely due to: 1) the low probability of a spill, 2) the low probability of a spill in suitable habitat for the Texas prairie dawn-flower, and 3) the low probability of the spill reaching habitat where the plant is present (See **Appendix B**, Pipeline Risk Assessment and Environmental Consequence Analysis).

According to Keystone's *Pipeline Temperature Effects Study*: pipeline heat may influence spring growth and production (TransCanada 2009). Positive effects of elevated soil temperature on plant emergence and production have been documented. Negative effects of elevated soil temperature on plant physiology have not been documented at the temperatures that would be generated by the pipeline. The limited number of studies that have been completed on the heat effects of pipelines on vegetation indicate neutral to positive effects. Accordingly, Keystone does not anticipate any significant overall effect to vegetation associated with heat generated by the operating pipeline.

The pipeline does have some effect on surrounding soil temperatures, primarily at pipeline depth. Surficial soil temperatures relevant to vegetation are impacted mainly by climate with negligible effect attributed to the operating pipeline. Therefore, there would be no affects of heat dissipation from the pipeline for the Texas prairie dawn-flower.

Power Lines and Substations

No powerlines are proposed to cross habitats in Harris County Texas, therefore there would be no impact of powerlines to the Texas prairie dawn-flower.

3.1.6.4 Cumulative Impacts

A review to identify non-federal projects or activities in the vicinity of the Project was completed by searching publicly available sources, internet news announcements, permit application filings, and agency provided information. No future federal, state, or local, or private actions that are reasonably certain to occur in the Project area have been identified for the Project. Pipeline projects evaluated for cumulative impacts within the EIS would all require one or more federal permits and would each be evaluated for potential impacts on listed species.

3.1.6.5 Conservation Measures

Conservation measure for identified populations could include:

- Reducing the width of the construction ROW in areas where populations have been identified, to the extent possible.
- Salvaging and segregating topsoil appropriately where populations have been identified to preserve native seed sources in the soil for use in re-vegetation efforts in the ROW.
- Restoring habitat by using an approved seed mix provided by the NRCS or appropriate state agency.

- Collecting seed to repopulate the ROW or an appropriate offsite location, or for creation of a nursery population until viable natural populations have established themselves.

Presence/absence surveys of the areas where access was previously denied are anticipated to occur in late March to mid-April in 2010 pending landowner access. The survey results would be submitted to the USFWS for review. If surveys identify the Texas prairie dawn-flower in the ROW, final conservation measures would be based on the quantity and quality of species presence and would be refined based on further consultation with the USFWS.

3.1.6.6 Determination

Effect on Critical Habitat

Critical habitat has not been designated for this species. Therefore, the Project would have "no effect" on critical habitat for the Texas prairie dawn-flower.

Effect on the Species

The Project "may affect, but is not likely to adversely affect" the Texas prairie dawn-flower. This determination is based on preliminary survey data that indicate that the species is not present within the Project construction area and Keystone's commitment to follow recommended mitigation measures of the USFWS. As a result no direct impacts would result from construction.

3.1.6.7 Literature Cited

Brown, L. E., E. L. Keith, D. J. Rosen, and J. Liggio. 2007. Notes on the flora of Texas with additions and other significant records. Journal of the Botanical Research Institute of Texas 1(2):1255-1264.

Federal Register. 1986. Endangered and Threatened Wildlife and Plants; Determination of Endangered Status for *Hymenoxys texana*. Final Rule. Federal Register 51(49):8681-8683.

TransCanada Keystone Pipeline, L.P. (TransCanada). 2009. TransCanada Keystone XL Project Environmental Report. Revised July 6, 2009. Document No.: 10623-006. Submitted to U.S. Department of State and Bureau of Land Management by TransCanada Keystone Pipeline, L.P.

US Census Bureau. 2009. U.S Census Bureau Data Finders. Internet website: http://www.census.gov. Accessed April 27, 2009.

US Fish and Wildlife Service (USFWS). 1989. *Hymenoxys texana* Recovery Plan. USFWS, Albuquerque, New Mexico. 53 pp. Internet website: http://ecos.fws.gov/docs/recovery_plan/900413a.pdf. Accessed April 22, 2009.

US Fish and Wildlife Service (USFWS). 2009. Rare Plants East Texas, Clear Lake Ecological Services Field Office. Internet website: http://www.fws.gov/southwest/clearlakees/PDF/TexasPrairieDawn.pdf. Accessed April 22, 2009.

3.2 Federally Threatened

3.2.1 Piping Plover

3.2.1.1 Natural History and Habitat Association

The piping plover (*Chardrius melodus*) was listed as endangered and threatened December 11, 1985 (50 FR 50726). Piping plover on the Great Lakes were listed as endangered, while the remaining Atlantic and Northern Great Plains populations were listed as threatened. Migrating and wintering populations of piping plover also were classified as threatened. Populations of piping plover within the Project area are considered to belong to the threatened Northern Great Plains population. The final rule designating critical habitat for the

Northern Great Plains breeding population of the piping plover (67 FR 57638) in Minnesota, Montana, Nebraska, North Dakota, and South Dakota has been vacated by the USFWS resulting in no currently designated critical habitat for this population of the piping plover crossed by the Project in Nebraska. Critical habitat for wintering piping plovers has been designated on the barrier islands outside of Galveston Bay, Texas (74 FR 23475), which is outside of the Project area.

Historically, piping plover bred across three geographic regions: 1) US and Canadian Northern Great Plains from Alberta to Manitoba south to Nebraska, 2) Great Lakes beaches, and 3) Atlantic coastal beaches from Newfoundland to North Carolina. Wintering areas are not well known, although wintering birds have been most often seen along the Gulf of Mexico, southern US Atlantic coastal beaches from North Carolina to Florida, eastern Mexico, and scattered Caribbean Islands (Haig 1986; USFWS 1988). The piping plover's current breeding range is similar except that breeding populations in the Great Lakes have almost disappeared (Haig and Plissner 1993).

Piping plover begin arriving on breeding grounds in mid-April, and most birds have arrived in the Northern Great Plains and initiate breeding behavior by mid-May (USFWS 1994). Populations that nest on the Missouri, Platte, Niobrara, and other rivers use beaches and dry barren sandbars in wide, open channel beds. Nesting habitat of inland populations consists of sparsely vegetated shorelines around small alkali lakes, large reservoir beaches, river islands and adjacent sandpits, and shorelines associated with industrial ponds (Haig and Plissner 1993). Vegetation cover is usually 25 percent or less (USFWS 1994). The piping plover would feed by probing the sand and mud for insects, small crustaceans, and other invertebrates in or near shallow water. This species feeds by alternating running and pausing to search for prey (Bent 1929).

Nests consist of shallow scrapes in the sand with the nest cup often lined with small pebbles or shell fragments. The nest is typically far from cover. Nesting piping plover have been found in least tern nesting colonies at a number of sites on Great Plains river sandbars and sand pits (USFWS 1994). Egg laying commences by the second or third week in May. The female generally chooses from several nest sites the male has constructed. Complete clutches contain three to four cryptically colored eggs (USFWS 1994). Incubation is shared by the male and female and averages 26 days. Incubation begins only after the last egg is laid and eggs typically hatch on the same day. Brooding duties also are shared by the male and female. Broods remain in nesting territories until they mature unless they are disturbed. Fledging takes approximately 21 to 35 days (USFWS 1994). If a nest fails or is destroyed, adults may re-nest up to four times (USFWS 1987). Breeding adults begin leaving nesting grounds as early as mid-July with the majority gone by the end of August (Wiens 1986, as cited in USFWS 1994).

Threats to piping plover nesting habitat include reservoirs, channelization of rivers, and modifications of river flows that have eliminated hundreds of kilometers of nesting habitat along Northern Great Plains' rivers (USFWS 1994). Eggs and young are vulnerable to predation and human disturbance, including recreational activities and off-road vehicle use. Human-caused disturbance to wintering habitats is also a threat to the continued existence of this species. Motorized and pedestrian recreational activities, shoreline stabilization projects, navigation projects, and development can degrade and eliminate suitable wintering habitat for this species.

3.2.1.2 Potential Presence in Project Area

Steele City Segment

Presence of breeding piping plovers along the Steele City Segment of the Project is restricted to Montana and Nebraska. During a meeting with Keystone representatives on June 10, 2008, SDGFP stated that breeding piping plovers are not located within the Project area. Potential breeding habitat within the Project area for the piping plover is restricted to sandy beaches and sandbars along the Platte, Loup, and Niobrara rivers in Nebraska and alkali wetlands in Valley County, Montana. According to the USFWS Billing Ecological Services Field Office, individual transient piping plovers may be observed along the Yellowstone River but there are no breeding records within the Project area (AECOM 2009).

Montana. Birds breeding in Valley County, Montana are found to breed on alkali lakes and wetlands (Atkinson et al. 2006; 67 FR 57638). Wetland and waterbody surveys conducted between May and November 2008 did not identify any suitable alkali wetlands for nesting piping plovers along the entire route in Valley County. Additional consultation with the USFWS Billing Ecological Services Field Office (AECOM 2009) indicates that historic surveys have failed to identify nesting piping plover within the Project area. Therefore, surveys are not recommended for the piping plover in Montana.

Nebraska. Birds breeding in Nebraska are found on sandbars and at commercial sand pits along three rivers crossed by the Project: Niobrara, Loup, and Platte rivers. These crossings were historically identified as critical habitat for the piping plover. Personal communication with the USFWS Grand Island, Nebraska Field Office in 2008 and 2009 indicated that designated critical habitat has been vacated in Nebraska and is no longer legally recognized as such (USFWS 2008).

Crossings of the Platte, Loup, and Niobrara rivers were surveyed by Keystone in July 2008 to confirm presence or absence of suitable breeding habitat and breeding piping plovers. The full report can be found in **Appendix C.** One individual foraging plover was identified at the Niobrara River crossing. No nesting piping plovers were identified within line-of-sight of the ROW crossing of the Platte or Loup rivers. **Table 3.2-1** summarizes the results of the occurrence surveys that were conducted at in Nebraska in 2008. Surveys would be repeated at these locations prior to construction to ensure that no nests have been built within 0.25 mile of the ROW.

Table 3.2-1 Results of the Piping Plover Nesting Surveys for the Steele City Segment of the Keystone XL Project

State	County	River	Survey Location	Habitat Assessment
Nebraska	Merrick/Hamilton	Platte River	North Bank	Good habitat; sandy beach with sparse vegetation
			Island	Poor habitat; dense vegetation
			South Bank	Poor habitat; vegetation to bank edge
Nebraska	Nance	Loup River	North Bank	Poor habitat; vegetation to bank edge
			Island	Excellent habitat; mudflats with sparse vegetation
Nebraska	Keya Paha/Rock	Niobrara River	South Bank	Good habitat; sandy shoreline with patches of sparse vegetation
			Island	Excellent habitat; sandbar with sparse vegetation
			North Bank	Poor habitat; vegetation to bank edge

Gulf Coast Segment

Piping plovers may be present throughout the Project area in Oklahoma and Texas when migrating to and from northern breeding grounds. The migration periods for the piping plover in Oklahoma and Texas are late February through mid-May and mid-July through September (66 FR 36038). The Tulsa Ecological Services Field Office recommended the identification of suitable habitat for migration stopovers by piping plovers. Areas of suitable habitat include sandy shorelines of lakes and rivers (Campbell 2003). Along the Gulf Coast Segment, these types of areas include the North Canadian River and South Canadian River in Oklahoma; the Red River at the Oklahoma/Texas state line; and the Bois D'Arc Creek, North Sulphur and Neches rivers in Texas. Along the Houston Lateral, these types of areas include the Trinity and San Jacinto rivers. Keystone currently is working with the USFWS to confirm the areas of suitable habitat for migration stop-overs. Critical habitat for the piping plover has been designated in Texas; however, no critical habitat would be crossed by the Project in Texas.

3.2.1.3 Impact Evaluation

Construction

The primary construction-related impacts would be disturbance and potential exposure to small fuel spills and leaks from construction machinery. The chance of construction-related spills during construction within piping plover habitat is minimal. According to Keystone's CMRP (**Appendix A**), "The Contractor shall not store hazardous materials, chemicals, fuels, lubricating oils, or perform concrete coating within 100 feet of any waterbody. The Contractor shall not refuel construction equipment within 100 feet of any waterbody. If the Contractor must refuel construction equipment within 100 feet of a waterbody, it must be done in accordance with the requirements outlined in Section 3 of the CMRP. All equipment maintenance and repairs would be performed in upland locations at least 100 feet from waterbodies and wetlands. All equipment parked overnight shall be at least 100 feet from a watercourse or wetland, if possible. Equipment shall not be washed in streams or wetlands."

All river crossings that provide suitable nesting habitat for the piping plover (Yellowstone, Cheyenne, Niobrara, Loup, and Platte, North Canadian, South Canadian, and Red Rivers) and migration stopover habitat in Oklahoma and Texas would be crossed using HDD, which poses a small risk of frac-out, or spills of drilling fluids. Drilling fluid spills are rare and are contained by the best management practices that are described within the HDD Contingency Plans required for drilling crossings. Most leaks of HDD drilling mud occur near the entry and exit locations for the drill and are quickly contained and cleaned up.

Steele City Segment

As indicated, the piping plover is known to nest within or near the Project at the Platte, Loup, and Niobrara rivers in Nebraska and Valley County alkali wetlands in Montana. No direct impacts to the piping plover or its breeding habitat would be anticipated at the Platte, Loup, and Niobrara rivers since pipeline placement across the rivers would be completed using the HDD method. Additionally, based on consultation with the USFWS, no impacts are anticipated along the Project route in Montana (AECOM 2009).

Indirect impacts could result from increased noise and human presence at work site locations if breeding plover are located within 0.25 mile of the Project. Prior to construction-related activities, including HDD and hydrostatic testing that would occur within 0.25 mile from potential breeding habitat, Keystone proposes to conduct presence/absence surveys up to 2 weeks prior to construction-related activities to identify active nest sites, in coordination with the USFWS. If occupied breeding territories and/or active nest sites are identified, the USFWS would be notified and appropriate protection measures would be implemented on a site-specific basis in coordination with the USFWS.

Impacts to piping plovers from temporary water reductions during hydrostatic testing in the lower Platte River Basin would be avoided, based on Keystone's plan to withdraw the volume of water needed at a rate less than 10 percent of the baseline daily flow and to return water back to its source within a 30-day period.

Gulf Coast Segment

No direct impacts to the piping plover or piping plover migration habitats are anticipated from the construction and operation of the Project in Oklahoma and Texas. The major rivers that contain suitable habitat for migration stopovers of the piping plover in Oklahoma and Texas would be crossed by HDD; and piping plover occurrence within or near the Project would likely be limited to individual or small flocks of migrant birds.

Indirect impacts could result from migrating individuals being flushed from the Project area during construction-related activities. Since piping plovers are highly mobile, it is anticipated that individuals would move to other suitable resting and foraging habitats within the Project region. If this species happened to land in close proximity to the construction ROW during construction, its presence would be documented. Based on the linear nature of the Project and mobility of migrating individuals, potential impacts from encountering and flushing a migrating piping plover from the Project area would be negligible. Habitat loss from construction would be negligible since the major river crossings would be crossed using the HDD method and any

disturbance adjacent to suitable riverine habitat would be allowed to completely revegetate following construction.

Operations

There are no known occurrences of piping plovers nesting within the Project area; therefore, indirect impacts during aerial and ground surveillance is unlikely to disturb nesting plovers in the Steele City Segment and during migration periods at stopover locations for the Gulf Coast Segment. However, aerial surveillance is conducted 26 times per year at intervals no greater than 3 weeks and the aircraft passes by an area quickly at an altitude of about 1,000 feet during those aerial patrols.

A spill resulting from a leak in the pipeline is unlikely to affect the piping plover. The major rivers that contain suitable habitat for migration stopovers of the piping plover in Oklahoma and Texas and breeding habitat in Nebraska would be crossed by HDD. In the unlikely event of a leak, the crude oil would need to penetrate a significant amount of overburden before reaching the river, thereby reducing the risk in some cases of crude oil reaching the river and thereby reducing the potential for piping plover exposure. Additionally, Some of the major rivers crossed by the Project which provide nesting or migration habitat for the piping plover are within or in close proximity to USDOT-designated High Consequence Areas and are subject to an intensive integrity management program stipulated by the USDOT (Integrity Management Rule, 49 CFR 195). Further, if a significant spill event were to occur, federal and state laws would require clean up.

Direct contact with a crude oil spill could result in adverse effects to piping plovers due to oiling of plumage, ingestion of crude oil from contaminated plumage and prey, and transfer of crude oil to eggs and young. While these exposure routes have the potential to cause adverse effects to individuals, the probability of adverse effects to piping plovers are unlikely due to: 1) the low probability of a spill, 2) the low probability of the spill coinciding with the presence of piping plover individuals, and 3) the low probability of the spill reaching a major river in sufficient amounts to cause toxic effects (see **Appendix B**, Pipeline Risk Assessment and Environmental Consequence Analysis). The magnitude of spill effects varies with multiple factors, the most significant of which include the amount of material released, the size of the spill dispersal area, the type of spills, the species assemblage present, climate, and the spill response tactics employed.

Lighting is not expected to affect the piping plover since only one bulb would be used at each pump station above the entry door, none of which are located closer than 5 miles to a river with suitable habitat. Communication towers would be below the height that requires lighting by the FAA, and below the height where guy wires would be required for tower stability.

All river crossings that provide suitable nesting habitat or migration stopover habitats would be crossed using HDD. There is limited information on the effects of pipeline temperatures in relation to surface water and wildlife. Because the depth of the pipeline is buried greater than 20 feet below the river bottom using the HDD construction method, temperature effects should be negligible. According to Keystone's *Pipeline Temperature Effects Study* (TransCanada 2009), the pipeline does have some effect on surrounding soil temperatures, but the burial depth under rivers crossed using HDD would avoid any temperature effects on potentially used habitats.

Power Lines and Substations

The construction of about 426 miles of new power lines to support the Project would add to the incremental collision mortality of migrant piping plovers, especially where these power lines are located near migration staging, nesting, or foraging habitats. Construction of new power line segments across nesting habitats, including rivers, gravel pits, alkali lakes, lake shorelines would also potentially increase predation from raptors by creating perches. The construction of a new electrical power line segment across the Platte River in Nebraska would incrementally increase the collision potential for foraging piping plovers in the Project area. Based on the 2008 habitat and occurrence surveys for this species at the Platte River crossing, breeding

habitat quality within line of sight of the Project centerline was considered to be of good quality. Protection measures could then be implemented by electrical service providers to minimize or prevent collision risk to foraging interior piping plovers at the Platte River crossing with the use of standard measures as outlined in *Mitigating Bird Collision with Power Lines* (APLIC 1994). Electrical power line providers would be responsible for obtaining the necessary approvals or authorizations from federal, state, and local governments. Keystone would advise electrical power providers of their ESA consultation requirement with the USFWS for the electrical infrastructure component of the Project to prevent impacts to migrating, nesting, or foraging piping plovers.

3.2.1.4 Cumulative Impacts

A review to identify non-federal projects or activities in the vicinity of the Project was completed by searching publicly available sources, internet news announcements, permit application filings, and agency provided information. No future state, local, or private actions that are reasonably certain to occur in the Project area have been identified for the Project. Pipeline projects evaluated for cumulative impacts within the EIS would all require one or more federal permits and would each be evaluated for potential impacts on listed species.

3.2.1.5 Conservation Measures

Steele City Segment

The following conservation measures would apply if construction-related activities, including HDD and hydrostatic testing, were to occur during the piping plover breeding season within suitable habitat:

- If construction were to occur during the plover breeding season (April 15 through August 15), Keystone would conduct pre-construction surveys within 0.25 mile from suitable breeding habitat at the Platte, Loup, and Niobrara rivers in Nebraska, no more than 2 weeks prior to construction.
- If occupied piping plover nests are found, then construction within 0.25 miles of the nest would be suspended until the fledglings have left the nest area.

Gulf Coast Segment

The following conservation measures, based on agency consultation would apply if construction-related activities, including HDD and hydrostatic tests, were to occur during the migration periods of the piping plover:

- The USFWS has recommended that if this species happens to land in close proximity to the construction ROW during construction, its presence would be documented.

3.2.1.6 Determination

Effect on Critical Habitat

Critical habitat designated for the Northern Great Plains population of the piping plover has been vacated by the USFWS. Critical habitat is not currently designated for this population. Critical habitat for wintering piping plovers on the barrier islands outside of Galveston Bay, Texas (74 FR 23475) are outside of the Project area. Therefore, the Project would have “no effect” on critical habitat for the piping plover.

Effect on the Species

The Project “may affect, but is not likely to adversely affect” the piping plover. This determination is based on Keystone’s construction plan to HDD the Platte, Loup, and Niobrara rivers, consultation with the USFWS, and Keystone’s commitment to follow recommended mitigation measures of the USFWS.

Although it is possible that a spill event could result in an adverse affect on this species, the probability of such an event would be unlikely due to: 1) the low probability of a spill, 2) low probability of a spill in a river reach where and when piping plovers are present, and 3) the low probability of the spill reaching a major river in sufficient amounts to cause toxic effects. In the unlikely event of a leak, the crude oil would need to penetrate a

significant amount of overburden before reaching the river, thereby reducing the risk in some cases of crude oil reaching the river and the potential for exposure.

3.2.1.7 Literature Cited

AECOM. 2009. Personal communication between L. Hanebury (USFWS) and P. Lorenz (AECOM). April 16, 2009.

Atkinson, S. J. and A. R. Dood. 2006. Montana Piping Plover Management Plan. Montana Department of Fish, Wildlife and Parks, Bozeman, Montana. 78 pp.

Bent, A. C. 1929. Life Histories of North American Shorebirds (Part II). US National Museum Bulletin 146. Washington, D.C.

Campbell, L. 2003. Endangered and Threatened Animals of Texas: Their Life History and Management. Internet website: http://www.tpwd.state.tx.us/huntwild/wild/species/endang/index.phtml. Accessed August 12, 2008.

Federal Register. 2009. Revised Designation of Critical Habitat for the Wintering Population of the Piping Plover (Charadrius melodus) in Texas. May 19, 2009. Federal Register 74:23475-23600.

Federal Register. 2002. Endangered and threatened wildlife and plants; designation of critical habitat for the Northern Great Plains breeding population of the piping plover. September 11, 2002. Final Rule. Federal Register 67(176):57638-57717.

Federal Register. 2001. Endangered and threatened wildlife and plants; final determinations of critical habitat for wintering piping plovers. July 10, 2001. Final Rule. Federal Register 66(132):36038-36086.

Federal Register. 1985. Endangered and Threatened Wildlife and Plants; Determination of Endangered and Threatened Status for Piping Plover. Final Rule. Federal Register 50:50726-50734.

Haig, S. M. 1986. Piping Plover Species Distribution. US Fish and Wildlife Service, Endangered Species Information System Workbook I.

Haig, S. M. and J. H. Plissner. 1993. Distribution and abundance of piping plover: results and implications of the 1991 census. Condor 95:145-156.

TransCanada Keystone Pipeline, L.P. (TransCanada). 2009. TransCanada Keystone XL Project Environmental Report. Revised July 6, 2009. Document No.: 10623-006. Submitted to U.S. Department of State and Bureau of Land Management by TransCanada Keystone Pipeline, L.P.

US Fish and Wildlife Service (USFWS). 1988. Recovery plan for piping plover breeding n the Great Lakes and Northern Great Plains. USFWS, Twin Cities, Minnesota. 160 pp.

US Fish and Wildlife Service (USFWS). 1987. Atlantic coast piping plover recovery plan. USFWS, Newton Corner, Massachusetts. 245 pp.

US Fish and Wildlife Service (USFWS). 1994. Draft revised recovery plan for piping plover, *Charadrius melodus*, breeding n the Great Lakes and Northern Great Plains of the United States. June 28, 1994. USFWS, Twin Cities, Minnesota. 85 pp. + appendices.

US Fish and Wildlife Service (USFWS). 2008. Meeting Notes. Fish, Wildlife and Sensitive Species Potentially Occurring along the Project Route in Nebraska. Correspondence between J. Cochnar (USFWS) and P. Lorenz (ENSR). May 5, 2008.

Wiens, T. P. 1986. Nest-site tenacity and mate retention in the piping plover. M.S. Thesis. University of Minnesota, Duluth. 34 pp.

3.2.2 Arkansas River Shiner

3.2.2.1 Natural History and Habitat Association

The Arkansas River shiner (*Notropis girardi*) was listed as threatened on November 23, 1998 (63 FR 64771). This listing was based on habitat destruction and modification from stream dewatering or depletions due to diversion of surface water and groundwater pumping, construction impoundments, and water quality degradation. Competition with the Red River shiner (*Notropis bairdi*) in the Cimarron River also has contributed to reduced distribution and abundance of Arkansas River shiner. Critical habitat has been designated for the Arkansas River shiner in the Cimarron River in Kansas and Oklahoma and the South Canadian River in Oklahoma (70 FR 59807).

The Arkansas River shiner inhabits the main channels of wide, shallow, sandy bottomed rivers and larger streams in the Arkansas River basin (Gilbert 1980). Adults usually are not usually found in quiet pools or backwaters (63 FR 64771). Studies by Polivka and Matthews (1997) in the South Canadian River indicated that this species used a broad range of microhabitat features. Microhabitat types such as bank, island, sand ridges, backwaters, midchannel, and pools were analyzed separately for abundance at all sampling locations. Bank habitat, islands, and sand ridges supported greater numbers of Arkansas River shiners than the other types. Sand was the predominant type of substrate in these microhabitats. Seasonally, adults selected bank and backwater areas in the winter and remained in islands and sand ridges during the fall, spring, and summer. In contrast, juveniles exhibited their highest numbers in backwaters; however, they also were abundant in bank and sand ridge habitats. The spawning period for the Arkansas River shiner occurs from June 1 through August 15 (NatureServe 2009). Spawning consists of pelagic, non-adhesive eggs that are broadcast and drift with the current during high flow periods. Hatching occurs within 1 or 2 days, with larvae capable of swimming within 3 or 4 days (63 FR 64771). Larvae seek out backwater pools and quiet water at the mouth of tributaries where food is more abundant (Moore 1944).

3.2.2.2 Potential Presence in the Project Area

Historically, the Arkansas River shiner inhabited the Arkansas, Cimarron, North Canadian, and South Canadian rivers in Oklahoma (63 FR 64771). The abundance of this species declined markedly after 1964. The Project crosses designated critical habitat for the Arkansas River shiner on the South Canadian River in Hughes County. The reach of critical habitat on the South Canadian River begins at State Highway 54 in Thomas, Oklahoma, and continues downstream to Indian Nation Turnpike northwest of McAlester, Oklahoma (70 FR 59807). The Arkansas River shiner is known to occur in the South Canadian River and has the potential to occur in the North Canadian River. Surveys for the Arkansas River shiner were not recommended in Oklahoma as the South Canadian River and North Canadian River are proposed to be crossed via HDD.

3.2.2.3 Impact Evaluation

<u>Construction</u>

The Project would cross both the North Canadian and South Canadian rivers in Oklahoma using the HDD method. As recommended by the USFWS, a buffer of 300 feet from bank full width would be maintained on each side of these rivers; however, because habitat is limited at the river crossings, Keystone is working with USFWS to verify appropriate buffers. Limited clearing of vegetation and limited human access would be required within this 300-foot zone in order to use the True Tracker Wire that is associated with the drilling equipment and in order to access these rivers to withdraw water for the Project's hydrostatic tests. The HDD entry and exit locations are outside the 300-foot buffer. The crossings of these rivers would be in compliance with the HDD Plan and Hydrostatic Test Plan (**Appendix F**). Consequently, no direct impacts to this species habitat is likely to occur from construction. HDD poses a small risk of frac-out, or spills of drilling fluids. Drilling fluid spills are rare and are contained by the best management practices that are described within the HDD

Contingency Plans required for drilling crossings. Most leaks of HDD drilling mud occur near the entry and exit locations for the drill and are quickly contained and cleaned up.

At streams and rivers crossed by the HDD method, a pump and hose would be placed in the waterbody to provide water to the HDD operation. The intake end of this pump would be screened using an appropriate mesh size to prevent entrainment or entrapment of larval fish or other aquatic organisms. The withdrawal rates for the pumps would be controlled, thus reducing the potential for entrainment or entrapment of aquatic species. The water withdrawals would take place in conjunction with the HDD operations and the combination of effective screening and water withdrawal rates would prevent direct impacts to the species.

Additionally, the North and South Canadian rivers have been identified as water sources to be used for hydrostatically testing the pipeline. During this testing process, a pump would be placed in or adjacent to the river for the duration of the water intake and filling period. The intake end of the pump would be screened to prevent entrainment of larval fish or debris. Once the pipeline is filled with water and pressure tested, the water would be returned to the same drainage where it was originally withdrawn. Care would be taken during the discharge to prevent erosion or scouring of the waterbody bed and banks.

Currently, water withdrawals for the HDD of the North and South Canadian Rivers and the hydrostatic test of this section of pipe are scheduled to occur between November 1, 2010 and April 13, 2011, which is prior to the Arkansas River shiner's spawning period (June 1 to August 15). Therefore, it is not expected that eggs or newly emerged Arkansas River shiner larvae would be present in the rivers during water withdrawal activities.

Operations

Routine pipeline operations are not expected to affect Arkansas River shiner. There would be no maintenance of vegetation within the designated critical habitat area along the South Canadian River, or within riparian habitats along the North Canadian River.

The area of the South Canadian River at and downstream of the Project's crossing location are within USDOT-designated High Consequence Areas and are subject to an intensive integrity management program stipulated by the USDOT (Integrity Management Rule, 49 CFR 195) and would be crossed using the HDD method. Consequently, the risk of a spill in these areas would be extremely unlikely, and this minimizes potential impacts to this species. Further, if a significant spill event were to occur, federal and state laws would require clean up. The North Canadian River and the South Canadian River and critical habitat associated with this river would be crossed using the HDD method. Therefore, the pipeline would be at a minimum of 20 feet below the surface for both rivers and throughout the critical habitat area. There is no potential for heat dissipated from the pipeline to affect the habitat at these river crossings.

In the unlikely event of a spill that would enter a river, exposure to crude oil could result in adverse toxicological effects to Arkansas River shiner. However, the probability of adverse effects to Arkansas River shiner are unlikely due to: 1) the extremely low probability of a spill, 2) the low probability of a spill in a river reach where the Arkansas River shiner or critical habitat is present, and 3) the low probability of the spill reaching a waterbody in sufficient amounts to cause toxic effects (see **Appendix B**, Pipeline Risk Assessment and Environmental Consequence Analysis).

3.2.2.4 Cumulative Impacts

A review to identify non-federal projects or activities in the vicinity of the Project was completed by searching publicly available sources, internet news announcements, permit application filings, and agency provided information. No future federal, state, or local, or private actions that are reasonably certain to occur in the Project area have been identified for the Project. Pipeline projects evaluated for cumulative impacts within the EIS would all require one or more federal permits and would each be evaluated for potential impacts on listed species.

3.2.2.5 Conservation Measures

The following conservation measures would apply to minimize impacts to the Arkansas River shiner if an HDD measure is not used at the North Canadian and South Canadian river crossings:

- Construction activities would be prohibited during the spawning period (June 1 through August 15) at the North Canadian and South Canadian river crossings unless a plan is developed in consultation with the USFWS that would minimize impacts to this species.
- Only a limited amount of clearing of vegetation would occur within the critical habitat area along the South Canadian River and the habitat along the North Canadian River.
- If the HDD crossing on this steam is unsuccessful and a different crossing method is required, the USFWS would be consulted with to determine the measures that would be implemented to avoid and minimize adverse impacts to this species. These measures could include salvage and relocation efforts in consultation with the USFWS.
- Erosion control measures would be implemented as described in the CMRP (**Appendix A**). Erosion and sediment controls would be monitored daily during construction to ensure effectiveness, particularly after storm events, and only the most effective techniques would be used.

3.2.2.6 Determination

Effect on Critical Habitat

The Project "may affect, but is not likely to adversely affect" designated critical habitat for the Arkansas River shiner at the South Canadian River crossing.

Effect on the Species

The Project "may affect, but is not likely to adversely affect" the Arkansas River shiner. This determination is based on Keystone's plan to HDD the South Canadian and North Canadian rivers, Keystone's commitment to only remove a minimal amount of vegetation at these rivers, and Keystone's commitment to follow recommended mitigation measures of the USFWS. As a result no direct or indirect impacts are likely to result from construction and operation of the Project.

Although it is possible that a spill event could result in an adverse affect on this species, the probability of such an event would be unlikely due to: 1) the low probability of a spill, 2) the low probability of a spill in a river reach where Arkansas River shiners are present, and 3) the low probability of the spill reaching a major river in sufficient amounts to cause toxic effects. The major rivers that contain Arkansas River shiner habitat would be crossed using the HDD method.

3.2.2.7 Literature Cited

Federal Register. 1998. Endangered and Threatened Wildlife and Plants; Final Rule to List the Arkansas River Basin Population of the Arkansas River Shiner (*Notropis girardi*) as Threatened. Final Rule. Federal Register 63(225):64771-64799.

Federal Register. 2005. Endangered and Threatened Wildlife and Plants; Final Designation of Critical Habitat for the Arkansas River Basin Population of the Arkansas River Shiner (*Notorpis girardi*); Final Rule. Federal Register 70(197): 59808-59846.

Gilbert, C. R. 1980. *Notropis girardi* Hubbs and Ortenburger Arkansas River Shiner. In: Lee, D. S.; C. R. Gilbert; H. Hocutt; R. E. Jenkins; D. E. McCallister; and J. R. Staufer. Atlas of North American Freshwater Fishes. North Carolina Biological Survey Publication No. 1980-12, North Carolina State Museum of Natural History, Raleigh, North Carolina. 854 pp.

Moore, G. A. 1944. Note on the Early Life History of *Notropis girardi*. Copeia 1944: 209-214.

NatureServe. 2009. NatureServe Explorer: An Online Encyclopedia of Life. Version 7.0. NatureServe, Arlington, Virginia. Internet website: http://www.natureserve.org/explorer. Accessed April 20, 2009.

Polivka, K. M. and W. J. Matthews. 1997. Habitat Requirements of the Arkansas River Shiner, *Notropis girardi*; August 1, 1994 - August 7, 1997. Final Report, Federal Aid Project No. E-33, Oklahoma Department of Wildlife Conservation, Oklahoma City, Oklahoma. 13 pp.

3.2.3 Western Prairie Fringed Orchid

3.2.3.1 Natural History and Habitat Association

The western prairie fringed orchid (*Platanthera praeclara*) was listed as federally threatened on September 28, 1989 (54 FR 39857). This plant is an erect, stout herbaceous perennial that occurred throughout the tallgrass prairies of southern Canada and the central US west of the Mississippi River (USFWS 1996; Sieg and King 1995). A 60 percent decline from documented historic levels is attributed to the conversion of much of the tallgrass prairie to agricultural land (USFWS 1996). The western prairie fringed orchid is presently known to occur in 6 states (Iowa, Kansas, Minnesota, Missouri, Nebraska, and North Dakota) and Manitoba, Canada; and appears to be extirpated from South Dakota and Oklahoma (USGS 2006; USFWS 1996). Most remaining populations are found in North Dakota and Minnesota, with about 3 percent of the populations found in the southern portion of this plants historic range (USFWS 1996).

Pollination appears to be dependent on a specific group of moths: hawkmoths (*Sphingidae*) (Phillips 2003; Sieg and King 1995; Sheviak and Bowles 1986). This relationship has been difficult to document (Phillips 2003). The long nectar spur of western prairie fringed orchid, the longest of any orchid in North America, requires its pollinators to have long enough tongues and widely spaced eyes to allow them to harvest the pollen (Phillips 2003). Based on historic documents, hawkmoths that may be possible pollinators include *Eumorpha acemon*, *Hyles lineata*, *Sphinx drupiferatum*, *S. kalmiae*, *Catacola* sp., *ceratomia undulosa*, and *Hyles galli* (USFWS 1996). While western prairie fringed orchid are pollinator-specific, the hawksmoths have other nectar sources (Phillips 2003; USFWS 1996). It is theorized that a lack of suitable pollinators could contribute to the observed low pollination rates which may affect the long-term survival of the western prairie fringed orchid (Phillips 2003).

The western prairie fringed orchid is most commonly found in moist, undisturbed mesic to wet calcareous prairies, sedge meadows and mesic swales (Phillips 2003; Sieg 1997; USFWS 1996). Populations of western prairie fringed orchids vary dramatically between wet and dry years, with increases in wet years, and decreases in dry years (Sieg and Wolken 1999). Soil moisture appears to be the most significant factor in the survival of individual orchids and the number of orchids flowering in a given year (USFWS 2007; Phillips 2003; Sieg 1997; Sieg and King 1995). Even though periodic fires and bison grazing were common in the historic ranges of western prairie fringed orchid (Sieg and Bjugstad 1994), it is unclear how these disturbances affected the species (USGS 2006).

The spread of invasive plants into prairie swales have had a negative effect on western prairie fringed orchid populations (Sieg 1997; USFWS 2007). Invasive plants which may displace the western prairie fringed orchid through competition include: leafy spurge (*Euphorbia esula*), Kentucky bluegrass (*Poa pratensis*), and Canada thistle (*Cirsium arvense*) (Sieg 1997; USFWS 2007). Other threats to the long-term survival of western prairie fringed orchid include the use of herbicides, heavy livestock grazing, early haying, habitat fragmentation, river channelization, siltation, and road and bridge construction (Minnesota Department of Natural Resources 2007; USGS 2006).

3.2.3.2 Potential Presence in Project Area

The western prairie fringed orchid is found in South Dakota, Nebraska, Kansas, and Oklahoma (NatureServe 2009). Known distribution of the species includes the entire Project area in Nebraska and south of Highway 18

in Tripp County in South Dakota (AECOM 2008; NGPC 2009). The Project is near known populations in Holt, Greeley, and Wheeler counties in Nebraska (USFWS 2009). Populations in South Dakota are possibly extirpated (NatureServe 2009), but factors that indicate the species could still be present include: 1) incomplete surveys in areas of suitable habitat crossed by the Project route on private lands, and 2) erratic flowering patterns with long dormancies that make detection difficult (Phillips 2003). Surveys to assess habitat suitability and occurrence of the western prairie fringed orchid were completed during June 2009 (**Appendix W**). A total of 74 sites over 95 miles of habitat were selected for surveys in Tripp County, South Dakota and throughout Nebraska based on input from federal and state agencies. Of these 74 sites, 60 were evaluated and 18 sites were determined to have high quality habitat with one population of western prairie fringed orchid documented along the ROW at MP 662 in Holt County, Nebraska. Additional surveys would be completed within the Project area in South Dakota and Nebraska in 2010 pending landowner permission to evaluate the remaining habitats for suitability and species occurrence.

3.2.3.3 Impact Evaluation

Construction

Construction of the pipeline could potentially disturb western prairie fringed orchid communities when vegetation is cleared and graded. Construction of permanent ancillary facilities also could displace plant communities for the lifetime of the Project. Revegetation of the pipeline could introduce or expand invasive species, especially leafy spurge, Kentucky bluegrass, and Canada thistle into the Project area, potentially contributing to the decline of western prairie fringed orchid. Keystone has developed weed and vegetation monitoring plans to prevent the spread of invasive species as a consequence of Project construction and operation. These plans are discussed in Sections 2.13 and 4.16 of the CMRP, respectively, and would be updated prior to construction.

Impacts to the western prairie fringed orchid or suitable habitats for this plant from temporary water reductions during hydrostatic testing in the lower Platte River Basin would be avoided, based on Keystone's plan to withdraw the volume of water needed at a rate less than 10 percent of the baseline daily flow and to return water back to its source within a 30-day period and the small volume of water to be used in comparison to total basin water flow.

Operations

Operation of the Project is not expected to result in impacts to the western prairie fringed orchid. Clearing of trees/shrubs in the ROW would be required for operational monitoring, but since this species inhabits open, native prairie, no tree or shrub clearing would occur within suitable habitat. If herbicides must be used for noxious weed control, application would be conducted by spot spraying. Populations of western prairie fringed orchid would be identified and no herbicides would be used at those locations.

Direct contact with a crude oil spill could result in adverse toxicological effects to western prairie fringed orchid. While these exposure routes have the potential to cause adverse effects, the probability of adverse effects to western prairie fringed orchid are unlikely due to: 1) the low probability of a spill, 2) the low probability of the spill coinciding with western prairie fringed orchid populations, and 3) the low probability of a spill reaching occupied habitats in sufficient amounts to cause toxic effects (see **Appendix B**, Pipeline Risk Assessment and Environmental Consequence Analysis).

According to Keystone's *Pipeline Temperature Effects Study* (TransCanada 2009): pipeline heat may influence spring growth and production. Positive effects of elevated soil temperature on plant emergence and production have been documented. Negative effects of elevated soil temperature on plant physiology have not been documented at the temperatures that would be generated by the pipeline. The limited number of studies that have been completed on the heat effects of pipelines on vegetation indicate neutral to positive effects. Accordingly, Keystone does not anticipate any significant overall effect to vegetation associated with heat generated by the operating pipeline. Surficial soil temperatures relevant to vegetation are impacted

mainly by climate with negligible effect attributed to the operating pipeline. Therefore, there would be no affects of heat dissipation from the pipeline for the Western Prairie Fringed Orchid.

Power Lines and Substations

The construction of new electrical power line segments could impact the western prairie fringed orchid if power line ROWs were to disturb potential habitat for this species. Protection measures that could be implemented by electrical service providers to prevent impacts to this species would be the same as described below under Conservation Measures. Electrical power line providers would be responsible for obtaining the necessary approvals or authorizations from federal, state, and local governments. Keystone would advise electrical power providers of their ESA consultation requirement with the USFWS for the electrical infrastructure components constructed for the Keystone XL Project to prevent impacts to the western prairie fringed orchid.

3.2.3.4 Cumulative Impacts

A review to identify non-federal projects or activities in the vicinity of the Project was completed by searching publicly available sources, internet news announcements, permit application filings, and agency provided information. No future state, or local, or private actions that are reasonably certain to occur in the Project area have been identified for the Project. Pipeline projects evaluated for cumulative impacts within the EIS would all require one or more federal permits and would each be evaluated for potential impacts on listed species.

3.2.3.5 Conservation Measures

Conservation measure for identified populations could include:

- Reducing the width of the construction ROW in areas where populations have been identified, to the extent possible.
- Salvaging and segregating topsoil appropriately where populations have been identified to preserve native seed sources in the soil for use in re-vegetation efforts in the ROW.
- Restoring habitat by using an approved seed mix provided by the NRCS or appropriate state agency.
- Collecting seed to repopulate the ROW or an appropriate offsite location, or for creation of a nursery population until viable natural populations have established themselves.

If surveys identify additional western prairie fringed orchid populations, Keystone would consult with the USFWS to determine appropriate measures. Other recommended conservation measures for populations of western prairie fringed orchid would be developed on a site-specific basis in consultation with the USFWS.

3.2.3.6 Determination

Effect on Critical Habitat

Critical habitat has not been designated for this species. Therefore, the Project would have “no effect” on critical habitat for the western prairie fringed orchid.

Effect on Species

The Project “may affect, but is not likely to adversely affect” the western prairie fringed orchid. This determination is based on the routes proximity to the extant western prairie fringed orchid range, the presence of an identified population and suitable habitat within the Project area, and Keystone’s commitment to follow recommended avoidance and conservation measures of the USFWS.

3.2.3.7 Literature Cited

AECOM. 2008. Personal communication between C. Bessken (USFWS) and P. Lorenz (AECOM). June 11, 2009.

Federal Register. 1989. Endangered and Threatened Wildlife and Plants; Determination of Threatened Status for Eastern and Western Prairie Fringed Orchids. Final Rule. Federal Register 54(187):39857-39863.

Minnesota Department of Natural Resources. 2007. Western Prairie Fringed Orchid A Threatened Midwestern Prairie Plant. Minnesota Department of Natural Resources. Internet website: http://files.dnr.state.mn.us/ natural_resources/ets/fringed_orchid.pdf. Accessed April 2007.

NatureServe. 2009. NatureServe Explorer: An online encyclopedia of life [web application]. Version 6.1. NatureServe, Arlington, Virginia. Internet website: http://www.natureserve.org/explorer. Accessed November 6, 2009).

Nebraska Game and Parks Commission (NGPC). 2009. Nebraska Natural Heritage Program. Range Maps for Threatened and Endangered Species. NGPC. February 25, 2009.

Phillips, L. 2003. Pollination of Western Prairie Fringed Orchid, *Platanthera praeclara*: Implications for Restoration and Management. Restoration and Reclamation Review Student On-Line Journal (Hort 5015/5071). University of Minnesota, St. Paul, Minnesota (USA) Department of Horticultural Science. Internet website: http://hort.agri.umn.edu/h5015/rrr.htm.

Sheviak, C. J. and M. L. Bowles. 1986. The prairie fringed orchids: a pollinator-isolated species pair. Rhodora 88:267-290.

Sieg, C. H. 1997. The mysteries of a prairie orchid. Endangered Species Bulletin. XXII(4): 12-13.

Sieg, C. H. and A. J. Bjugstad. 1994. Five years of following the western prairie fringed orchid (*Platanthera praeclara*) on the Sheyenne National Grassland, North Dakota. In: Wickett, Robert G.; Lewis, Patricia Dolan; Woodliffe, Allen; and Pratt, Paul, eds. Spirit of the land, our prairie legacy. Proceedings of the Thirteenth North American Prairie Conference; 1992 August 6-9; Windsor, Ontario, Canada. Windsor, Ontario, Canada: Department of Parks and Recreation: 141-146.

Sieg, C. H. and P. M. Wolken. 1999. Dynamics of a threatened orchid in flooded wetlands. In: Springer, Joseph T. ed. The central Nebraska loess hills prairie: Proceedings of the sixteenth North American Prairie Conference, 16:193-201.

Sieg, C. H. and R. M. King. 1995. Influence of Environmental Factors and Preliminary Demographic Analyses of a Threatened Orchid, *Platanthera praeclara*. American Midland Naturalist 134:307-323.

US Fish and Wildlife Service (USFWS). 2009. Internet website: http://www.fws.gov/midwest/endangered/ plants/index.html#westorchid. Accessed May 12, 2009.

_____. 2007. Western Prairie Fringed Orchid *Platanthera praeclara*. USFWS Mountain-Prairie Region South Dakota Ecological Services Field Office. Internet website: http://www.fws.gov/southdakotafieldoffice/ ORCHID.HTM. Accessed April 2007.

_____. 1996. Western Prairie Fringed Orchid Recovery Plan (*Platanthera praeclara*). USFWS. Fort Snelling, Minnesota. Vi + 101 pp.

US Geologic Service (USGS). 2006. North Dakota's Endangered and Threatened Species Western Prairie Fringed Orchid *Platanthera praeclara*. USGS Northern Prairie Wildlife Research Center. Internet website: http://www.npwrc.usgs.gov/resource/wildlife/endanger/platprae.htm. Accessed April 2007.

Appendices

Note: Appendices for the Biological Assessment are not included as the field survey reports contain specific location information that is confidential.