Volume 19
Appendix H, I, J, K, L

Keystone XL Project

Environmental Report

November 2008

TransCanada Keystone Pipeline, LP

Document No.: 10623-006

ConocoPhillips

TransCanada
In business to deliver

TransCanada Keystone XL Project

Environmental Report

Appendix G (Privileged and Confidently)

Submitted to the
Department of State
and
Bureau of Land Management

November 2008

Submitted by:

TransCanada Keystone Pipeline, LP

Document No.: 10623-006

Appendix H –

Pipeline Risk Assessment and Environmental Consequence Analysis

Pipeline Risk Assessment and Environmental Consequence Analysis is privileged and confidential.

Appendix I –

Construction, Mitigation, and Reclamation Plan

KEYSTONE XL PROJECT

CONSTRUCTION, MITIGATION, AND RECLAMATION PLAN

November 2008
Rev. 1

1.0 INTRODUCTION

2.0 GENERAL CONDITIONS
- 2.1 Training
- 2.2 Environmental Inspection
- 2.3 Advance Notice of Access to Property Prior to Construction
- 2.4 Other Notifications
- 2.5 Damages to Private Property
- 2.6 Appearance of Worksite
- 2.7 Access
- 2.8 Aboveground Facilities
- 2.9 Minimum Depth of Cover
- 2.10 Non-Hazardous Waste Disposal
- 2.11 Hazardous Wastes
- 2.12 Noise Control
- 2.13 Weed Control
- 2.14 Dust Control
- 2.15 Off Road Vehicle Control
- 2.16 Fire Prevention and Control
- 2.17 Road and Railroad Crossings
- 2.18 Adverse Weather
- 2.19 Cultural Resources

3.0 SPILL PREVENTION AND CONTAINMENT
- 3.1 Spill Prevention
  - 3.1.1 Staging Area
  - 3.1.2 Construction Right of Way
- 3.2 Contingency Plans
- 3.3 Equipment
- 3.4 Emergency Notification
- 3.5 Spill Containment and Countermeasures

4.0 UPLANDS (AGRICULTURAL, FOREST, PASTURE, RANGE AND GRASS LANDS)
- 4.1 Interference with Irrigation Systems
- 4.2 Clearing
- 4.3 Topsoil Removal and Storage
- 4.4 Grading
- 4.5 Temporary Erosion and Sediment Control
  - 4.5.1 General
  - 4.5.2 Sediment Barriers
  - 4.5.3 Trench Plugs
  - 4.5.4 Temporary Slope Breakers (Water Bars)
  - 4.5.5 Drainage Channels or Ditches
  - 4.5.6 Temporary Mulching
  - 4.5.7 Tackifier
- 4.6 Stringing

4.7 Trenching
4.7.1 Trench Dewater/Well Points
4.8 Welding, Field Joint Coating, and Lowering In
4.9 Padding and Backfilling
4.10 Clean Up
4.11 Reclamation and Revegetation
4.11.1 Relieving Compaction
4.11.2 Rock Removal
4.11.3 Soil Additives
4.11.4 Seeding
4.11.5 Permanent Erosion and Sediment Control
4.11.6 Fences
4.11.7 Farm Terraces
4.11.8 Right-of-Way and Pipeline Markers
4.12 Pasture and Range Lands
4.13 Forested Lands
4.14 Residential and Commercial/Industrial Areas
4.14.1 Residential and Commercial Areas
4.14.2 Site – Specific Plans
4.14.3 Landowner Complaint Resolution Procedure
4.15 Sand Hills Clean Up and Reclamation/Revegetation (Steele City Segment)
4.15.1 General
4.15.2 Right-of-Way Construction
4.15.3 Right-of-Way Reclamation
4.15.4 Post - Construction
4.16 Operations and Maintenance

5.0 DRAIN TILE SYSTEMS
5.1 General
5.2 Identification and Classification of Drain Tile Systems
5.2.1 Publicly Owned Drain Tiles
5.2.2 Privately Owned Drain Tiles
5.3 Mitigation of Damage to Drain Tile Systems
5.3.1 Non-interference with Drain Tile
5.3.2 Non-disturbance of Drain Tile Mains
5.3.3 Relocation or Replacement of Existing Drain Tiles Prior to Construction
5.3.4 Future Drain Tiles/Systems
5.3.5 Other Mitigation Measures
5.4 Responsibility for Repair of Drain Tile Systems
5.4.1 Local Drain Tile Contractor Repair
5.4.2 Pipeline Contractor Repair
5.4.3 Landowner/Tenant Repair
5.5 Drain Tile Repairs
5.5.1 Temporary Repairs During Construction
5.5.2 Permanent Repairs
5.6 Inspection/Acceptance of Drain Tile Repairs

6.0 WETLAND CROSSINGS
- 6.1 General
- 6.2 Easement and Workspace
- 6.3 Vehicle Access and Equipment Crossing
- 6.4 Temporary Erosion and Sediment Control
- 6.5 Wetland Crossing Procedures
  - 6.5.1 Dry Wetland Crossing Method
  - 6.5.2 Standard Wetland Crossing Method
  - 6.5.3 Flooded Push/Pull Wetland Crossing Method
- 6.6 Restoration and Reclamation

7.0 WATERBODIES AND RIPARIAN LANDS
- 7.1 General
- 7.2 Easement and Workspace
- 7.3 Vehicle Access and Equipment Crossings
- 7.4 Waterbody Crossing Methods
  - 7.4.1 Non-flowing Open Cut Crossing Method
  - 7.4.2 Flowing Open Cut Crossing Method of Minor, Intermediate, and Major Waterbodies
  - 7.4.3 Flowing Stream Crossing – Dry Flume Method
  - 7.4.4 Flowing Stream Crossing – Dry Dam and Pump Method
  - 7.4.5 Horizontal Directional Drill Crossings
  - 7.4.6 Horizontal Bore Crossings
- 7.5 Clearing
- 7.6 Grading
- 7.7 Temporary Erosion and Sediment Control
- 7.8 Trenching
- 7.9 Pipe Installation
- 7.10 Backfilling
- 7.11 Stabilization and Restoration of Stream Banks and Slopes

8.0 HYDROSTATIC TESTING
- 8.1 Testing Equipment Location
- 8.2 Test Water Source and Discharge Locations
- 8.3 Filling the Pipeline
- 8.4 Dewatering the Pipeline
  - 8.4.1 Splash Pup
  - 8.4.2 Splash Plate
  - 8.4.3 Plastic Liner
  - 8.4.4 Straw Bale Dewatering Structure

9.0 DRAWINGS AND FIGURES

Detail 1	Typical Silt Fence Barrier
Detail 2	Typical Straw or Hay Bale Barrier
Detail 3	Temporary/Permanent Slope Breaker Detail (Water Bars)
Detail 4	Erosion Control Matting Installation
Detail 5	Typical Dewatering Filter Bag
Detail 6	Typical Straw Bale Dewatering Structure
Detail 7	Typical Permanent Trench Breaker
Detail 8	”Dry” Wetland Crossing Method
Detail 9	Standard Wetland Crossing Method
Detail 10	Push/Pull Wetland Crossing Method
Detail 11	Typical Open Cut Wet Crossing Method Non-Flowing Waterbody
Detail 12	Typical Open Cut Wet Crossing Method Flowing Waterbody
Detail 13	Typical Dry Flume Crossing Method
Detail 13a	Typical Dry Flume Crossing Method (Procedures)
Detail 14	Typical Dam and Pump Crossing
Detail 14a	Typical Dam and Pump Crossing (Procedures)
Detail 15	Typical Horizontal Drill (HDD) Site Plan & Profile
Detail 16	Typical Temporary Bridge Crossing
Detail 17	Typical Flume Bridge Crossing
Detail 18	Typical Railcar Bridge Crossing
Detail 19	Flexible Channel Liner Installation
Detail 20	Typical Rock Rip-Rap
Detail 21	Typical Uncased/Railroad Crossing Bore Detail
Deail 22	(Omitted)
Detail 23	Streambank Reclamation – Log Wall
Detail 24	Streambank Reclamation – Vegetated Geotextile Installation
Detail 25	Typical ROW Layout/Soil Handling 110’ Construction ROW 50’ Easement Drain Tile Crossing
Detail 26	Header/Main Crossovers of Pipeline
Detail 27	Relocate/Replace Drainage Header/Main
Detail 28	Drainage and Irrigation Temporary Drain Tile Repair
Detail 29	Drainage and Irrigation Permanent Drain Tile Repair
Detail 30	Equipment Cleaning Station Detail
Detail 31	Equipment Wash Station Detail

1.0 INTRODUCTION

The construction, mitigation, and reclamation requirements described in this Plan apply to work on all of TransCanada Keystone Pipeline, L.P.'s (Keystone's) Keystone XL Project (Project) lands, including the following;

- uplands, including agricultural (cultivated or capable of being cultivated) lands, pasture lands; range lands; grass lands; forested lands; lands in residential, commercial, or industrial areas; lands in public rights of way; and lands in private rights-of-way;
- wetlands; and
- waterbodies and riparian areas.

Keystone, during the construction, operation, and maintenance of the Project, shall implement the construction, mitigation, and reclamation actions contained in this Plan to the extent that they do not conflict with the requirements of any applicable federal, state, or local rules and regulations, or other permits or approvals that are applicable to the Project. Additionally, Keystone may deviate from specific requirements of this Plan on specific private lands as agreed to by landowners or as required to suit actual site conditions as determined and directed by Keystone. All work must be in compliance with federal, state, and local permits.

The Project will be designed, constructed, operated and maintained in a manner that meets or exceeds applicable industry standards and regulatory requirements. Keystone's Integrity Management Plan and Emergency Response Plan outlines the preventative maintenance, inspection, line patrol, leak detection systems, SCADA, and other pipeline integrity management procedures to be implemented during operation of the Project.

2.0 GENERAL CONDITIONS

2.1 Training

Experienced, well-trained personnel are essential for the successful implementation of this Plan. Keystone and its Contractors shall undergo prevention and response, as well as safety training. The program shall be designed to improve awareness of safety requirements, pollution control laws and procedures, and proper operation and maintenance of equipment.

The construction contractor (Contractor), and all of his subcontractors shall ensure that persons engaged in Project construction are informed of the construction issues and concerns and that they attend and receive training regarding these requirements as well as all laws, rules and regulations applicable to the work. Prior to construction, all Project personnel will be trained on environmental permit requirements and environmental specifications, including fuel handling and storage, cultural resource protection methods, stream and wetland crossing requirements, and sensitive species protection measures.

Different levels of training shall be required for different groups of Contractor personnel. Contractor supervisors, managers, field foremen, and other Contractor personnel designated by Keystone shall attend a comprehensive environmental training session. All other Contractor personnel shall attend a training session before the beginning of construction and during construction as environmental issues and incidents warrant. Additional training sessions shall be held for newly assigned personnel prior to commencing work on the Project.

All Contractor personnel shall attend the training session prior to entering the construction right-of-way. All Contractor personnel shall sign an acknowledgement of having attended the appropriate level of training and shall display a hard hat sticker that signifies attendance at environmental training. In order to ensure successful compliance, Contractor personnel shall attend repeat or supplemental training if compliance is not satisfactory or as new, significant new issues arise.

All visitors and any other personnel without specific work assignments shall be required to attend a safety and environmental awareness orientation.

2.2 Environmental Inspection

Keystone will use Environmental Inspectors on each construction spread. The Environmental Inspectors will review the Project activities daily for compliance with state, federal and local regulatory requirements. The Environmental Inspectors will have the authority to stop specific tasks as approved by the Chief Inspector. They can also order corrective action in the event that construction activities violate the provisions of this Plan, landowner requirements, or any applicable permit requirements.

2.3 Advance Notice of Access to Property Prior to Construction

Prior to initially accessing landowners' property, Keystone shall provide the landowner or tenant with a minimum of 24 hours prior notice unless otherwise negotiated with the landowner and as described in the Project line list). Additionally, the landowner or tenant shall be provided with Keystone contact information. Landowners may utilize contact information to inform Keystone of any concerns related to construction.

Prior notice shall consist of a personal contact, a telephone contact, or delivery of written notice to the landowner to inform the landowner of whereby the landowner or tenant is informed of Keystone's intent to initially access the land. The landowner or tenant need not acknowledge receipt of written notice before Keystone can enter the landowner's property.

Keystone will coordinate with managers of public lands to reduce conflicts between construction activities and recreational uses. Keystone will consult with land managers on state and federal lands regarding any necessary construction and maintenance restrictions consistent with management and use of such lands. Damages from disruption of recreational uses of private lands will be the subject of compensation negotiations with individual landowners.

2.4 Other Notifications

The Contractor shall notify, in writing, both Keystone and the authority having jurisdiction over any road, railroad, canal, drainage ditch, river, foreign pipeline, or other utility to be crossed by the pipeline at least 48 hours (excluding Saturdays, Sundays, and statutory holidays), or as specified on the applicable permit(s), prior to commencement of pipeline construction, in order that the said authority may appoint an inspector to ensure that the crossing is constructed in a satisfactory manner.

The Contractor shall notify Keystone immediately of any spill of a potentially hazardous substance that creates a sheen on a wetland or waterbody, as well as any existing soil contamination discovered during construction.

The Contractor shall immediately notify Keystone of the discovery of previously unreported historic property, other significant cultural materials, or suspected human remains uncovered during pipeline construction.

The Contractor shall immediately notify Keystone of a Project-related injury to or mortality of a threatened or endangered animal.

2.5 Damages to Private Property

Pipeline construction activities shall be confined to the construction right-of-way, temporary work space, additional temporary work space, and approved access routes.

Keystone shall reasonably compensate landowners for any construction-related damages caused by Keystone which occur on or off of the established pipeline construction right-of-way.

Keystone shall reasonably compensate landowners for damages to private property caused by Keystone beyond the initial construction and reclamation of the pipeline, to include those damages caused by Keystone during future construction, operation, maintenance, and repairs relating to the pipeline.

2.6 Appearance of Worksite

The construction right-of-way shall be maintained in a clean, neat condition at all times. At no time shall litter be allowed to accumulate at any location on the construction right-of-way. The Contractor shall provide a daily garbage detail with each major construction crew to keep the construction right-of-way clear of trash, pipe banding and spacers, waste from coating products, welding rods, timber skids, defective materials and all construction and other debris immediately behind construction operations unless otherwise approved by Keystone. Paper from wrapping or coating products or lightweight items shall not be permitted to be scattered by the wind.

The traveled surfaces of roads, streets, highways, etc. (and railroads when applicable) shall be cleaned free of mud, dirt, or any debris deposited by equipment traversing these roads or exiting from the construction right-of-way.

2.7 Access

Prior to the pipeline's installation, Keystone and the landowner shall reach a mutually acceptable agreement on the route that shall be utilized by the Contractor for entering and exiting the pipeline construction right-of-way should access to the construction right-of-way not be practicable or feasible from adjacent segments of the pipeline construction right-of-way, public road, or railroad right-of-way.

All construction vehicles and equipment traffic shall be confined to the public roads, private roads acquired for use by Keystone, and the construction right-of-way. If temporary private access roads are constructed, they shall be designed to maintain proper drainage and shall be built to minimize soil erosion.

Sufficiently sized gaps shall be left in all spoil and topsoil wind rows and a hard or soft plug shall be left in the trench at all temporary private access roads and obvious livestock or wildlife trails unless the landowner agrees prior to construction that these access points can be blocked during construction.

All construction-related private roads and access points to the right-of-way shall be marked with signs. Any private roads not to be utilized during construction shall also be marked.

Keystone will develop a site-specific crossing plan for the Corps Fee Title Lands to address the primary concerns of limited access and conflicts with hunters during construction.

2.8 Aboveground Facilities

Locations for aboveground facilities shall be selected in a manner so as to be as unobtrusive as reasonably possible to ongoing agricultural or other landowner activities occurring on the lands adjacent to the facilities. If it is not feasible, to avoid interference, such activities shall be located so as to incur the least hindrance to the adjacent agricultural operations (i.e., located in field corners or areas where at least one side is not used for cropping purposes) provided the location is consistent with the design constraints of the pipeline. Aboveground facilities shall avoid floodplains and wetlands to the maximum extent possible. Additionally, they shall be located to avoid existing drain tile systems to the extent possible. To further reduce visual impacts from aboveground pipeline facilities and structures, Keystone will comply with standard industry painting practices with respect to aboveground facilities. Keystone will address any visual aesthetics issues with landowners in individual consultations.

2.9 Minimum Depth of Cover

The pipeline shall be installed so that the top of the pipe and coating is a minimum depth of 5 feet below the bottom of waterbodies including rivers, creeks, streams, ditches, and drains. This depth shall normally be maintained over a distance of 15 feet on each side of the waterbody measured from the top of the defined stream channel. If concrete weights or concrete coated pipe is utilized for negative buoyancy of the pipeline, the minimum depth of cover shall

be measured from the top of the concrete to the original ground contour. The following table indicates standard depths that would apply to pipeline construction.

Location	Normal Excavation (inches)	For Rock Excavation (inches
Most areas	48	36
All waterbodies	60	36
Dry creeks, ditches, drains, washes, gullies, etc.	60	36
Drainage ditches at public roads and railroads	60	48

Depth of cover requirements may be modified by Keystone based on site-specific conditions. However, all depths shall be in compliance with all established codes.

2.10 Non-Hazardous Waste Disposal

Non-hazardous pipeline construction wastes include human waste, trash, pipe banding and spacers, waste from coating products, welding rods, timber skids, cleared vegetation, stumps, and rock.

All waste which contains (or at any time contained) oil, grease, solvents, or other petroleum products falls within the scope of the oil and hazardous substances control, cleanup, and disposal procedures. This material shall be segregated for handling and disposal as hazardous wastes.

The Contractor shall be responsible for ensuring that human wastes are handled and disposed of exclusively by means of portable, self-contained toilets during all construction operations. Wastes from these units shall be collected by a licensed contractor for disposal only at licensed and approved facilities.

The Contractor shall remove all trash from the construction right-of-way on a daily basis unless otherwise approved or directed by Keystone.

The Contractor shall dispose of HDD drill cuttings and drilling mud at a Keystone-approved location. Disposal options may include spreading over the construction right-of-way in an upland location approved by Keystone, or hauling to an approved licensed landfill or other site approved by Keystone.

The Contractor shall remove all extraneous vegetative, rock, and other natural debris from the construction right-of-way by the completion of cleanup

The Contractor shall remove all trash and wastes from Contractor yards, and Pipe Stockpipe Sites, and staging areas when work is completed at each location.

The Contractor shall dispose of all waste materials at licensed waste disposal facilities. Wastes shall not be disposed of in any other fashion such as un-permitted burying or burning.

2.11 Hazardous Wastes

The Contractor shall ensure that all hazardous and potentially hazardous materials are transported, stored, and handled in accordance with all applicable legislation. Workers exposed to or required to handle dangerous materials shall be trained in accordance with the applicable regulator and the manufacturer's recommendations.

The Contractor shall dispose of all hazardous materials at licensed waste disposal facilities. Hazardous wastes shall not be disposed of in any other fashion such as un-permitted burying or burning.

All transporters of oil, hazardous substances, and hazardous wastes shall be licensed and certified according to the applicable state vehicle code. Incidents on public highways shall be reported to the appropriate agencies.

All hazardous wastes being transported off-site shall be manifested. The manifest shall conform to requirements of the appropriate state agency. The transporter shall be licensed and certified to handle hazardous wastes on the public highways. The vehicles as well as the drivers must conform to all applicable vehicle codes for transporting hazardous wastes. The manifest shall conform to 49 CFR Parts 172.101, 172.202, and 172.203.

If toxic or hazardous waste materials or containers are encountered during construction, the Contractor shall stop work immediately to prevent disturbing or further disturbing the waste material and shall immediately notify Keystone. The Contractor shall not restart work until clearance is granted by Keystone.

2.12 Noise Control

The Contractor shall minimize noise during non-daylight hours and within 1 mile of residences or other noise-sensitive areas such as hospitals, motels or campgrounds. Keystone shall abide by all applicable noise regulations regarding noise near residential and commercial/industrial areas. The Contractor shall provide notice to Keystone if noise levels are expected to exceed bylaws for a short duration. Keystone will give advanced notice to landowners within 500 feet of right-of-way prior to construction, limit the hours during which construction activities with high-decibel noise levels are conducted, coordinate work schedules, and ensure that construction proceeds quickly through such areas. The Contractor shall minimize noise in the immediate vicinity of herds of livestock or poultry operations, which are particularly sensitive to noise.

Keystone will set up a toll-free telephone line for landowners to report any construction noise-related issues.

2.13 Weed Control

Prior to mobilization for the Project, the Contractor shall thoroughly clean all construction equipment, including timber mats, prior to moving the equipment to the job site to limit the potential for the spread of noxious weeds, insects and soil-

borne pests. The Contractor shall clean the equipment with high-pressure washing equipment.

Prior to construction, Keystone will mark all areas of the right-of-way which contain infestations of noxious, invasive species or soil-borne pests. Such marking will clearly indicate the limits of the infestation along the right-of-way. During construction, the Contractor shall clean the tracks, tires, and blades of equipment by hand (track shovel) or compressed air to remove excess soil prior to movement of equipment out of weed or soil-borne pest infested areas or utilize cleaning stations to remove vegetative materials using water under high pressure (see detail Drawings 30 and 31).

In areas of isolated weed populations, the Contractor shall strip topsoil from the full width of the construction right-of-way and store the topsoil separately from other topsoil and subsoil. The Environmental Inspectors will identify these locations in the field prior to grading activities.

The Contractor shall use mulch and straw or hay bales that are free of noxious weeds for temporary erosion and sediment control.

The Contractor shall implement pre-construction treatments such as mowing prior to seed development or herbicide application to areas of noxious weed infestation prior to other clearing, grading, trenching, or other soil disturbing work at locations identified in the construction drawings.

Keystone will implement Best Management Practices (BMPs) for conducting vegetation control where necessary before and after construction. Typical agricultural herbicides, developed in consultation with county or state regulatory agencies, will be used. Herbicide types will be determined based on the weed species requiring control. The Contractor shall apply herbicides, where required, within one week, or as deemed necessary for optimum mortality success, prior to disturbing the area by clearing, grading, trenching, or other soil disturbing work. Herbicides shall be applied by applicators appropriately licensed or certified by the state in which the work is conducted. All herbicides applied prior to construction shall be non-residual or shall have a significant residual effect no longer than 30 days. Herbicides applied during construction shall be non-residual. Keystone will implement BMPs in the use of pesticides and herbicides along the pipeline corridor to reduce potential impacts to avian and wildlife species.

The Contractor shall not use herbicides in or within 100 feet of a wetland or waterbody.

After pipeline construction, on any construction right-of-way over which Keystone will retain control over the surface use of the land after construction (i.e., valve sites, metering stations, pump stations, etc.), Keystone shall provide for weed control to limit the potential for the spread of weeds onto adjacent lands used for agricultural purposes. Any weed control spraying performed by Keystone shall be done by a state-licensed pesticide applicator.

Keystone shall be responsible for reimbursing all reasonable costs incurred by owners of land adjacent to aboveground facilities when the landowners must control weeds on their land which can be reasonably determined to have spread from land occupied by Keystone's aboveground facilities.

2.14 Dust Control

The Contractor shall at all time control airborne dust levels during construction activities to levels acceptable to Keystone. The Contractor shall employ water trucks, sprinklers or calcium chloride as necessary to reduce dust to acceptable levels. Utilization of calcium chloride is limited to roads.

Dust shall be strictly controlled where the work approaches dwellings, farm buildings, and other areas occupied by people and when the pipeline parallels an existing road or highway. This shall also apply to access roads where dust raised by construction vehicles may irritate or inconvenience local residents. The speed of all Contractor vehicles shall be controlled in these areas. Emissions from construction equipment combustion, open burning, and temporary fuel transfer systems and associated tanks will be controlled to the extent required by state and local agencies through the permit process.

The Contractor shall take appropriate precautions to prevent fugitive emissions caused by sand blasting from reaching any residence or public building. The Contractor shall place curtains of suitable material, as necessary, to prevent wind-blown particles from sand blasting operations from reaching any residence or public building.

Additional measures may be required by state regulations or local ordinances. The Contractor will comply with all applicable state regulations and local ordinances with respect to truck transportation and fugitive dust emissions.

2.15 Off Road Vehicle Control

Keystone shall offer to landowners or managers of forested lands to install and maintain measures to control unauthorized vehicle access to the construction right-of-way where appropriate. These measures may include the following unless otherwise approved or directed by Keystone based on site specific conditions or circumstances:

- signs;
- fences with locking gates;
- slash and timber barriers, pipe barriers, or boulders lined across the construction right-of-way; and
- conifers or other appropriate trees or shrubs across the construction right-of-way.

2.16 Fire Prevention and Control

The Contractor shall comply with all federal, state, county and local fire regulations pertaining to burning permits and the prevention of uncontrolled fires. The following mitigative measures shall be implemented to prevent fire hazards and control of fires:

- A list of relevant fire authorities and their designated representative to contact shall be maintained on site by construction personnel.
- Adequate fire fighting equipment shall be available on site in accordance with the applicable regulatory requirements shall be available on site.
- The level of forest fire hazard shall be posted at the construction office (where visible for workers) and workers shall be made aware of the hazard level and related implications.
- The Contractor shall provide equipment to handle any possible fire emergency. This shall include, although not be limited to, water trucks; portable water pumps; chemical fire extinguishers; hand tools such as shovels, axes, and chain saws; and heavy equipment adequate for the construction of fire breaks when needed.
- Specifically, the Contractor shall supply and maintain in working order an adequate supply of fire extinguishers for each crew engaged in potentially combustible work such as welding, cutting, grinding, and burning of brush or vegetative debris.
- In the event of a fire, the Contractor shall immediately use resources necessary to contain the fire. The Contractor shall then notify local emergency response personnel.
- All tree clearing activities are to be carried out in accordance with local rules and regulations for the prevention of forest fires.
- Burning shall be done in compliance with state, county, or local applicable regulations.
- Any burning will be done within the right-of-way. Only small piles shall be burned to avoid overheating or damage to trees or other structures along the right-of-way.
- Flammable wastes shall be removed from the construction site on a regular basis.
- Flammable materials kept on the construction site must be stored in approved containers away from ignition sources.
- Smoking shall be prohibited around flammable materials.
- Smoking shall be prohibited on the entire construction site when the fire hazard is high.

2.17 Road and Railroad Crossings

Construction across paved roads, highways, and railroads will be in accordance with the requirements of the road and railroad crossing permits and approvals

obtained by Keystone. In general, all major paved roads, all primary gravel roads, highways, and railroads will be crossed by boring beneath the road or railroad. Detail drawing 21 illustrates a typical bored road or railroad crossing. Boring requires the excavation of a pit on each side of the feature, the placement of boring equipment in the pit, and boring a hole under the road at least equal to the diameter of the pipe. Once the hole is bored, a prefabricated pipe section will be pulled through the borehole. For long crossings, sections can be welded onto the pipe string just before being pulled through the borehole. Boring will result in minimal or no disruption to traffic at road or railroad crossings. Each boring will be expected to take 1 to 2 days for most roads and railroads and up to 10 days for long crossings such as interstate or four-lane highways.

Most smaller, unpaved roads and driveways will be crossed using the open-cut method where permitted by local authorities or private owners. The open-cut method will require temporary closure of the road to traffic and establishment of detours. If no reasonable detour is feasible, at least one lane of traffic will be kept open, except during brief periods when it is essential to close the road to install the pipeline. Most open-cut road crossings can be finished and the road resurfaced in 1 or 2 days. Keystone will take measures, such as posting signs at open-cut road crossings, to ensure safety and minimize traffic disruptions.

2.18 Adverse Weather

The Contractor shall restrict certain construction activities and work in cultivated agricultural areas in excessively wet soil conditions to minimize rutting and soil compaction. In determining when or where construction activities should be restricted or suspended during wet conditions, the Contractor shall consider the following factors:

- the extent that rutting may cause mixing of topsoil with subsoil layers or damage to tile drains;
- excessive buildup of mud on tires and cleats;
- excessive ponding of water at the soil surface; and
- the potential for excessive soil compaction.

The Contractor shall implement mitigative measures as directed by Keystone in order to minimize rutting and soil compaction in excessively wet soil conditions which may include:

- restricting work to areas on the spread where conditions allow;
- using low ground weight, wide-track equipment, or other low impact construction techniques;
- limiting work to areas that have adequately drained soils or have a cover of vegetation ,such as sod, crops or crop residues, sufficient to prevent mixing of topsoil with subsoil layers or damage to drain tiles; and
- installing geotextile material or construction mats in problem areas.

"Stop work" authority will be designated to the chief inspector but will be implemented when recommended by the Environmental Inspector.

2.19 Cultural Resources

Keystone intends to avoid cultural resources to the extent practicable by rerouting the pipeline corridor and related appurtenances, avoiding construction activities on properties listed in or eligible for listing in the National Register of Historic Places (NRHP), as well as boring or using HDD through culturally sterile soils.

The Contractor shall implement the measures outlined in any unanticipated discovery plan or any Programmatic Agreement that is adopted to minimize disturbance to cultural sites and shall take immediate action as outlined in the Programmatic Agreement if any unanticipated cultural discovery is encountered during construction.

The preferred treatment of any historical property or culturally significant site is avoidance. Where necessary, Keystone will monitor the construction spread using a cultural resource monitor working under the direction of a professional who meets the standards of the *Secretary of the Interior's Historic Preservation Professional Qualification Standards* (48 FR 44716, September 29, 1983).

Prior to commencing construction, Keystone also will provide an appropriate level of training to all construction personnel so that the requirements of any unanticipated discovery plan or Programmatic Agreement are understood and unanticipated discoveries quickly identified.

In the event an unanticipated cultural discovery is made, the Contractor will immediately halt all construction activities within a 100-foot radius, including traffic; notify the Keystone Environmental Inspector; and implement interim measures to protect the discovery from looting or vandalism. The appropriate federal, state, local, or tribal authorities will be notified of discovery within 48 hours of the initial find. Construction will not proceed within the 100-foot radius of discovery site until all mitigation measures defined in the Programmatic Agreement are concluded and Keystone receives approval from the appropriate agencies that construction may resume. No work or activity within the 100-foot buffer area may take place until approvals are communicated at the spread level by the lead Environmental Inspector.

3.0 SPILL PREVENTION AND CONTAINMENT

Spill prevention and containment applies to the use and management of hazardous materials on the construction right-of-way and all ancillary areas during construction. This includes the refueling or servicing of all equipment with diesel fuel, gasoline, lubricating oils, grease, and hydraulic and other fluids during normal upland applications and special applications within 100 feet of perennial streams or wetlands.

Keystone will prepare a project-specific Spill Prevention Containment and Countermeasure (SPCC) Plan. The Contractor shall provide additional information to complete the SPCC Plan for each construction spread, and shall provide site-specific

data that meets the requirements of 40 CFR Part 112 for every location used for staging fuel or oil storage tanks and for every location used for bulk fuel or oil transfer. Each SPCC Plan will be prepared prior to introducing the subject fuel, oil, or hazardous material to the subject location.

3.1 Spill Prevention

3.1.1 Staging Areas

Staging areas (including Contractor yards and pipe stockpile sites) shall be set up for each construction spread. Bulk fuel and storage tanks will be placed only at Contractor yards. No bulk fuel and storage tanks will be placed in the construction ROW. Hazardous materials at staging areas shall be stored in compliance with federal and state laws. The following spill prevention measures shall be implemented by the Contractor:

- Contractor fuel trucks shall be loaded at existing bulk fuel dealerships or from bulk tanks set up for that purpose at the staging area. In the former case, the bulk dealer is responsible for preventing and controlling spills.
- The Environmental Inspector shall inspect the tank site for compliance with the 100-foot setback requirement and approve the tank site prior to installing bulk fuel or storage tanks on the construction yard.
- Fuels and lubricants shall be stored only at designated staging areas. Storage of fuel and lubricants in the staging area shall be at least 100 feet away from the water's edge. Refueling and lubrication of equipment shall be restricted to upland areas at least 100 feet away from perennial streams and wetlands.
- Contractors shall be required to perform all routine equipment maintenance at the staging area and recover and dispose of wastes in an appropriate manner.
- Fixed fuel dispensing locations will be provided with secondary containment to capture fuel from leaks, drips, and overfills.
- Temporary liners, berms, or dikes (secondary containment) shall be constructed around the aboveground bulk tanks, providing 110 percent containment volume of the largest storage tank or trailer within the containment structure, so that potential spill materials shall be contained and collected in specified areas. Tanks shall not be placed in areas subject to periodic flooding or washout.
- Drivers of tank trucks are responsible for safety and spill prevention during tank truck unloading. Procedures for loading and unloading tank trucks shall meet the minimum requirements established by the Department of Transportation.
- Drivers of tank trucks are responsible for setting brakes and chocking wheels prior to off loading. Warning signs requiring drivers to set brakes and chock wheels shall be displayed at all tanks. Proper

grounding of equipment shall be undertaken during fuel transfer operations. Drivers shall observe and control the fueling operations at all times to prevent overfilling the temporary tank.

- Prior to departure of any tank truck, all vehicle outlets shall be examined closely by the driver for leakage, tightened, adjusted or replaced to prevent leakage while in transit.
- A supply of sorbent and barrier materials sufficient to allow the rapid containment and recovery of spills shall be maintained at each construction staging area. Sorbent and barrier materials shall also be utilized to contain runoff from contaminated areas.
- Shovels and drums shall be kept at each of the individual staging areas. In the event that small quantities of soil become contaminated, shovels shall be utilized to collect the soil and the material shall be stored in 55-gallon drums. Large quantities of contaminated soil may be bio-remediated on site or disposed in an approved landfill, subject to government approval, or collected utilizing heavy equipment, and stored in drums or other suitable containers prior to disposal. Should contamination occur adjacent to staging areas as a result of runoff, shovels or heavy equipment shall be utilized to collect the contaminated material. Contaminated soil shall be disposed of in accordance with state and federal regulations.
- Temporary aboveground tanks shall be subject to visual inspection on a monthly basis and when the tank is refilled. Inspection records shall be maintained. Operators shall routinely keep tanks under close surveillance and potential leaks or spills shall be quickly detected.
- Visible fuel leaks shall be reported to the Contractors' designated representative and corrected as soon as conditions warrant. Keystone's designated representative shall be informed.
- Drain valves on temporary tanks shall be locked to prevent accidental or unauthorized discharges from the tank.
- Oil and other hazardous materials stored in 350-gallon totes, 55-gallon drums, 5-gallon pails, smaller retail-size containers or other portable containers will be staged or stored in areas with a secondary temporary containment structure. Secondary containment structures may consist of temporary earthen berms with a chemical resistant liner, or a portable containment system constructed of steel, PVC, or other suitable material. The secondary containment structure will be capable of containing 110 percent of the volume of material stored in these areas.

Keystone may allow modification of the above specifications as necessary to accommodate specific situations or procedures. Any modifications must comply with all applicable regulations and permits.

3.1.2 Construction Right-of-Way

The Contractor will ensure that all equipment is free of leaks prior to use on the Project and prior to entering or working in or near waterbodies or wetlands. Throughout construction, the Contractor will conduct regular maintenance and inspections of the equipment to reduce the potential for spills or leaks.

Rubber-tired vehicles (pickup trucks, buses) normally shall refuel at the construction staging areas or commercial gas stations. Tracked machinery (backhoes, bulldozers) shall be refueled and lubricated on the construction right-of-way. Equipment maintenance shall be conducted in staging areas when practical. When impractical, repairs to equipment can be made on the construction right-of-way when approved by Keystone's representative.

Each fuel truck that transports and dispenses fuel to construction equipment or Project vehicles along the construction ROW or within equipment staging and material areas shall carry an oil spill response kit and spill response equipment onboard at all times. In the event that response materials are depleted through use or their condition is deteriorated through age, the materials will be replenished prior to placing the fueling vehicle back into service.

The following preventive measures apply to refueling and lubricating activities on the construction right-of-way:

- Construction activities shall be conducted to allow for prompt and effective cleanup of spills of fuel and other hazardous materials. Each construction crew, including cleanup crews shall have on hand sufficient tools and material to stop leaks and supplies of absorbent and barrier materials to allow rapid containment and recovery of spilled materials. Crew members must know and follow the procedure for reporting spills.
- Refueling and lubricating of construction equipment shall be restricted to upland areas at least 100 feet away from perennial streams and wetlands. Where this is not possible (e.g., trench dewatering pumps), the equipment shall be fueled by designated personnel with special training in refueling, spill containment, and cleanup. The Environmental Inspector shall ensure that signs are installed identifying restricted areas.
- No fuel, oil or hazardous material storage, staging, or transfer other than refueling will occur within 100 feet of any storm drain, drop inlet, or high consequence area (HCA).
- Spent oils, lubricants, filters, etc. shall be collected and disposed of at an approved location in accordance with state and federal regulations.
- Equipment shall not be washed in streams.
- Stationary equipment will be placed within a secondary containment if it will be operated or require refueling within 100 feet of a wetland or waterbody boundary.

Keystone may allow modification of the above specifications as necessary to accommodate specific situations or procedures. Any modifications must comply with all applicable regulations and permits.

3.2 Contingency Plans

The Contractor shall develop emergency response procedures for all incidents (e.g., spills, leaks, fires) involving hazardous materials which could pose a threat to human health or the environment. The procedures shall address activities in all work areas, as well as during transport to and from the construction right-of-way and to any disposal or recycling facility.

3.3 Equipment

The Contractor shall retain emergency response equipment in all areas where hazardous materials are handled or stored. This equipment shall be readily available to respond to a hazardous material emergency. Such equipment shall include, but not be limited to, the following:

- first aid supplies;
- phone or communications radio;
- protective clothing (Tyvek suit, gloves, goggles, boots);
- hand-held fire equipment;
- absorbent material and storage containers;
- non-sparking bung wrench and shovel; and
- brooms and dust pan.

Hazardous material emergency equipment shall be carried in all mechanic and supervisor vehicles. This equipment shall include, at a minimum:

- first aid supplies;
- phone or communications radio;
- 2 sets of protective clothing (Tyvek suit, gloves, goggles, boots);
- 1 non-sparking shovel;
- 6 plastic garbage bags (20 gallon);
- 10 absorbent socks and spill pads;
- Hand-held fire extinguisher;
- barrier tape; and
- 2 orange reflector cones.

Fuel and service trucks shall carry a minimum of 20 pounds of suitable commercial sorbent material.

The Contractor shall inspect emergency equipment weekly, and service and maintain equipment regularly. Records shall be kept of all inspections and services.

3.4 Emergency Notification

Emergency notification procedures between the Contractor and Keystone shall be established in the planning stages of construction. A Keystone representative shall be identified to serve as contact in the event of a spill during construction activities. In the event of a spill meeting government reporting criteria, the Contractor immediately shall notify the Keystone representative who, in turn, shall notify the appropriate regulatory agencies.

Any material released into water that creates a sheen must be reported immediately to Keystone. The Contractor is required to notify Keystone immediately if there is any spill of oil, oil products, or hazardous materials that reaches a wetland or waterbody. Incidents on public highways shall be reported to Keystone and the appropriate agencies by Keystone.

If a spill occurs on navigable waters of the United States, Keystone shall notify the National Response Center (NRC) at 1-800-424-8802. For spills that occur on public lands, into surface waters, or into sensitive areas, the appropriate governmental agency's district office also shall be notified.

3.5 Spill Containment and Countermeasures

In the event of a spill of hazardous material, Contractor personnel shall:

- notify the appointed Keystone representative;
- identify the product hazards related to the spilled material and implement appropriate safety procedures, based on the nature of the hazard;
- control danger to the public and personnel at the site;
- implement spill contingency plans and mobilize appropriate resources and manpower;
- isolate or shutdown the source of the spill;
- block manholes or culverts to limit spill travel;
- initiate containment procedures to limit the spill to as small an area as possible to prevent damage to property or areas of environment concern (e.g., watercourses); and
- commence recovery of the spill and cleanup operations.

When notified of a spill, the Keystone representative shall immediately ensure that:

- Action is taken to control danger to the public and personnel at the site.
- Spill contingency plans are implemented and necessary equipment and manpower are mobilized.

- Measures are taken to isolate or shutdown the source of the spill.
- All resources necessary to contain, recover and clean up the spill are available.
- Any resources requested by the Contractor from Keystone are provided.
- The appropriate agencies are notified. For spills which occur on public lands, into surface waters or into sensitive areas, the appropriate federal or state managing office shall also be notified and involved in the incident.

For a land spill, berms shall be constructed with available equipment to physically contain the spill. Personnel entry and travel on contaminated soils shall be minimized. Sorbent materials shall be applied or, if necessary, heavily contaminated soils shall be removed to an approved facility. Contaminated sorbent materials and vegetation shall also be disposed of at an approved facility.

For a spill threatening a waterbody, berms or trenches shall be constructed to contain the spill prior to entry into the waterbody. Deployment of booms, skimmers, and sorbent materials shall be necessary if the spill reaches the water. The spilled product shall be recovered and the contaminated area shall be cleaned up in consultation with spill response specialists and appropriate government agencies.

4.0 UPLANDS (AGRICULTURAL, FOREST, PASTURE, RANGE AND GRASS LANDS)

4.1 Interference with Irrigation Systems

If existing irrigation systems (flood irrigation, ditch irrigation, pivot, wheel, or other type of spray irrigation systems), irrigation ditches, or sheet flow irrigation shall be impacted by the construction of the pipeline, the following mitigative measures shall be implemented unless otherwise approved or directed by Keystone:

- If it is feasible and mutually acceptable to Keystone and the landowner or landowner's designate, temporary measures shall be implemented to allow an irrigation system to continue to operate across land on which the pipeline is being constructed.
- If the pipeline or temporary work areas intersect an operational (or soon to be operational) pivot or other spray irrigation system, Keystone shall establish with the landowner or landowner's designate an acceptable amount of time the irrigation system may be out of service. If an irrigation system interruption results in crop damages, either on the pipeline construction right-of-way or off the construction right-of-way, the landowner shall be compensated reasonably for all such crop damages.
- If the pipeline or temporary work areas intersect an operational sheet flow irrigation system, Keystone shall establish with the landowner or landowner's designate an acceptable amount of time the irrigation system may be out of service. If an irrigation system interruption results in crop

damages, either on the pipeline construction right-of-way or off the construction right-of-way, the landowner shall be compensated reasonably for all such crop damages.

- Irrigation ditches that are active at the time of construction shall not be stopped or obstructed except for the length of time to install the pipeline beneath the ditch (typically, one day or less) unless otherwise approved or directed by Keystone.

4.2 Clearing

The objective of clearing is to provide a clear and unobstructed right-of-way for safe and efficient construction of the pipeline. The following mitigable measures shall be implemented:

- Construction traffic shall be restricted to the construction right-of-way, existing roads, and approved private roads.
- Construction right-of-way boundaries including pre-approved temporary workspace shall be clearly staked to prevent disturbance to unauthorized areas.
- If crops are present, they shall be mowed or disced to ground level unless an agreement is made for the landowner to remove.
- Burning is prohibited on cultivated land.
- Construction right-of-way at timber shelterbelts in agricultural areas shall be reduced to the minimum necessary to construct the pipeline.

4.3 Topsoil Removal and Storage

The objective of topsoil handling is to maintain topsoil capability by conserving topsoil for future replacement and reclamation and to minimize the degradation of topsoil from compaction, rutting, loss of organic matter, or soil mixing so that successful reclamation of the right-of-way can occur. The following mitigative measures shall be implemented during topsoil removal and storage unless otherwise approved or directed by Keystone based on site-specific conditions or circumstances. All work shall be conducted in accordance with applicable permits.

- In cultivated and agricultural lands, the actual depth of the topsoil, to a maximum depth of 12 inches, will be stripped from:
    - The area excavated above the pipeline
    - The area above the pipeline plus the spoil storage; or
    - Entire ROW

  as required by applicable permit agreements with the landowner or as dictated by site-specific conditions.
- Stripped topsoil is to be stockpiled in a windrow along the edge of the right-of-way. The Contractor shall perform work in a manner to minimize the potential for subsoil and topsoil to be mixed.

- Under no circumstances shall the Contractor use topsoil to fill a low area.
- If required due to excessively windy conditions, topsoil piles shall be tackified using either water or a suitable tackifier (liquid mulch binder).
- Gaps in the rows of topsoil will be left in order to allow drainage and prevent ponding of water adjacent to or on the right-of-way.
- Topsoil shall not be utilized to construct ramps at road or waterbody crossings.

4.4 Grading

The objective of grading is to develop a right-of-way that allows the safe passage of equipment and meets the bending limitations of the pipe. The following mitigative measures shall be implemented during grading unless otherwise approved or directed by Keystone based on site-specific conditions or circumstances. However, all work shall be conducted in accordance with applicable permits.

- All grading shall be undertaken with the understanding that original contours and drainage patterns shall be re-established to the extent practicable..
- Agricultural areas that have terraces shall be surveyed to establish pre-construction contours to be utilized for restoration of the terraces after construction.
- On steep slopes, or wherever erosion potential is high, temporary erosion control measures shall be implemented.
- Bar ditches adjacent to existing roadways to be crossed during construction shall be adequately ramped with grade or ditch spoil to prevent damage to the road shoulder and ditch.
- Where the construction surface remains inadequate to support equipment travel, timber mats, timber riprap, or other method shall be used to stabilize surface conditions.

The Contractor shall limit the interruption of the surface drain network in the vicinity of the right-of-way using the appropriate methods:

- providing gaps in the rows of subsoil and topsoil in order to prevent any accumulation of water on the land;
- preventing obstructions in furrows, furrow drains, and ditches;
- installing flumes and ramps in furrows, furrow drains, and ditches to facilitate water flow across the construction right-of-way and allow for construction equipment traffic; and
- installing flumes over the trench for any watercourse where flow is continuous during construction.

4.5 Temporary Erosion and Sediment Control

4.5.1 General

Temporary erosion and sediment control measures shall be installed immediately after initial disturbance of the soil, maintained throughout construction (on a daily basis), and reinstalled as necessary until replaced by permanent erosion control structures or restoration of the construction right-of-way is complete.

Specifications and configurations for erosion and sediment control measures may be modified by Keystone as necessary to suit actual site conditions. However, all work shall be conducted in accordance with applicable permits.

The Contractor shall inspect all temporary erosion control measures at least daily in areas of active construction or equipment operation, weekly in areas with no construction or equipment operation, and within 24 hours of each significant rainfall event of 0.5 inches or greater. The Contractor shall repair all ineffective temporary erosion control measures as expediently as practicable.

4.5.2 Sediment Barriers

Sediment barriers shall be constructed of silt fence, staked hay or straw bales, compacted earth (e.g., drivable berms across travel lanes), sand bags, or other appropriate materials.

The Contractor shall install sediment barriers in accordance with Details 1 and 2 or as otherwise approved or directed by Keystone. The Contractor is responsible for properly installing, maintaining, and replacing temporary and permanent erosion controls throughout construction and cleanup. In wetland or riparian zones, the Contractor will install sediment control structures along the construction right-of-way edges prior to vegetation removal where practicable. The aforementioned sediment barriers may be used interchangeably or together depending on site-specific conditions. In most cases, silt fence shall be utilized where longer sediment barriers are required.

Sediment barriers shall be installed below disturbed areas where there is hazard of offsite sedimentation. These areas include:

- the base of slopes adjacent to road crossings;
- the edge of the construction right-of-way adjacent to and upgradient of a roadway, flowing stream, spring, wetland, or impoundment;
- trench or test water discharge locations where required;
- where waterbodies or wetlands are adjacent to the construction right-of-way; (the Contractor shall install sediment barriers along the edge of the construction right-of-way as necessary to contain spoil and sediment within the construction right-of-way)

- across the entire construction right-of-way at flowing waterbody crossings;
- right-of-way immediately upslope of the wetland boundary at all standard (saturated or standing water) wetland crossings as necessary to prevent sediment flow into the wetland; (Sediment control barriers are not required at “dry” wetlands.)
- along the edge of the construction right-of-way within standard (saturated or standing water) wetland boundaries as necessary to contain spoil and sediment within the construction right-of-way. Sediment control barriers are not required at “dry” wetlands

Sediment barriers placed at the toe of a slope shall be set a sufficient distance from the toe of the slope, if possible, in order to increase ponding volume.

Sediment control barriers shall be placed so as not to hinder construction operations. If silt fence or straw bale sediment barriers (in lieu of driveable berms) are placed across the entire construction right-of-way at waterbodies, wetlands, or upslope of roads, a provision shall be made for temporary traffic flow through a gap for vehicles and equipment to pass within the structure. Immediately following each day’s shutdown of construction activities, a row of straw bales or a section of silt fence shall be placed across the upgradient side of the gap with sufficient overlap at each end of the barrier gap to eliminate sediment bypass flow, followed by bales tightly fitted to fill the gap. Following completion of the equipment crossing, the gap shall be closed using silt fence or straw bale sediment barrier.

The Contractor shall maintain straw bale and silt fence sediment barriers by removing collected sediment and replacing damaged bales. Sediment shall be removed and placed where it shall not reenter the barrier when sediment loading is greater than 40 percent or if directed by Keystone. If straw bale filters cannot be cleaned out due to access problems, the Contractor shall place a new row of sediment barriers upslope.

The Contractor shall use mulch and straw bales that are free of noxious weeds. Mulch or straw bales that contain evidence of noxious weeds or other undesirable species shall be rejected by the Contractor.

The Contractor shall remove sediment barriers, except those needed for permanent erosion and sediment control, during clean up of the construction right-of-way.

4.5.3 Trench Plugs

The Contractor shall use trench plugs at the edge of flowing waterbody crossings and at the edge of wetlands with standing water to prevent diversion of water into upland portions of the pipeline trench and to keep any accumulated trench water out of the waterbody. Trench plugs shall be of sufficient size to withstand upslope water pressure.

4.5.4 Temporary Slope Breakers (Water Bars)

The Contractor shall install temporary slope breakers on slopes greater than 5% on all disturbed lands at the following recommended spacing:

Slope (%)	Spacing (feet)
5 - 15	300
>15 - 30	200
>30	100

The gradient of each slope breaker shall be 2 to 4 percent.

If so directed by the landowner, the Contractor may not install temporary slope breakers (water bars) in cultivated land.

Temporary slope breakers shall be constructed of soil, silt fence, staked straw bales, sand bags, or similar materials authorized by Keystone.

The Contractor shall direct the outfall of each temporary slope breaker to a stable, well-vegetated area or construct an energy-dissipating device at the end of the slope breaker and off the construction right-of-way as shown in Detail 3. The outfall of each temporary slope breaker shall be installed to prevent sediment discharge into wetlands, waterbodies, or other sensitive resources.

Specifications and configurations for temporary slope breakers may be modified by Keystone as necessary to suit actual site conditions. However, all work shall be conducted in accordance with applicable permits.

4.5.5 Drainage Channels or Ditches

Drainage channels or ditches shall be used on a limited basis to provide drainage along the construction right-of-way and toe of cut slopes as well as to direct surface runoff across the construction right-of-way or away from disturbances and onto natural undisturbed ground. Channels or ditches shall be constructed by the Contractor during grading operations. Where there is inadequate vegetation at the channel or ditch outlet, sediment barriers, check berms, or other appropriate measures shall be used to control erosion.

4.5.6 Temporary Mulching

Unless otherwise directed by Keystone, the Contractor shall apply temporary seed and/or mulch on disturbed construction work areas that have been inactive for one month or are expected to be inactive for a month or more. The Contractor shall not apply temporary mulch in cultivated areas unless specifically requested by the landowner. The Contractor shall not apply mulch within wetland boundaries.

Temporary mulch of straw or equivalent applied on slopes shall be spread uniformly to cover at least 75 percent of the ground surface at an approximate rate of 2 tons per acre of straw or its equivalent. Mulch application on slopes within 100 feet of waterbodies and wetlands shall be increased to an approximate rate of 3 tons per acre.

4.5.7 Tackifier

When wetting topsoil piles with water does not prevent wind erosion, the Contractor shall temporarily suspend topsoil handling operations and apply a tackifier to topsoil stockpiles at the rate recommended by the manufacturer.

Should construction traffic, cattle grazing, heavy rains, or other related construction activity disturb the tackified topsoil piles and create a potential for wind erosion, additional tackifier shall be applied by the Contractor.

4.6 Stringing

The objective of stringing is to place the line pipe along the construction right-of-way for bending and welding in an expedient and efficient manner.

The Contractor shall utilize one or more of the following mitigative measures as applicable and when necessary to reduce compaction on the working side of the right-of-way or as directed by Keystone. However, all work shall be conducted in accordance with applicable permits.

- prohibiting access by certain vehicles;
- using only machinery possessing low ground pressure (tracks or extra-wide tires);
- limiting access and thus minimizing the frequency of all vehicle traffic;
- digging ditches to improve surface drainage;
- using timber riprap, matting, or geotextile fabric overlain with soil; and
- stopping construction for a period of time.

4.7 Trenching

The objective of trenching is to provide a ditch of sufficient depth and width with a bottom to continuously support the pipeline. During trenching operations, the following mitigative measures shall be implemented unless otherwise approved or directed by Keystone based on site-specific conditions or circumstances. All work shall be conducted in accordance with applicable permits.

- Subsoil shall be segregated from topsoil in separate, distinct rows with a separation that shall limit any admixing of topsoil and subsoil during handling.

- Gaps must be left in the spoil piles that coincide with breaks in the strung pipe to facilitate natural drainage patterns and to allow the passage of livestock or wildlife.
- Trenching operations shall be followed as closely as practicable by lower in and backfill operations to minimize the length of time the ditch is open.
- Construction debris (e.g., welding debris) and other garbage shall not be deposited in the ditch.

The Contractor shall prepare a blasting plan that is applicable to any locations where blasting will be necessary adjacent to existing high pressure pipelines, overhead or underground utilities, farm operations, or public crossings. The Contractor and its blasting supervisor shall be thoroughly familiar with and comply with the rules and regulations of Occupational Safety and Health Administration (OSHA) and all federal, state, county and local regulations governing blasting operations. Keystone will file the blasting plan with applicable state or local jurisdictions, where required. Excavation and blasting along the ROW may uncover paleontological resources of scientific value. Keystone will consult with the appropriate regulatory agencies in each state on the applicability and requirements for Paleontological Resource Protection Plans. Keystone will prepare and file plans addressing vertebrate fossils with any respective states, as required.

Should blasting be necessary for removal of rock, the following mitigative measures may be implemented:

- The Contractor shall use non-electric initiation systems for all blasting operations. If required by the blasting plan, blasting will be monitored for vibration levels and peak particle velocity. This work shall be performed by a third-party vibration monitoring consultant hired by and reporting to the Constructor Representative. The Contractor shall arrange for detonations to be carried out in cooperation with this consultant.
- Prior to using explosives, the Contractor shall advise residents of the immediate area, in order to prevent any risk of accidents or undue disturbances.
- No blasting shall be done without approval of the Constructor Representative. Prior to any detonation of explosives in the vicinity of a loaded line, dwelling, structure, overhead or underground utility, farm operation, or public crossings, a minimum of 48 hours notice shall be given to the Constructor Representative, in order that the appropriate people can be notified and the upstream and downstream mainline valves can be staffed.
- The Contractor shall obtain all necessary permits and shall comply with all legal requirements in connection with the use, storage, and transportation of explosives.
- Blasting mats or subsoil may be piled over the trench line to prevent rock from being blown outside the construction right-of-way.

- Each blasting location shall be cleared and cleaned up before and after all blasting operations.
- Blasting shall be carried out during regular, daylight working hours.
- The Contractor shall at all times protect his workers and the public from any injury or harm that might arise from drilling dust and the use of explosives.
- Only workers thoroughly experienced in handling explosives shall be permitted to supervise, handle, haul, load or shoot explosives. In those jurisdictions where the licensing of blasters is mandatory, the Contractor shall provide the Constructor Representative with proof of the required certification for every person so required.
- The drilling pattern shall be set in a manner to achieve smaller rock fragmentation (maximum 1 foot in diameter) in order to use as much as possible of the blasted rock as backfill material after the pipe has been padded in accordance with the specifications.
- Blasting testing of surface-water resources and water wells within 150 feet of the centerline will be performed in compliance with all applicable permits.

4.7.1 Trench Dewatering/Well Points

The Contractor shall make all reasonable efforts to discharge trench water in a manner that avoids damage to adjacent agricultural land, crops, and pasture. Damage includes, but is not limited to, the inundation of crops for more than 24 hours, deposition of sediment in ditches, and the deposition of gravel in fields or pastures.

If trench dewatering is necessary in an area where salt damage to adjacent crops is evident, the Environmental Inspector shall conduct a field conductivity test on the trench water before it is discharged. If the conductivity of the trench water is determined to potentially affect soil quality, it shall not be discharged to areas where salt damage to crops is evident, but shall be directed as feasible so that water flows over a well vegetated, non-cropland area or through an energy dissipater and sediment barrier, then directed to nearby ditches or brackish wetlands or waterbodies.

When pumping water from the trench for any reason, the Contractor shall ensure that adequate pumping capacity and sufficient hose is available to permit dewatering as follows:

- No heavily silt-laden trench water shall be allowed to enter a waterbody or wetland directly but shall instead be diverted through a well vegetated area, a geotextile filter bag, or a permeable berm (straw bale or Keystone approved equivalent).
- Trench water shall not be disposed of in a manner which could damage crops or interfere with the functioning of underground drainage systems.

The Contractor shall screen the intake hose and keep the hose either one foot off the bottom of the trench or in a container to minimize entrainment of sediment.

4.8 Welding, Field Joint Coating, and Lowering In

The objectives of welding, field joint coating, and lowering in are to provide continuous segments of pipeline, to provide corrosion protection to the weld areas of the pipeline, and to place the pipeline in the center of the trench, without stress, at the required depth of cover. The following mitigative measures shall be followed during pipe welding, field joint coating, and lowering in, unless otherwise specified by Keystone in response to site-specific conditions or circumstances. All work shall be conducted in accordance with applicable permits.

- Shavings produced during beveling of the line pipe are to be removed immediately following this operation to ensure that livestock and wildlife do not ingest this material. When welding operations create a continuous line of pipe that may be left in the right-of-way for an extended period of time due to construction or weather constraints, a gap in the welded pipe shall be provided to allow for access at farm road crossings and for passage of livestock and wildlife.
- Prior to the application of epoxy powder, urethane epoxy, or other approved pipe coatings, a tarp shall be placed underneath the pipe to collect any overspray of epoxy powder and liquid drippings. Excess powder, liquid, or other hazardous materials (e.g. brushes, rollers, gloves) shall be continuously collected and removed from the construction right-of-way and disposed of in a manner appropriate for these materials.

4.9 Padding and Backfilling

The objective of padding and backfilling is to cover the pipe with material that is not detrimental to the pipeline and pipeline coating. The following mitigative measures shall be utilized during backfilling, unless otherwise approved or directed by Keystone based on site-specific conditions or circumstances. All work shall be conducted in accordance with applicable permits.

- Excessive water accumulated in the trench shall be eliminated prior to backfilling.
- In the event it becomes necessary to pump water from open trenches, the Contractor shall pump the water and discharge it in accordance with the requirements of the Stormwater Pollution Prevention Plan (SWPPP) in order to avoid damaging adjacent agricultural land, crops, and pasture. Detail 5 and Detail 6 provide typical examples of dewatering structures.
- If it is impossible to avoid water-related damages (including inundation of crops for more than 24 hours, deposition of sediment in ditches and other water courses, and the deposition of gravel in fields, pastures, and any water courses), Keystone shall reasonably compensate the landowners for the damage and/or shall correct the damage so as to restore the land, crops, pasture, water courses, etc. to their pre-construction condition.

- All pumping of water shall comply with existing drainage laws and local ordinances relating to such activities and provisions of the Clean Water Act.
- Prior to backfilling, all drain tile shall be permanently repaired, inspected, and the repair documented as described in Section 5.5.
- Prior to backfilling, trench breakers shall be installed on slopes where necessary to minimize the potential for water movement down the ditch and potential subsequent erosion.
- During backfill, the stockpiled subsoil shall be placed back into the trench before replacing the topsoil.
- Topsoil shall not be utilized for padding the pipe.
- Backfill shall be compacted to a minimum of 90% of pre-existing conditions where the trench line crosses tracks of wheel irrigation systems (pivots).
- To reduce the potential for ditch line subsidence, spoil shall be replaced and compacted by backhoe bucket or by the wheels or tracks of equipment traversing down the trench.
- The lesser of 4 feet or the actual depth of topsoil cover, shall not be backfilled with soil containing rocks of any greater concentration or size than existed prior to pipeline construction in the pipeline trench, bore pits, or other excavations.

4.10 Cleanup

The objective of cleanup activities shall be to prepare the right-of-way and other disturbed areas to approximate pre-activity ground contours where appropriate and to replace spoil and stockpiled material in a manner which preserves soil capability and quality to a degree reasonably equivalent to the original or that of representative undisturbed land. The following mitigative measures shall be utilized during cleanup, unless otherwise approved or directed by Keystone based on specific conditions or circumstances. All work shall be conducted in accordance with applicable permits.

- Cleanup shall occur immediately following backfilling operations when weather or seasonal conditions allow.
- All garbage and construction debris (e.g., lathing, ribbon, welding rods, pipe bevel shavings, pipe spacer ropes, end caps, pipe skids) shall be collected and disposed of at approved disposal sites.
- The right-of-way shall be re-contoured with spoil material to approximate pre-construction contours and as necessary to limit erosion and subsidence. Loading of slopes with unconsolidated spoil material shall be avoided during slope re-contouring. Topsoil shall be replaced after re-contouring of the grade with subsoil. The topsoil shall be replaced on the subsoil storage area and over the trench so that after settling occurs, the topsoil's approximate original depth and contour (with an allowance for settling) shall be achieved.
- Subsoil shall not be placed on top of topsoil.

- Surface drainage shall be restored and re-contoured to conform to the adjacent land drainage system.
- Erosion control structures such as permanent slope breakers and cross ditches shall be installed on steep slopes where necessary to control erosion by diverting surface run-off from the right-of-way to stable and vegetated off right-of-way areas.
- During cleanup, temporary sediment barriers such as silt fence and hay bale diversions will be removed; accumulated sediment will re-contoured with the rest of the ROW; and permanent erosion controls will be installed as necessary.
- After construction, all temporary access shall be returned to prior construction conditions unless specifically agreed with the landowner or otherwise specified by Keystone.
- Warning signs, aerial markers, and cathodic protection test leads shall be installed in locations that shall not impair farming operations and are acceptable to the landowner.
- All bridges, fences and culverts existing prior to construction shall be restored to meet or exceed approximate pre-construction conditions. Caution shall be utilized when re-establishing culverts to ensure that drainage is not improved to a point that would be detrimental to existing waterbodies and wetlands.
- All temporary gates installed during construction shall be replaced with permanent fence unless otherwise requested by the landowner.

4.11 Reclamation and Revegetation

The objectives of reclamation and revegetation are to return the disturbed areas to approximately pre-construction use and capability. This involves the treatment of soil as necessary to preserve approximate pre-construction capability and the stabilization of the work surface in a manner consistent with the initial land use.

The following mitigative measures will be utilized unless otherwise approved or directed by Keystone based on site specific conditions or circumstances. However, all work shall be conducted in accordance with applicable permits.

4.11.1 Relieving Compaction

- Compacted cropland compacted shall be ripped a minimum of 3 passes at least 18 inches deep and all pasture shall be ripped or chiseled a minimum of three passes at least 12 inches deep before replacing topsoil.
- Areas of the construction right-of-way that were stripped for topsoil salvage shall be ripped a minimum of 3 passes (in cross patterns, as practical) prior to topsoil replacement. The approximate depth of ripping shall be 18 inches (or a lesser depth if damage may occur to existing drain tile systems). After ripping, the subsoil surface shall be

graded smooth and any subsoil clumps broken up (disc and harrow) in an effort to avoid topsoil mixing.

- The de-compacted construction right-of-way shall be tested by the Contractor at regular intervals for compaction in agricultural and residential areas. Tests shall be conducted on the same soil type under similar moisture conditions in undisturbed areas immediately adjacent to the right-of-way to approximate pre-construction conditions. Penetrometers or other appropriate devices shall be used to conduct tests
- Topsoil shall be replaced to pre-existing depths once ripping and discing of subsoil is complete up to a maximum of 12 inches. Topsoil compaction on cultivated fields shall be alleviated by cultivation.
- If there is any dispute between the landowner and Keystone as to what areas need to be ripped or chiseled, the depth at which compacted areas should be ripped or chiseled, or the necessity or rates of lime and fertilizer application, the appropriate NRCS shall be consulted by Keystone and the landowner.

Plowing under of organic matter including wood chips and manure, or planting of a green crop such as alfalfa to decrease soil bulk density and improve soil structure or any other measures in consultation with the Natural Resource Conservation Service (NCRS) shall be considered if mechanical relief of compaction is deemed not satisfactory.

In the first year after construction, Keystone will inspect the ROW to identify areas of erosion or settling. Subsequently, Keystone will monitor erosion and settling through aerial patrols, which are part of Keystone's Integrity Management Plan, and through landowner reporting. Landowner reporting will be facilitated through use of Keystone's toll-free telephone number, which will be made available to all landowners on the ROW. Landowner reporting also may be facilitated through contact with Keystone's field offices.

Keystone plans to minimize impacts on soil productivity that may result from construction activities, but recognizes that some short- to long-term decreases in agricultural productivity are possible. Keystone recognizes its responsibility to restore agricultural productivity on the pipeline ROW and to compensate landowners for demonstrated decreases in productivity that may result from any degradation of agricultural soils along the ROW.

4.11.2 Rock Removal

- On agricultural land, rocks that are exposed on the surface due to construction activity shall be removed from the right-of-way prior to and after topsoil replacement This effort will result in an equivalent quantity, size and distribution of rocks to that found on adjacent lands.
- Clearing of rocks may be carried out with a mechanical rock picker or by manual means, provided that preservation of topsoil is assured. Rock removed from the right-of-way shall be hauled off the

landowner's premises or disposed of on the landowner's premises at a location that is mutually acceptable to the landowner and to Keystone.

4.11.3 Soil Additives

If site-specific conditions warrant and if agreed to by the landowner, the Contractor shall apply amendments (fertilizer and soil pH modifier materials and formulations) commonly used for agricultural soils in the area and in accordance with written recommendations from the local soil conservation authority, land management agencies, or landowner. Amendments shall be incorporated into the normal plow layer as soon as possible after application.

4.11.4 Seeding

- The final seed mix shall be based on input from the local Natural Resource Conservation Service and the availability of seed at the time of reclamation. The landowner may request specific seeding requirements during easement negotiations.
- Certificates of seed analysis are required for all seed mixes to limit the introduction of noxious weeds.
- Seed not utilized within 12 months of seed testing shall be approved by Keystone prior to use. Seeding shall follow cleanup and topsoil replacement as closely as possible. Seed shall be applied to all disturbed surfaces (except cultivated fields unless requested by the landowner) as indicated on the construction drawings
- If mulch was applied prior to seeding for temporary erosion control, the Contractor shall remove and dispose of the excess mulch prior to seedbed preparation to ensure that seedbed preparation equipment and seed drills do not become plugged with excess mulch; and to support an adequate seedbed; and to ensure that seed incorporation or soil packing equipment can operate without becoming plugged with mulch.
- The Contractor may evenly re-apply and anchor (straw crimp) the removed temporary mulch on the construction right-of-way following seeding.
- Identified seeding areas shall be seeded at a rate appropriate for the region and stability of the reclaimed surface. Seeding rates shall be based on pure live seed.
- Weather conditions, construction right-of-way constraints, site access, and soil type shall influence the seeding method to be used (i.e., drill seeding versus broadcast seeding). All areas seeded by the Contractor, except for temporary cover crops, shall be drill seeded unless the right-of-way is too steep to facilitate drill seeding. Temporary cover crop seed shall be broadcast.

- The Contractor shall delay seeding as necessary until the soil is in the appropriate condition for drill seeding.
- The Contractor shall use a Truax brand or equivalent-type drill seeder equipped with a cultipacker designed and equipped to apply grass and grass-legume seed mixtures with mechanisms such as seed box agitators to allow even distribution of all species in each seed mix, with an adjustable metering mechanism to accurately deliver the specified seeding rate and with a mechanism such as depth bands to accurately place the seed at the specified depth.
- The Contractor shall operate drill seeders at an appropriate speed so the specified seeding rate and depth is maintained.
- The Contractor shall calibrate drill seeders so that the specified seeding rate is planted. The row spacing on drill seeders shall not exceed 8 inches.
- The Contractor shall plant seed at depths consistent with the local or regional agricultural practices.
- Broadcast or hydro seeding, used in lieu of drilling, shall utilize double the recommended seeding rates. Where seed is broadcast, the Contractor shall use a harrow, cultipacker, or other equipment immediately following broadcasting to incorporate the seed to the specified depth and to firm the seedbed.
- The Contractor shall delay broadcast seeding during high wind conditions if even distribution of seed is impeded.
- The Contractor shall hand rake all areas that are too steep or otherwise cannot be safely harrowed or cultipacked in order to incorporate the broadcast seed to the specified depth.
- Hydro seeding may be used, on a limited basis, where the slope is too steep or soil conditions do not warrant conventional seeding methods. Fertilizer, where specified, may be included in the seed, virgin wood fiber, tackifier, and water mixture. When hydro-seeding, virgin wood fiber shall be applied at the rate of approximately 3,000 pounds per acre on an air-dry weight basis as necessary to provide at least 75% ground cover. Tackifier shall consist of biodegradable, vegetable-based material and shall be applied at the rate recommended by the manufacturer. The seed, mulch, and tackifier slurry shall be applied so that it forms a uniform, mat-like covering of the ground.
- Keystone shall work with landowners to discourage intense livestock grazing of the construction right-of-way during the first growing season by utilization of temporary fencing or deferred grazing, or increased grazing rotation frequency.

4.11.5 Permanent Erosion and Sediment Control

The Contractor shall restore all existing landowner soil conservation improvements and structures disturbed by pipeline construction to the

approximate pre-construction line and grade. Soil conservation improvements and structures include, but are not limited to, grassed waterways, toe walls, drop inlets, grade control works, terraces, levees, and farm ponds.

4.11.5.1 Trench Breakers

The Contractor shall install trench breakers in steep terrain where necessary to limit the potential for trench line erosion and at the base of slopes adjacent to waterbodies and wetlands.

Trench breakers shall be constructed of materials such as sand bags, sand/cement bags, bentonite bags, or other suitable materials by the Contractor (Detail 7). The Contractor shall not use topsoil in trench breakers.

4.11.5.2 Permanent Slope Breakers (Water Bars)

Permanent slope breakers (water bars) shall be constructed of soil or, in some instances, sand bags.

The Contractor shall construct permanent slope breakers on the construction right-of-way where necessary to limit erosion, except in cultivated and residential areas. Slope breakers shall divert surface runoff to adjacent stable vegetated areas or to energy-dissipating devices as shown on Detail 3. In general, permanent slope breakers should be installed immediately downslope of all trench breakers. Permanent slope breakers shall be installed as specified on the construction drawings or generally with a minimum spacing as shown on the following table:

Slope (%)	Spacing (feet)
5 - 15	300
>15 – 30	200
>30	100

The gradient (fall) for each slope breaker shall be two percent to four percent unless otherwise approved by Keystone based on site-specific conditions.

The Contractor shall construct slope breakers to divert surface flow to a stable, well-vegetated area. In the absence of a stable area, the Contractor shall construct appropriate energy-dissipating devices at the end of the slope breaker and beyond the area disturbed by construction.

4.11.5.3 Mulching

The Contractor shall apply mulch on all areas with high erosion potential and on slopes greater than 8 percent unless otherwise

approved by Keystone based on site-specific conditions or circumstances. The Contractor shall spread mulch uniformly over the area to cover at least 75 percent of the ground surface at an approximate rate of 2 tons per acre of straw or its equivalent. The Environmental Inspector may reduce the application rate or forego mulching an area altogether if there is an adequate cover of rock or organic debris to protect the slope from erosion.

Mulch application includes straw mulch or hydro mulch and tackifier. The Contractor shall not apply mulch in cultivated areas unless deemed necessary by Keystone.

The Contractor shall use mulch that is free of noxious weeds.

The Contractor shall apply mulch immediately following seeding. The Contractor shall not apply mulch in wetlands.

If a mulch blower is used, the majority of strands of the mulching material shall not be shredded to less than 8 inches in length to allow anchoring. The Contractor shall anchor mulch immediately after application to minimize loss by wind and water.

When anchoring (straw crimping) by mechanical means, the Contractor shall use a tool specifically designed for mulch anchoring with flat, notched disks to properly crimp the mulch to a depth of 2 to 3 inches. A regular farm disk shall not be used to crimp mulch. The crimping of mulch shall be performed across the slope of the ground, not parallel to it. In addition, in areas of steep terrain, tracked vehicles may be used as a means of crimping mulch (equipment running up and down the hill to leave crimps perpendicular to the slope), provided they leave adequate coverage of mulch.

In soils possessing high erosion potential, the Contractor may be required to make two passes with the mulch-crimping tool; passes must be as perpendicular to the others as possible.

When anchoring with liquid mulch binders (tackifiers), the Contractor shall use a biodegradable tackifier derived from a vegetable-based, organic source. The Contractor shall apply mulch binders at rates recommended by the manufacturer.

The Contractor shall limit the use of tackifiers for anchoring straw and the use of hydromulch and tackifier to areas that are too steep or rocky to safely or effectively operate mechanical mulch-anchoring tools. No asphalt-based tackifiers shall be used on the Project.

4.11.5.4 Erosion Control Matting

Erosion control matting shall be applied where shown on the construction drawings as shown on Detail 4. The Contractor shall anchor the erosion control matting with staples or other approved devices.

The Contractor shall use erosion control matting made of biodegradable, natural fiber such as straw or coir (coconut fiber).

The Contractor shall prepare the soil surface and install the erosion control matting to ensure it is stable and the matting makes uniform contact with the soil of the slope face or stream bank with no bridging of rills, gullies, or other low areas.

4.11.5.5 Riprap and Stream Bank Stabilization

Disturbed banks of streambeds and waterbodies shall be restored to their approximate original contours unless otherwise directed. Erosion protection shall be applied as specified in the construction drawings.

Most restored banks will be protected through the use of flexible channel liners installed as specified in Detail 19.

If the original stream bank is excessively steep and unstable and/or flow conditions are severe, a more stable final contour may be specified and alternate stabilization measures may be installed.

Alternate stabilization measures may consist of rock riprap, bio-stabilization, or engineered structures such as brush layering, logwalls, cribwalls, or vegetated geo-grids. See Details 20, 23, and 24.

Stream bank riprap structures shall consist of a layer of stone underlain with approved filter fabric or a gravel filter blanket. Riprap shall extend from the stabilized streambed to the top of the stream bank. Native rock shall be utilized wherever practicable.

4.11.6 Fences

Upon completion of all backfilling, cleanup, and restoration, including mulching and seeding of the construction right-of-way, permanent repairs shall be made to all fences by using either the original material or good quality new material similar to existing fences.

Historic fences shall be carefully reassembled by hand from the original material. Where the original material has deteriorated to a state that

makes it unsalvageable, replacement material similar to the original shall be used if possible.

4.11.7 Farm Terraces

Keystone will work with landowners and farm service agencies to ensure restoration of farm terraces to their pre-construction function. Keystone may elect to negotiate a fair settlement with the landowner to employ a local land leveling contractor to restore the terrace.

Before any groundwork is performed in areas with farm terraces, Keystone will conduct a civil survey and photograph each terrace from two to three perspectives to document the location and contours of each terrace. Both the channel contour and the terrace berm will be surveyed within the construction right-of-way and up to 100 feet on either side of the ROW boundaries. The pre-construction survey and photographs will provide a baseline to ensure the proper restoration of the terrace following construction.

The Contractor will maintain the pre-disturbance drainage of water along the terrace channel and will install temporary flume pipe for this purpose. As necessary, temporary erosion control measures such as water bars and sediment barriers will be installed and maintained throughout construction to reduce the potential for soil erosion along or off the construction ROW.

Following installation of the pipe, the trench will be backfilled, and the Contractor will restore the terrace contours as agreed to with the landowner.

Should the landowner agree to have a local contractor restore the terraces, the Contractor will backfill the trench and restore the terrace using typical compaction methods for pipeline construction with the understanding that the landowner's contractor will re-excavate the location and re-install the terrace utilizing land levelling equipment and special compaction methods.

Should the landowner desire the Contractor to restore the terraces, the pipeline contractor will compact the trench before the terrace berm is replaced. Following restoration of the terraces, final contours and grades will be re-surveyed and documented with survey notes. Photographs will be taken from a minimum of two or three perspectives to document that the cross-section profile matches the adjacent undisturbed grades. Keystone will perform post-construction monitoring and inspection with the landowner's concurrence. Should the terraces require further work, Keystone will either compensate the landowner to perform the work or arrange for a local contractor to perform the work.

4.11.8 Right-of-Way and Pipeline Markers

Upon completion of all backfilling, cleanup and restoration, including mulching and seeding of the construction right-of-way, and during the time when the Contractor is making permanent repairs to fences, the Contractor shall install pipeline markers on each side of all roads, railroads, fence lines, stream crossings, and other areas where the pipeline markers do not conflict with intended land use.

4.12 Pasture and Range Lands

The following mitigative measures shall be implemented in addition to the requirements previously stated in Sections 4.1 thru 4.11 unless otherwise approved by Keystone based on site-specific conditions or circumstances. All work shall be conducted in accordance with applicable permits.

- Access across the right-of-way during construction shall be provided at locations requested by landowners, if practicable.
- Shavings produced during pipe bevel operations are to be removed immediately to ensure that livestock and wildlife do not ingest this material.
- Litter and garbage shall be collected and removed from the construction site at the end of the day's activities.
- Temporary gates shall be installed at fence lines for access to the construction right-of-way. These gates shall remain closed at all times. Upon completion of construction, the temporary gates shall be removed and the permanent fence replaced.
- Feeding or harassment of livestock or wildlife is prohibited.
- Construction personnel shall not be permitted to have firearms or pets on the construction right-of-way.
- All food and wastes shall be stored and secured in vehicles or appropriate facilities.
- Areas of disturbance in native range shall be seeded with a native seed mix after topsoil replacement.
- Improved pasture shall be seeded with a seed mix approved by individual landowners.

4.13 Forested Lands

Mitigation measures are required to ensure that pipeline construction activities have a minimal impact on forested lands.

Clearing, grubbing, and grading of trees, brush, and stumps shall be performed in accordance with the following mitigative measures in addition to the requirements previously stated in Sections 4.1 thru 4.11 unless otherwise approved or directed by Keystone based on site-specific conditions or circumstances. Keystone will address mitigation, reclamation and remediation

measures with individual landowners and comply with any applicable state requirements. These measures include non-vegetative remediation to reverse impacts on windbreaks, shelterbelts, and living snow fences. Where the pipeline follows an existing ROW in forested areas, Keystone attempted to route the pipeline as close as practical to the existing ROW. All work shall be conducted in accordance with applicable permits.

- Prior to the start of clearing activity, right-of-way boundaries, including pre-approved temporary workspaces, shall be clearly staked to prevent disturbance of unauthorized areas.
- If trees are to be removed from the construction right-of-way, Keystone shall consult with the landowner or landowner's designate to see if there are trees of commercial or other value to the landowner. Timber shall be salvaged as per landowner request.
- If there are trees of commercial or other value to the landowner, Keystone shall allow the landowner the right to retain ownership of the trees with the disposition of the trees to be negotiated prior to the commencement of land clearing and included in the easement agreement.
- If not performed by the landowner, the construction right-of-way Contractor may salvage all marketable timber from designated areas.
- Tree stumps shall be grubbed to a maximum of 5 feet on either side of the trench line and where necessary for grading a level surface for pipeline construction equipment to operate safely.
- Keystone shall follow the landowner's or landowner designee's desires as stated in the easement agreement regarding the disposal of trees, brush, and stumps of no value to the landowner by burning, burial, etc., or complete removal from any affected property.
- Timber salvage operations shall use cut-off-type saw equipment. Felling shall be undertaken in a manner that minimizes butt shatter, breakage, and off ROW disturbance. Skidders or alternate equipment shall be used to transport salvaged logs to stacking sites.
- Trees shall be felled to fall toward the center line of the right-of-way to avoid breaking trees and branches off ROW. Leaners (felled trees that inadvertently fall into adjacent undisturbed vegetation) shall be salvaged.
- Trees and slash falling outside the right-of-way shall be recovered and disposed..
- Salvaged logs shall be limbed and topped before removal from the construction right-of-way. Log decks (if required) shall be oriented to best facilitate loading by picker trucks and be located adjacent to the working side of the right-of-way, where possible.
- The Contractor shall not be allowed to dispose of woody debris in wooded areas along the pipeline right-of-way.
- Pruning of branches hanging over the right-of-way shall be done only when necessary for construction. Any branch that is broken or seriously damaged should be cut off near its fork and the collar of the branch preserved.

- All tree wastes, stumps, tree crowns, brushes, branches, and other forest debris shall be either burned, chipped (using a mobile chipper), or removed from the right-of-way according to Keystone instructions contained in the specific mitigation measures. Burial of this waste material on the site by the Contractor shall require the landowner's authorization. Chips must not be spread over cultivated land. However, they may be spread and incorporated with mineral soil over the forest floor at a density that shall not prevent revegetation of grass.
- Stump removal and brush clearing shall be done with bulldozers equipped with brush rakes to preserve organic matter.
- Decking sites shall be established: (1) approximately 2000 feet apart in timbered areas; (2) on sites located on approved temporary workspace in existing cleared areas; (3) in non-merchantable stands of timber; or (4) if no other options are available, in merchantable timber stands. Deck sites shall be appropriately sized to accommodate the loading equipment.
- If the landowner does not want the timber, the Contractor shall remove decked timber from the construction right-of-way and transport it to a designated all-weather access point or mill

4.14 Residential and Commercial/Industrial Areas

4.14.1 Residential and Commercial Areas

The principal measures that shall be used to mitigate impacts on existing residential and commercial areas include the following unless otherwise directed or approved by Keystone based on site-specific conditions or circumstances. All work shall be conducted in accordance with applicable permits.

- notifying landowners prior to construction;
- posting warning signs as appropriate;
- reducing the width of construction right-of-way, if practicable, by eliminating the construction equipment passing lane, reducing the size of work crews, or utilizing the "stove pipe" or "drag section" construction techniques;
- removing fences, sheds, and other improvements as necessary for protection from construction activities;
- to the extent possible, preserving mature trees and landscaping while ensuring the safe operation of construction equipment;
- fencing the edge of the construction work area adjacent to a residence for a distance of 100 feet on either side of the residence to ensure that construction equipment and materials, including the spoil pile, remain within the construction work area;
- limiting the hours during which operations with high-decibel noise levels (i.e., drilling and boring) can be conducted;
- limiting dust impact through prearranged work hours and by utilizing dust minimization techniques;

- ensuring that construction proceeds quickly through such areas, thus minimizing exposure to nuisance effects such as noise and dust;
- maintaining access and traffic flow during construction activities, particularly for emergency vehicles;
- cleaning up construction trash and debris daily;
- fencing or plating open ditches during non-construction activities;
- if the pipeline centerline is within 25 feet of a residence, ensuring that the trench is not excavated until the pipe is ready for installation and that the trench shall be backfilled immediately after pipe installation; and
- immediately after backfilling the trench, restoring all lawn areas, shrubs, specialized landscaping, fences, and other structures within the construction work area to its pre-construction appearance or the requirements of the landowner. Restoration work shall be done by personnel familiar with local horticultural and turf establishment practices.
- to the extent possible, preserving mature trees and landscaping while ensuring the safe operation of construction equipment;

4.14.2 Site-Specific Plans

For any residence or commercial/industrial building closer than 25 feet to the construction work area, Keystone shall prepare a site-specific construction plan. The plan shall include:

- a description of construction techniques to be used;
- a dimensioned site plan that shows, at a minimum:
  - the location of the residence or commercial/industrial area in relation to the new pipeline;
  - the edge of the construction work area;
  - the edge of the new permanent construction right-of-way; and
  - other nearby topographical obstacles including landscaping, trees, structures, roads, parking areas, ditches, and streams; and
- a description of how Keystone would ensure that the trench is not excavated until the pipe is ready for installation and that the trench is backfilled immediately after pipe installation.

4.14.3 Landowner Complaint Resolution Procedure

Keystone shall implement a landowner complaint procedure as follows:

- Landowners should first contact the construction spread office to express their concern over restoration or mitigation of environmental damages on their property. The Construction Manager or his designated representative shall respond to the landowner within 24 hours of receipt of the phone call.

- If the landowner has not received a response or is not satisfied with the response, he can contact Keystone's representative at 1-877-880-4881. The landowner should expect a response within 48 hours.

4.15 Sand Hills Clean-up and Reclamation/Revegetation (Steele City Segment)

4.15.1 General

The Sand Hills are an extensive and biologically significant eco-region encompassing many square miles in South Dakota and northern Nebraska. This arid eco-region is an important ecosystem that consists of predominantly native prairie landscapes and supports a variety of uses such as livestock grazing, wildlife habitat and recreational opportunities. The Sand Hills consist of a collection of diverse habitats that vary from highly erosive windswept ridges and blowouts, to wet meadows and alkali lakes in valley bottoms.

4.15.2 Right-of-way Construction

- KXL will educate construction personnel regarding the fragility of Sand Hill's soils, and the necessity to strictly adhere to Project Best Management Practices (BMPs) designed to minimize impacts.
- Minor route re-alignments will be incorporated through the Sand Hills region to avoid particularly erosion-prone locations, such as ridgetops and existing blowouts as much as practicable.
- KXL will avoid highly saturated areas, such as wetland, to the maximum extent possible.
- Construction soil handling procedures will strive to reduce the width of disturbance to the native prairie landscape by adopting "Trench-line or Blade-width stripping procedures where practicable.
- Topsoil conservation will be conducted on all areas where excavation occurs.
- topsoil piles will be protected from erosion through matting, mulching, watering or tackifying as deemed practible.
- Traffic management limitations will be employed on specific areas possessing high erosion potential or sensitive habitat.

4.15.3 Right-of-Way Reclamation

- Native seed mixes will be developed with input from the local NRCS offices and through collaboration with regional experts. All seed will be certified noxious weed-free and will be calculated on a pure live seed (PLS) basis.

- Straw or native prairie hay may be used as mulch, applied to the right-of-way and crimped into the soil to prevent wind erosion. All mulch will be documented as noxious weed-free.
- Land imprinting may be employed to create impressions in the soil, thereby reducing erosion, improving moisture retention and creating micro-sites for seed germination.
- Sediment logs or straw wattles will be used in place of slope breakers (short terraces) that are constructed of soil. Using sediment logs will result in less soil disturbance to the right-of-way.
- Photodegradable matting will be applied on steep slopes or areas prone to extreme wind exposure such as north- or west-facing slopes and ridge tops. Biodegradable pins will be used in place of metal staples to hold the matting in place.
- Keystone work with landowners to evaluate fencing the right-of-way from livestock, or alternatively, provide compensation to rest a pasture until vegetation can become established. Management concerns such as livestock access to water or movement within a pasture would be incorporated as necessary.

4.15.4 Post-Construction

Keystone is committed to post-construction monitoring and repair and will monitor reclamation on the right-of-way for several years and repair erosion and reseed poorly revegetated areas as necessary. During monitoring, landowners are informed of our efforts and intentions.

A noxious weed management plan specific to the Sand Hills region will be established pending consultation with state and county experts

4.16 Operations and Maintenance

Operations and maintenance programs, such as vegetation management, pipeline maintenance, integrity surveys, and hydrostatic testing, may have an impact on the final reclamation of the right-of-way. To ensure the integrity of the facility and land surface reclamation of the right-of-way is maintained after completion of construction and that regulatory requirements are adhered to during operations, the following measures shall be implemented unless otherwise directed by Keystone in response to site-specific conditions or circumstances. All work shall be conducted in accordance with applicable permits.

- Keystone shall monitor the pipeline right-of-way and all stream crossings for erosion or other potential problems that could affect the integrity of the pipeline. Any erosion identified shall be reclaimed as expediently as practicable by Keystone or by compensating to the landowner to reclaim the area.

- Trench depressions on ditch line that may interfere with natural drainage, vegetation establishment, or land use shall be repaired as expediently as practicable by Keystone or by compensating the landowner to repair the area.
- Post-construction monitoring inspections shall be conducted after the first growing season to determine the success of revegetation. Areas which have not been successfully re-established shall be revegetated by Keystone or by compensation of the landowner to reseed the area. If, after the first growing season, revegetation is successful, no additional monitoring shall be conducted.
- In non-agricultural areas, revegetation shall be considered successful if, upon visual survey, the density and cover of non-nuisance vegetation are similar in density and cover to adjacent undisturbed lands.
- In agricultural areas, revegetation shall be considered successful if crop yields are similar to adjacent undisturbed portions of the same field.
- Restoration shall be considered successful if the surface condition is similar to adjacent undisturbed lands, construction debris is removed (unless requested otherwise by the landowner or land managing agency), revegetation is successful, and drainage has been restored.
- Weed control measures shall be implemented as required by any applicable plan and in conjunction with the landowner.
- Keystone shall be responsible for correcting tile line or irrigation system repairs that fail, provided those repairs were made by Keystone. Keystone shall not be responsible for tile line or irrigation system repairs which Keystone compensated the landowner to perform.
- When requested by owners in cultivated land, Keystone shall monitor the yield of land impacted by construction with the help of agricultural specialists. If yield deficiencies are indicated compared to yields on unaffected land, Keystone will compensate the landowner for reduced yields and shall implement procedures to return the land to equivalent capability.
- In residential areas, landowners may use the right-of-way provided they do not interfere with the rights granted to Keystone. Trees, bushes, structures, including houses, tool sheds, garages, poles, guy wires, catch basins, swimming pools, trailers, leaching fields, septic tanks, and any other objects not easily removable, shall not be permitted on the permanent construction right-of-way without the written permission of Keystone, because they could impair access for maintenance of the pipeline.
- Keystone shall maintain communication with the landowner and tenant throughout the operating life of the pipeline to allow expedient communication of issues and problems as they occur. Keystone shall provide the landowner with corporate contact information for these purposes. Keystone shall work with landowners to prevent excessive erosion on lands disturbed by construction. Reasonable methods shall be implemented to control erosion. These may not be implemented if the property across which the pipeline is constructed is bare cropland which the landowner intends to leave bare until the next crop is planted.

- If the landowner and Keystone cannot agree upon a reasonable method to control erosion on the landowner's property, the recommendations of the appropriate NRCS office shall be considered by Keystone and the landowner.

5.0 DRAIN TILE SYSTEMS

5.1 General

If underground drainage tile is damaged by the pipeline installation, it shall be repaired in a manner that ensures the tile line's proper operating condition at the point of repair. Keystone may elect to negotiate a fair settlement with the affected county or landowner for repair of the damaged drain tile. In the event the landowner chooses to have the damaged tile repaired by Keystone, the Contractor shall follow these guidelines and procedures to identify the location of drain tiles, to mitigate damages to drain tiles prior to and during construction, to repair drain tiles damaged during installation of the pipeline, to inspect the proper repair of drain tiles, and to provide post-construction monitoring to determine any impacts caused by repair of drain tiles. Since all public and private drain tile systems are unique, i.e., varying age, depth of cover, type of material, geometry on the land, etc., it is not possible to develop a standard procedure for resolving each county's or landowner's drain tile issues. These guidelines provide a basis on which to develop site specific methodology to mitigate damage and to repair drain tiles affected by construction of the Project. A typical right-of-way layout and typical orientation for crossing drain tiles is provided in Detail 25. Typical header and main crossovers are provided in Details 26 and 27. Actual measures will be developed based on site-specific information unique to specific installations. However, all work will be conducted in accordance with applicable permits.

5.2 Identification and Classification of Drain Tile Systems

Personnel shall attempt to identify and classify existing drain tile systems by meeting with local public officials and county engineers, and individual private landowners and tenants.

5.2.1 Publicly Owned Drain Tiles

Personnel shall identify and meet with the responsible county or local authority responsible for publicly owned drain tiles. Publicly owned drain tiles shall be identified and documented on the Project's 1" = 2000' USGS quad strip maps and additional data collected for input into an electronic spreadsheet by county, township, range, and section; responsible agency; and size, type, and depth of cover (if known). This data shall be cross-referenced to the centerline survey to be completed by Keystone. Additionally, any public records including maps or easement instruments on the drain tiles shall be acquired as well as any requirements of the local authority for installation of the pipeline.

5.2.2 Privately Owned Drain Tiles

Right-of-way agents shall meet with landowners and tenants of privately owned land along the route. As a minimum, the right-of-way agents shall ascertain the data concerning drain tiles outlined in a landowner questionnaire. The questionnaire requests data concerning: type of drain tile system; size, type of material, and depth of cover; preference for repair of drain tiles; and identification of local drain tile contractors. These data shall be collected into an electronic spreadsheet for utilization by right-of-way personnel in negotiating payments for easements and damages and by engineering or construction personnel for inclusion in specifications for the construction Contractor.

5.3 Mitigation of Damage to Drain Tile Systems

Keystone shall undertake mitigation measures to reduce damage to publicly and privately owned drain tile systems prior to and during installation of the pipeline.

5.3.1 Non-interference with Drain Tile

The Project shall be installed at a depth of cover and elevation so as not to interfere with the elevation and grade of existing drain tiles where practicable. Where not practicable, Keystone shall pursue alternative mitigation measures mutually acceptable to the landowner and jurisdictional agencies. Typically, the pipeline shall be installed below the elevation of drain tiles with a minimum clearance of 12 inches. Detail 25, Typical Right-of-Way Layout/Soil Handling, represents a typical drain tile crossing by the pipeline with additional temporary work space to facilitate handling of topsoil and trench spoil created by the additional depth of cover for the pipeline.

5.3.2 Non-disturbance of Drain Tile Mains

Publicly owned and privately owned drain tile mains shall be identified through the processes identified in Section 5.2. Drain tile mains are essential to the overall drainage system of a land area and if disturbed, may require excessive pumping/dewatering of the pipe trench unless temporarily repaired and maintained until permanently repaired.

Keystone shall review drain tile mains and consider their size, flow rate, type of material, depth of cover, and geographic location. If determined to be practicable and reasonable for construction, the drain tile main shall not be cut and repaired during mainline installation (a pipe section shall be left out and installed by a tie-in crew without damaging the drain tile main).

5.3.3 Relocation or Replacement of Existing Drain Tiles Prior to Construction

In many instances, drain tile systems that have been installed after the installation of adjacent existing pipelines were installed with “headers” parallel to the existing pipeline with periodic jumpovers as depicted on Detail 26, Header/Main Crossovers of Keystone XL Pipeline. The distance of these headers from the existing pipeline may vary.

Some of these drain tile headers may be most effectively relocated and/or replaced to the east of the Project. The existing header will be capped and made into a single drain tile as depicted on Detail 27, Relocate/Replace Drainage Header/Main. This could reduce the number of drain tile crossings on a particular landowner's property by a significant quantity, thereby reducing the risk that repairs will fail.

5.3.4 Future Drain Tiles/Systems

Keystone shall attempt to determine where public agencies and private landowners or tenants are proposing to install drain tile systems in the future. These locations shall be input into an electronic spreadsheet by county, township, range, and section; landowner or responsible public agency; and proposed size and depth of cover. Keystone shall endeavor to construct the pipeline at a depth and elevation to accommodate the future installation of the proposed drain tile systems.

5.3.5 Other Mitigation Measures

Other mitigation measures that may be implemented during installation of the pipeline are as follows:

- not removing topsoil from the working side of the construction right-of-way to prevent crushing of drain tile by heavy equipment;
- spreading ditch and spoil side topsoil (not subsoil) over the working side to provide additional soil depth to protect existing drain tiles;
- restricting the work of the pipe lower in crew if ground conditions are too wet to adequately support the heavy equipment;
- limiting travel of heavy equipment the working lane of the construction right-of-way where possible;
- limiting travel of heavy equipment to one pass over the drain tile per work crew where possible; and
- removing and replacing topsoil during drain tile replacement should tile be crushed on the working side of the right-of-way.

5.4 Responsibility for Repair of Drain Tile Systems

Temporary and permanent drain tile repairs shall be the responsibility of the Contractor. The physical repairs shall be made by qualified and experienced drain tile repair personnel.

5.4.1 Local Drain Tile Contractor Repair

Keystone shall identify and qualify local drain tile contractors in the geographical area of the pipeline route from interviews with local public officials, landowners, tenants, and drain tile contractors. The preferred responsibility for permanent repair of drain tiles shall be for the pipeline

Contractor to subcontract the supervision and repair to local reputable drain tile contractors acceptable to the landowners and tenants.

5.4.2 Pipeline Contractor Repair

In the event local drain tile contractors are not available to subcontract the supervision and repair, permanent repair shall be made with the Contractor's supervision, equipment, and labor.

5.4.3 Landowner/Tenant Repair

The landowner or tenant may agree to take responsibility for the permanent repair of his drain tiles if not precluded by regulatory agency. The landowner or tenant shall be requested to ensure his ability to coordinate and complete the drain tile repair in a timely manner to allow the pipeline Contractor to completely backfill the damaged drain tile for repair by landowner/tenant in the immediate future. Keystone shall require that its representative be present to ensure the permanent drain tile repairs are made in accordance with the minimum requirements of this manual.

5.5 Drain Tile Repairs

The Contractor shall endeavour to locate all tile lines within the construction right-of-way prior to and during installation so repairs can be made if necessary.

5.5.1 Temporary Repairs During Construction

Drain tiles damaged or cut during the excavation of the trench shall be marked with a lath and ribbon in the spoil bank. Care shall be taken to locate markers where the chance of disturbance shall be minimized and a written record maintained of each drain tile crossing. A work crew following the pipeline trench crew shall complete a temporary repair to allow continuing flow. Detail 28, Temporary Drain Tile Repair, depicts the materials and installation procedure to complete the temporary repair. If a drain tile line shall not be temporarily repaired, the open ends of the drain tile shall be screened to prevent entry of foreign materials and small animals.

5.5.2 Permanent Repairs

Permanent repairs shall be made for all drain tiles damaged by installation of the pipeline.

5.5.2.1 <u>Ditch Line Only Repairs</u>

If water is flowing through a damaged tile line, the tile line shall be immediately and temporarily repaired until such time that permanent repairs can be made. If tile lines are dry and water is not flowing, temporary repairs are not required if the permanent repair is made within 7 days of the time damage

occurred. The temporary repair shall be removed just prior to lowering in the pipeline.

Drain tiles must be permanently repaired before the pipeline trench is backfilled and within 14 days of construction completion, weather and soil conditions permitting. All tile lines shall be repaired with materials of the same or better quality as that which was damaged. The drain tile marker shall not be removed until the tile repairs have been inspected, approved, and accepted by Keystone's inspectors, the county inspectors, where applicable, and the landowner or tenant. Detail 29, Permanent Repair Method of Drain Tiles, depicts the minimum materials and installation procedure to complete a permanent repair.

5.5.2.2 Ditch Line and Temporary Work Space Repairs

Prior to making the permanent drain tile repair, the Contractor shall probe a segmented sewer rod with a plug that is not more than 15% smaller than the internal diameter of the drain tile to determine if additional damage has occurred to the drain tile. If the probe does not freely insert into the drain tile across the temporary workspace of pipeline construction, the Contractor shall excavate, expose, and repair the damaged drain tile to its original or better condition.

5.6 Inspection/Acceptance of Drain Tile Repairs

Drain tile repairs shall be inspected by Keystone construction inspectors, county inspectors, as applicable, and the landowner or tenant or his representative.

Keystone shall designate inspector(s) for the sole purpose and responsibility for inspection of all repairs of drain tiles. These inspectors shall be, if possible, employed from local drain tile installation contractors, local farmers with extensive drain tile experience, or previously employed or retired employees of local jurisdictions familiar with drain tile installation and repair. In the event that a sufficient quantity of inspectors from these sources is not available, Keystone shall conduct in-the-field training seminars on drain tile repair for additional inspection personnel.

Inspection personnel shall observe the permanent repair of all drain tiles to ensure the replacement drain tile is: (1) the proper size and type; (2) installed at the proper grade; (3) properly supported and backfill beneath the drain tile is properly placed and compacted; and (4) properly tied into the existing drain tile. The inspection shall be documented on the Drain Tile Inspection Report Form.

A drain tile repair shall not be accepted until Keystone's construction inspector and the landowner or tenant or designated representative approves the inspection form.

6.0 WETLAND CROSSINGS

6.1 General

Aboveground facilities shall not be located in a wetland, except where the location of such facilities outside of wetlands would preclude compliance with US Department of Transportation pipeline safety regulations.

Wetland boundaries shall be clearly marked in the field with signs and/or highly visible flagging during construction.

In the event a waterbody crossing is located within or adjacent to a wetland crossing, the measures of both Section 6 - Wetland Crossings and Section 7 - Waterbodies and Riparian Lands shall be implemented to the extent practicable.

A dry wetland typically has groundwater level some depth below the surface. Trench excavations typically are stable and normal in width. Equipment can traverse the wetland without the support of mats or timber riprap.

A standard wetland environment typically has soils that are saturated and non-cohesive. Difficult trenching conditions are likely resulting in excessively wide trenches. In these wetland environment types, supplemental support in the form of timber riprap or prefabricated equipment mats may be required for construction equipment to safely and efficiently operate.

A flooded wetland involves the presence of standing water over much of the wetland area. Equipment typically cannot traverse the wetland and must generally move around that portion of the area. Access is typically limited to marsh backhoes or equipment working from flexifloats or equivalents.

Keystone may allow modification of the following specifications as necessary to accommodate site-specific conditions or procedures. Any modifications must still comply with all applicable regulations and permits.

6.2 Easement and Workspace

The Contractor shall maintain wetland boundary markers during construction in all areas and until permanent seeding is complete in non-cultivated areas.

The width of the construction right-of-way shall be reduced to 85 feet or less in standard wetlands unless non-cohesive soil conditions require utilization of a greater width.

The Contractor shall locate extra work areas (such as staging areas and additional spoil storage areas) shall be at least 10 feet away from wetland boundaries, where topographic conditions permit.

The Contractor shall limit clearing of vegetation between extra work areas and the edge of the wetland to the construction right-of-way and limit the size of extra work areas to the minimum needed to construct the wetland crossing.

6.3 Vehicle Access and Equipment Crossing

The only access roads, other than the construction right-of-way, that the Contractor shall use in wetlands are those existing public roads and private roads acquired by Keystone from the landowner shown on the construction drawings.

To the extent practicable, the Contractor's construction equipment operating in saturated wetlands or wetlands with standing water shall be limited to that needed to clear the construction right-of-way, dig the trench, fabricate and install the pipeline, backfill the trench, and restore the construction right-of-way.

If equipment must operate within a wetland containing standing water or saturated soils, the Contractor shall use the following methods for equipment access unless otherwise approved by Keystone based on site-specific conditions:

- wide-track or balloon-tire construction equipment; and
- conventional equipment operated from timber and slash (riprap) cleared from the right-of-way, timber mats, or prefabricated equipment mats.

6.4 Temporary Erosion and Sediment Control

The Contractor shall install sediment barriers across the entire construction right-of-way immediately upslope of the wetland boundary at all standard wetland crossings, as necessary, to prevent sediment flow into the wetland. Sediment barriers must be properly maintained by the Contractor throughout construction and reinstalled as necessary. In the travel lane, these may incorporate removable sediment barriers or driveable berms. Removable sediment barriers can be removed during the construction day, but shall be re-installed after construction has stopped for the day or when heavy precipitation is imminent. The Contractor shall maintain sediment barriers until replaced by permanent erosion controls or restoration of adjacent upland areas is complete. The Contractor shall not install sediment barriers at wetlands designated as "dry" unless otherwise specified by Keystone.

Where standard wetlands are adjacent to the construction right-of-way, the Contractor shall install sediment barriers along the edge of the construction right-of-way as necessary to prevent a sediment flow into the wetland.

6.5 Wetland Crossing Procedures

The following general mitigative procedures shall be followed by the Contractor in all wetlands unless otherwise approved or directed by Keystone based on site-specific conditions. All work shall be conducted in accordance with applicable permits.

- limit the duration of construction-related disturbance within wetlands to the extent practicable;
- use no more than two layers of timber riprap to stabilize the construction right-of-way;

- cut vegetation off at ground level leaving existing root systems in place and remove it from the wetland for disposal;
- limit pulling of tree stumps and grading activities to directly over the trench line unless safety concerns require the removal of stumps from the working-side of the construction ROW;
- segregate a maximum of 12 inches of topsoil from the area disturbed by trenching in dry wetlands, where practicable;
- restore topsoil to its approximate original stratum, after backfilling is complete;
- dewater the trench in a manner to prevent erosion and heavily silt-laden flowing directly into any wetland or waterbody;
- remove all timber riprap and prefabricated equipment mats upon completion of construction;
- locate hydrostatic test manifolds outside wetlands and riparian areas to the maximum extent practicable;
- prohibit storing hazardous materials, chemicals, fuels, lubricating oils, or perform concrete coating activities in a wetland, or within 100 feet of any wetland boundary;
- perform all equipment maintenance and repairs upland locations at least 100 feet from waterbodies and wetlands;
- avoid parking equipment overnight within 100 feet of a watercourse or wetland;
- prohibit washing equipment in streams or wetlands;
- install trench breakers and/or seal the trench to maintain the original wetland hydrology, where the pipeline trench may drain a wetland;
- attempt to refuel all construction equipment in an upland area at least 100 feet from a wetland boundary (otherwise follow the procedures outlined in Section 3); and
- avoid sand blasting in wetlands to the extent practicable. If sandblasting is performed within a wetland, the Contractor shall place a tarp or suitable material in such a way as to collect as much waste shot as possible and dispose of the collected waste. The Contractor shall clean up all visible deposits of wastes and dispose of the waste at an approved disposal facility.

Specific procedures for each type of wetland crossing method are listed below and shall be designated on the construction drawings but may be modified depending on site conditions at the time of construction. All work shall be conducted in accordance with applicable permits.

6.5.1 Dry Wetland Crossing Method

Topsoil shall be segregated. Pipe stringing and fabrication may occur within the wetland adjacent to the trench line or adjacent to the wetland in a designated extra workspace.

The dry wetland crossing procedure depicted in Detail 8 shall be used where this type of wetland is identified on the construction drawings. The following are exceptions to standard wetland crossing methods:

- The width of the construction right-of-way for upland construction is maintained through the wetland.
- Where extra work areas (such as staging areas and additional spoil storage areas) are designated on the construction drawings, they may be placed no closer than 10 feet from the wetland's edge.
- If the wetland is cultivated, the topsoil shall be stripped using the trench and spoil side method at the same depth as the adjacent upland areas.
- Seeding requirements for agricultural lands shall be applied to farmed wetlands.

6.5.2 Standard Wetland Crossing Method

Topsoil stripping is impracticable due to the saturated nature of the soil. Pipe stringing and fabrication may occur within the wetland adjacent to the trench line or adjacent to the wetland in a designated extra workspace. Based upon the length of a standard wetland crossing and presence of sufficient water to float the pipe, the Contractor may elect to install a standard wetland crossing utilizing the “push/pull” method.

The standard wetland crossing procedure depicted in Detail 9 shall be used where this type of wetland is identified on the construction drawings.

Procedures unique to standard wetlands include:

- limiting construction right-of-way width to a maximum of 85 feet unless site conditions warrant a wider width;
- utilizing low-ground-pressure construction equipment or support equipment on timber riprap or timber mats; and
- installing sediment barriers across the entire right-of-way where the right-of-way enters and exits the wetland.

6.5.3 Flooded Push/Pull Wetland Crossing Method

Where standing surface water or high groundwater levels make trenching difficult, trench widths up to 35 feet are common. Topsoil stripping is impossible due to the flooded conditions. Pipe stringing and fabrication is required adjacent to the wetland in a designated extra workspace. Using floatation devices, the pipe string is pushed and pulled from the extra workspace to the trench.

The Push/Pull wetland crossing procedure as depicted in Detail 10 shall be used where water is sufficient to float the pipeline in the trench and other site conditions allow.

Clean metal barrels or Styrofoam floats may be used to assist in the flotation of the pipe. Metal banding shall be used to secure the barrels or floats to the pipe. All barrels, floats, and banding shall be recovered and removed upon completion of lower in. Backfill shall not be allowed before recovery of barrels, floats, and banding.

6.6 Restoration and Reclamation

All timber riprap, timber mats, and prefabricated equipment mats and other construction debris shall be removed upon completion of construction. As much as is feasible, the Contractor shall replace topsoil and restore original contours with no crown over the trench. Any excess spoil shall be removed from the wetland. The Contractor shall stabilize wetland edges and adjacent upland areas by establishing permanent erosion control measures and revegetation, as applicable, during final clean up.

For each standard wetland crossed, the Contractor shall install a permanent slope breaker and trench breaker at the base of slopes near the boundary between the wetland and adjacent upland areas. The Contractor shall locate the trench breaker immediately upslope of the slope breaker.

In the absence of detailed revegetation plans or until the appropriate seeding season for permanent wetland vegetation in standard wetlands, the Contractor shall apply a temporary cover crop of annual ryegrass or oats on the construction right-of-way at a rate adequate for germination and ground cover unless standing water is present. The Contractor shall apply the temporary cover crop during final cleanup. For farmed wetlands, the Contractor shall apply seeding requirements for agricultural lands or as required by the landowner.

The Contractor shall not use fertilizer, lime, or mulch in wetlands unless required in writing by the appropriate land management agency.

All wetland areas within conservation lands or easements will be restored to a level consistent with any additional criteria established by the relevant managing agency.

For FWS easement wetlands, topographic surveys will be conducted prior to construction through the wetland. Sediment barriers will be installed at FWS easement wetlands and to protect wetlands adjacent to the right-of-way where determined appropriate by the environmental inspector based on field conditions. During restoration of the FWS wetlands, final grades must be restored to within 0.1 foot of original elevations.

7.0 WATERBODIES AND RIPARIAN AREAS

7.1 General

The Contractor shall comply with requirements of all permits issued for the waterbody crossings by federal, state or local agencies.

Waterbody includes any natural or artificial stream, river, or drainage with perceptible flow at the time of crossing, and other permanent waterbodies such as ponds and lakes:

- Minor Waterbody includes all waterbodies less than or equal to 10 feet wide at the water's edge at the time of construction.
- Intermediate Waterbody includes all waterbodies greater than 10 feet wide but less than or equal to 100 feet wide at the water's edge at the time of construction.
- Major Waterbody includes all waterbodies greater than 100 feet wide at the water's edge at the time of construction.

In the event a waterbody crossing is located within or adjacent to a wetland crossing, the Contractor, to the extent practicable, shall implement the provisions of both Section 6 - Wetland Crossings and Section 7 - Waterbodies and Riparian Areas.

The Contractor shall supply and install advisory signs in a readily visible location along the construction right-of-way at a distance of approximately 100 feet on each side of the crossing and on all roads which provide direct construction access to waterbody crossing sites. Signs shall be supplied, installed, maintained, and then removed upon completion of the Project. Additionally, signs shall be supplied and installed by the Contractor on all intermediate and major waterbodies accessible to recreational boaters warning boaters of pipeline construction operations.

The Contractor shall not store hazardous materials, chemicals, fuels, lubricating oils, or perform concrete coating within 100 feet of any waterbody. The Contractor shall not refuel construction equipment within 100 feet of any waterbody. If the Contractor must refuel construction equipment within 100 feet of a waterbody, it must be done in accordance with the requirements outlined in Section 3. All equipment maintenance and repairs will be performed in upland locations at least 100 feet from waterbodies and wetlands. All equipment parked overnight shall be at least 100 feet from a watercourse or wetland, if possible. Equipment shall not be washed in streams or wetlands.

Throughout construction, the Contractor shall maintain adequate flow rates to protect aquatic life and to prevent the interruption of existing downstream uses.

Keystone may allow modification of the following specifications as necessary to accommodate specific situations or procedures. Any modifications must comply with all applicable regulations and permits. Keystone will complete site-specific

crossing plans for certain waterbody crossings if required by the applicable regulatory agencies during federal or state permitting processes.

7.2 Easement and Work Space

The permanent easement, temporary work space, additional temporary work space, and any special restrictions shall be depicted on the construction drawings. The work shall be contained within these areas and be limited in size to the minimum required to construct the waterbody crossing.

The Contractor shall locate all extra work areas (such as staging areas and additional spoil storage areas) at least 10 feet from the water's edge if practicable.

At all waterbody crossings, the Contractor shall install flagging across the construction right-of-way at least 10 feet from the water's edge prior to clearing and ensure that riparian cover is maintained where practicable during construction.

7.3 Vehicle Access and Equipment Crossings

The Contractor shall inspect equipment for fluid leaks prior to entering or crossing over waterbodies.

Equipment bridges shall be installed at all flowing waterbodies. Equipment crossings shall be constructed as described in Details 16, 17 and/or 18.

Equipment crossings shall be perpendicular to drainage bottoms wherever possible.

Erosion and sediment control barriers will be installed and maintained around vehicle access points as necessary to prevent sediment from reaching the waterway.

The Contractor shall be responsible for the installation, maintenance, and removal of all temporary access crossings including portable bridges, bridges made from timber or mats, flumes, culverts, sand bags, subsoil, coarse granular material, and riprap.

The Contractor shall ensure that culverts and flumes are sized and installed of sufficient diameter to accommodate the existing flow of water and those that may potentially be created by sudden runoffs. Flumes shall be installed with the inlet and outlet at natural grade if possible.

Where bridges, culverts or flumes are installed across the work area, the Contractor shall be responsible for maintaining them (e.g. preventing collapse, clogging or tilting). All flumes and culverts shall be removed as soon as possible upon completion of construction.

The width of the temporary access road across culverts and flumes and the design of the approaches and ramps shall be adequate for the size of vehicle and equipment access required. The ramps shall be of sufficient depth and constructed to prevent collapse of the flumes, and the approaches on both sides of the flume shall be feathered.

Where culverts are installed for access, the culvert shall be of sufficient length to convey the stream flow through the construction zone.

The Contractor shall maintain equipment bridges to prevent soil from entering the waterbody.

7.4 Waterbody Crossing Methods

Construction methods pertinent to waterbody crossings are presented below. Selection of the most appropriate method at each crossing shall be depicted on the construction drawings but may be amended or changed based on site-specific conditions (i.e., environmental sensitivity of the waterbody, depth, and rate of flow, subsurface soil conditions, and the expected time and duration of construction) at the time of crossing. Construction will involve dry-ditch techniques at crossings where the timing of construction does not adequately protect environmentally sensitive waterbodies, as determined by the appropriate regulatory authority. Where required, horizontal directional drilling (HDD) will be used at designated major and sensitive waterbodies crossings. Each waterbody crossing shall be accomplished using one of the following construction methods:

- Non-flowing Open Cut Crossing Method - (Detail 11)
- Flowing Open Cut Crossing Method – Minor, Intermediate or Major Waterbody - (Detail 12)
- Flowing Stream Crossing – Dry Flume Method - (Detail 13)
- Flowing Stream Crossing – Dry Dam-and-Pump Method - (Detail 14)
- Horizontal Directional Drill Crossing - (Detail 15)
- Horizontal Bore Crossing - (Detail 21)

In conjunction with the appropriate jurisdictional agency, Keystone will develop specific crossing plans for major water bodies that contain recreationally or commercially important fisheries, or are classified as special use. Keystone will consult with state fisheries agencies with respect to applicable construction windows for each crossing and develop specific construction and crossing methods for open cuts in conjunction with USACE permitting and USFWS consultation.

7.4.1 Non-flowing Open Cut Crossing Method

The Contractor shall utilize the Non-flowing Open Cut Crossing Method (Detail 11) for all waterbody crossings (ditches, gullies, drains, swales, etc.) with no perceptible flow at the time of construction. Should site conditions change and the waterbody is flowing at the time of

construction, the Contractor shall install the crossing utilizing the Flowing Open Cut Crossing Method (Detail 12) unless otherwise approved by Keystone.

7.4.2 Flowing Open Cut Crossing Method of Minor, Intermediate, and Major Waterbodies

For minor waterbody crossings, except where the flume method is used, the Contractor shall complete construction in the waterbody (not including blasting, if required) as shown on Detail 12 within 24 hours if practicable.

For intermediate waterbodies, the Contractor shall attempt to complete trenching and backfill work within the waterbody (not including blasting if required) within 48 hours if practicable as shown on Detail 12.

The Contractor shall construct each major waterbody crossing in accordance with a site-specific plan as shown in the construction drawings. The Contractor shall complete in-stream construction activities as expediently as practicable.

7.4.3 Flowing Stream Crossing – Dry Flume Method

Where required, the Contractor shall utilize the Flowing Open Cut Crossing – Dry Flume Method as shown on Detail 13 with the following "dry ditch" techniques:

- Flume pipe shall be installed after blasting (if necessary), but before any trenching.
- Sand bag, sand bag and plastic sheeting diversion structure, or equivalent shall be used to develop an effective seal and to divert stream flow through the flume pipe (some modifications to the stream bottom may be required in order to achieve an effective seal).
- Flume pipe(s) shall be aligned to prevent bank erosion and streambed scour.
- Flume pipe shall not be removed during trenching, pipe laying, or backfilling activities, or initial streambed restoration efforts.
- All flume pipes and dams that are not also part of the equipment bridge shall be removed as soon as final clean up of the stream bed and bank is complete.

7.4.4 Flowing Stream Crossing – Dry Dam-and-Pump Method

Where specified in the construction drawings, the Contractor shall utilize the Flowing Open Cut Crossing – Dry Dam-and-Pump Method as shown on Detail 14. The dam-and-pump crossing method shall meet the following performance criteria:

- sufficient pumps to maintain 1.5 times the flow present in the stream at the time of construction;

- at least one back up pump available on site;
- dams constructed with materials that prevent sediment and other pollutants from entering the waterbody (e.g., sandbags or clean gravel with plastic liner);
- screen pump intakes installed;
- streambed scour prevented at pump discharge; and
- dam and pumps shall be monitored to ensure proper operation throughout the waterbody crossing.

7.4.5 Horizontal Directional Drill Crossings

Where required, the horizontal directional drill method as shown on Detail 15 shall be utilized for designated major and sensitive waterbodies. The Contractor shall construct each directional drill waterbody crossing in accordance with a site specific plan as shown in the construction drawings.

Drilling fluids and additives utilized during implementation of a directional drill shall be non-toxic to the aquatic environment.

The Contractor shall develop a contingency plan to address a frac-out during a directional drill. The plan shall include instructions for monitoring during the directional drill and mitigation in the event that there is a release of drilling fluids. Additionally, the waterbody shall be monitored downstream by the Contractor for any signs of drilling fluid.

The Contractor shall dispose of all drill cuttings and drilling mud at a Keystone-approved location. Disposal options may include spreading over the construction right-of-way in an upland location approved by Keystone or hauling to an approved licensed landfill or other site approved by Keystone.

7.4.6 Horizontal Bore Crossings

Where required, the horizontal bore method as shown on Detail 21 shall be utilized for crossing waterbodies. The Contractor shall construct each horizontal bore waterbody crossing in accordance with a site specific plan as shown in the construction drawings.

7.5 Clearing

Except where rock is encountered and at non-flowing open cut crossings, all necessary equipment and materials for pipe installation must be on site and assembled prior to commencing trenching in a waterbody. All staging areas for materials and equipment shall be located at least 10 feet from the waterbody edge. The Contractor shall preserve as much vegetation as possible along the waterbody banks while allowing for safe equipment operation.

Clearing and grubbing for temporary vehicle access and equipment crossings shall be carefully controlled to minimize sediment entering the waterbody from the construction right-of-way.

Clearing and grading shall be performed on both sides of the waterbody prior to initiating any trenching work. All trees shall be felled away from watercourses.

Plant debris or soil inadvertently deposited within the high water mark of waterbodies shall be promptly removed in a manner that minimizes disturbance of the waterbody bed and bank. Excess floatable debris shall be removed above the high water mark from areas immediately above crossings.

Vegetation adjacent to waterbody crossings by horizontal directional drill or boring methods shall not be disturbed except by hand clearing as necessary for drilling operations.

7.6 Grading

The construction right-of-way adjacent to the waterbody shall be graded so that soil is pushed away from the waterbody rather than towards it whenever possible.

In order to minimize disturbance to woody riparian vegetation within extra workspaces adjacent to the construction right-of-way at waterbody crossings, the Contractor shall minimize grading and grubbing of waterbody banks. To the extent practicable, grubbing shall be limited to the ditch line plus an appropriate width to accommodate safe vehicle access and the crossing.

7.7 Temporary Erosion and Sediment Control

The Contractor shall install and maintain sediment barriers across the entire construction right-of-way at all flowing waterbody crossings.

The Contractor shall install sediment barriers immediately after initial disturbance of the waterbody or adjacent upland. Sediment barriers must be properly maintained throughout construction and reinstalled as necessary (such as after backfilling of the trench) until replaced by permanent erosion controls or restoration of adjacent upland areas is complete.

Where waterbodies are adjacent to the construction right-of-way, the Contractor shall install and maintain sediment barriers along the edge of the construction right-of-way as necessary to contain spoil and sediment within the construction right-of-way.

7.8 Trenching

The following requirements apply to all waterbody crossings except those being installed by the non-flowing open cut crossing method.

All equipment and materials shall be on site before trenching in the active channel of all minor waterbodies containing state-designated fisheries, and in

intermediate and major waterbodies. All activities shall proceed in an orderly manner without delays until the trench is backfilled and the stream banks stabilized. The Contractor shall not begin in-stream activity until the in-stream pipe section is complete and ready to be installed in the waterbody.

The Contractor shall use trench plugs at the end of the excavated trench to prevent the diversion of water into upland portions of the pipeline trench and to keep any accumulated upland trench water out of the waterbody. Trench plugs must be of sufficient size to withstand upslope water pressure.

The Contractor shall conduct as many in-stream activities as possible from the banks of the waterbodies. The Contractor shall limit the use of equipment operating in waterbodies to that needed to construct each crossing.

The Contractor shall place all spoil from minor and intermediate waterbody crossings and upland spoil from major waterbody crossings in the construction right-of-way at least 10 feet from the water's edge or in additional extra work areas. No trench spoil, including spoil from the portion of the trench across the stream channel, shall be stored within a waterbody unless the crossing cannot be reasonably completed without doing so.

The Contractor shall install and maintain sediment barriers around spoil piles to prevent the flow of spoil into the waterbody.

Spoil removed during ditching shall be used to backfill the trench usually with a backhoe, clamshell, or a dragline working from the waterbody bank. Sand, gravel, rockshield, or fill padding shall be placed around the pipe where rock is present in the channel bottom.

7.9 Pipe Installation

The following requirements apply to all waterbody crossings except those being installed by the non-flowing open cut crossing method.

A "free stress" pipe profile shall be used at all minor, intermediate, and major waterbodies with gradually sloping stream banks. The "box bend" pipe profile shall be used for intermittent and major waterbodies with steep stream banks.

The trench shall be closely inspected to confirm that the specified cover and adequate bottom support can be achieved, and shall require Keystone approval prior to the pipe being installed. Such inspections shall be performed by visual inspection and/or measurement by a Keystone representative. In rock trench, the ditch shall be adequately padded with clean granular material to provide continuous support for the pipe.

The pipe shall be pulled into position or lowered into the trench and shall, where necessary, be held down by suitable negative buoyancy control, as-built recorded and backfilled immediately to prevent the pipe from floating.

The Contractor shall provide sufficient approved lifting equipment to perform the pipe installation in a safe and efficient manner. As the coated pipe is lowered in,

it shall be prevented from swinging or rubbing against the sides of the trench. Only properly manufactured slings, belts, and cradles suitable for handling coated pipe shall be used. All pipes shall be inspected for coating flaws and/or damage as it is being lowered into the trench. Any damage to the pipe or coating shall be repaired.

7.10 Backfilling

The following requirements apply to all waterbody crossings except those being installed by the non-flowing open cut crossing method.

Trench spoil excavated from waterbodies shall be used to backfill the trench across waterbodies.

After lowering in is complete, but before backfilling, the line shall be re-inspected to ensure that no skids, brush, stumps, trees, boulders, or other debris is in the trench. If discovered, such materials or debris shall be removed from the trench prior to backfilling.

For each major waterbody crossed, the Contractor shall install a trench breaker at the base of slopes near the waterbody unless otherwise directed by Keystone based on site specific conditions. The base of slopes at intermittent waterbodies shall be assessed on site and trench breakers installed only where necessary.

Slurred muck or debris shall not be used for backfill. At locations where the excavated native material is not acceptable for backfill or must be supplemented, the Contractor shall provide granular material approved by Keystone.

If specified in the construction drawings, the top of the backfill in the stream shall be armored with rock riprap or bio-stabilization materials as appropriate.

7.11 Stabilization and Restoration of Stream Banks and Slopes

The Contractor will restore the contours of the bed and banks of waterways immediately after pipe installation and backfill, except over the travel lane. Travel lanes and bridges may stay in place until hydrostatic testing and cleanup are complete. All materials used to support construction activities will be removed from waterbodies and wetlands, including, but not limited to, flumes, mats, plastic sheeting, and sandbags.

The stream bank contour shall be re-established. All debris shall be removed from the streambed and banks. Stream banks shall be stabilized and temporary sediment barriers shall be installed within 24 hours of completing the crossing if practicable.

Approach slopes shall be graded to an acceptable slope for the particular soil type and surface run off controlled by installation of permanent slope breakers. Where considered necessary, the integrity of the slope breakers shall be ensured by lining with erosion control blankets.

Immediately following reconstruction of the stream banks, the Contractor shall install seed and flexible channel liners on waterbody banks as shown in Detail 19.

If the original stream bank is excessively steep and unstable or flow conditions are severe, or if specified on the construction drawings, the banks shall be stabilized with rock riprap, gabions, stabilizing cribs, or bio-stabilization measures to protect backfill prior to reestablishing vegetation.

Stream bank riprap structures shall consist of a layer of stone, underlain with approved filter fabric or a gravel filter blanket in accordance with Detail 20. Riprap shall extend from the stabilized streambed to the top of the stream bank. Where practicable, native rock shall be utilized.

Bio-stabilization techniques which may be considered for specific crossings are shown in Details 23 and 24.

The Contractor shall remove equipment bridges as soon as possible after final clean up.

8.0 HYDROSTATIC TESTING

8.1 Testing Equipment Location

The Contractor shall provide for the safety of all pipeline construction personnel and the general public during hydrostatic test operations by placing warning signs in populated areas.

The Contractor shall locate hydrostatic test manifolds 100 feet outside wetlands and riparian areas to the maximum extent practicable.

8.2 Test Water Source and Discharge Locations

Keystone is responsible for acquiring all permits required by federal, state and local agencies for procurement of water and for the discharge of water used in the hydrostatic testing operation. Keystone shall provide the Contractor with a copy of the appropriate withdrawal/discharge permits for hydrostatic test water. The Contractor shall keep water withdrawal/discharge permits on site at all times during testing operations.

Any water obtained or discharged shall be in compliance with permit notice requirements and with sufficient notice for Keystone's Testing Inspector to make water sample arrangements prior to obtaining or discharging water. Keystone will obtain water samples for analysis from each source before filling the pipeline. In addition, water samples will be taken prior to discharge of the water, as required by state and federal permits.

In some instances sufficient quantities of water may not be available from the permitted water sources at the time of testing. Withdrawal rates may be limited as stated by the permit. Under no circumstances shall an alternate water source be used without prior authorization from Keystone.

The Contractor shall be responsible for obtaining any required water analyses from each source to be used in sufficient time to have a lab analysis performed prior to any filling operations. The sample bottle shall be sterilized prior to filling with the water sample. The analysis shall determine the pH value and total suspended solids. Each bottle shall be marked with:

- source of water with pipeline station number;
- date taken;
- laboratory order number; and
- name of person taking sample.

Staging/work areas for filling the pipeline with water will be located a minimum of 100 feet from the waterbody or wetland boundary if topographic conditions permit. The Contractor will install temporary sediment filter devices adjacent to all streams to prevent sediments from leaving the construction site.

The Contractor shall screen the intake hose to prevent the entrainment of fish or debris. The hose shall be kept at least 1 foot off the bottom of the waterbody. Refueling of construction equipment shall be conducted a minimum distance of 100 feet from the stream or a wetland. Pumps used for hydrostatic testing within 100 feet of any waterbody or wetland shall be operated and refueled in accordance with Section 3.

During hydrostatic test water withdrawals, the Contractor will maintain adequate flow rates in the waterbody to protect aquatic life and provide for downstream uses, in compliance with regulatory and permit requirements.

The Contractor shall not use chemicals in the test water. The Contractor shall not discharge any water containing oil or other substances that are in sufficient amounts as to create a visible color film or sheen on the surface of the receiving water.

Potential hydrostatic water sources for the Steele City, Gulf Coast segments, and Houston Lateral are as follows:

Table 1 – Steele City Segment Drainage Basins and Water Sources

Drainage Basins & Water Sources	Location Where Pipeline Crosses Water Source (Mile Post)
Frenchman Creek	25
Willow Creek	40
Milk River	82
Missouri River	88
Redwater River	146
Yellowstone River	195

Drainage Basins & Water Sources	Location Where Pipeline Crosses Water Source (Mile Post)
Cabin Creek	201
Sandstone Creek	244
Little Beaver Creek	262
Boxelder Creek	281
Little Missouri River	291
South Fork Grand River	317
Clarks Fork Creek	323
North Fork Moreau River	356
South Fork Moreau River	364
Cheyenne River	425
Bad River	480
Dry Creek	493
White River	535
Cottonwood Creek	541
Buffalo Creek	594
Keya Paha River	598
Spring Creek	602
Niobrara River	613
North Branch Elkhorn River	627
Elkhorn River	628
South Fork Elkhorn River	658
Cedar River	695
Loup River	738
Prairie Creek	745
Platte River	754
Big Blue River	763
Beaver Creek	778
West Fork Big Blue River	787
Turkey Creek	807
South Fork Swan Creek	824

Table 2 – Gulf Coast Segment Drainage Basins and Water Sources

Drainage Basins & Water Sources	Location Where Pipeline Crosses Water Source (Mile Post)
North Canadian River	39
Canadian River	75
Red River	155
Bois D'Arc Creek	161
North Sulphur River	190
South Sulphur River	200
Sabine River	262
East Fork Angelina	312
Angelina	332
Neches River	366
Menard Creek	393
Hillebrandt Bayou	469

Table 3 – Houston Lateral Segment Drainage Basins and Water Sources

Drainage Basins & Water Sources	Location Where Pipeline Crosses Water Source (Mile Post)
Trinity River	22
San Jacinto River	44

Selected road, railroad, and river crossing pipe sections may be specified to be pre-tested for a minimum of 4 hours. The water for pre-testing of any road and railroad crossings shall be hauled by a tanker truck from an approved water source. Water for pre-testing of a river crossing may be hauled or taken from the respective river if it is an approved water source. Since the volume of water utilized in these pre-tests shall be relatively small, the water shall be discharged overland along the construction right-of-way and allowed to soak into the ground utilizing erosion and sediment control mitigative measures.

Selection of final test water sources will be determined based on site conditions at the time of construction and applicable permits.

8.3 Filling the Pipeline

After final positioning of the pipe, the Contractor shall fill the pipe with water. Pipe ends shall not be restrained during the fill. The fill pump shall be set on a metal catch pan of sufficient dimensions to contain all leaking lubricants or fuel and prevent them from entering the water source. The suction inlet must be placed in a screened enclosure located at a depth that shall not allow air to be

drawn in with the water. The screened enclosure shall be such that the fill water is free of organic or particulate matter.

The Contractor shall provide a filter of the backflushing or cartridge type with a means of cleaning without disconnecting the piping. The filter shall have the specifications of 100 mesh screen. If the cartridge type is used, a sufficient quantity of cartridges shall be on hand at the filter location. The Contractor shall install the filter between the fill pump and the test header. The Contractor shall be responsible for keeping the backflush valve on the filter closed during the filling operation. The Contractor shall be responsible for the proper disposal of materials backflushed from the filter or filter cartridges. The Contractor shall not be allowed to backflush the filter into the stream or other water source.

During water-filling of the pipeline, the Contractor shall employ fill pumps capable of injecting water into the pipeline at a maximum rate of approximately 0.7 to 1.0 mile per hour, except as limited by permits or the maintenance of adequate flow rates in the waterbody, as follows:

Nominal OD	Max GPM
36”	3000

The Contractor shall maintain flow rates as necessary to protect aquatic life, provide for all waterbody uses, and provide for downstream withdrawals of water by existing users.

In waterbodies where sensitive species are located, Keystone will generally avoid withdrawal of hydrostatic test water until after August 1, unless specific approval is obtained in advance from the appropriate regulatory or resource agencies. In areas where zebra mussels are known to occur, all equipment used during the hydrostatic test withdrawal and discharge will be thoroughly cleaned before being used at subsequent hydrostatic test locations to prevent the transfer of zebra mussels or their larvae (veligers) to new locations.

8.4 Dewatering the Pipeline

The Contractor shall comply with state-issued NPDES permits for discharging test water.

The Contractor shall not discharge any water containing oil or other substances that are in sufficient amounts as to create a visible color film on the surface of the receiving water.

The Contractor shall not discharge into state-designated exceptional value waters, waterbodies which provide habitat for federally listed threatened or endangered species, or waterbodies designated as public water supplies, unless appropriate federal, state, and local permitting agencies grant written permission. To avoid impacts from introduced species, no inter-basin transfers (discharge) of hydrostatic test water will occur.

The discharge operation will be monitored and water samples will be taken prior to the beginning of the discharge to ensure that it complies with the Project and permit requirements. If required by state permits, additional water quality testing will be conducted during discharge, in accordance with permit conditions.

The Contractor shall calculate, record, and provide to Keystone the day, date, time, location, total volume, maximum rate, and methods of all water discharged to the ground or to surface water in association with hydrostatic testing.

The Contractor shall regulate the pig velocity discharge rate (3000 gpm maximum), use energy dissipation devices, and install sediment barriers, as necessary, to prevent erosion, streambed scour, suspension of sediments, or excessive stream flow. Water must be disposed of using good engineering judgment so that all federal, state, and local environmental standards are met. Dewatering lines shall be of sufficient strength and be securely supported and tied down at the discharge end to prevent whipping during this operation.

To reduce the velocity of the discharge, The Contractor shall utilize an energy-dissipating device described as follows:

8.4.1 Splash Pup

A splash pup consists of a piece of large diameter pipe (usually over 20" outside diameter) of variable length with both ends partially blocked that is welded perpendicularly to the discharge pipe. As the discharge hits against the inside wall of the pup, the velocity is rapidly reduced and the water is allowed to flow out either end. A variation of the splash pup concept, commonly called a diffuser, incorporates the same design, but with capped ends and numerous holes punched in the pup to diffuse the energy.

8.4.2 Splash Plate

The splash plate is a quarter section of 36-inch pipe welded to a flat plate and attached to the end of a 6-inch discharge pipe. The velocity is reduced by directing the discharge stream into the air as it exits the pipe. This device is also effective for most overland discharge.

8.4.3 Plastic Liner

In areas where highly erodible soils exist or in any low flow drainage channel, it is a common practice to use layers of visqueen (or any of the new construction fabrics currently available) to line the receiving channel for a short distance. One anchoring method may consist of a small load of rocks to keep the fabric in place during the discharge. Additional best management practices, such as the use of plastic sheeting or other material to prevent scour, will be used as necessary to prevent excessive sedimentation during dewatering.

8.4.4 Straw Bale Dewatering Structure

Straw bale dewatering structures are designed to dissipate and remove sediment from the water being discharged. Straw bale structures are used for on land discharge of wash water and hydrostatic test water and in combination with other energy dissipating devices for high volume discharges. A straw bale dewatering structure is shown In Detail 6. A dewatering filter bags may be sued as an alternative to show bale dewatering structures. A dewatering filter bag is shown in Detail 5.

Typical Drawing Index

Detail 1	Typical Silt Fence Barrier
Detail 2	Typical Straw or Hay Bail Barrier
Detail 3	Permanent Slope Breakers (Water Bars)
Detail 4	Erosion Control Matting Installation
Detail 5	Typical Dewatering Filter Bag
Detail 6	Typical Straw Bale Dewatering Structure
Detail 7	Typical Permanent Trench Breakers
Detail 8	"Dry" Wetland Crossing Method
Detail 9	Standard Wetland Crossing Method
Detail 10	Push/Pull Wetland Crossing Method
Detail 11	Typical Open Cut Wet Crossing Method Non-Flowing Waterbody
Detail 12	Typical Open Cut Wet Crossing Method Flowing Waterbody
Detail 13	Typical Dry Flume Crossing Method
Detail 13a	Typical Dry Flume Crossing Method
Detail 14	Typical Dam and Pump Crossing
Detail 14a	Typical Dam and Pump Crossing
Detail 15	Typical Horizontal Drill (HDD) Site Plan & Profile
Detail 16	Typical Temporary Bridge Crossing
Detail 17	Typical Flume Bridge Crossing
Detail 18	Typical Railcar Bridge Crossing
Detail 19	Flexible Channel Liner Installation
Detail 20	Typical Rock Rip-Rap
Detail 21	Typical Road Bore Crossing
Detail 23	Streambank Reclamation - Log Wall
Detail 24	Streambank Reclamation - Vegetated Geotextile Installation
Detail 25	Typical ROW Layout/Soil Handling
Detail 26	Header/Main Crossovers of Pipeline
Detail 27	Relocate/Replace Drainage Header/Main
Detail 28	Temporary Drain Tile Repair
Detail 29	Permanent Repair Method of Drain Tiles
Detail 30	Equipment Cleaning Station Detail
Detail 31	Equipment Wash Station Detail

NOTE: **The following typical drawings are included for ease of reference.**

- Details 1 through 31 can be found in the Construction Mitigation and Reclamation Plan

REVISIONS | 1 | 11.05.08 | REVISED TITLES, ADDED/DEL. DETAILS

G:\2000Drafting and GIS\CADFiles\Drawings\Typical_Details\20081104\Detail_Index.dwg 11/6/2008 10:46:33 AM CST

TransCanada
In business to deliver

KEYSTONE XL PROJECT

PREPARED BY:
TROW ENGINEERING CONSULTANTS, INC.
7505 NW Tiffany Springs Pkwy., Suite 400
Northpointe Circle I
Kansas City, MO 64153
Phone: 1-816-801-7063
Fax: 1-816-801-7048
Trow

ORIGINATOR: JOE A. NELSON (NAME) 9/08/08 (DATE)

CHECKED BY: | APPROVED BY:

FIA # | CHAINAGE: | DISCIPLINE #

TITLE: DETAIL INDEX

SCALE: N.T.S. | DWG No: XL-00-ML-7000-500 | REV: 1

LAST PLOT DATE: Thu, 06 Nov 2008 - 10:49am

CADD DRAWING: DO NOT MAKE MANUAL REVISIONS PLOTTED SIZE: ANSI A (8.5x11)

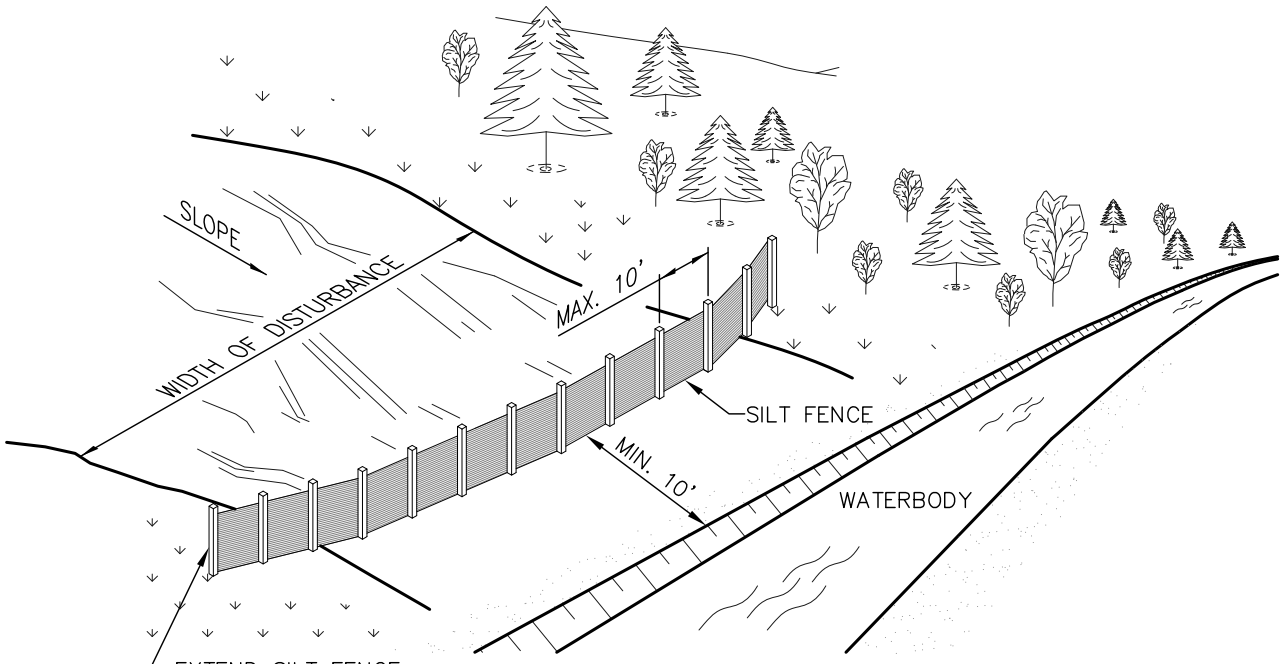

PLAN

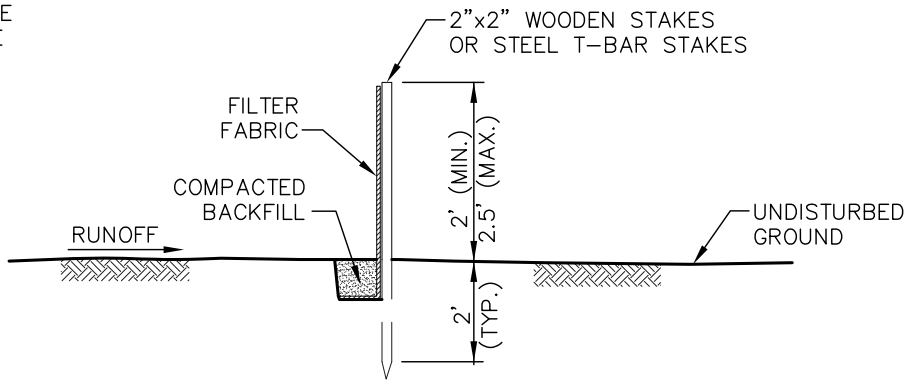

SECTION "A-A"

NOTES:

1. MATERIAL SHOULD BE WOVEN GEOTEXTILE FABRIC SUCH AS EXXON GTF 180 OR MIRAFI 600X, OR AN APPROVED EQUIVALENT. SECONDARY REINFORCEMENT, SUCH AS A CONSTRUCTION BARRIER FENCE OR WIRE MESH CAN ALSO BE USED BEHIND THE FILTER FABRIC.
2. SILT FENCE TO BE REINFORCED WITH 2"x2" WOODEN STAKES OR STEEL T-BAR STAKES PLACED EVERY 8' OR CLOSER AS CONDITIONS REQUIRE.
3. ATTACH FILTER FABRIC AT EACH POST AT A MINIMUM OF 3 LOCATIONS.
4. THE FILTER FABRIC MINIMUM LENGTH OF 1' IS TO BE ANCHORED IN A TRENCH WITH WELL COMPACTED BACKFILL OVER THE FABRIC TO PREVENT UNDERMINING.
5. TO ELIMINATE POSSIBLE END FLOW, BOTH ENDS OF THE SILT FENCE SHALL BE TURNED AND EXTENDED UPSLOPE.
6. SILT FENCES ARE TO BE CHECKED AND MAINTAINED ON A REGULAR BASIS. REMOVE ANY BUILD-UP OF SEDIMENT.
7. WHERE ANCHORING CONDITIONS FOR THE SILT FENCE ARE POOR, PLACE STRAW BALES ON DOWNSTREAM SIDE OF THE SILT FENCE.
8. INSTALLATION TO BE MODIFIED BY THE PROJECT AS NECESSARY TO SUIT ACTUAL SITE CONDITIONS.

REVISIONS | 1 | 11.04.08 Updated drawing notes

G:\2000Drafting and GIS\CADFiles\Drawings\Typical_Details\20081104\Erosion_Details.dwg 11/5/2008 1:23:31 PM CST

TransCanada
In business to deliver
KEYSTONE XL PROJECT
PREPARED BY:
TROW ENGINEERING CONSULTANTS, INC.
7505 NW Tiffany Springs Pkwy., Suite 400
Northpointe Circle I
Kansas City, MO 64153
Phone: 1-816-801-7063
Fax: 1-816-801-7048
Trow

ORIGINATOR: JOE A. NELSON (NAME) 9/08/08 (DATE)

CHECKED BY: | APPROVED BY:

DETAIL 1

FIA # | CHAINAGE: | DISCIPLINE #

TITLE: TYPICAL SILT FENCE BARRIER

SCALE: N.T.S. | DWG No: XL-00-ML-7000-501 | REV: 1

LAST PLOT DATE: Wed, 05 Nov 2008 - 1:40pm

CADD DRAWING: DO NOT MAKE MANUAL REVISIONS PLOTTED SIZE: ANSI A (8.5x11)

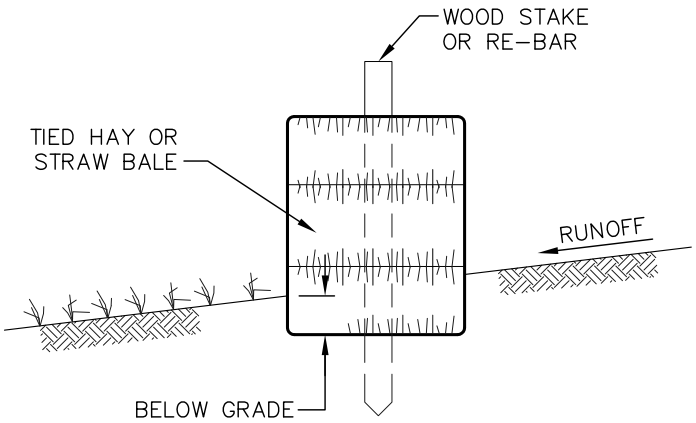

SECTION

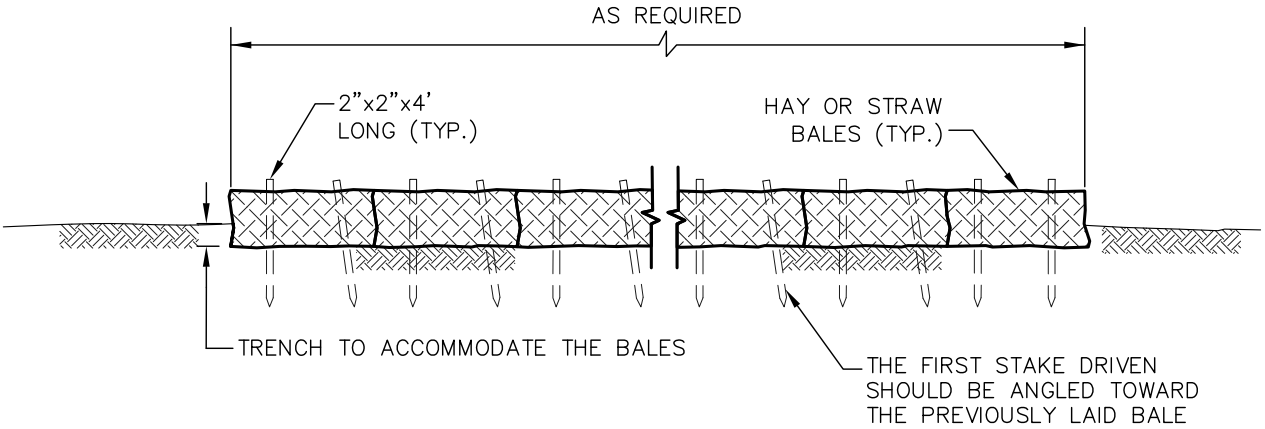

SECTION

NOTES:

1. TO ELIMINATE POSSIBLE END FLOW, BOTH ENDS OF THE STRAW BALE BARRIER SHOULD BE TURNED AND EXTENDED UPSLOPE.
2. EACH BALE SHOULD BE SECURED BY AT LEAST 2 STAKES. THE FIRST STAKE IN EACH BALE SHALL BE DRIVEN TOWARD THE PREVIOUSLY LAID BALE TO FORCE THE BALES TOGETHER. ANY GAPS CAN BE FILLED IN BY WEDGING LOOSE STRAW BETWEEN THE BALES. STAKES SHOULD BE DRIVEN. REBAR OR STANDARD "T" OR "U" STEEL POSTS CAN BE USED AS STAKES, BUT IT SHOULD BE NOTED THAT THEY MAY POSE A HAZARD TO EQUIPMENT IF THE BALES DISINTEGRATE.
3. COMPACT THE EXCAVATED SOIL AGAINST THE UPHILL SIDE OF THE BARRIER TO PREVENT PIPING.
4. STRAW OR HAY BALE BARRIERS REQUIRE CONTINUAL MAINTENANCE TO REMOVE COLLECTED SEDIMENT AND REPLACE DAMAGED BALES. PAY CLOSE ATTENTION TO THE REPAIR OF DAMAGED BALES, END RUNS AND UNDERCUTTING BENEATH BALES.
5. TO ELIMINATE POSSIBLE END FLOW, BOTH ENDS OF STRAW OR HAY BALE RUNS SHOULD BE TURNED AND EXTENDED UPSLOPE.
6. INSTALLATION TO BE MODIFIED BY THE PROJECT AS NECESSARY TO SUIT ACTUAL SITE CONDITIONS.

REVISIONS | 1 | 11.04.08 Updated drawing notes

G:\2000Drafting and GIS\CADFiles\Drawings\Typical_Details\20081104\Erosion_Details.dwg 11/5/2008 1:23:31 PM CST

TransCanada
In business to deliver
KEYSTONE XL PROJECT

PREPARED BY:
TROW ENGINEERING CONSULTANTS, INC.
7505 NW Tiffany Springs Pkwy., Suite 400
Northpointe Circle I
Kansas City, MO 64153
Phone: 1-816-801-7063
Fax: 1-816-801-7048
Trow

ORIGINATOR: JOE A. NELSON (NAME) 9/08/08 (DATE)

CHECKED BY: | APPROVED BY:

DETAIL 2

FIA # | CHAINAGE: | DISCIPLINE #

TITLE: TYPICAL STRAW OR HAY BALE BARRIER

SCALE: N.T.S. | DWG No: XL-00-ML-7000-502 | REV: 1

LAST PLOT DATE: Wed, 05 Nov 2008 - 1:41pm

CADD DRAWING: DO NOT MAKE MANUAL REVISIONS PLOTTED SIZE: ANSI A (8.5x11)

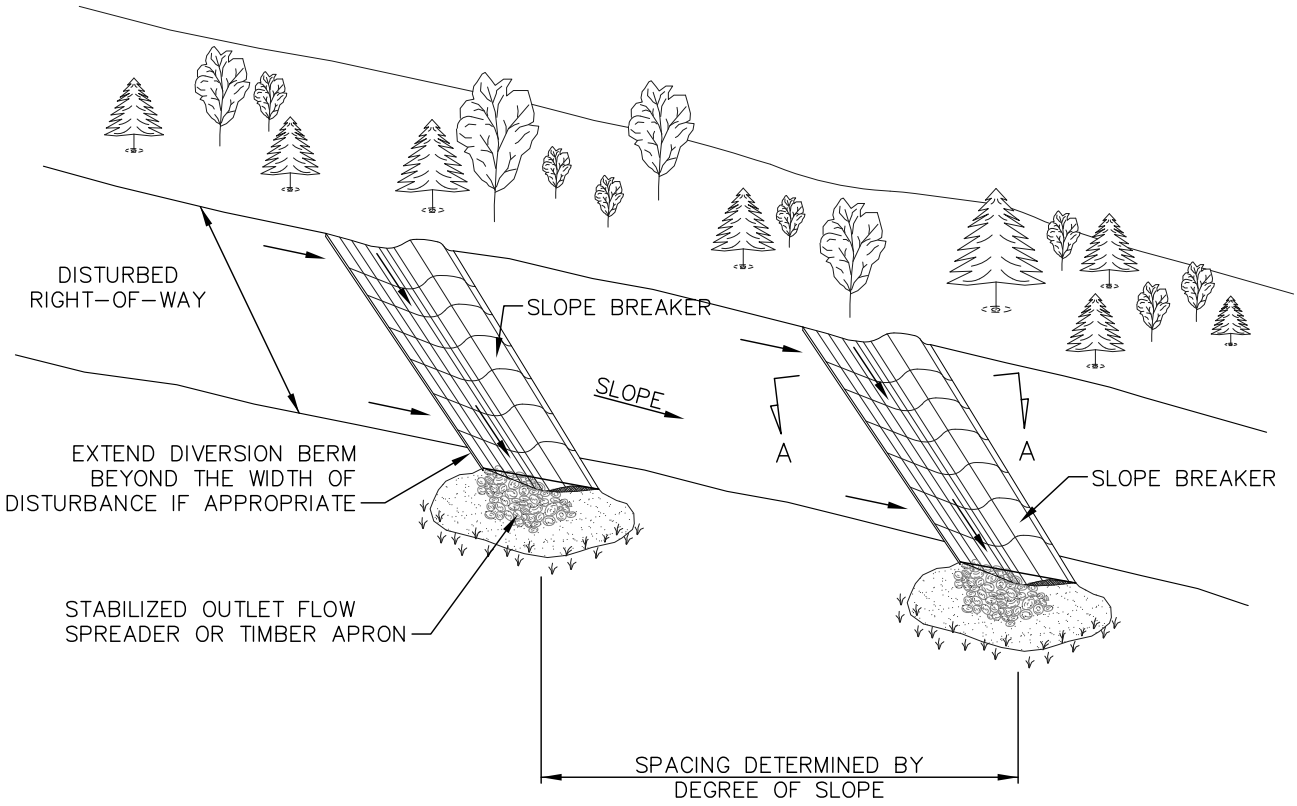

PLAN

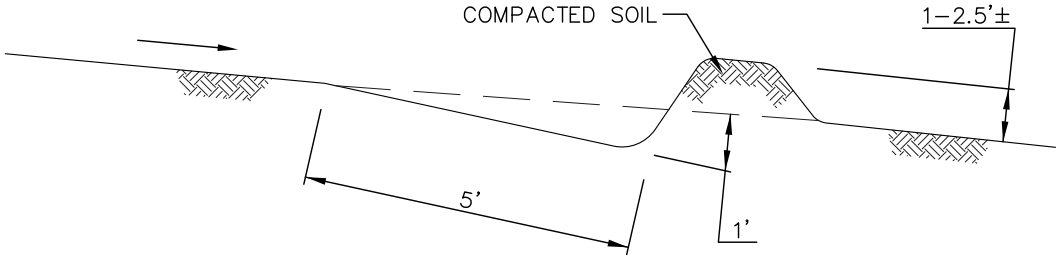

NOTES:

1. PERMANENT SLOPE BREAKERS TO PROVIDE POSITIVE DRAINAGE TO A STABILIZED OUTLET.
2. INSTALLATION SPECIFICATIONS TO BE MODIFIED BY THE PROJECT AS NECESSARY TO SUIT ACTUAL SITE CONDITIONS.
3. THE CONTRACTOR SHALL INSTALL TEMPORARY AND PERMANENT SLOPE BREAKERS ON SLOPES GREATER THAN APPROXIMATELY 5% ON ALL DISTURVED LANDS AT THE FOLLOWING RECOMMENDED SPACING:

SLOPE (%)	SPACING (FEET)
5-15	300
>15-30	200
>30	100

REVISIONS | 1 | 11.04.08 Modified drawing notes

G:\2000Drafting and GIS\CADFiles\Drawings\Typical_Details\20081104\Erosion_Details.dwg 11/5/2008 1:23:31 PM CST

TransCanada
In business to deliver
KEYSTONE XL PROJECT

PREPARED BY:
TROW ENGINEERING CONSULTANTS, INC.
7505 NW Tiffany Springs Pkwy., Suite 400
Northpointe Circle I
Kansas City, MO 64153
Phone: 1-816-801-7063
Fax: 1-816-801-7048
Trow

ORIGINATOR: JOE A. NELSON (NAME) 9/08/08 (DATE)

CHECKED BY: | APPROVED BY:

DETAIL 3

FIA # | CHAINAGE: | DISCIPLINE #

TITLE: TEMPORARY/PERMANENT SLOPE BREAKER DETAIL (WATER BARS)

SCALE: N.T.S. | DWG No: XL-00-ML-7000-553 | REV: 1

LAST PLOT DATE: Wed, 05 Nov 2008 - 2:47pm

CADD DRAWING: DO NOT MAKE MANUAL REVISIONS PLOTTED SIZE: ANSI A (8.5x11)

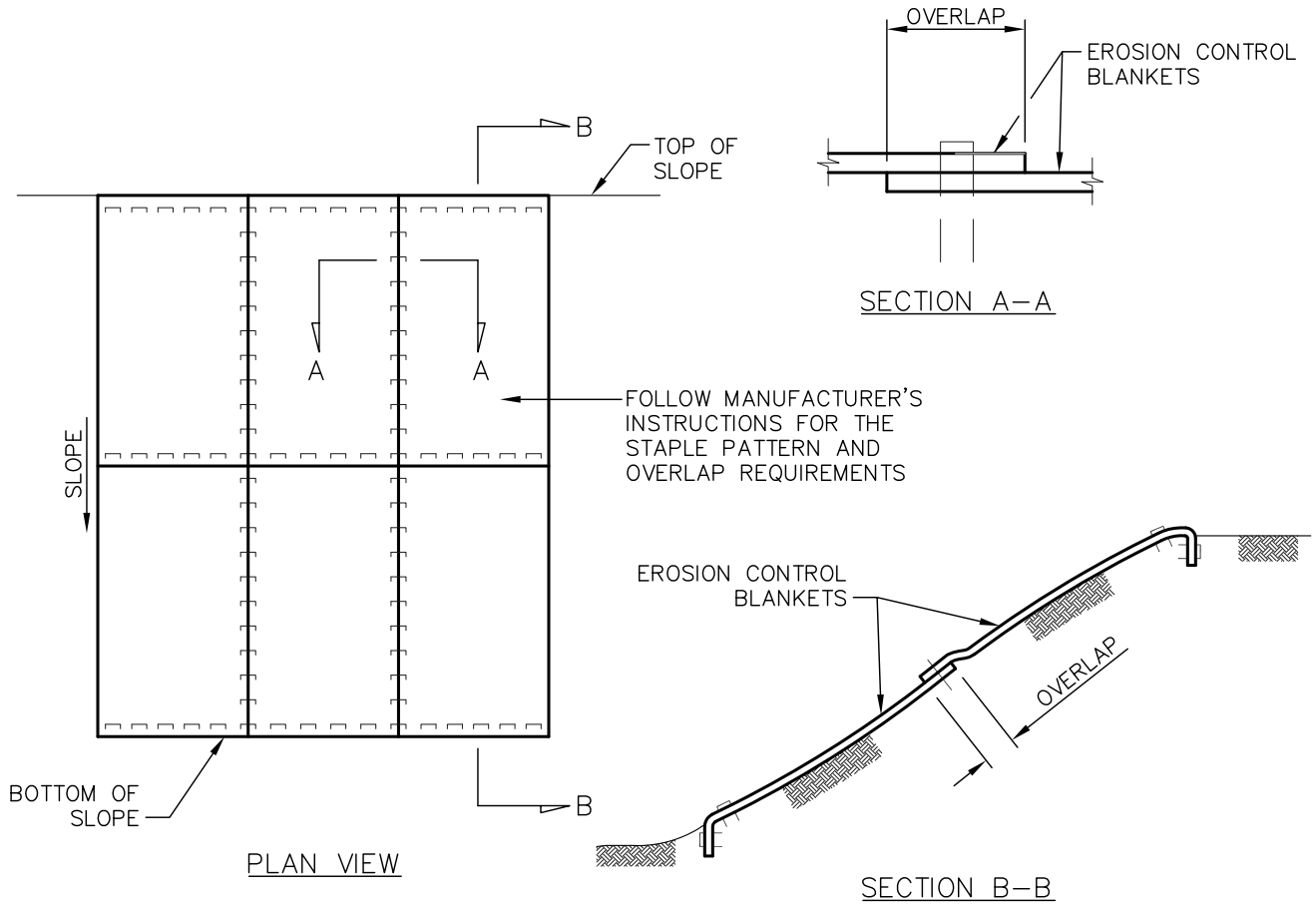

NOTES:

1. INSTALL MATTING IN ACCORDANCE WITH MANUFACTURER'S INSTRUCTIONS.
2. PREPARE SOIL BEFORE INSTALLING MATTING, INCLUDING GRADING, REMOVAL OF LARGE ROCKS AND DEBRIS, AND THE APPLICATION OF SEED AND FERTILIZER IF NOT USING PRE–SEEDED MATTING.
3. EROSION CONTROL MATTING SHALL EXTEND COMPLETELY ACROSS DISTURBED AREAS TO PROTECT ERODIBLE SURFACES.
4. BEGIN AT THE TOP OF THE SLOPE BY ANCHORING THE MATTING IN A TRENCH. BACKFILL AND COMPACT THE TRENCH AFTER STAPLING.
5. ROLL THE MATTING DOWN THE SLOPE IN THE DIRECTION OF THE WATER FLOW.
6. AS AN ALTERNATIVE TO STAPLES, WOODEN STAKES CAN BE USED.
7. ENSURE COMPLETE CONTACT BETWEEN THE MATTING AND THE SLOPE FACE. ADDITIONAL STAPLES CAN BE USE TO ELIMINATE GAPS.
8. INSTALLATION SPECIFICATIONS TO BE MODIFIED BY THE PROJECT AS NECESSARY TO SUIT ACTUAL SITE CONDITIONS.

REVISIONS | 1 | 11.04.08 Modified drawing notes

G:\2000Drafting and GIS\CADFiles\Drawings\Typical_Details\20081104\Erosion_Details.dwg 11/5/2008 1:23:31 PM CST

TransCanada
In business to deliver
KEYSTONE XL PROJECT
PREPARED BY:
TROW ENGINEERING CONSULTANTS, INC.
7505 NW Tiffany Springs Pkwy., Suite 400
Northpointe Circle I
Kansas City, MO 64153
Phone: 1–816–801–7063
Fax: 1–816–801–7048
Trow

ORIGINATOR: JOE A. NELSON (NAME) 9/08/08 (DATE)

CHECKED BY: | APPROVED BY:

DETAIL 4

FIA # | CHAINAGE: | DISCIPLINE #

TITLE: EROSION CONTROL MATTING INSTALLATION

SCALE: N.T.S. | DWG No: XL–00–ML–7000–503 | REV: 1

LAST PLOT DATE: Wed, 05 Nov 2008 – 2:45pm

CADD DRAWING: DO NOT MAKE MANUAL REVISIONS PLOTTED SIZE: ANSI A (8.5x11)

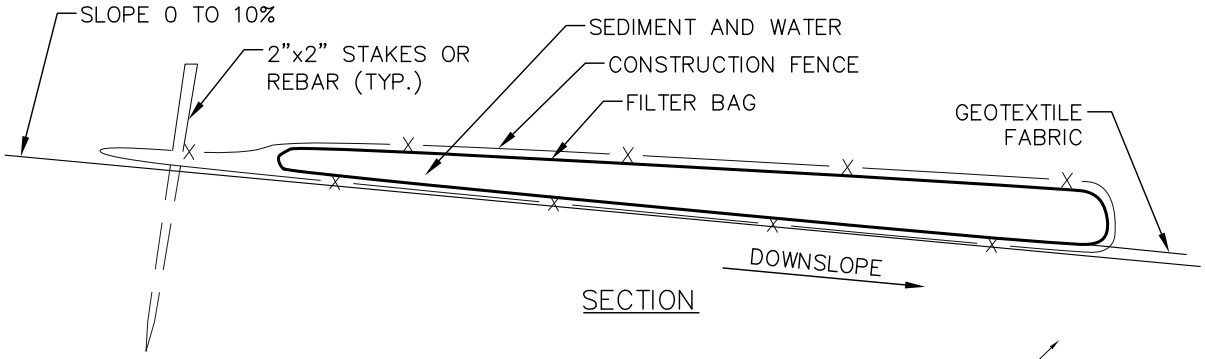

SECTION

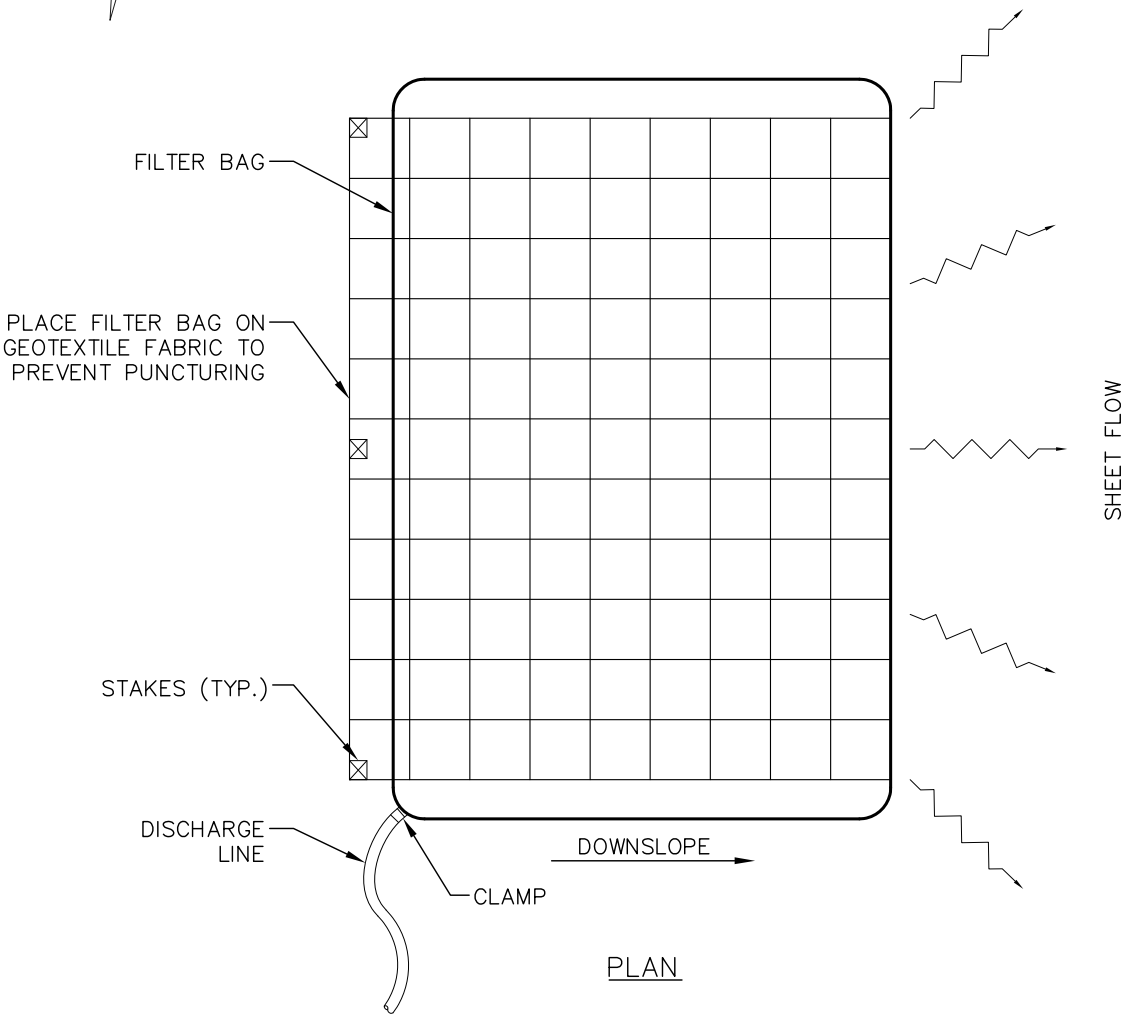

PLAN

NOTES:

1. MANUFACTURED FILTER BAGS ARE A SUITABLE ALTERNATIVE TO STRAW BALE STRUCTURES FOR TRENCH DEWATERING. FILTER BAGS SHALL BE INSTALLED AS SPECIFIED BY THE MANUFACTURER.
2. INSTALLATION SPECIFICATIONS TO BE MODIFIED AS NECESSARY TO SUIT ACTUAL SITE CONDITIONS.

REVISIONS | 1 | 11.04.08 Modified drawing notes

G:\2000Drafting and GIS\CADFiles\Drawings\Typical_Details\20081104\Erosion_Details.dwg 11/5/2008 1:23:31 PM CST

TransCanada
In business to deliver
KEYSTONE XL PROJECT
PREPARED BY:
TROW ENGINEERING CONSULTANTS, INC.
7505 NW Tiffany Springs Pkwy., Suite 400
Northpointe Circle I
Kansas City, MO 64153
Phone: 1-816-801-7063
Fax: 1-816-801-7048
Trow

ORIGINATOR: JOE A. NELSON (NAME) 9/08/08 (DATE)

CHECKED BY: | APPROVED BY:

DETAIL 5

FIA # | CHAINAGE: | DISCIPLINE #

TITLE: TYPICAL DEWATERING FILTER BAG

SCALE: N.T.S. | DWG No: XL-00-ML-7000-504 | REV: 1

LAST PLOT DATE: Wed, 05 Nov 2008 - 3:03pm

CADD DRAWING: DO NOT MAKE MANUAL REVISIONS PLOTTED SIZE: ANSI A (8.5x11)

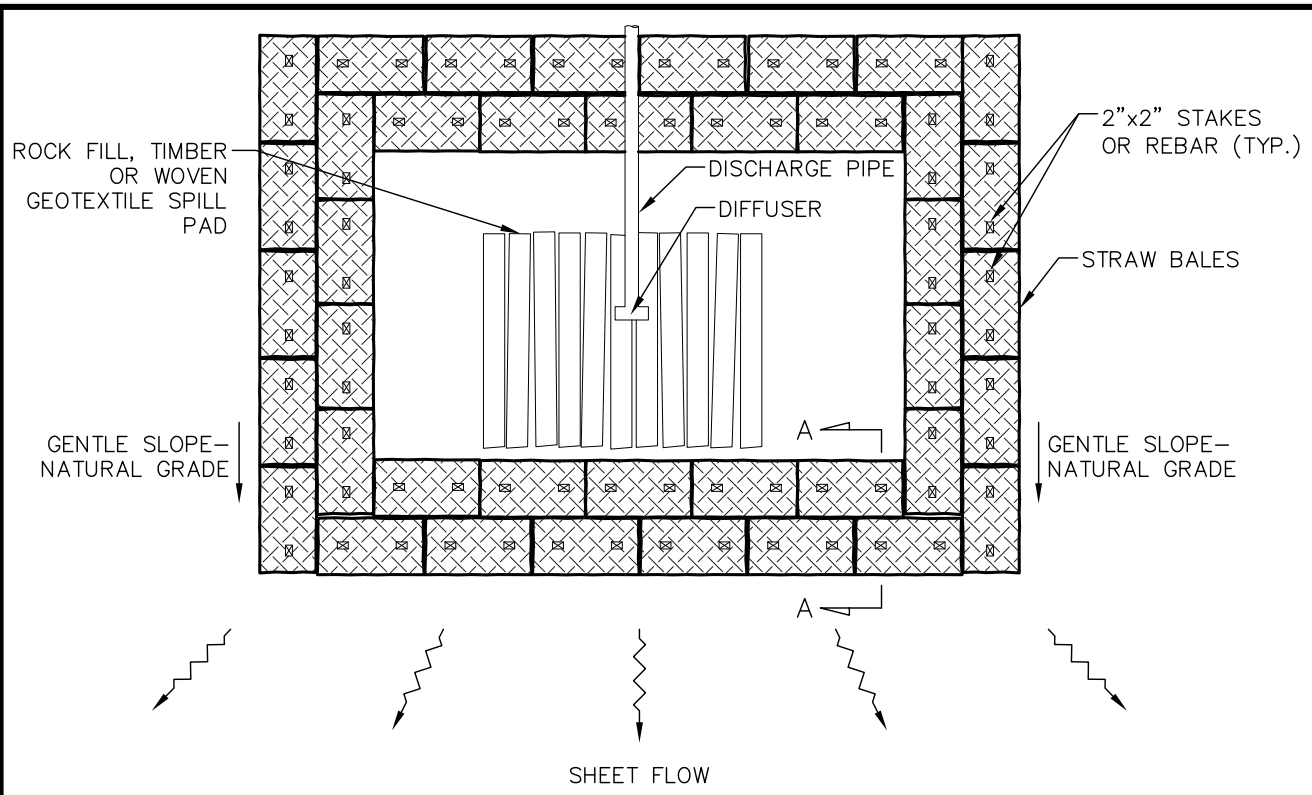

PLAN

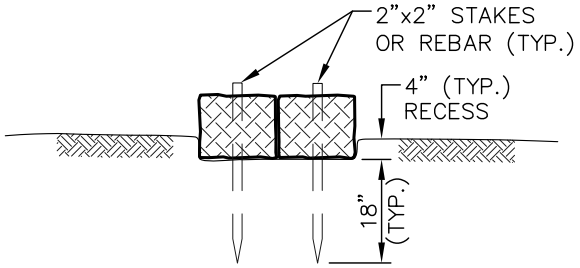

SECTION A–A

NOTES:

1. INSTALL A STRAW BALE DEWATERING STRUCTURE WHEREVER IT IS NECESSARY AND AS DIRECTED BY THE ENVIRONMENTAL INSPECTOR TO PREVENT THE FLOW OF HEAVILY SILT LADEN WATER INTO WATERBODIES OR WETLANDS.
2. DISCHARGE SITE SHOULD BE WELL VEGETATED AND LOCATED AT LEAST 50 FEET FROM ANY WATERBODY. THE TOPOGRAPHY OF THE SITE SHOULD BE SUCH THAT WATER WILL FLOW INTO THE DEWATERING STRUCTURE AND AWAY FROM ANY WORK AREAS. THE AREA DOWNSLOPE FROM THE DEWATERING SITE MUST BE REASONABLY FLAT OR STABILIZED BY VEGETATION OR OTHER MEANS TO ALLOW THE FILTERED WATER TO CONTINUE AS SHEET FLOW.
3. DIRECT THE PUMPED WATER ONTO A STABLE SPILL PAD CONSTRUCTED OF ROCKFILL, WEIGHTED TIMBERS, OR A WOVEN GEOTEXTILE STAKED TO THE GROUND SURFACE, SUCH AS MIRAFI 600X, TERRAFIX 400W, OR A COMPANY APPROVED EQUIVALENT. BEYOND THE SPILL PAD FORCE THE DISCHARGE WATER INTO SHEET FLOW USING STRAW BALES AND THE NATURAL TOPOGRAPHY.
4. DISCHARGE RATES SHOULD BE SUCH THAT THE CAPACITY OF THE STRUCTURE WILL NOT BE EXCEEDED.
5. DISCHARGE WATER SHALL BE FORCED INTO THE SHEET FLOW IMMEDIATELY BEYOND THE SPILL PAD USING A COMBINATION OF STRAW BALES AND THE NATURAL TOPOGRAPHY. RECESS STRAW BALES. DRIVE TWO (2) STAKES OR REBAR INTO EACH BALE TO ANCHOR THEM IN PLACE.
6. INSTALLATION SPECIFICATIONS TO BE MODIFIED AS NECESSARY TO SUIT ACTUAL SITE CONDITIONS.

REVISIONS | 1 | 11.04.08 Modified drawing notes

G:\2000Drafting and GIS\CADFiles\Drawings\Typical_Details\20081104\Erosion_Details.dwg 11/5/2008 1:23:31 PM CST

TransCanada
In business to deliver
KEYSTONE XL PROJECT
PREPARED BY:
TROW ENGINEERING CONSULTANTS, INC.
7505 NW Tiffany Springs Pkwy., Suite 400
Northpointe Circle I
Kansas City, MO 64153
Phone: 1–816–801–7063
Fax: 1–816–801–7048
Trow

ORIGINATOR: JOE A. NELSON (NAME) 9/08/08 (DATE)

CHECKED BY: | APPROVED BY:

DETAIL 6

FIA # | CHAINAGE: | DISCIPLINE #

TITLE: TYPICAL STRAW BALE DEWATERING STRUCTURE

SCALE: N.T.S. | DWG No: XL–00–ML–7000–505 | REV: 1

LAST PLOT DATE: Wed, 05 Nov 2008 – 3:04pm

CADD DRAWING: DO NOT MAKE MANUAL REVISIONS PLOTTED SIZE: ANSI A (8.5x11)

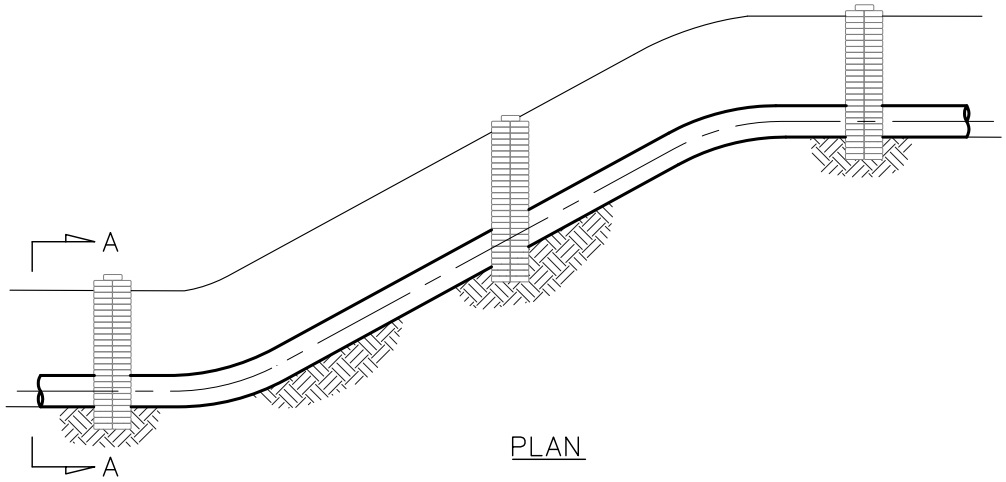

PLAN

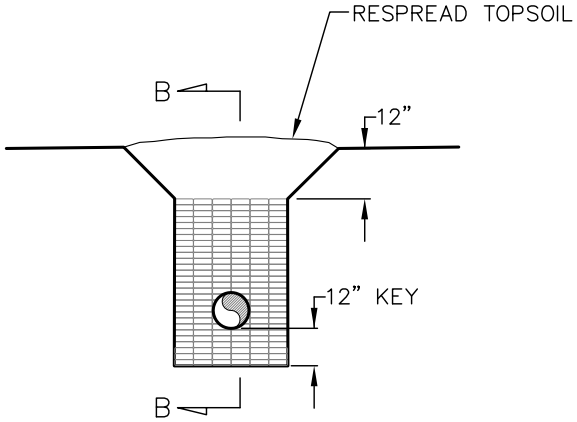

SECTION A–A

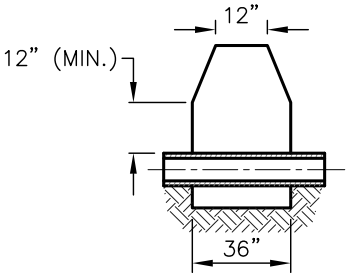

SECTION B–B

NOTES:

1. TRENCH BREAKERS TO BE INSTALLED AS SHOWN ON THE CONSTRUCTION DRAWINGS, WHERE DESCRIBED IN THE PLAN, AND AS DIRECTED.
2. OPEN WEAVE HEMP OR JUTE SACKS SHALL BE FILLED WITH AN AVERAGE 55 LBS. MIXTURE OF:
   1) ONE (1) PART CEMENT AND SIX (6) PARTS SAND OR SUBSOIL, OR
   2) ONE (1) PART CEMENT, THREE (3) PARTS FLYASH, AND FIVE (5) PARTS SAND OR SUBSOIL
   3) SAND WITH JUST SUFFICIENT WATER TO PERMIT MIXTURE TO EXUDE AND BOND SACKS TOGETHER. TOPSOIL IS NOT TO BE USED IN SACKS.
3. KEY EACH TRENCH BREAKER A MINIMUM OF ONE (1) FT. INTO BOTTOMS AND SIDES OF TRENCH.
4. FOAM TRENCH BREAKERS MAY BE USED IN LIEU OF SAND SACK TRENCH BREAKERS.
5. INSTALLATION SPECIFICATIONS TO BE MODIFIED AS NECESSARY TO SUIT ACTUAL SITE CONDITIONS.
6. TRENCH BREAKERS SHALL BE INSTALLED SUCH THAT THE TOP OF EACH DOWNSLOPE BREAKER IS ABOVE THE BOTTOM OF THE NEXT UPSLOPE BREAKER.

REVISIONS | 1 | 11.04.08 Updated drawing notes

G:\2000Drafting and GIS\CADFiles\Drawings\Typical_Details\20081104\Erosion_Details.dwg 11/5/2008 1:23:31 PM CST

TransCanada
In business to deliver
KEYSTONE XL PROJECT
PREPARED BY:
TROW ENGINEERING CONSULTANTS, INC.
7505 NW Tiffany Springs Pkwy., Suite 400
Northpointe Circle I
Kansas City, MO 64153
Phone: 1–816–801–7063
Fax: 1–816–801–7048
Trow

ORIGINATOR: JOE A. NELSON (NAME) 9/08/08 (DATE)

CHECKED BY: | APPROVED BY:

DETAIL 7

FIA #	CHAINAGE:	DISCIPLINE #

TITLE: TYPICAL PERMANENT TRENCH BREAKER

SCALE	DWG No	REV
N.T.S.	XL–00–ML–7000–506	1

LAST PLOT DATE: Thu, 06 Nov 2008 – 10:51am

CADD DRAWING: DO NOT MAKE MANUAL REVISIONS PLOTTED SIZE: ANSI A (8.5x11)

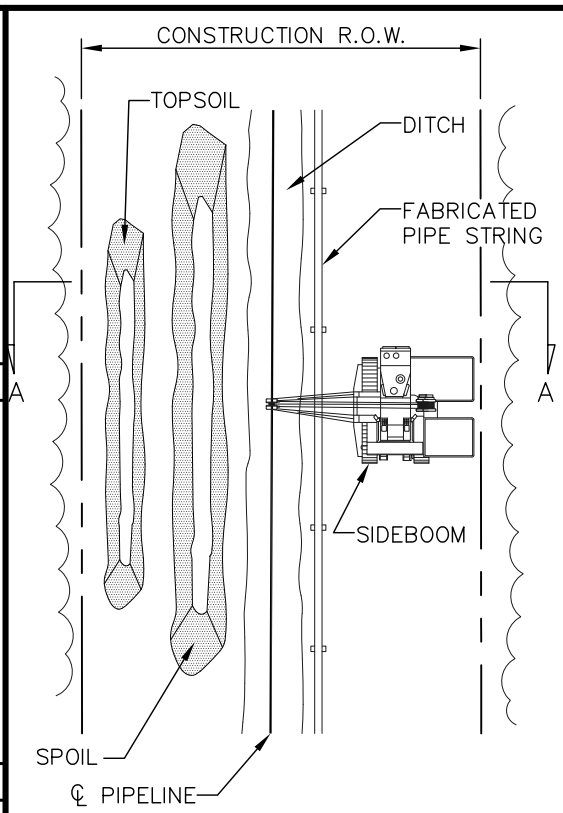

PLAN VIEW

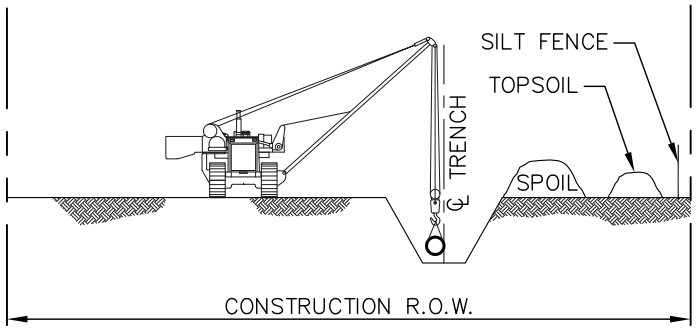

SECTION "A–A"

CONSTRUCTION PROCEDURES:

1. IF A WETLAND IS BEING CULTIVATED AND BEING FARMED, NO WETLAND CONSTRUCTION PROCEDURES ARE REQUIRED.
2. FLAG WETLAND BOUNDARIES PRIOR TO CLEARING.
3. NO REFUELING OF MOBILE EQUIPMENT IS ALLOWED WITHIN 100 FEET OF WETLAND. PLACE "NO FUELING" SIGN POSTS APPROXIMATELY 100 FEET BACK FROM WETLAND BOUNDARY. REFUEL STATIONARY EQUIPMENT AS PER THE PROJECT'S SPILL PREVENTION PROCEDURES.
4. INSTALL TEMPORARY SLOPE BREAKER UPSLOPE WITHIN 100 FEET OF WETLAND BOUNDARY IF DIRECTED BY THE PROJECT.
5. CONSTRUCT WHEN DRY, IF POSSIBLE. IF SITE BECOMES WET AT TIME OF TRENCHING, AVOID SOIL COMPACTION BY UTILIZING TIMBER RIP–RAP OR PREFABRICATED EQUIPMENT MATS.
6. AVOID ADJACENT WETLANDS. INSTALL SEDIMENT BARRIERS (STRAW BALES AND/OR SILT FENCE) AT DOWN SLOPE EDGE OF RIGHT–OF–WAY ALONG WETLAND EDGE IF EVIDENT, OTHERWISE INSTALL BARRIER ON BOTH EDGES.
7. RESTRICT ROOT GRUBBING TO ONLY THAT AREA OVER THE DITCHLINE AND REMOVE STUMPS FROM WETLAND FOR DISPOSAL.
8. CONDUCT TRENCH LINE TOPSOIL STRIPPING (IF TOPSOIL IS NOT SATURATED). SALVAGE TOPSOIL TO ACTUAL DEPTH OR A MAXIMUM DEPTH OF 12 INCHES.
9. TRENCH THROUGH WETLANDS.
10. PIPE SECTION TO BE FABRICATED WITHIN THE WETLAND AND ADJACENT TO ALIGNMENT, OR IN STAGING AREA OUTSIDE THE WETLAND AND WALKED IN.
11. LOWER–IN PIPE. PRIOR TO BACKFILLING TRENCH, IF REQUIRED, TRENCH PLUGS SHALL BE INSTALLED AS REQUIRED. BACKFILL TRENCH.
12. RESTORE GRADE TO NEAR PRE–CONSTRUCTION TOPOGRAPHY, REPLACE TOPSOIL AND INSTALL PERMANENT EROSION CONTROL.
13. IF UTILIZED, REMOVE TIMBER MATS OR PRE–FABRICATED MATS FROM WETLANDS UPON COMPLETION.

REVISIONS | 1 | REVISED NOTES 3 & 4

G:\2000Drafting and GIS\CADFiles\Drawings\Typical_Details\20081104\Crossing_Details.dwg 11/5/2008 3:17:58 PM CST

TransCanada
In business to deliver
KEYSTONE XL PROJECT
PREPARED BY:
TROW ENGINEERING CONSULTANTS, INC.
7505 NW Tiffany Springs Pkwy., Suite 400
Northpointe Circle I
Kansas City, MO 64153
Phone: 1–816–801–7063
Fax: 1–816–801–7048
Trow

ORIGINATOR: JOE A. NELSON (NAME) 9/08/08 (DATE)

CHECKED BY: | APPROVED BY:

DETAIL 8

FIA #	CHAINAGE:	DISCIPLINE #

TITLE: "DRY" WETLAND CROSSING METHOD

SCALE	DWG No	REV
N.T.S.	XL–00–ML–7000–507	1

LAST PLOT DATE: Wed, 05 Nov 2008 – 4:40pm

CADD DRAWING: DO NOT MAKE MANUAL REVISIONS PLOTTED SIZE: ANSI A (8.5x11)

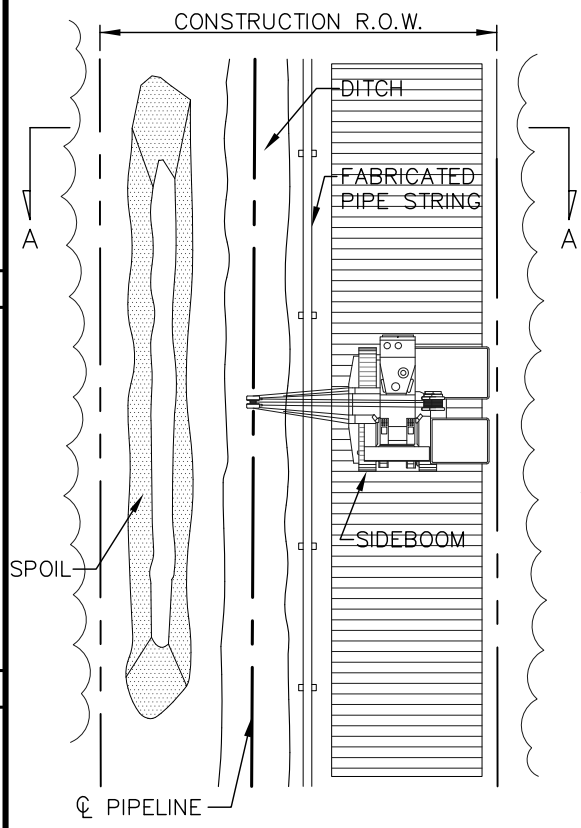

PLAN VIEW

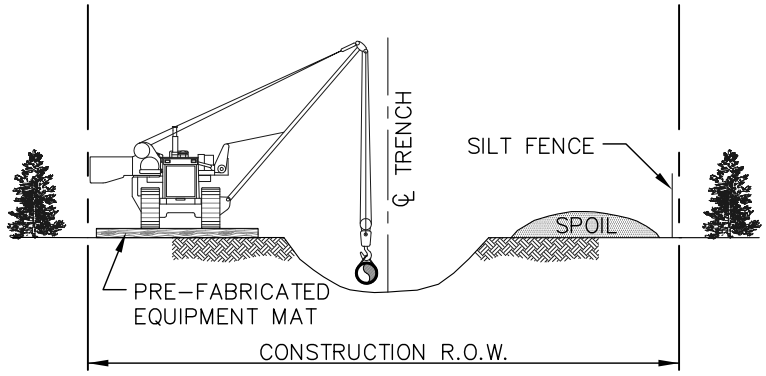

SECTION A–A

CONSTRUCTION PROCEDURES:

1. FLAG WETLAND BOUNDARIES PRIOR TO CLEARING.
2. NO REFUELING OF MOBILE EQUIPMENT IS ALLOWED WITHIN 100 FEET OF WETLAND. PLACE "NO FUELING" SIGN POSTS 100 FEET BACK FROM WETLAND BOUNDARY. REFUEL STATIONARY EQUIPMENT AS PER THE PROJECT'S SPILL PREVENTION PROCEDURES.
3. INSTALL TEMPORARY SLOPE BREAKER UPSLOPE WITHIN 100 FEET OF WETLAND BOUNDARY IF DIRECTED BY THE PROJECT.
4. INSTALL TIMBER MATS/RIPRAP THROUGH ENTIRE WETLAND AREA. EQUIPMENT NECESSARY FOR RIGHT–OF–WAY CLEARING MAY MAKE ONE (1) PASS THROUGH THE WETLAND BEFORE MATS ARE INSTALLED.
5. AVOID ADJACENT WETLANDS. INSTALL SEDIMENT BARRIERS (STRAW BALES AND/OR SILT FENCE) AT DOWNSLOPE EDGE OF RIGHT–OF–WAY AND ALONG WETLAND EDGE AS REQUIRED.
6. RESTRICT ROOT GRUBBING TO ONLY THAT AREA OVER THE DITCHLINE AND DITCH SPOIL AREAS AND REMOVED FROM WETLAND FOR DISPOSAL.
7. TOPSOIL STRIPPING SHALL NOT BE REQUIRED IN SATURATED SOIL CONDITIONS.
8. LEAVE HARD PLUGS AT EDGE OF WETLAND UNTIL JUST PRIOR TO TRENCHING.
9. PIPE SECTION MAY BE FABRICATED WITHIN THE WETLAND AND ADJACENT TO ALIGNMENT, OR IN STAGING AREA OUTSIDE THE WETLAND AND WALKED IN.
10. TRENCH THROUGH WETLANDS.
11. LOWER–IN PIPE, INSTALL TRENCH PLUGS AT WETLAND EDGES AS REQUIRED AND BACKFILL IMMEDIATELY.
12. REMOVE TIMBER MATS OR PRE–FABRICATED MATS FROM WETLAND UPON COMPLETION.
13. RESTORE GRADE TO NEAR PRE–CONSTRUCTION TOPOGRAPHY, REPLACE TOPSOIL AND INSTALL PERMANENT EROSION CONTROL.

REVISIONS | 1 | REVISED NOTES 2 & 3

G:\2000Drafting and GIS\CADFiles\Drawings\Typical_Details\20081104\Crossing_Details.dwg 11/5/2008 3:17:58 PM CST

TransCanada
In business to deliver
KEYSTONE XL PROJECT
PREPARED BY:
TROW ENGINEERING CONSULTANTS, INC.
7505 NW Tiffany Springs Pkwy., Suite 400
Northpointe Circle I
Kansas City, MO 64153
Phone: 1–816–801–7063
Fax: 1–816–801–7048
Trow

ORIGINATOR: JOE A. NELSON (NAME) 9/08/08 (DATE)

CHECKED BY: | APPROVED BY:

DETAIL 9

FIA #	CHAINAGE:	DISCIPLINE #

TITLE: STANDARD WETLAND CROSSING METHOD

SCALE	DWG No	REV
N.T.S.	XL–00–ML–7000–508	1

LAST PLOT DATE: Wed, 05 Nov 2008 – 4:41pm

CADD DRAWING: DO NOT MAKE MANUAL REVISIONS PLOTTED SIZE: ANSI A (8.5x11)

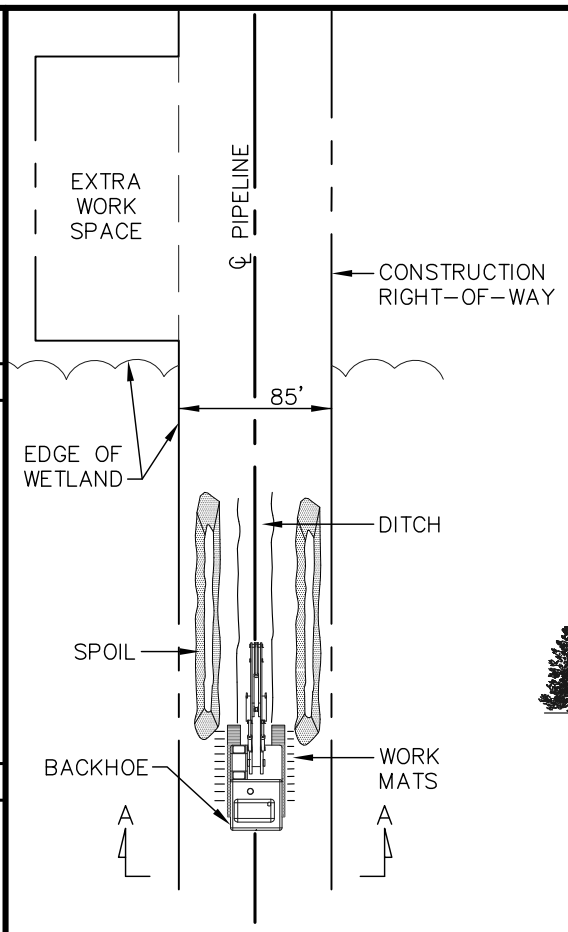

PLAN VIEW

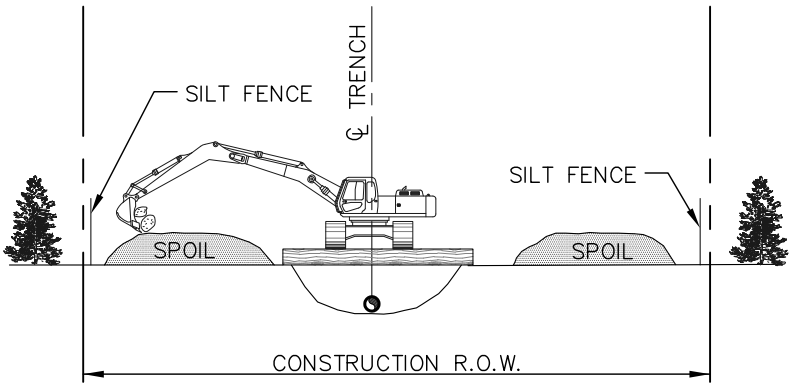

SECTION A–A

CONSTRUCTION PROCEDURES:

1. FLAG WETLAND BOUNDARIES PRIOR TO CLEARING.
2. NO REFUELING OF MOBILE EQUIPMENT IS ALLOWED WITHIN APPROXIMATELY 100 FEET OF WETLAND. PLACE "NO FUELING" SIGN POSTS 100 FEET BACK FROM WETLAND BOUNDARY. REFUEL STATIONARY EQUIPMENT AS PER THE PROJECT'S SPILL PREVENTION PROCEDURES.
3. INSTALL TEMPORARY SLOPE BREAKER UPSLOPE WITHIN 100 FEET OF WETLAND BOUNDARY AS DIRECTED BY THE PROJECT.
4. RESTRICT ROOM GRUBBING TO ONLY THE AREA OVER THE DITCHLINE.
5. TOPSOIL STRIPPING SHALL NOT BE REQUIRED IN SATURATED SOIL CONDITIONS.
6. UTILIZE AMPHIBIOUS EXCAVATORS (PONTOON MOUNTED BACKHOES) OR TRACKED BACKHOES SUPPORTED BY FABRICATED TIMBER MATS OR FLOATS TO EXCAVATE TRENCH. IF FABRICATED TIMBER MATS ARE USED FOR STABILIZATION, THE BACKHOE SHALL GRADUALLY MOVE ACROSS THE WETLAND BY MOVING THE MAT FROM IMMEDIATELY BEHIND TO IMMEDIATELY IN FRONT OF THE BACKHOE'S PATH.
7. AVOID ADJACENT WETLANDS. INSTALL SEDIMENT BARRIERS (STRAW BALES AND/OR SILT FENCE) AT EDGE OF RIGHT–OF–WAY AND ALONG WETLAND EDGE IF PRACTICAL.
8. FABRICATE PIPE IN STAGING AREA OUTSIDE THE WETLAND IN THE EXTRA WORK SPACE AS INDICATED ON THE CONSTRUCTION DRAWINGS.
9. LEAVE HARD PLUGS AT THE EDGE OF THE WETLAND UNTIL JUST PRIOR TO PIPE PLACEMENT.
10. FLOAT PIPE IN PLACE, LOWER–IN, INSTALL TRENCH PLUGS AT WETLAND EDGES WHERE REQUIRED AND BACKFILL IMMEDIATELY.
11. REMOVE TIMBER MATS OR PRE–FABRICATED MATS OF NON–NATIVE MATERIAL FROM WETLANDS UPON COMPLETION.
12. RESTORE GRADE TO NEAR PRE–CONSTRUCTION TOPOGRAPHY AND INSTALL PERMANENT EROSION CONTROL.
13. THE CONSTRUCTION RIGHT–OF–WAY FOR THIS TYPE OF CONSTRUCTION SHALL BE 85 FEET.

REVISIONS | 1 | REVISED NOTES 2, 3 & 13

G:\2000Drafting and GIS\CADFiles\Drawings\Typical_Details\20081104\Crossing_Details.dwg 11/5/2008 3:17:58 PM CST

TransCanada
In business to deliver
KEYSTONE XL PROJECT

PREPARED BY:
TROW ENGINEERING CONSULTANTS, INC.
7505 NW Tiffany Springs Pkwy., Suite 400
Northpointe Circle I
Kansas City, MO 64153
Phone: 1–816–801–7063
Fax: 1–816–801–7048
Trow

ORIGINATOR: JOE A. NELSON (NAME) 9/08/08 (DATE)

CHECKED BY: | APPROVED BY:

DETAIL 10

FIA # | CHAINAGE: | DISCIPLINE #

TITLE: PUSH/PULL WETLAND CROSSING METHOD

SCALE: N.T.S. | DWG No: XL–00–ML–7000–509 | REV: 1

LAST PLOT DATE: Wed, 05 Nov 2008 – 4:41pm

CADD DRAWING: DO NOT MAKE MANUAL REVISIONS PLOTTED SIZE: ANSI A (8.5x11)

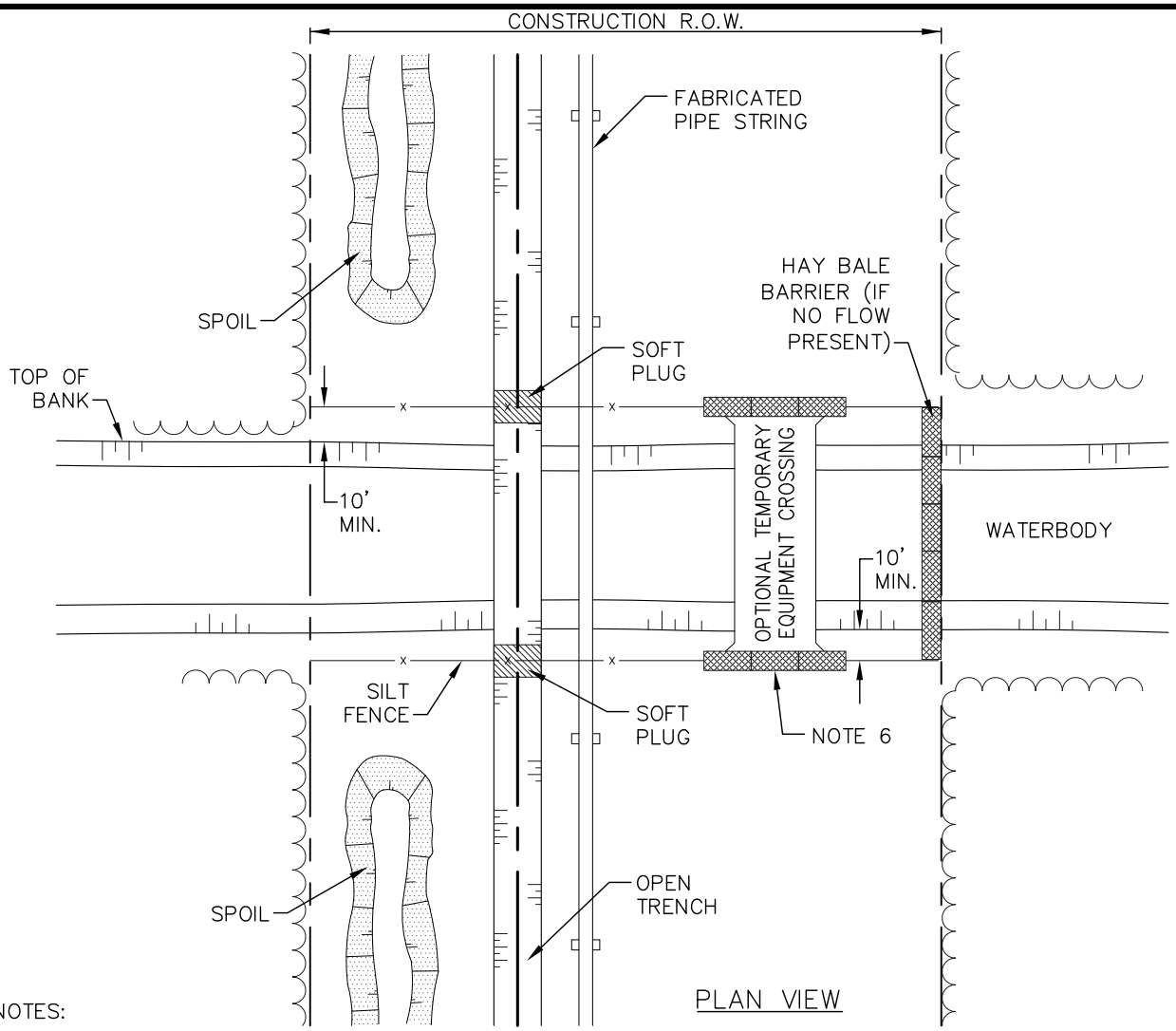

NOTES:

1. FLAG WETLAND BOUNDARIES PRIOR TO CLEARING.
2. NO REFUELING OF MOBILE EQUIPMENT IS ALLOWED WITHIN 100 FEET OF WETLAND. PLACE "NO FUELING" SIGN POSTS 100 FEET BACK FROM WETLAND BOUNDARY. REFUEL STATIONARY EQUIPMENT AS PER THE PROJECT'S SPILL PREVENTION PROCEDURES.
3. INSTALL TEMPORARY SLOPE BREAKER UPSLOPE WITHIN 100 FEET OF WETLAND BOUNDARY IF DIRECTED BY THE PROJECT.
4. INSTALL TIMBER MATS/RIPRAP THROUGH ENTIRE WETLAND AREA. EQUIPMENT NECESSARY FOR RIGHT-OF-WAY CLEARING MAY MAKE ONE (1) PASS THROUGH THE WETLAND BEFORE MATS ARE INSTALLED.
5. AVOID ADJACENT WETLANDS. INSTALL SEDIMENT BARRIERS (STRAW BALES AND/OR SILT FENCE) AT DOWNSLOPE EDGE OF RIGHT-OF-WAY AND ALONG WETLAND EDGE AS REQUIRED.
6. RESTRICT ROOT GRUBBING TO ONLY THAT AREA OVER THE DITCHLINE AND DITCH SPOIL AREAS AND REMOVED FROM WETLAND FOR DISPOSAL.
7. TOPSOIL STRIPPING SHALL NOT BE REQUIRED IN SATURATED SOIL CONDITIONS.
8. LEAVE HARD PLUGS AT EDGE OF WETLAND UNTIL JUST PRIOR TO TRENCHING.
9. PIPE SECTION MAY BE FABRICATED WITHIN THE WETLAND AND ADJACENT TO ALIGNMENT, OR IN STAGING AREA OUTSIDE THE WETLAND AND WALKED IN.
10. TRENCH THROUGH WETLAND.
11. LOWER-IN PIPE, INSTALL TRENCH PLUGS AT WETLAND EDGES AS REQUIRED AND BACKFILL IMMEDIATELY.
12. REMOVE TIMBER MATS OR PRE-FABRICATED MATS FROM WETLAND UPON COMPLETION.
13. RESTORE GRADE TO NEAR PRE-CONSTRUCTION TOPOGRAPHY, REPLACE TOPSOIL AND INSTALL PERMANENT EROSION CONTROL.

REVISIONS 1 Updated drawing notes

G:\2000Drafting and GIS\CADFiles\Drawings\Typical_Details\20081104\Crossing_Details.dwg 11/5/2008 3:17:58 PM CST

TransCanada
In business to deliver
KEYSTONE XL PROJECT
PREPARED BY:
TROW ENGINEERING CONSULTANTS, INC.
7505 NW Tiffany Springs Pkwy., Suite 400
Northpointe Circle I
Kansas City, MO 64153
Phone: 1-816-801-7063
Fax: 1-816-801-7048
Trow

ORIGINATOR: JOE A. NELSON 9/08/08
NAME DATE

CHECKED BY: APPROVED BY:

DETAIL 11

FIA # | CHAINAGE: | DISCIPLINE #

TITLE
TYPICAL OPEN CUT WET CROSSING METHOD
NON-FLOWING WATERBODY

SCALE N.T.S. | DWG No XL-00-ML-7000-510 | REV 1

LAST PLOT DATE: Wed, 05 Nov 2008 - 4:45pm

CADD DRAWING: DO NOT MAKE MANUAL REVISIONS PLOTTED SIZE: ANSI A (8.5x11)

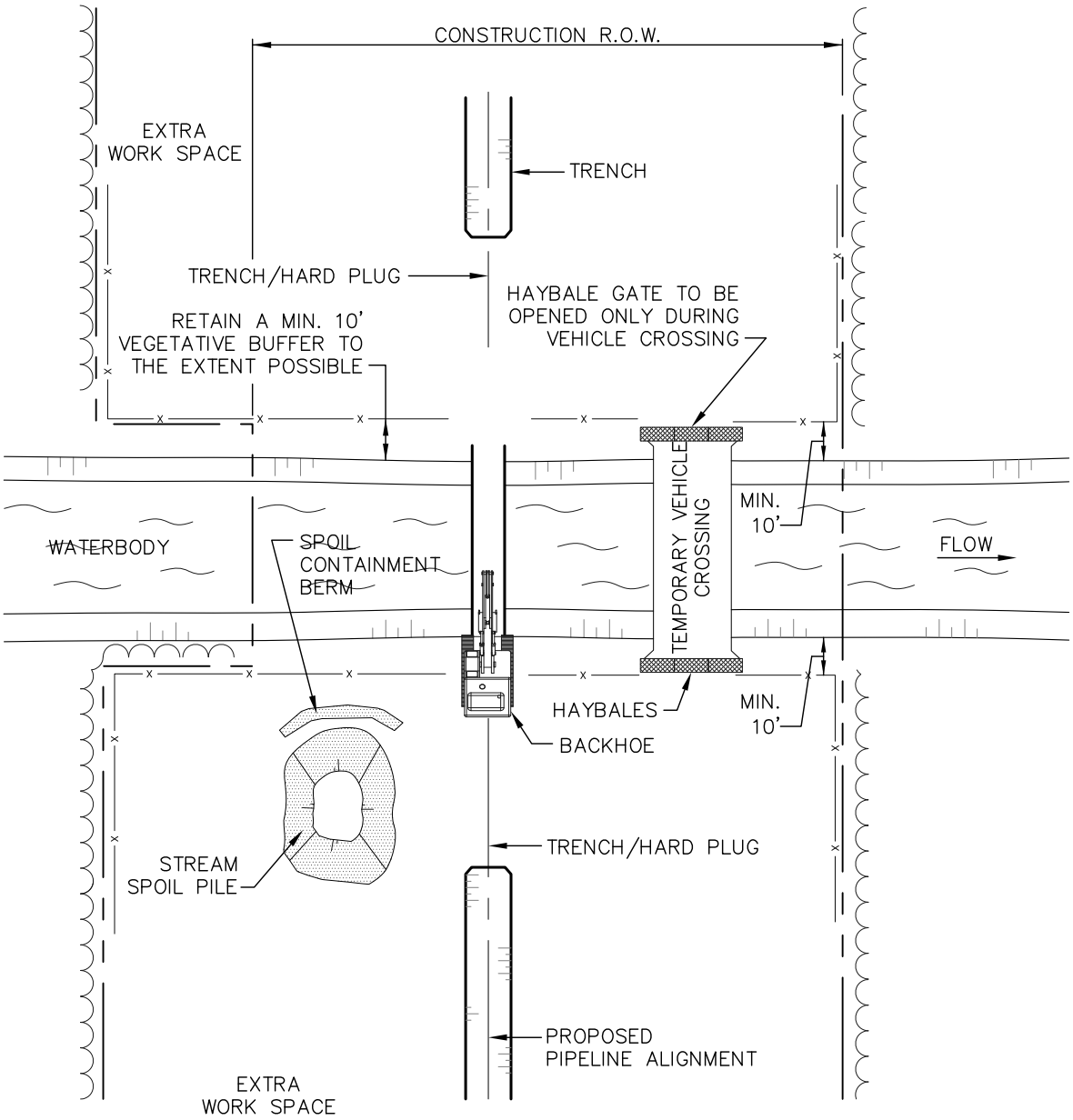

PLAN VIEW

G:\2000Drafting and GIS\CADFiles\Drawings\Typical_Details\20081104\Crossing_Details.dwg 11/4/2008 4:52:08 PM CST

REVISIONS		
1	Updated drawing notes	

TransCanada
In business to deliver

KEYSTONE XL PROJECT

PREPARED BY:
TROW ENGINEERING CONSULTANTS, INC.
7505 NW Tiffany Springs Pkwy., Suite 400
Northpointe Circle I
Kansas City, MO 64153
Phone: 1-816-801-7063
Fax: 1-816-801-7048
Trow

LAST PLOT DATE: Tue, 04 Nov 2008 - 5:05pm

ORIGINATOR: JOE A. NELSON 11/04/08
NAME DATE

CHECKED BY: APPROVED BY:

DETAIL 12

FIA # | CHAINAGE: | DISCIPLINE #

TITLE
TYPICAL OPEN CUT WET CROSSING METHOD
FLOWING WATERBODY

SCALE N.T.S. | DWG No XL-00-ML-7000-511 | REV 1

CADD DRAWING: DO NOT MAKE MANUAL REVISIONS PLOTTED SIZE: ANSI A (8.5x11)

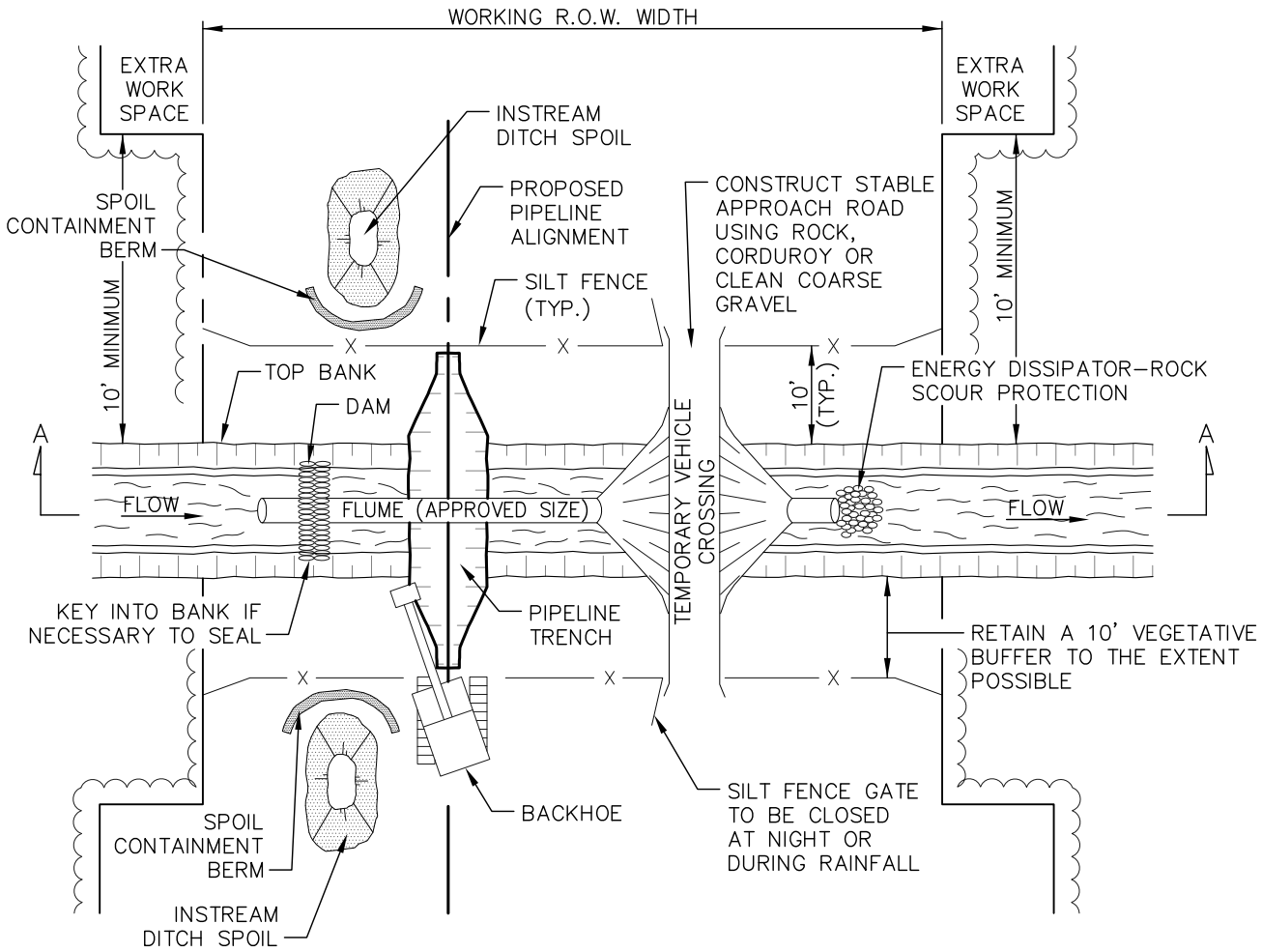

PLAN VIEW

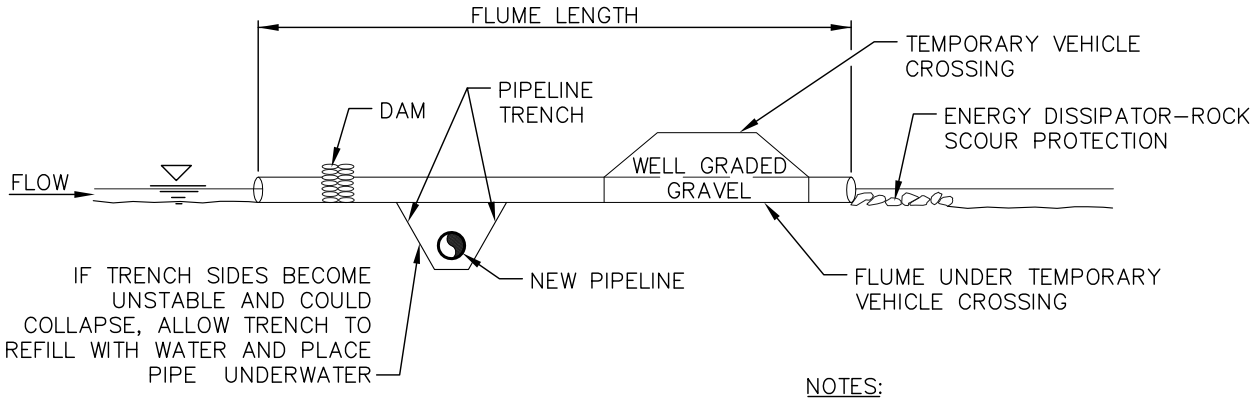

SECTION A–A

NOTES:

1. PIPELINE PLACEMENT WITHIN RIGHT-OF-WAY CONCEPTUAL ONLY.
2. SEE DETAIL 13A FOR CONSTRUCTION PROCEDURES.

REVISIONS

G:\2000Drafting and GIS\CADFiles\Drawings\Typical_Details\20081104\Crossing_Details.dwg 11/5/2008 3:17:58 PM CST

TransCanada
In business to deliver
KEYSTONE XL PROJECT

PREPARED BY:
TROW ENGINEERING CONSULTANTS, INC.
7505 NW Tiffany Springs Pkwy., Suite 400
Northpointe Circle I
Kansas City, MO 64153
Phone: 1-816-801-7063
Fax: 1-816-801-7048
Trow

ORIGINATOR: JOE A. NELSON (NAME) 9/08/08 (DATE)

CHECKED BY: APPROVED BY:

DETAIL 13

FIA #	CHAINAGE:	DISCIPLINE #

TITLE: TYPICAL DRY FLUME CROSSING METHOD

SCALE	DWG No	REV
N.T.S.	XL-00-ML-7000-512	

LAST PLOT DATE: Wed, 05 Nov 2008 - 4:55pm

CADD DRAWING: DO NOT MAKE MANUAL REVISIONS PLOTTED SIZE: ANSI A (8.5x11)

CONSTRUCTION PROCEDURES:

1. MARK OUT AND MAINTAIN LIMITS OF AUTHORIZED WORK AREAS WITH FENCING OR FLAGGING TAPE TO AVOID UNNECESSARY DISTURBANCE OF VEGETATION. ENSURE EQUIPMENT OPERATORS WORKING ON THE CROSSING HAVE BEEN BRIEFED ABOUT THIS PLAN AND THE MEASURE NEEDED TO PROTECT WATER QUALITY.
2. ALL NECESSARY EQUIPMENT AND MATERIALS TO BUILD THE FLUME MUST BE ON-SITE OR READILY AVAILABLE PRIOR TO COMMENCING IN-WATER WORK.
3. TO THE EXTENT POSSIBLE, MAINTAIN A MINIMUM 10 FT. VEGETATIVE BUFFER STRIP BETWEEN DISTURBED AREAS AND THE WATERCOURSE. INSTALL AND MAINTAIN A SILT FENCE OR STRAW BALE BARRIER UPSLOPE OF THE BUFFER STRIP ON EACH SIDE OF THE WATERCOURSE.
4. CONTRACTOR SHALL SUPPLY, INSTALL AND MAINTAIN SEDIMENT CONTROL STRUCTURES, AS DEPICTED OR ALONG DOWN GRADIENT SIDES OF WORK AREAS AND STAGING AREAS SUCH THAT NO HEAVILY SILT LADEN WATER ENTERS STREAM.
   a. NO HEAVILY SILT LADEN WATER SHALL BE DISCHARGED DIRECTLY INTO THE STREAM.
   b. EROSION AND SEDIMENT CONTROL STRUCTURE LOCATIONS AS DEPICTED ARE APPROXIMATE AND MAY BE ADJUSTED AS DIRECTED BY THE COMPANY INSPECTOR TO ACTUAL SITE CONDITIONS.
   c. SILT FENCE OR STRAW BALE INSTALLATIONS SHALL INCLUDE REMOVABLE SECTIONS TO FACILITATE ACCESS DURING CONSTRUCTION. UTILIZE STRAW BALE BARRIERS ONLY IN LIEU OF A SILT FENCE WHERE FREQUENT ACCESS IS REQUIRED.
   d. SEDIMENT LADEN WATER FROM TRENCH DEWATERING SHALL BE DISCHARGED TO A WELL VEGETATED UPLAND AREA INTO A STRAW BALE DEWATERING STRUCTURE OR GEOTEXTILE FILTER BAG.
   e. SEDIMENT CONTROL STRUCTURES MUST BE IN PLACE AT ALL TIMES ACROSS THE DISTURBED PORTIONS OF THE RIGHT-OF-WAY EXCEPT DURING EXCAVATION/INSTALLATION OF THE CROSSING PIPE.
   f. SOFT DITCH PLUGS MUST REMAIN IN PLACE AT CONVENIENT LOCATIONS TO SEPARATE MAINLINE DITCH FROM THE RIVER CROSSING UNTIL THE RIVER CROSSING IS INSTALLED AND BACKFILLED.
5. PIPE SHALL BE STRUNG AND WELDED FOR READY INSTALLATION PRIOR TO WATERCOURSE TRENCHING.
6. FLUME CAPACITY DURING DRY CROSSING SHALL BE SUFFICIENT TO ACCOMMODATE 1.5 TIMES THE FLOW MEASURED AT THE TIME OF CONSTRUCTION PROVIDED THAT THE FLUMES WILL BE IN PLACE NOT MORE THAN 96 HOURS AND NO PRECIPITATION IS FORECAST. FLUME CAPACITY FOR VEHICLE ACCESS SHALL BE SUFFICIENT TO PASS THE 2 YEAR DESIGN FLOW OR THE FLOW REASONABLY EXPECTED TO OCCUR DURING THE INSTALLATION. EXCESS FLUMES REQUIRED FOR LONGER TERM ACCESS SHALL BE CAPPED DURING DRY CROSSING PROCEDURES.
7. ENSURE THAT THE DAMS AND VEHICLE CROSSING ARE LOCATED FAR ENOUGH APART TO ALLOW FOR A WIDE EXCAVATION.
8. FLUMES ARE TO BE SET WITH 10 PERCENT OF THEIR DIAMETER BELOW STREAMBED LEVEL WHERE SOIL CONDITIONS PERMIT (OTHERWISE INSTALLED AT STREAM GRADE AND SLOPE.)
9. PLACE IMPERVIOUS DAMS AT EACH END OF THE FLUME, UPSTREAM FIRST, THEN DOWNSTREAM. ACCEPTABLE ALTERNATIVES INCLUDE GRAVEL WITH RIP-RAP PROTECTION, SAND BAGS, STEEL PLATE AND ROCKFILL. DURING INSTALLATION, INSTALL AN IMPERVIOUS MEMBRANE, IF NECESSARY, TO LIMIT LEAKAGE. DAMS MAY NEED KEYING INTO THE BANK AND STREAMBED.
   EXCAVATE TRENCH THROUGH PLUGS AND UNDER FLUME FROM BOTH SIDES. WORK IS TO BE COMPLETED AS QUICKLY AS POSSIBLE.
   a. LOWER IN PIPE BY PASSING UNDER FLUME AND BACKFILL IMMEDIATELY WITH SPOIL MATERIAL.
   b. IT IS NOT NECESSARY TO DEWATER THE IN-STREAM TRENCH, HOWEVER, DISPLACED WATER SHALL BE PUMPED TO A STABLE UPLAND AREA TO AVOID OVERTOPPING OF DAMS DURING PIPE PLACEMENT.
   c. IF THE SPOIL MATERIAL IS NOT SUITABLE, USE IMPORTED CLEAN GRANULAR MATERIAL.
   d. IF BLASTING IS REQUIRED, USE CONTROLLED BLASTING TECHNIQUES TO PREVENT DAMAGE TO THE FLOW CONVEYANCE SYSTEM. ALTERNATIVELY, BLASTING MAY BE ACCOMPLISHED PRIOR TO THE FLUME INSTALLATION BY DRILLING THROUGH THE OVERBURDEN.
10. EXCAVATED MATERIAL MUST NOT BE STOCKPILED WITHIN 10 FT. OF THE WATERCOURSE. THIS MATERIAL SHALL BE CONTAINED TO PREVENT SATURATED SOIL FROM FLOWING BACK INTO THE WATERCOURSE.
11. DEWATERING OF THE ONLAND TRENCH SHOULD OCCUR IN A STABLE VEGETATED AREA A MINIMUM OF 50 FT. FROM ANY WATERBODY. THE PUMP DISCHARGE SHOULD BE DIRECTED ONTO A STABLE SPILL PAD CONSTRUCTED OF ROCKFILL OR TIMBERS TO PREVENT LOCALIZED EROSION. THE DISCHARGE WATER SHOULD ALSO BE FORCED INTO SHEET FLOW IMMEDIATELY BEYOND THE SPILL PAD BY USING STRAW BALES AND THE NATURAL TOPOGRAPHY.
12. FLUMES SHOULD BE REMOVED AS SOON AS POSSIBLE, WHEN NO LONGER REQUIRED FOR PIPE LAYING OR FOR ROAD ACCESS, IN THE FOLLOWING MANNER:
   a. REMOVE THE VEHICLE CROSSING RAMP. BANKS ARE TO BE RESTORED TO A STABLE ANGLE AND PROTECTED WITH EROSION RESISTANT MATERIAL COMPATIBLE WITH THE FLOW CONDITIONS (E.G., EROSION CONTROL BLANKETS, CRIBBING, ROCK RIP-RAP, ETC.) TO THE MAXIMUM EXTENT POSSIBLE BEFORE REMOVING THE DAMS.
   b. REMOVE DOWNSTREAM DAM.
   c. REMOVE UPSTREAM DAM.
   d. REMOVE FLUME.
   e. COMPLETE BANK TRIMMING AND EROSION PROTECTION. IF SANDBAGS ARE USED FOR THE DAMS, PLACE AND REMOVE BY HAND TO AVOID EQUIPMENT BREAKING BAGS.
13. RESTORE THE STREAMBED AND BANKS TO APPROXIMATE PRE-CONSTRUCTION CONTOURS, BUT NOT TO EXCEED 2 HORIZONTAL TO 1 VERTICAL.
   a. INSTALL PERMANENT EROSION AND SEDIMENT CONTROL STRUCTURES AS INDICATED ON A SITE SPECIFIC BASIS. IN THE ABSENCE OF SITE SPECIFIC INFORMATION, A FLEXIBLE CHANNEL LINER SUCH AS NAG C125 OR C350 WHICH IS CAPABLE OF WITHSTANDING ANTICIPATED FLOW SHALL BE INSTALLED. ALTERNATIVELY, ROCK RIP-RAP SHALL BE INSTALLED.
   b. ANY MATERIALS PLACED IN THE STREAM TO FACILITATE CONSTRUCTION SHALL BE REMOVED DURING RESTORATION. BANKS SHALL BE STABILIZED AND TEMPORARY SEDIMENT BARRIERS INSTALLED AS SOON AS POSSIBLE AFTER CROSSING, BUT WITHIN 24 HOURS OF COMPLETING THE CROSSING.
   c. MAINTAIN A SILT FENCE OR STRAW BALE BARRIER ALONG THE WATER COURSE UNTIL VEGETATION IS ESTABLISHED IN ADJACENT DISTURBED AREAS.

REVISIONS | 1 | REVISED TITLE

G:\2000Drafting and GIS\CADFiles\Drawings\Typical_Details\20081104\Crossing_Details.dwg 11/5/2008 3:17:58 PM CST

TransCanada
In business to deliver
KEYSTONE XL PROJECT
PREPARED BY:
TROW ENGINEERING CONSULTANTS, INC.
7505 NW Tiffany Springs Pkwy., Suite 400
Northpointe Circle I
Kansas City, MO 64153
Phone: 1-816-801-7063
Fax: 1-816-801-7048
Trow

ORIGINATOR: JOE A. NELSON (NAME) 9/08/08 (DATE)

CHECKED BY: | APPROVED BY:

DETAIL 13A

FIA # | CHAINAGE: | DISCIPLINE #

TITLE: TYPICAL DRY FLUME CROSSING METHOD

SCALE: N.T.S. | DWG No: XL-00-ML-7000-513 | REV: 1

LAST PLOT DATE: Wed, 05 Nov 2008 - 4:47pm

CADD DRAWING: DO NOT MAKE MANUAL REVISIONS PLOTTED SIZE: ANSI A (8.5x11)

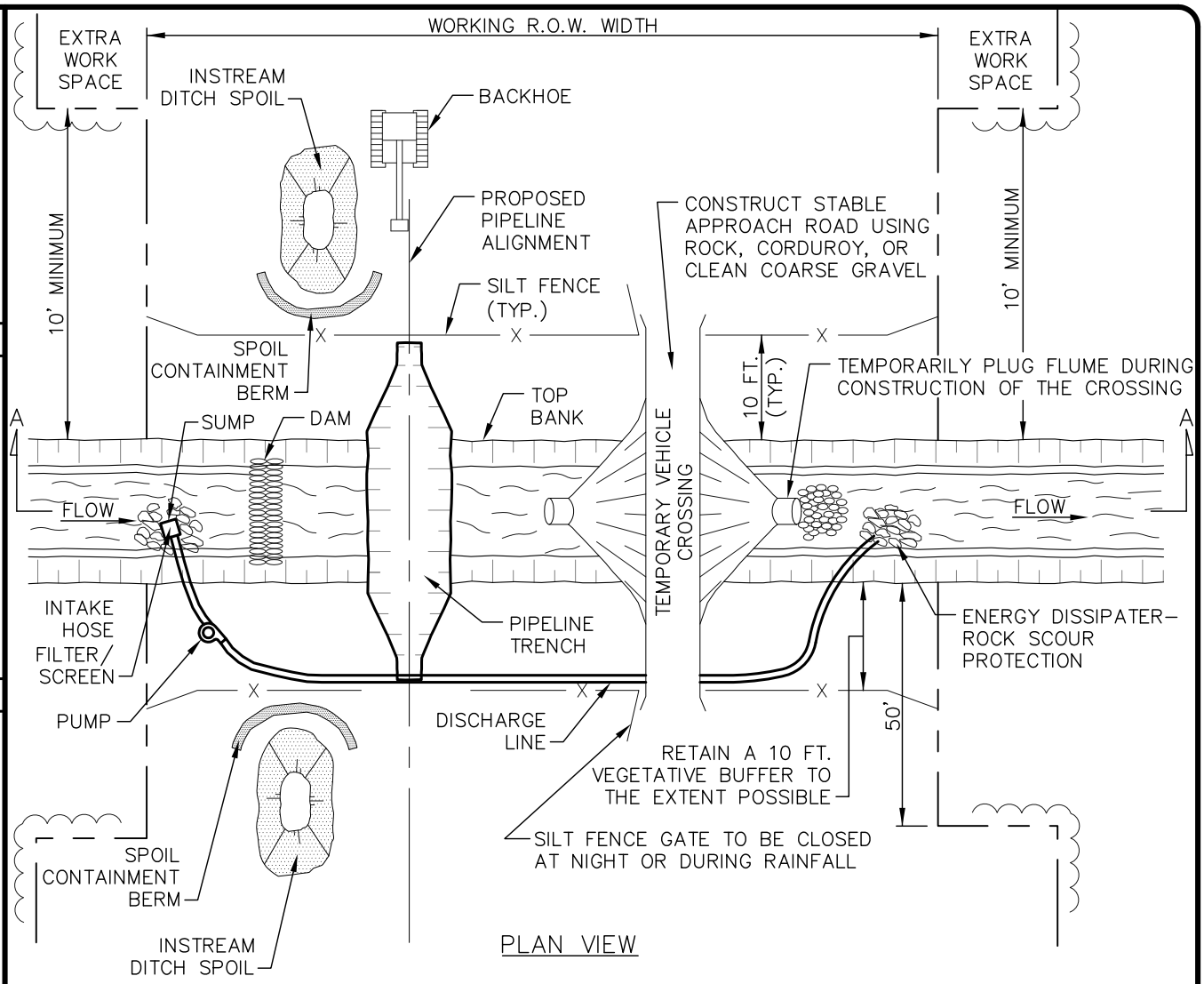

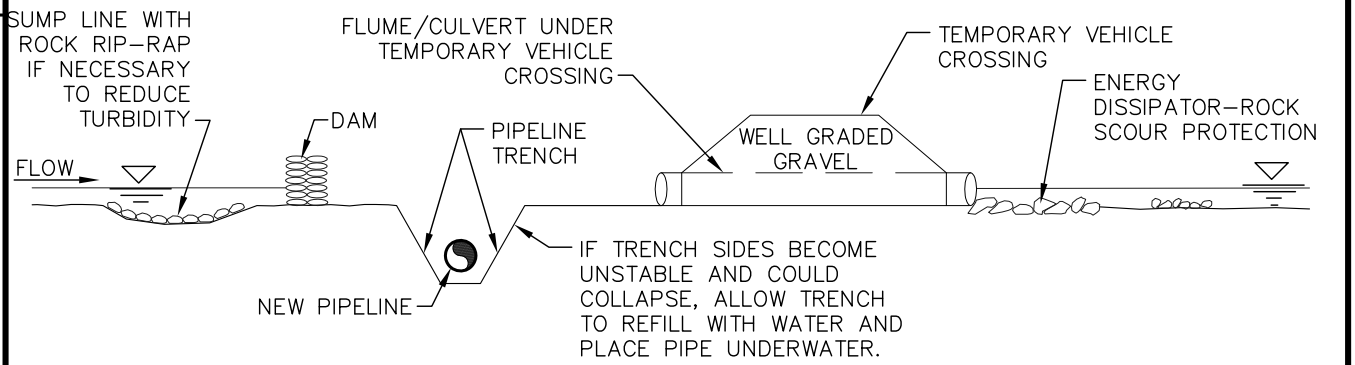

SECTION A-A

NOTES:

1. PIPELINE PLACEMENT WITHIN RIGHT-OF-WAY CONCEPTUAL ONLY.
2. SEE DETAIL 14A FOR CONSTRUCTION PROCEDURES.

REVISIONS

G:\2000Drafting and GIS\CADFiles\Drawings\Typical_Details\20081104\Crossing_Details.dwg 11/5/2008 3:17:58 PM CST

TransCanada
In business to deliver
KEYSTONE XL PROJECT

PREPARED BY:
TROW ENGINEERING CONSULTANTS, INC.
7505 NW Tiffany Springs Pkwy., Suite 400
Northpointe Circle I
Kansas City, MO 64153
Phone: 1-816-801-7063
Fax: 1-816-801-7048
Trow

ORIGINATOR: JOE A. NELSON (NAME) 9/08/08 (DATE)

CHECKED BY: | APPROVED BY:

DETAIL 14

FIA #	CHAINAGE:	DISCIPLINE #

TITLE: TYPICAL DAM AND PUMP CROSSING

SCALE	DWG No	REV
N.T.S.	XL-00-ML-7000-514	

LAST PLOT DATE: Wed, 05 Nov 2008 - 4:56pm

CADD DRAWING: DO NOT MAKE MANUAL REVISIONS PLOTTED SIZE: ANSI A (8.5x11)

CONSTRUCTION PROCEDURES:

1. WHERE NECESSARY, OBTAIN PRIOR APPROVAL BEFORE USING THE DAM AND PUMP METHOD.
2. IF THERE IS ANY FLOW IN THE WATERCOURSE, INSTALL PUMPS TO MAINTAIN STREAMFLOW AROUND THE BLOCKED OFF SECTIONS OF CHANNEL. THE PUMP IS TO HAVE 1.5 TIMES THE PUMPING CAPACITY OF ANTICIPATED FLOW. A SECOND STANDBY PUMP OF EQUAL CAPACITY IS TO BE READILY AVAILABLE AT ALL TIMES. AN ENERGY DISSIPATER IS TO BE BUILT TO ACCEPT PUMP DISCHARGE WITHOUT STREAMBED OR STREAMBANK EROSION. IF THE CROSSING IS PROLONGED BEYOND ONE DAY THE OPERATION NEEDS TO BE MONITORED OVERNIGHT.
3. SCHEDULE INSTREAM ACTIVITY FOR LOW FLOW PERIODS IF POSSIBLE.
4. MARK OUT AND MAINTAIN LIMITS OF AUTHORIZED WORK AREAS WITH FENCING OR FLAGGING TAPE TO AVOID UNNECESSARY DISTURBANCE OF VEGETATION. ENSURE EQUIPMENT OPERATORS WORKING ON THE CROSSING HAVE BEEN BRIEFED ABOUT THIS PLAN AND THE MEASURES NEEDED TO PROTECT WATER QUALITY. INSTALL PRE-WORK SEDIMENT CONTROL MEASURES AS SPECIFIED IN THE PLAN. ALL NECESSARY EQUIPMENT AND MATERIALS TO BUILD THE DAMS AND TO PUMP WATER MUST BE ON SITE OR READILY AVAILABLE PRIOR TO COMMENCING IN-WATER CONSTRUCTION. PIPE SHOULD BE STRUNG, WELDED AND COATED AND READY FOR INSTALLATION PRIOR TO WATERCOURSE TRENCHING.
5. CONTRACTOR SHALL SUPPLY, INSTALL AND MAINTAIN SEDIMENT CONTROL STRUCTURES, AS DEPICTED AND ALONG DOWN GRADIENT SIDES OF WORK AREAS AND STAGING AREAS SUCH THAT NO HEAVILY SILT LADEN WATER ENTERS STREAM.
   a. NO HEAVILY SILT LADEN WATER SHALL BE DISCHARGED DIRECTLY INTO THE STREAM.
   b. EROSION AND SEDIMENT CONTROL STRUCTURE LOCATIONS AS DEPICTED ARE APPROXIMATE AND MAY BE ADJUSTED AS DIRECTED BY THE COMPANY INSPECTOR TO ACTUAL SITE CONDITIONS.
   c. SILT FENCE OR STRAW BALE INSTALLATIONS SHALL INCLUDE REMOVABLE SECTIONS TO FACILITATE ACCESS DURING CONSTRUCTION. UTILIZE STRAW BALE BARRIERS ONLY IN LIEU OF A SILT FENCE WHERE FREQUENT ACCESS IS REQUIRED.
   d. SEDIMENT LADEN WATER FROM TRENCH DEWATERING SHALL BE DISCHARGED TO A WELL VEGETATED UPLAND AREA INTO A STRAW BALE DEWATERING STRUCTURE OR GEOTEXTILE FILTER BAG.
   e. SEDIMENT CONTROL STRUCTURES MUST BE IN PLACE AT ALL TIMES ACROSS THE DISTURBED PORTIONS OF THE RIGHT-OF-WAY EXCEPT DURING EXCAVATION/INSTALLATION OF THE CROSSING PIPE.
   f. SOFT DITCH PLUGS MUST REMAIN IN PLACE AT CONVENIENT LOCATIONS TO SEPARATE MAINLINE DITCH FROM THE RIVER CROSSING UNTIL THE RIVER CROSSING IS INSTALLED AND BACKFILLED.
6. TO THE EXTENT POSSIBLE, MAINTAIN A MINIMUM 10 FEET VEGETATIVE BUFFER STRIP BETWEEN DISTURBED AREAS AND THE WATERCOURSE. INSTALL AND MAINTAIN A SILT FENCE UPSLOPE OF THE BUFFER STRIP ON EACH SIDE OF THE WATERCOURSE. THE SILT FENCE SHOULD INCORPORATE REMOVABLE "GATES" AS REQUIRED TO ALLOW ACCESS WHILE MAINTAINING EASE OF REPLACEMENT FOR OVERNIGHT OR DURING PERIODS OF RAINFALL.
7. CONSTRUCT A TEMPORARY SUMP UPSTREAM OF THE DAM AND LINE WITH ROCKFILL IF A NATURAL POOL DOES NOT EXIST. INSTALL THE PUMP OR PUMP INTAKE IN THE POOL OR SUMP. DISCHARGE WATER ONTO AN ENERGY DISSIPATER DOWNSTREAM OF THE WORK AREA.
8. EXCAVATED MATERIAL MUST NOT BE STOCKPILED WITHIN 10 FT. OF THE WATERCOURSE. THIS MATERIAL MUST BE CONTAINED WITHIN BERM CONTAINMENT, WITH SECONDARY SILT FENCE PROTECTION TO PREVENT SATURATED SOIL FROM FLOWING BACK INTO THE WATERCOURSE.
9. CHEMICALS, FUELS, LUBRICATING OILS SHALL NOT BE STORED AND EQUIPMENT REFUELED WITHIN 100 FT. OF THE WATERBODY. PUMPS ARE TO BE REFUELED AS PER THE SPCC PLANS.
10. STAGING AREAS ARE TO BE LOCATED AT LEAST 10 FT. FROM THE WATER'S EDGE (WHERE TOPOGRAPHIC CONDITIONS PERMIT) AND SHALL BE THE MINIMUM SIZE NEEDED.
11. DAMS ARE TO BE MADE OF STEEL PLATE, INFLATABLE PLASTIC DAM, SAND BAGS, COBBLES, WELL GRADED COARSE GRAVEL FILL, OR ROCK FILL. DAMS MAY NEED KEYING INTO THE BANKS AND STREAMBED. ENSURE THAT THE DAM AND VEHICLE CROSSING ARE LOCATED FAR ENOUGH APART TO ALLOW FOR A WIDE EXCAVATION. CAP FLUMES USED UNDER VEHICLE CROSSING DURING DRY CROSSING.
12. DEWATER AREA BETWEEN DAMS IF POSSIBLE. DEWATERING SHOULD OCCUR IN A STABLE VEGETATIVE AREA A MINIMUM OF 50 FT. FROM ANY WATERBODY. THE PUMP DISCHARGE SHOULD BE DISCHARGED ONTO A STABLE SPILL PAD CONSTRUCTED OF ROCKFILL SANDBAGS, OR TIMBERS TO PREVENT LOCALIZED EROSION. THE DISCHARGE WATER SHOULD ALSO BE FORCED INTO SHEET FLOW IMMEDIATELY BEYOND THE SPILL PAD BY USING STRAW BALES AND THE NATURAL TOPOGRAPHY DISCHARGED WATER SHALL NOT BE ALLOWED TO FLOW INTO ANY WATERCOURSE OR WETLAND. IF IT IS NOT POSSIBLE TO DEWATER THE EXCAVATION DUE TO SOILS WITH A HIGH HYDRAULIC CONDUCTIVITY, THE EXCAVATION AND PIPE PLACEMENT IS TO BE CARRIED OUT IN THE STANDING WATER. PUMP ANY DISPLACED WATER AS DESCRIBED ABOVE TO PREVENT OVERTOPPING OF DAMS.
13. EXCAVATE TRENCH THROUGH PLUGS AND STREAMBED FROM BOTH SIDES, RE-POSITIONING DISCHARGE HOSE AS NECESSARY. LOWER THE PIPE IN THE TRENCH AND BACKFILL IMMEDIATELY. DURING THIS OPERATION WORK IS TO BE COMPLETED AS QUICKLY AS POSSIBLE.
14. CONTRACTOR SHALL RESTORE THE STREAM BED AND BANKS TO APPROXIMATE PRE-CONSTRUCTION CONTOURS, BUT NOT TO EXCEED 2 HORIZONTAL TO 1 VERTICAL.
   a. CONTRACTOR SHALL INSTALL PERMANENT EROSION AND SEDIMENT CONTROL STRUCTURES AS INDICATED ON A SITE SPECIFIC BASIS. IN THE ABSENCE OF SITE SPECIFIC INFORMATION, A FLEXIBLE CHANNEL LINER SUCH AS NAG C125 OR C350 WHICH IS CAPABLE OF WITHSTANDING ANTICIPATED FLOW SHALL BE INSTALLED. ALTERNATIVELY, ROCK RIP-RAP SHALL BE INSTALLED.
   b. ANY MATERIALS PLACED IN THE STREAM TO FACILITATE CONSTRUCTION SHALL BE REMOVED DURING RESTORATION. BANKS SHALL BE STABILIZED AND TEMPORARY SEDIMENT BARRIERS INSTALLED AS SOON AS POSSIBLE AFTER CROSSING, BUT WITHIN 24 HOURS OF COMPLETING THE CROSSING.
   c. MAINTAIN A SILT FENCE OR STRAW BALE BARRIER ALONG THE WATER COURSE UNTIL VEGETATION IS ESTABLISHED IN ADJACENT DISTURBED AREAS.
15. WHEN THE STREAMBED HAS BEEN RESTORED, THE CREEK BANKS ARE TO BE CONTOURED TO A STABLE ANGLE AND PROTECTED WITH EROSION RESISTANT MATERIAL COMPATIBLE WITH FLOW VELOCITY BETWEEN DAMS (E.G., EROSION CONTROL BLANKETS, CRIBBING, ROCK RIP-RAP, ETC.). THE DAMS ARE TO BE REMOVED DOWNSTREAM FIRST. KEEP PUMP RUNNING UNTIL NORMAL FLOW IS RESUMED. COMPLETE BANK TRIMMING AND EROSION PROTECTION. IF SANDBAGS ARE USED FOR THE DAMS, PLACE AND REMOVE BY HAND TO AVOID EQUIPMENT BREAKING BAGS.

REVISIONS	REVISED TITLE
1	

G:\2000Drafting and GIS\CADFiles\Drawings\Typical_Details\20081104\Crossing_Details.dwg 11/5/2008 3:17:58 PM CST

TransCanada
In business to deliver
KEYSTONE XL PROJECT
PREPARED BY:
TROW ENGINEERING CONSULTANTS, INC.
7505 NW Tiffany Springs Pkwy., Suite 400
Northpointe Circle I
Kansas City, MO 64153
Phone: 1-816-801-7063
Fax: 1-816-801-7048
Trow

ORIGINATOR: JOE A. NELSON (NAME) 9/08/08 (DATE)

CHECKED BY: | APPROVED BY:

DETAIL 14A

FIA # | CHAINAGE: | DISCIPLINE #

TITLE: TYPICAL DAM AND PUMP CROSSING

SCALE: N.T.S. | DWG No: XL-00-ML-7000-515 | REV: 1

LAST PLOT DATE: Wed, 05 Nov 2008 - 4:47pm

CADD DRAWING: DO NOT MAKE MANUAL REVISIONS PLOTTED SIZE: ANSI A (8.5x11)

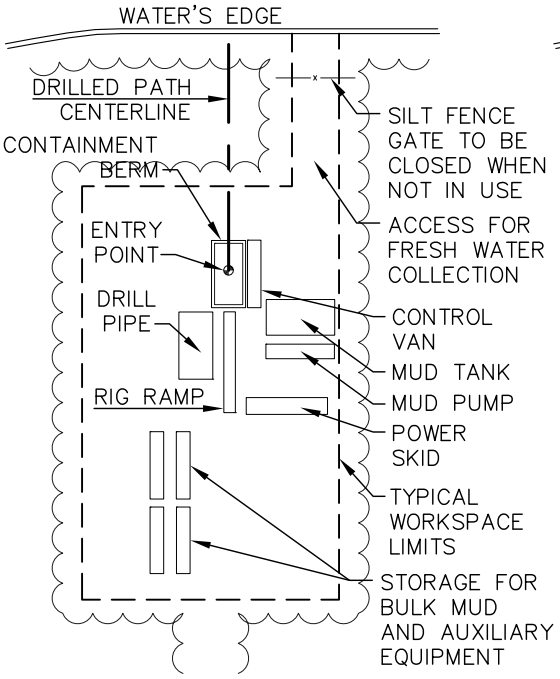

SITE PLAN
ENTRY SIDE

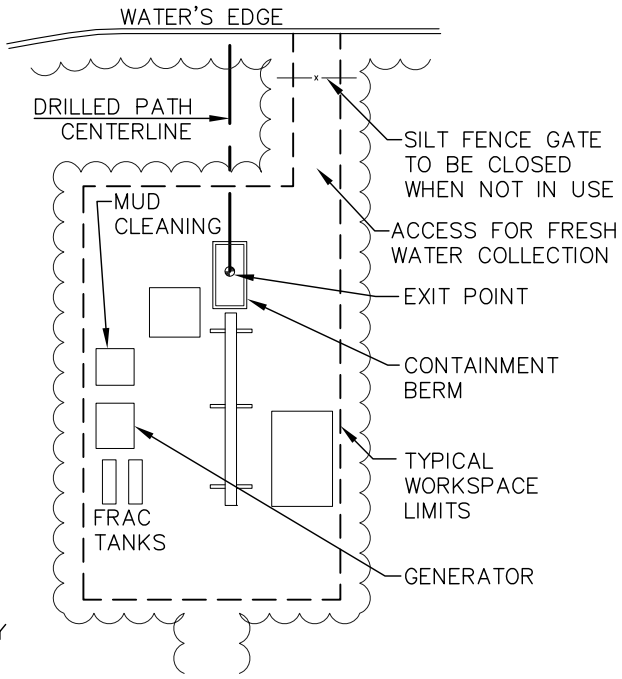

SITE PLAN
EXIT SIDE

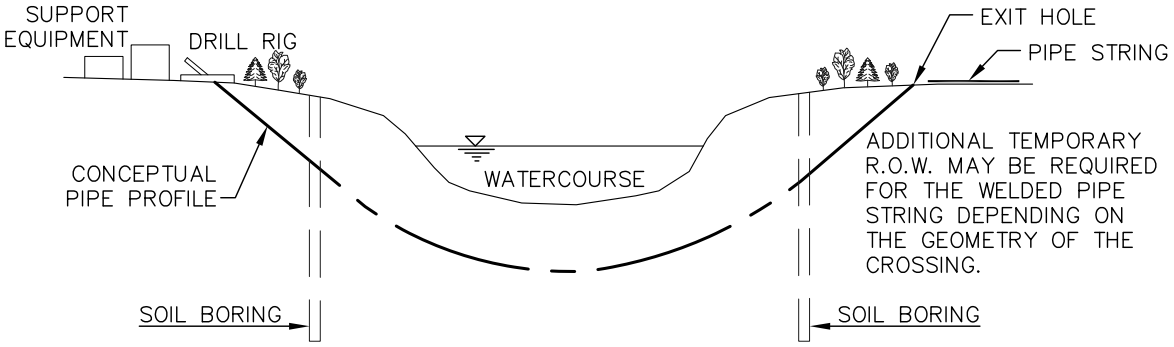

PROFILE

NOTES:

1. SET UP DRILLING EQUIPMENT A MINIMUM OF 100 FEET FROM THE EDGE OF THE WATERCOURSE. LIMIT CLEARING BETWEEN DRILL ENTRY AND EXIT POINT TO BRUSH CLEARING OF A 10-FOOT WIDE STRIP AS NECESSARY TO MONITOR DRILLING ACTIVITIES AND OBTAIN WATER FOR HYDROSTATIC TESTING AND DRILLING MUD.
2. ENSURE THAT ONLY BENTONITE-BASED DRILLING MUD IS USED.
3. INSTALL SUITABLE DRILLING MUD TANKS OR SUMPS TO PREVENT CONTAMINATION OF WATERCOURSE.
4. INSTALL BERMS DOWNSLOPE FROM THE DRILL ENTRY AND ANTICIPATED EXIT POINTS TO CONTAIN ANY RELEASE OF DRILLING MUD.
5. DISPOSE OF DRILLING MUD IN ACCORDANCE WITH THE APPROPRIATE REGULATORY AUTHORITY REQUIREMENTS.

REVISIONS 1 Updated drawing notes

G:\2000Drafting and GIS\CADFiles\Drawings\Typical_Details\20081104\Erosion_Details.dwg 11/5/2008 1:23:31 PM CST

TransCanada
In business to deliver
KEYSTONE XL PROJECT

PREPARED BY:
TROW ENGINEERING CONSULTANTS, INC.
7505 NW Tiffany Springs Pkwy., Suite 400
Northpointe Circle I
Kansas City, MO 64153
Phone: 1-816-801-7063
Fax: 1-816-801-7048
Trow

LAST PLOT DATE: Wed, 05 Nov 2008 - 3:29pm

ORIGINATOR: JOE A. NELSON 09/08/08 (NAME / DATE)

CHECKED BY: | APPROVED BY:

DETAIL 15

FIA #	CHAINAGE:	DISCIPLINE #

TITLE: TYPICAL HORIZONTAL DRILL (HDD) SITE PLAN & PROFILE

SCALE	DWG No	REV
N.T.S.	XL-00-ML-7000-516	1

CADD DRAWING: DO NOT MAKE MANUAL REVISIONS PLOTTED SIZE: ANSI A (8.5x11)

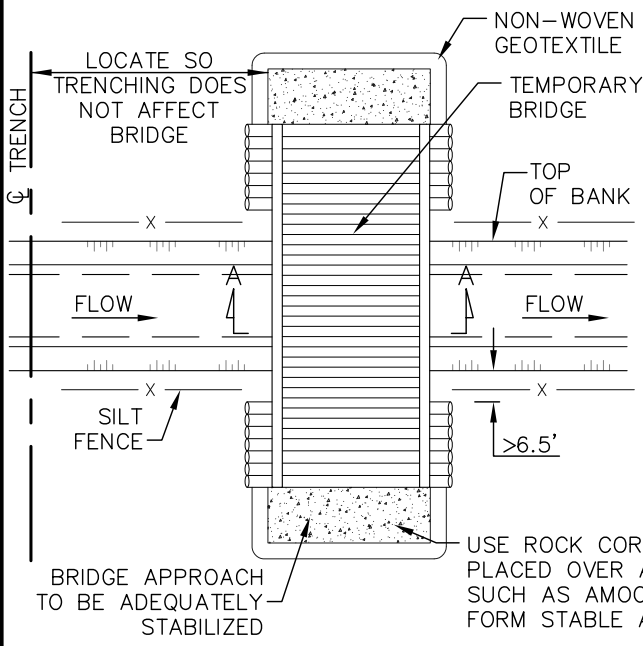

PLAN VIEW

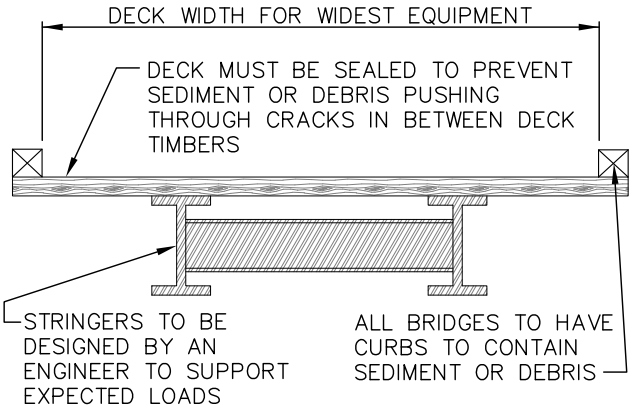

SECTION A–A

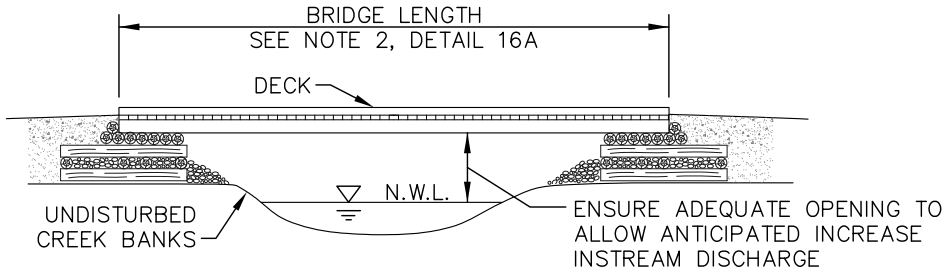

BRIDGE PROFILE

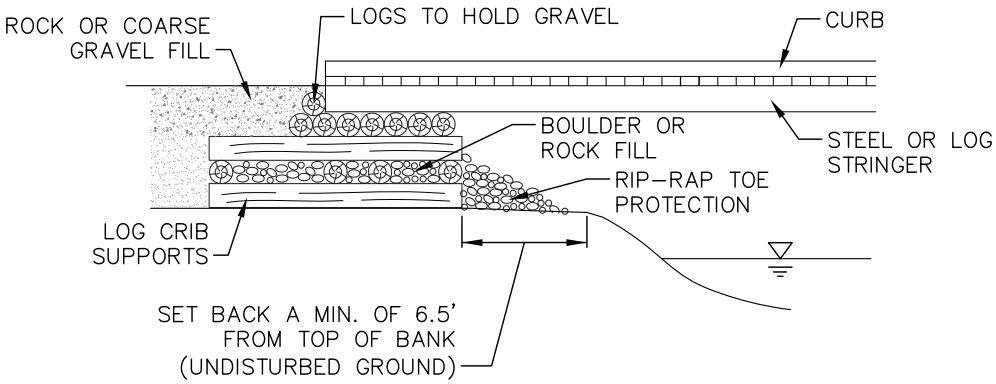

TYPICAL TEMPORARY CRIB ABUTMENT

REVISIONS

G:\2000Drafting and GIS\CADFiles\Drawings\Typical_Details\20081104\Crossing_Details.dwg 11/5/2008 3:17:58 PM CST

TransCanada
In business to deliver
KEYSTONE XL PROJECT

PREPARED BY:
TROW ENGINEERING CONSULTANTS, INC.
7505 NW Tiffany Springs Pkwy., Suite 400
Northpointe Circle I
Kansas City, MO 64153
Phone: 1-816-801-7063
Fax: 1-816-801-7048
Trow

ORIGINATOR: JOE A. NELSON (NAME) 9/08/08 (DATE)

CHECKED BY: | APPROVED BY:

DETAIL 16

FIA #	CHAINAGE:	DISCIPLINE #

TITLE: TYPICAL TEMPORARY BRIDGE CROSSING

SCALE	DWG No	REV
N.T.S.	XL-00-ML-7000-517	

LAST PLOT DATE: Wed, 05 Nov 2008 - 5:25pm

CADD DRAWING: DO NOT MAKE MANUAL REVISIONS PLOTTED SIZE: ANSI A (8.5x11)

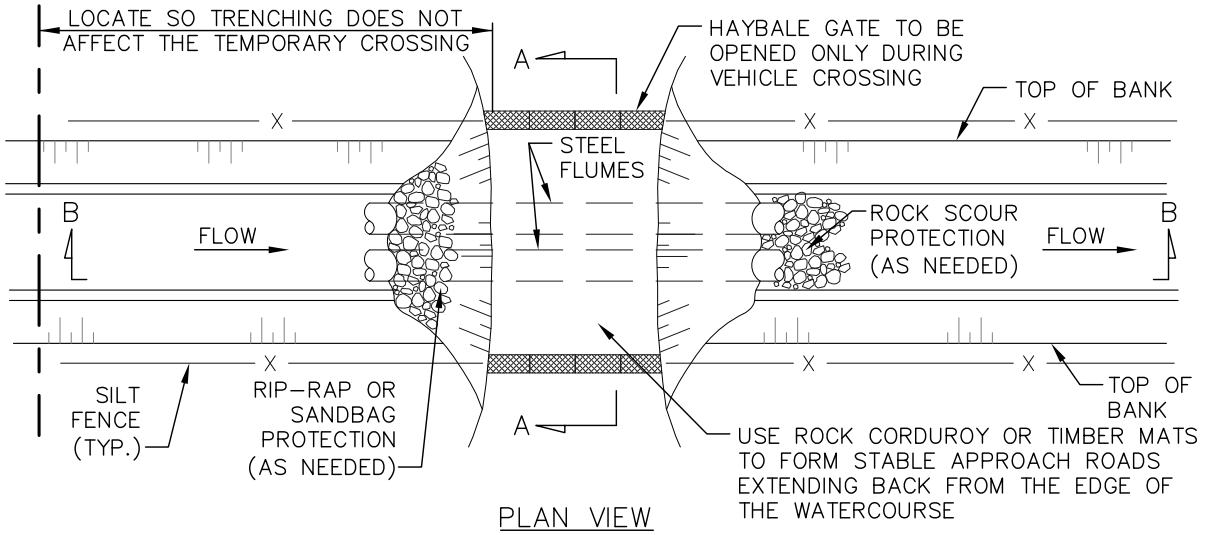

PLAN VIEW

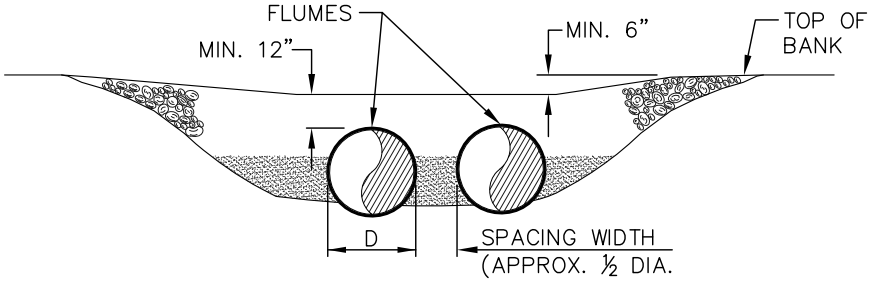

SECTION A–A

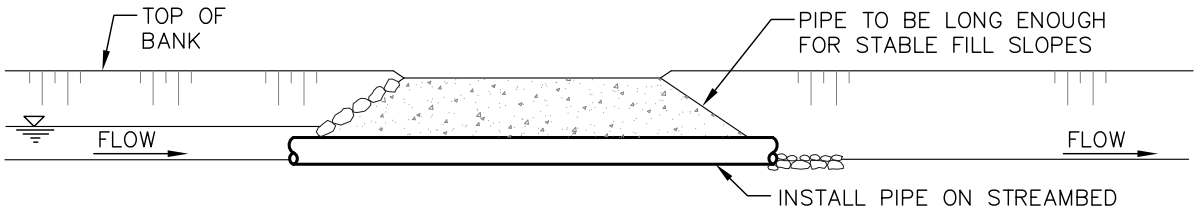

SECTION B–B

CONSTRUCTION PROCEDURES:

THE FOLLOWING IS A SEQUENCE OF CONSTRUCTION AND PROCEDURES MEASURES TO BE FOLLOWED AT ALL TEMPORARY FLUME VEHICLE CROSSINGS.

1. A PORTABLE FLEXI–FLOAT, OR TEMPORARY BRIDGE MAY BE SUBSTITUTED FOR THE TEMPORARY FLUME CROSSING.
2. THE LENGTH OF THE FLUME SHALL BE SUFFICIENT TO SPAN THE ENTIRE AREA REQUIRED FOR VEHICULAR ACCESS, EXTENDING 4 FEET BEYOND TOE OF FILL MATERIAL, SO TRENCHING WILL NOT AFFECT THE ROAD CROSSING. A LONGER PIPE IS TO BE USED, IF NEEDED, TO MAINTAIN STABLE SIDE SLOPES. FLUME CAPACITY TO BE BASED ON THE 2–YEAR DESIGN FLOW OR MAXIMUM FLOW ANTICIPATED TO OCCUR DURING INSTALLATION, AS SPECIFIED IN CONSTRUCTION DOCUMENTS.
3. WHERE PRACTICAL, BACKFILL AROUND THE PIPES AT THE ROAD WITH CLEAN, COARSE ROCK FILL MATERIAL. IF SCOUR IS POSSIBLE, RIP–RAP IS TO BE PLACED ON THE WATERBODY BED DOWNSTREAM OF THE PIPE OUTLET EXTENDING A MINIMUM OF TWO PIPE DIAMETERS. ALTERNATIVELY, TIMBER EQUIPMENT MATS, SAND BAGS OR TIMBER CORDUROY MAY BE USED TO FORM THE TRAVEL SURFACE.
4. TO REDUCE DEBRIS ENTERING THE WATERBODY FROM EQUIPMENT TRACKS, THE APPROACH ROAD LEADING TO THE CULVERT CROSSING MUST BE RAISED AND STABLE SO EQUIPMENT LOADS ARE SUPPORTED A SUFFICIENT DISTANCE BACK FROM THE WATER. IF CUTS ARE NEEDED TO OBTAIN A SATISFACTORY GRADE, THEY ARE TO BE DUG WITH SIDE DITCHES AND STABLE SLOPES. EROSION AND SEDIMENT CONTROL MEASURES ARE TO BE INSTALLED TO LIMIT THE POTENTIAL FOR SEDIMENT TO ENTER THE WATERBODY (E.G., CHECK DAMS, SILT FENCE, RIP–RAP, SEED AND MULCH, SEDIMENT TRAPS, ETC.).
5. PERIODICALLY CHECK THE TEMPORARY CROSSING INSTALLATION AND REMOVE ANY BUILD–UP OF SEDIMENT OR DEBRIS ON THE BRIDGE. DISPOSE OF THIS MATERIAL AT LEAST 100 FEET FROM THE WATERBODY AND ABOVE THE HIGH WATER LEVEL.
6. FOLLOWING COMPLETION OF THE CROSSING, REMOVE ROCKFILL IN/OR AROUND FLUME PIPES FROM THE WATERBODY OR WETLAND.
7. RESTORE STREAM BANKS AND WATERBODY BOTTOM.

REVISIONS

G:\2000Drafting and GIS\CADFiles\Drawings\Typical_Details\20081104\Crossing_Details.dwg 11/5/2008 3:17:58 PM CST

TransCanada
In business to deliver
KEYSTONE XL PROJECT

PREPARED BY:
TROW ENGINEERING CONSULTANTS, INC.
7505 NW Tiffany Springs Pkwy., Suite 400
Northpointe Circle I
Kansas City, MO 64153
Phone: 1–816–801–7063
Fax: 1–816–801–7048
Trow

ORIGINATOR: JOE A. NELSON (NAME) 9/08/08 (DATE)

CHECKED BY: | APPROVED BY:

DETAIL 17

FIA #	CHAINAGE:	DISCIPLINE #

TITLE: TYPICAL FLUME BRIDGE CROSSING

SCALE	DWG No	REV
N.T.S.	XL–00–ML–7000–518	

LAST PLOT DATE: Wed, 05 Nov 2008 – 5:27pm

CADD DRAWING: DO NOT MAKE MANUAL REVISIONS PLOTTED SIZE: ANSI A (8.5x11)

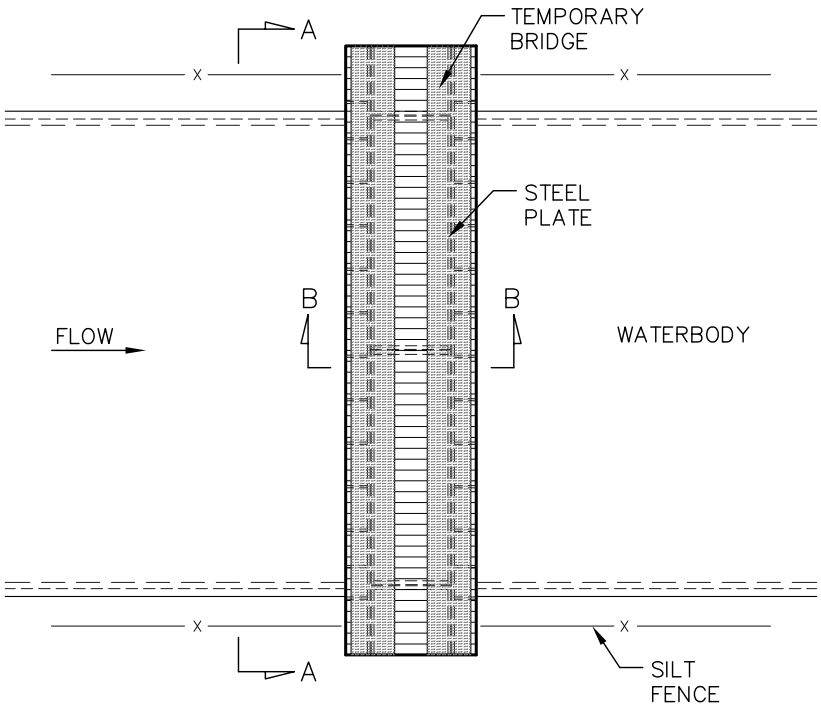

PLAN VIEW

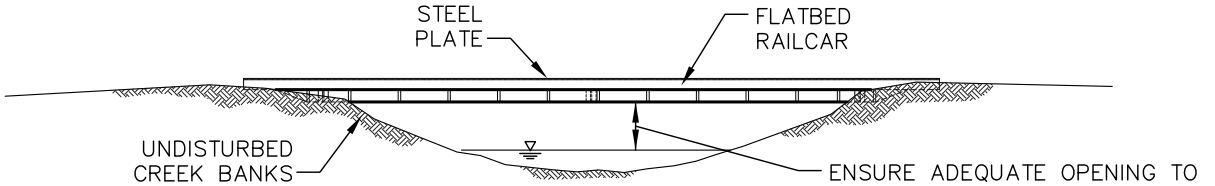

SECTION A–A

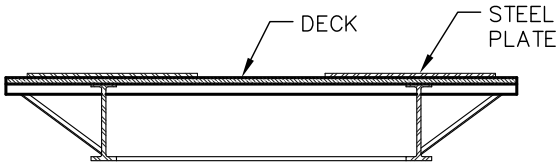

SECTION B–B

REVISIONS

G:\2000Drafting and GIS\CADFiles\Drawings\Typical_Details\20081104\Crossing_Details.dwg 11/5/2008 3:17:58 PM CST

TransCanada
In business to deliver
KEYSTONE XL PROJECT

PREPARED BY:
TROW ENGINEERING CONSULTANTS, INC.
7505 NW Tiffany Springs Pkwy., Suite 400
Northpointe Circle I
Kansas City, MO 64153
Phone: 1–816–801–7063
Fax: 1–816–801–7048
Trow

ORIGINATOR:
JOE A. NELSON (NAME) 9/08/08 (DATE)
CHECKED BY:
APPROVED BY:

DETAIL 18

FIA #	CHAINAGE:	DISCIPLINE #

TITLE
TYPICAL RAILCAR BRIDGE CROSSING

SCALE	DWG No	REV
N.T.S.	XL–00–ML–7000–519	

LAST PLOT DATE:
Wed, 05 Nov 2008 – 5:32pm

CADD DRAWING: DO NOT MAKE MANUAL REVISIONS PLOTTED SIZE: ANSI A (8.5x11)

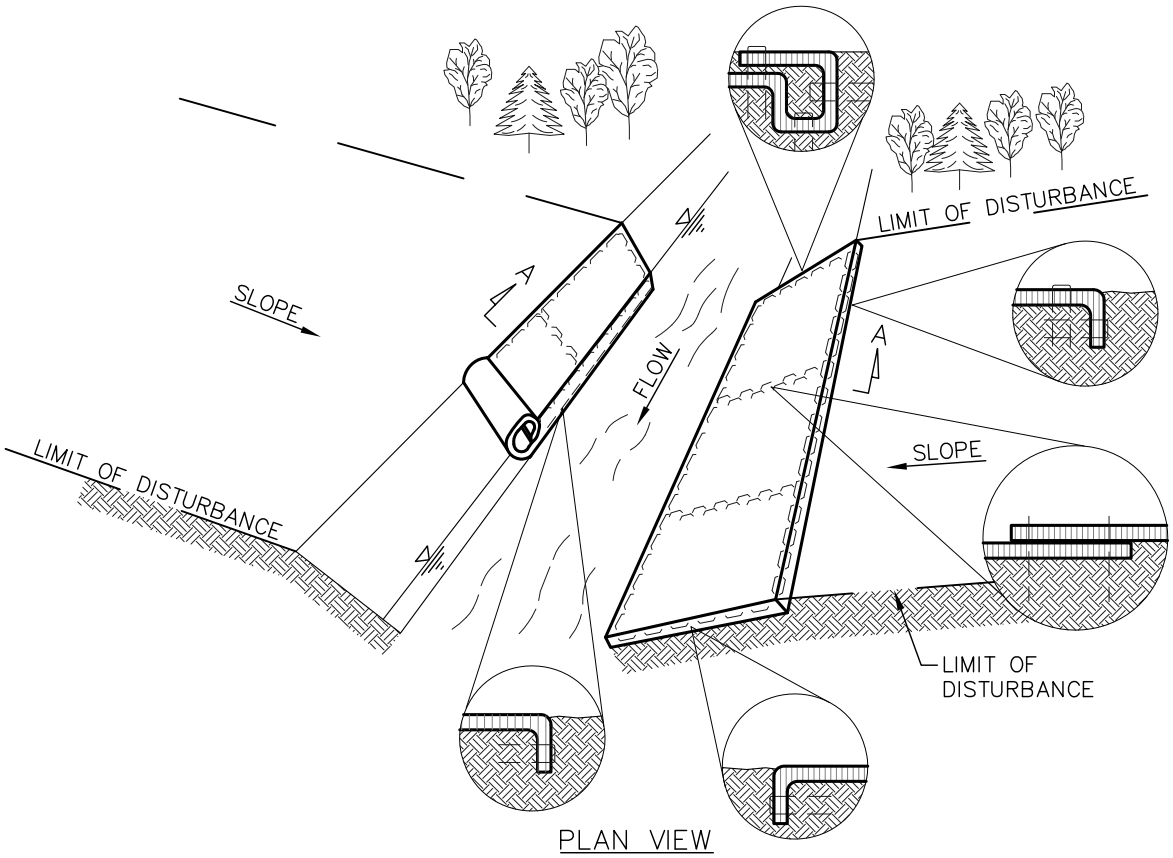

PLAN VIEW

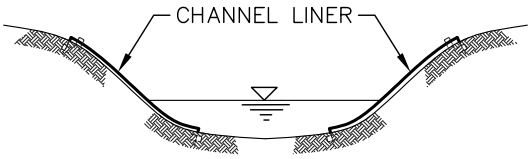

SECTION A–A

NOTES:

1. INSTALL AND ANCHOR LINERS FOLLOWING MANUFACTURER'S INSTRUCTIONS.
2. PREPARE SOIL BEFORE INSTALLING CHANNEL LINER, INCLUDING THE APPLICATION OF FERTILIZER AND SEED. CHANNEL LINERS SHOULD EXTEND COMPLETELY ACROSS DISTURBED BANK AREAS TO PROTECT ERODIBLE SURFACES.
3. BEGIN AT THE END OF THE CHANNEL BY ANCHORING THE LINER IN A TRENCH. BACKFILL AND COMPACT THE TRENCH AFTER STAPLING.
4. ROLL LINER IN DIRECTION OF WATER FLOW.
5. INSTALL LINERS END–OVER–END (SHINGLE STYLE) WITH OVERLAP USING A DOUBLE ROW OF STAGGERED STAPLES 4 INCHES BELOW THE FIRST ROW IN A STAGGERED PATTERN.
6. IN HIGH FLOW CHANNEL APPLICATIONS, A STAPLE CHECK SLOT IS RECOMMENDED AT 30 TO 40 FEET INTERVALS. USE A ROW OF STAPLES 4 INCHES BELOW THE FIRST ROW IN A STAGGERED PATTERN.
7. INSTALL CHANNEL LINER TO THE TOP OF THE DEFINED CHANNEL SECTION. TWO OR MORE ROWS OF BLANKETS MAY BE NECESSARY, THESE LINERS MUST BE OVERLAPPED 4 INCHES AND STAPLED.
8. THE CHANNEL LINER SHOULD EXTEND TO THE BASE OF THE CHANNEL AND STAPLED. FOR CHANNELS WITH VERY LITTLE OR NO FLOW, EXTEND A MINIMUM OF 1 FOOT BELOW THE LOW WATER LEVEL AND STAPLE IN PLACE.
9. INSTALLATION SPECIFICATIONS TO BE MODIFIED AS NECESSARY TO SUIT ACTUAL SITE CONDITIONS.

REVISIONS 1 11.04.08 Updated drawing notes

G:\2000Drafting and GIS\CADFiles\Drawings\Typical_Details\20081104\Erosion_Details.dwg 11/5/2008 1:23:31 PM CST

TransCanada
In business to deliver
KEYSTONE XL PROJECT
PREPARED BY:
TROW ENGINEERING CONSULTANTS, INC.
7505 NW Tiffany Springs Pkwy., Suite 400
Northpointe Circle I
Kansas City, MO 64153
Phone: 1–816–801–7063
Fax: 1–816–801–7048
Trow

ORIGINATOR: JOE A. NELSON (NAME) 9/08/08 (DATE)

CHECKED BY: APPROVED BY:

DETAIL 19

FIA # | CHAINAGE: | DISCIPLINE #

TITLE: FLEXIBLE CHANNEL LINER INSTALLATION

SCALE: N.T.S. | DWG No: XL–00–ML–7000–520 | REV: 1

LAST PLOT DATE: Wed, 05 Nov 2008 – 3:36pm

CADD DRAWING: DO NOT MAKE MANUAL REVISIONS PLOTTED SIZE: ANSI A (8.5x11)

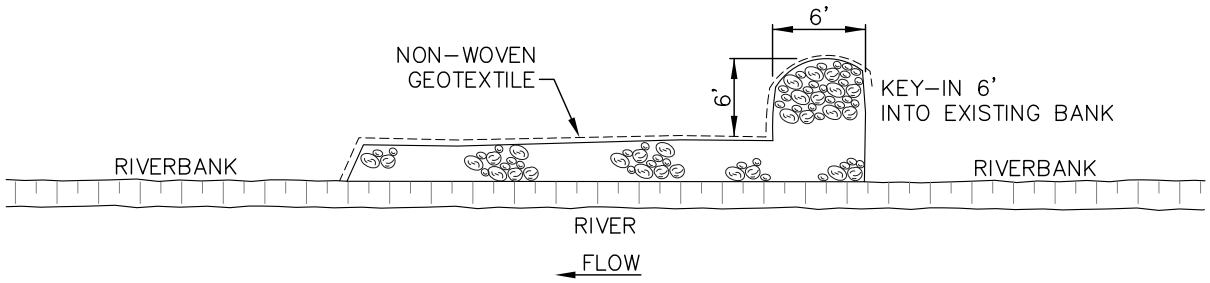

PLAN

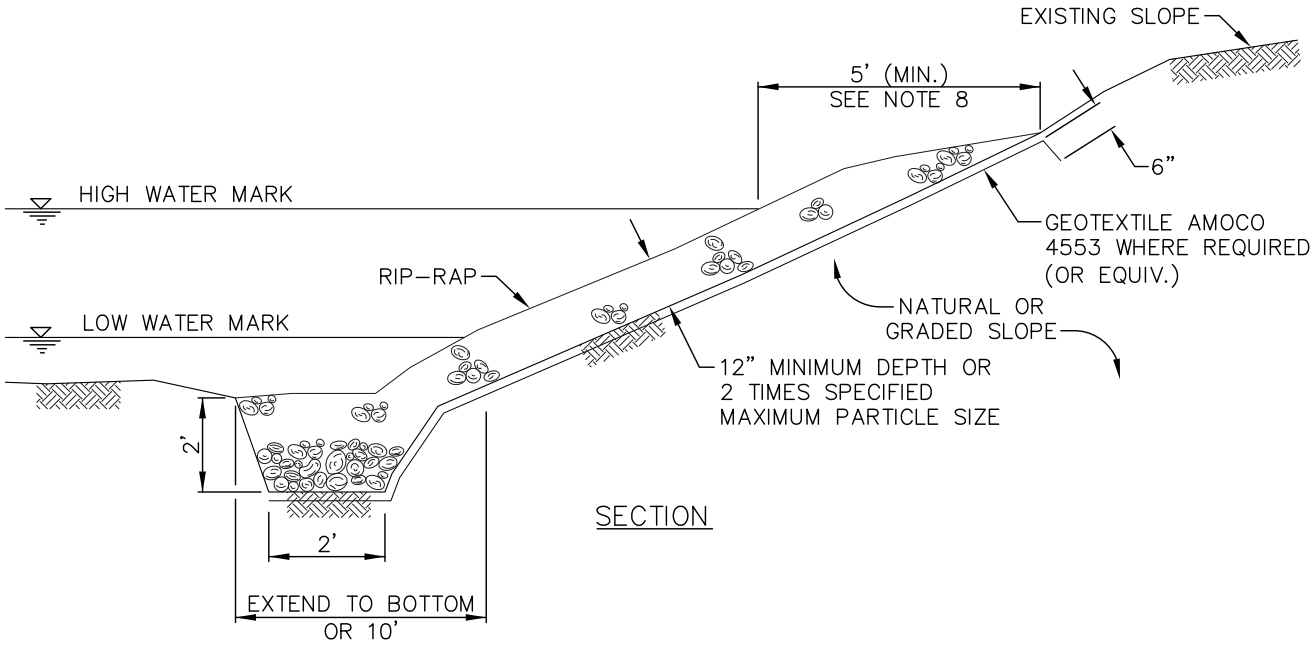

SECTION

NOTES:

1. REMOVE ALL STUMPS, ORGANIC MATERIAL AND PREPARE BANKS TO A STABLE CONFIGURATION TO A MAXIMUM SLOPE OF 2 HORIZONTAL TO 1 VERTICAL.
2. CONSTRUCT TOE TRENCH TO KEY IN BOTTOM OF RIP-RAP PROTECTION.
3. INSTALL FILTER CLOTH (GEOTEXTILE), SUCH AS AMOCO 4553 OR EQUIVALENT, UNDER ROCK WHERE SPECIFIED OR AS DIRECTED BY THE COMPANY. ADJOINING EDGES OF CLOTH SHALL OVERLAP A MINIMUM OF 12".
4. ROCK UTILIZED FOR RIP-RAP SHALL CONSIST OF SOUND, DURABLE ROCK, AND RESISTANT TO WEATHERING. INDIVIDUAL PIECES SHOULD BE ANGULAR, BLOCK SHAPED AND HAVE A MINIMUM SPECIFIC GRAVITY OF 2.2.
5. INSTALL RIP-RAP TO A THICKNESS OF APPROXIMATELY 2 TIMES THE MAXIMUM EQUIVALENT DIAMETER OF THE RIP-RAP. EACH LOAD SHOULD BE WELL GRADED. A WELL GRADED MIXTURE IS COMPOSED 60% (MINIMUM) OF LARGER SIZES WITH 40% OF SMALLER SIZES TO FILL THE VOIDS.
6. SIZE OF RIP-RAP IS DEPENDENT UPON THE PREDICTED FLOW CONDITIONS.
7. KEY IN THE EDGES OF THE RIP-RAP AND FILTER CLOTH TO NATURAL GROUND CONTOURS SO THAT UNDERMINING DOES NOT OCCUR.
8. RIP-RAP IS TO BE INSTALLED TO 2 FEET. ABOVE THE NORMAL HIGH WATER MARK OR 5 FEET ALONG THE SLOPE, WHICHEVER IS LESS.
9. INSTALLATION SPECIFICATIONS TO BE MODIFIED TO SUIT ACTUAL SITE CONDITIONS.

REVISIONS 1 11.04.08 Updated drawing notes

G:\2000Drafting and GIS\CADFiles\Drawings\Typical_Details\20081104\Erosion_Details.dwg 11/5/2008 1:23:31 PM CST

TransCanada
In business to deliver
KEYSTONE XL PROJECT
PREPARED BY:
TROW ENGINEERING CONSULTANTS, INC.
7505 NW Tiffany Springs Pkwy., Suite 400
Northpointe Circle I
Kansas City, MO 64153
Phone: 1-816-801-7063
Fax: 1-816-801-7048
Trow

ORIGINATOR: JOE A. NELSON (NAME) 9/08/08 (DATE)

CHECKED BY: APPROVED BY:

DETAIL 20

FIA # | CHAINAGE: | DISCIPLINE #

TITLE: TYPICAL ROCK RIP-RAP

SCALE: N.T.S. | DWG No: XL-00-ML-7000-521 | REV: 1

LAST PLOT DATE: Wed, 05 Nov 2008 - 3:41pm

CADD DRAWING: DO NOT MAKE MANUAL REVISIONS PLOTTED SIZE: ANSI A (8.5x11)

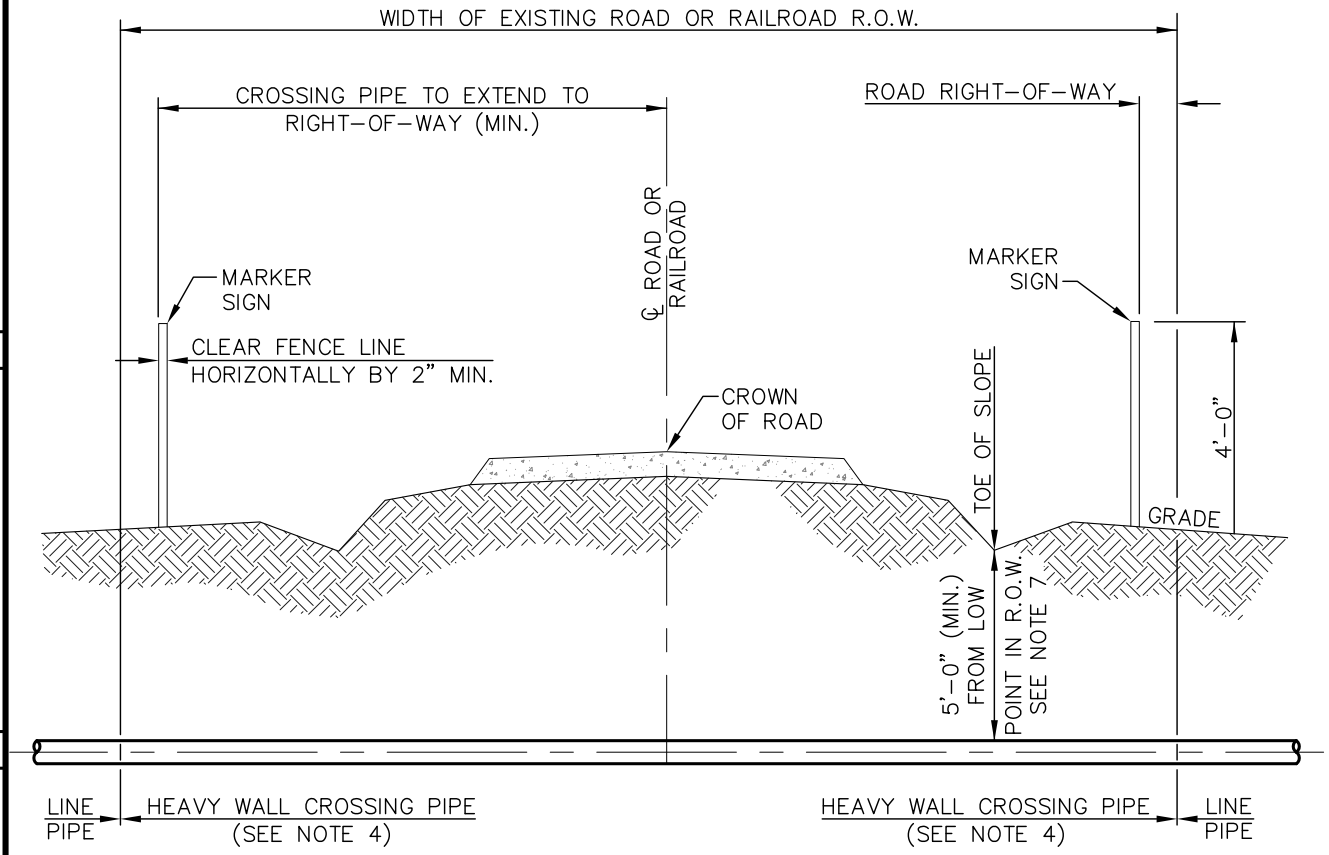

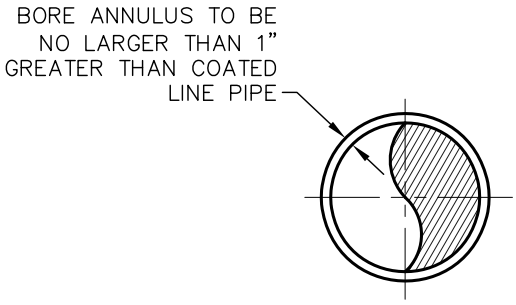

NOTES:

1. CROSSINGS SHALL BE IN ACCORDANCE WITH APPLICABLE PERMIT.
2. ROAD CROSSING PIPE SHALL EXTEND AT MINIMUM TO RIGHT-OF-WAY LINE UNLESS OTHERWISE SPECIFIED.
3. THE TYPE AND MINIMUM REQUIRED LENGTH OF PIPE FOR CROSSINGS OF ROADS SHALL BE AS SPECIFIED ON ALIGNMENT SHEETS.
4. PIPE FOR BORED CROSSINGS TO INCLUDE ABRASION-RESISTANT (ARB) COATING.
5. PIPELINE MARKER AND TEST STATIONS TO BE INSTALLED ON RIGHT-OF-WAY LINE NEXT TO FENCE IF POSSIBLE.
6. THE CROSSING PIPE SHALL BE STRAIGHT WITH NO VERTICAL OR HORIZONTAL BENDS WITHIN ROAD RIGHT-OF-WAY.
7. MINIMUM PIPELINE COVER IN DRAINAGE DITCHES AT PUBLIC ROADS IS 60 INCHES; 36 INCHES IN CONSOLIDATED ROCK.

REVISIONS		
1	REVISED DIMENSION	

G:\2000Drafting and GIS\CADFiles\Drawings\Typical_Details\20081104\Crossing_Details.dwg 11/5/2008 3:17:58 PM CST

TransCanada
In business to deliver
KEYSTONE XL PROJECT
PREPARED BY:
TROW ENGINEERING CONSULTANTS, INC.
7505 NW Tiffany Springs Pkwy., Suite 400
Northpointe Circle I
Kansas City, MO 64153
Phone: 1-816-801-7063
Fax: 1-816-801-7048
Trow

LAST PLOT DATE: Wed, 05 Nov 2008 - 4:52pm

ORIGINATOR: JOE A. NELSON (NAME) 9/08/08 (DATE)

CHECKED BY: APPROVED BY:

DETAIL 21

FIA # | CHAINAGE: | DISCIPLINE #

TITLE: TYPICAL UNCASED ROAD/RAILROAD CROSSING BORE DETAIL

SCALE: N.T.S. | DWG No: XL-00-ML-7000-522 | REV: 1

CADD DRAWING: DO NOT MAKE MANUAL REVISIONS PLOTTED SIZE: ANSI A (8.5x11)

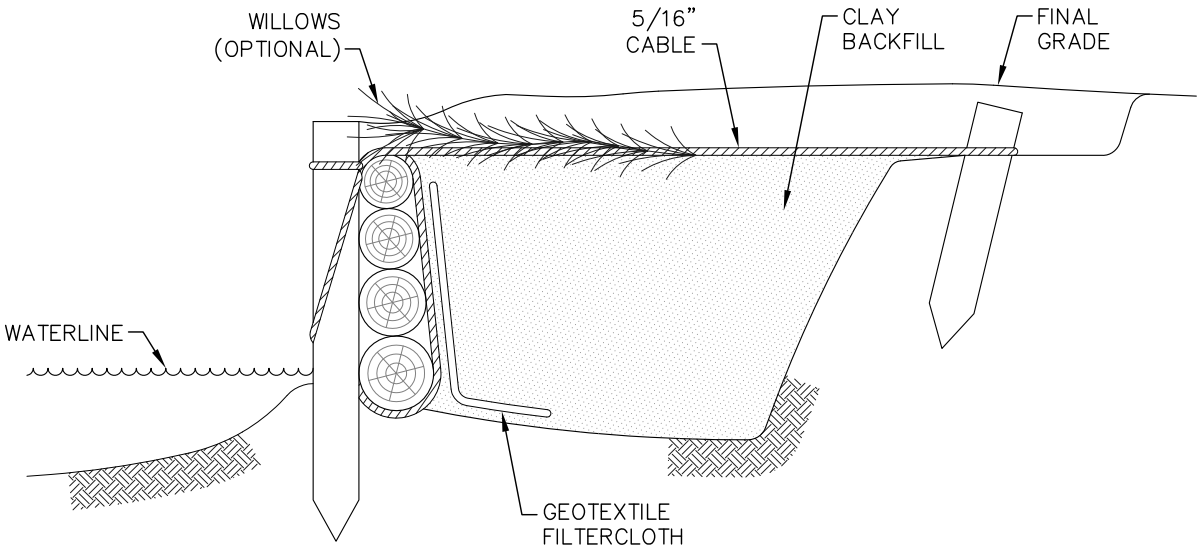

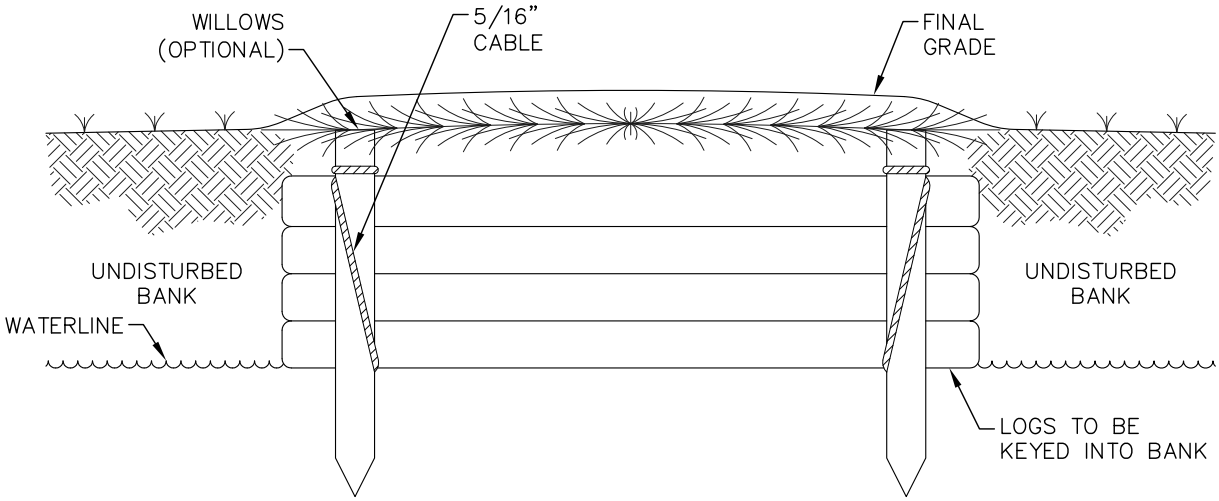

NOTES:

1. LOG WALLS TO BE CONSTRUCTED USING CONIFEROUS MATERIAL.
2. NATURE BACKFILL OR LOOSE GRADE MATERIAL SHOULD BE USED AS FILL MATERIAL.
3. ANCHOR PILINGS OR DEADMAN ANCHORS TO BE USED TO SECURE CABLE IN BANK.
4. NON-WOVEN FILTER CLOTH (NYLEX C34 OR EQUIVALENT) TO BE USED TO LINE LOG WALL.
5. INSTALLATION SPECIFICATIONS TO BE MODIFIED AS NECESSARY TO SUIT ACTUAL SITE CONDITIONS.

REVISIONS 1 11.04.08 Updated drawing notes

G:\2000Drafting and GIS\CADFiles\Drawings\Typical_Details\20081104\Erosion_Details.dwg 11/5/2008 1:23:31 PM CST

TransCanada
In business to deliver
KEYSTONE XL PROJECT
PREPARED BY:
TROW ENGINEERING CONSULTANTS, INC.
7505 NW Tiffany Springs Pkwy., Suite 400
Northpointe Circle I
Kansas City, MO 64153
Phone: 1-816-801-7063
Fax: 1-816-801-7048
Trow

ORIGINATOR: JOE A. NELSON (NAME) 9/08/08 (DATE)

CHECKED BY: APPROVED BY:

DETAIL 23

FIA # | CHAINAGE: | DISCIPLINE #

TITLE: STREAMBANK RECLAMATION – LOGWALL

SCALE: N.T.S. | DWG No: XL-00-ML-7000-524 | REV: 1

LAST PLOT DATE: Wed, 05 Nov 2008 - 3:57pm

CADD DRAWING: DO NOT MAKE MANUAL REVISIONS PLOTTED SIZE: ANSI A (8.5x11)

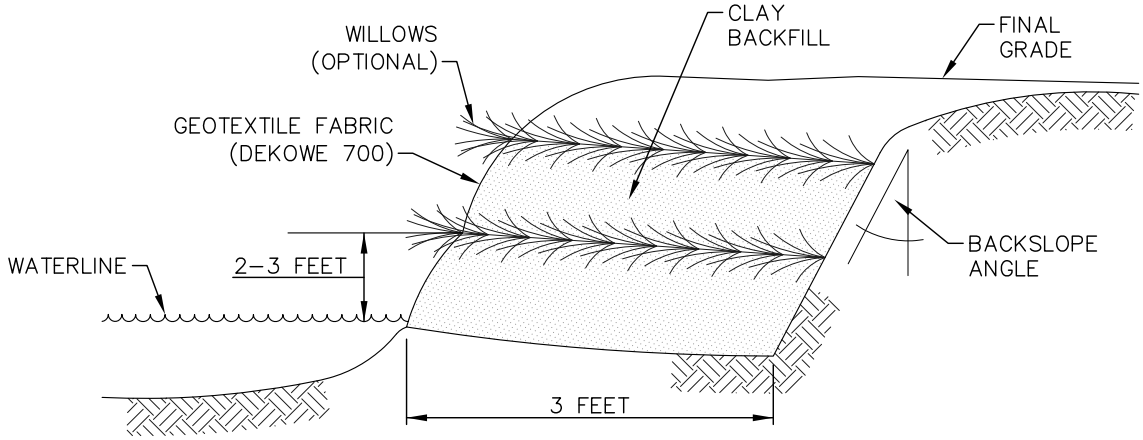

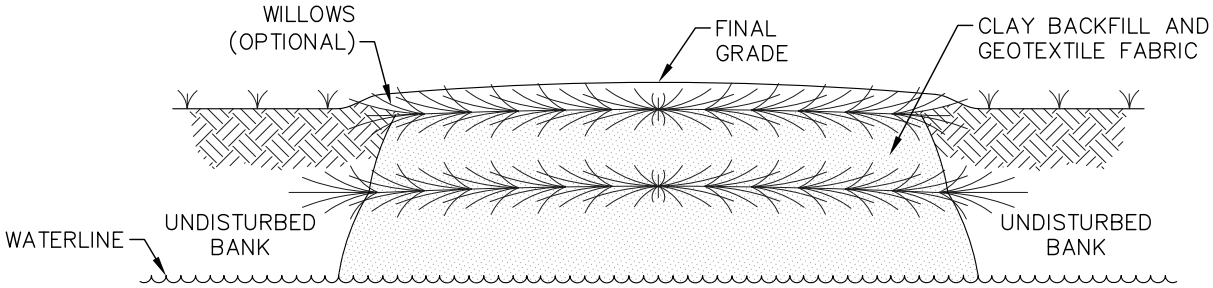

NOTES:

1. NATURE BACKFILL OR LOOSE GRADE MATERIAL SHOULD BE USED TO MINIMIZE AIR SPACES. THIS ALLOWS PROPER SOIL FABRIC CONTACT, WHICH MINIMIZES STEELING AND SCOURING DURING RUNOFF AND ENSURES SURVIVAL OF THE WILLOW CUTTINGS.
2. PLYWOOD FORMS (8'x2') MAY BE REQUIRED TO HELP RECONSTRUCT STEEP OR VERTICAL BANKS.
3. GRID LAYERS SHOULD NOT EXCEED 3 FEET IN HEIGHT WITH A MINIMUM OF 3 FEET SET IN BANK.
4. WILLOWS SHOULD BE HARVESTED AS CLOSE TO INSTALLATION AS POSSIBLE, PREFERABLY THE PREVIOUS DAY BUT NO MORE THAN 2 DAYS EARLY.
5. WILLOWS SHOULD BE 0.5 TO 1 INCH IN DIAMETER AND 2 TO 3 FEET LONG WITH NO MORE THAN 10 INCHES LEFT EXPOSED.
6. PLANTING RATE SHOULD BE APPROXIMATELY 1 STEM PER 6 INCHES.
7. INSTALLATION TO BE MODIFIED AS NECESSARY TO SUIT ACTUAL SITE CONDITIONS.

REVISIONS 1 11.04.08 Updated drawing notes

G:\2000Drafting and GIS\CADFiles\Drawings\Typical_Details\20081104\Erosion_Details.dwg 11/5/2008 1:23:31 PM CST

TransCanada
In business to deliver
KEYSTONE XL PROJECT

PREPARED BY:
TROW ENGINEERING CONSULTANTS, INC.
7505 NW Tiffany Springs Pkwy., Suite 400
Northpointe Circle I
Kansas City, MO 64153
Phone: 1–816–801–7063
Fax: 1–816–801–7048
Trow

ORIGINATOR: JOE A. NELSON (NAME) 9/08/08 (DATE)

CHECKED BY: APPROVED BY:

DETAIL 24

FIA #	CHAINAGE:	DISCIPLINE #

TITLE: STREAMBANK RECLAMATION – VEGETATED GEOTEXTILE INSTALLATION

SCALE	DWG No	REV
N.T.S.	XL–00–ML–7000–525	1

LAST PLOT DATE: Wed, 05 Nov 2008 – 3:58pm

CADD DRAWING: DO NOT MAKE MANUAL REVISIONS PLOTTED SIZE: ANSI A (8.5x11)

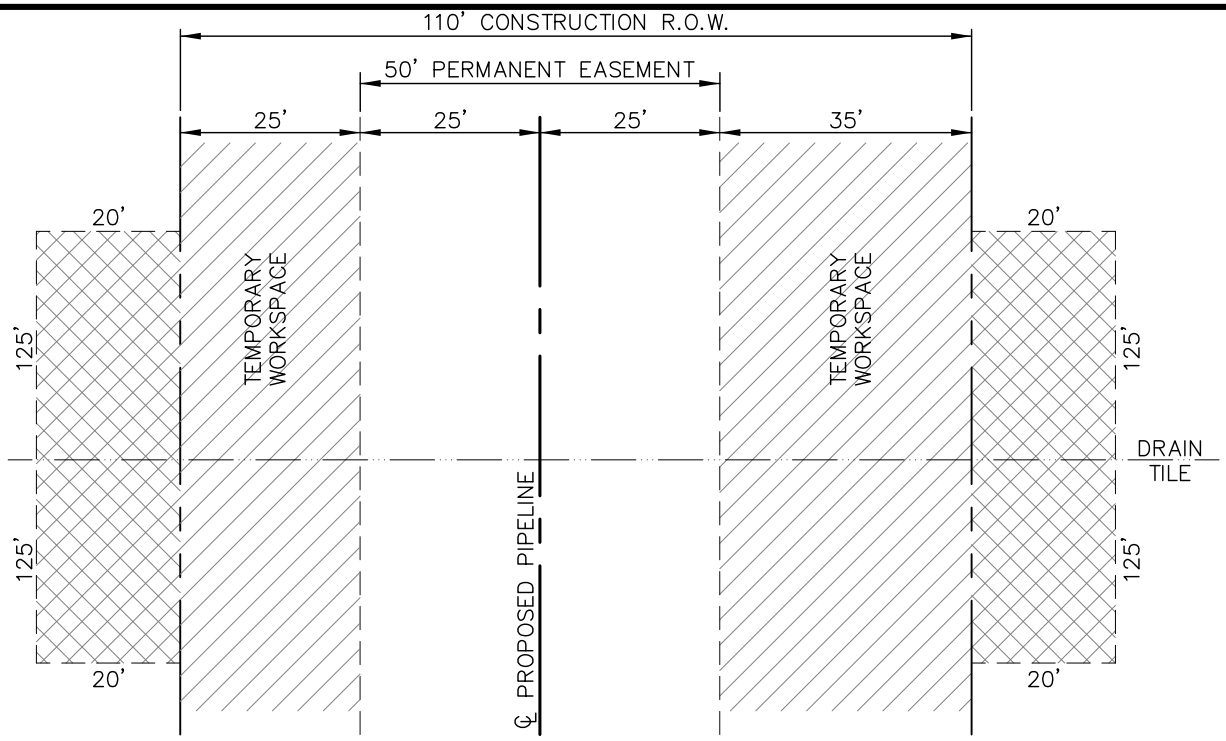

PLAN VIEW

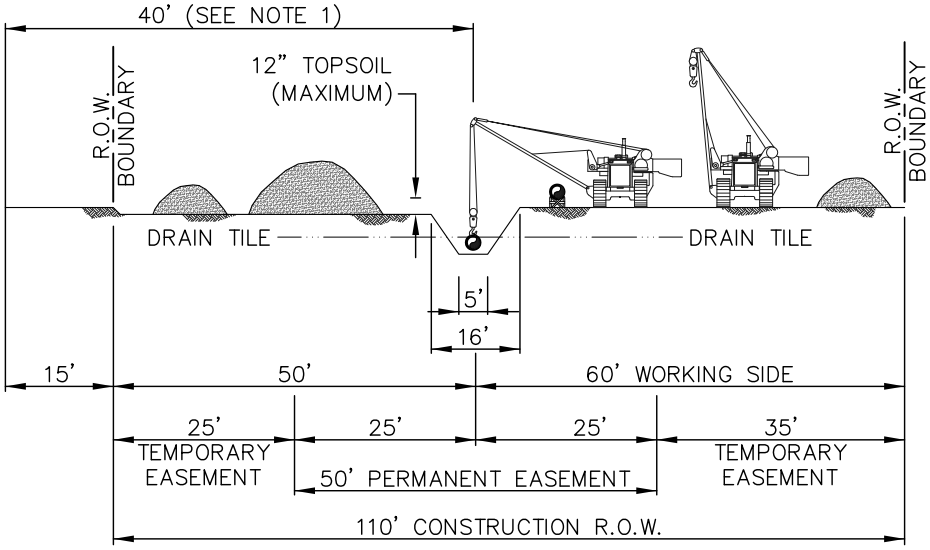

ELEVATION

NOTES:

1. THE OFFSET FROM A FOREIGN PIPELINE, WHERE APPLICABLE, WILL BE 40' FOR MOST LOCATIONS, BUT MAY BE INCREASED OR DECREASED DEPENDING ON THE SITE SPECIFIC CONSTRUCTION REQUIREMENTS.
2. THE MINIMUM CLEARANCE BETWEEN THE TOP OF PIPE AND THE BOTTOM OF DRAIN TILE WILL BE 12 INCHES.
3. INSTALLATION SPECIFICATIONS TO BE MODIFIED AS NECESSARY TO SUIT ACTUAL SITE CONDITIONS.

REVISIONS | 1 | REVISED NOTE 3; DELETED DIMENSION

G:\2000Drafting and GIS\CADFiles\Drawings\Typical_Details\20081104\Crossing_Details.dwg 11/6/2008 10:53:16 AM CST

TransCanada
In business to deliver
KEYSTONE XL PROJECT
PREPARED BY:
TROW ENGINEERING CONSULTANTS, INC.
7505 NW Tiffany Springs Pkwy., Suite 400
Northpointe Circle I
Kansas City, MO 64153
Phone: 1-816-801-7063
Fax: 1-816-801-7048
Trow

ORIGINATOR: JOE A. NELSON (NAME) 9/08/08 (DATE)

CHECKED BY: | APPROVED BY:

DETAIL 25

FIA # | CHAINAGE: | DISCIPLINE #

TITLE: TYPICAL R.O.W. LAYOUT/SOIL HANDLING
110' CONSTRUCTION R.O.W. 50' EASEMENT
DRAIN TILE CROSSING

SCALE: N.T.S. | DWG No: XL-00-ML-7000-526 | REV: 1

LAST PLOT DATE: Thu, 06 Nov 2008 - 11:14am

CADD DRAWING: DO NOT MAKE MANUAL REVISIONS PLOTTED SIZE: ANSI A (8.5x11)

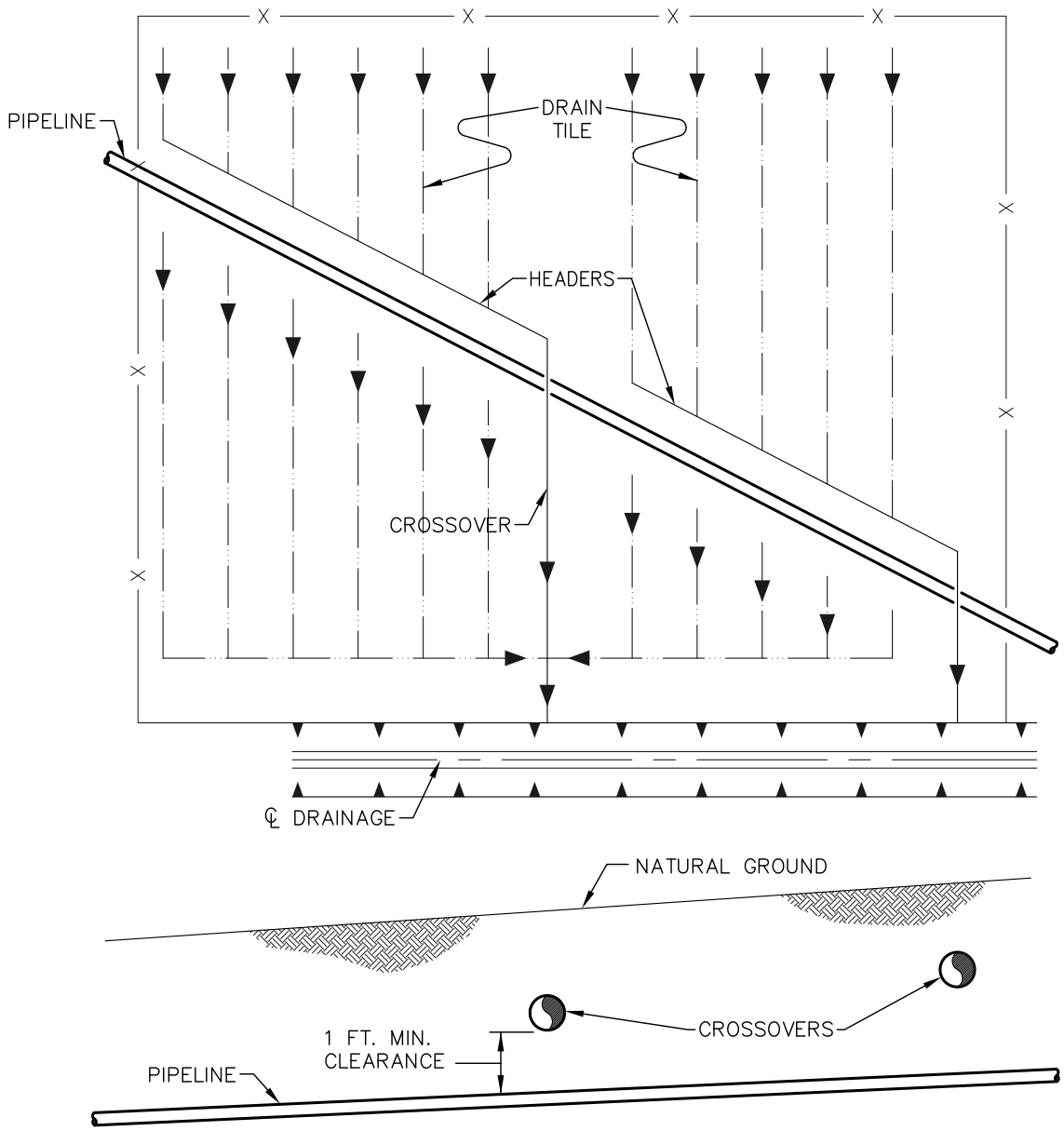

PROFILE

REVISIONS		
1	ADDED DIMENSION	

G:\2000Drafting and GIS\CADFiles\Drawings\Typical_Details\20081104\Crossing_Details.dwg 11/5/2008 3:17:58 PM CST

TransCanada
In business to deliver
KEYSTONE XL PROJECT
PREPARED BY:
TROW ENGINEERING CONSULTANTS, INC.
7505 NW Tiffany Springs Pkwy., Suite 400
Northpointe Circle I
Kansas City, MO 64153
Phone: 1-816-801-7063
Fax: 1-816-801-7048
Trow

ORIGINATOR: JOE A. NELSON (NAME) 9/08/08 (DATE)

CHECKED BY: APPROVED BY:

DETAIL 26

FIA # | CHAINAGE: | DISCIPLINE #

TITLE: HEADER/MAIN CROSSOVERS OF PIPELINE

SCALE: N.T.S. | DWG No: XL-00-ML-7000-527 | REV: 1

LAST PLOT DATE: Wed, 05 Nov 2008 - 6:17pm

CADD DRAWING: DO NOT MAKE MANUAL REVISIONS PLOTTED SIZE: ANSI A (8.5x11)

RELOCATE/REPLACE DRAINAGE HEADER/MAIN

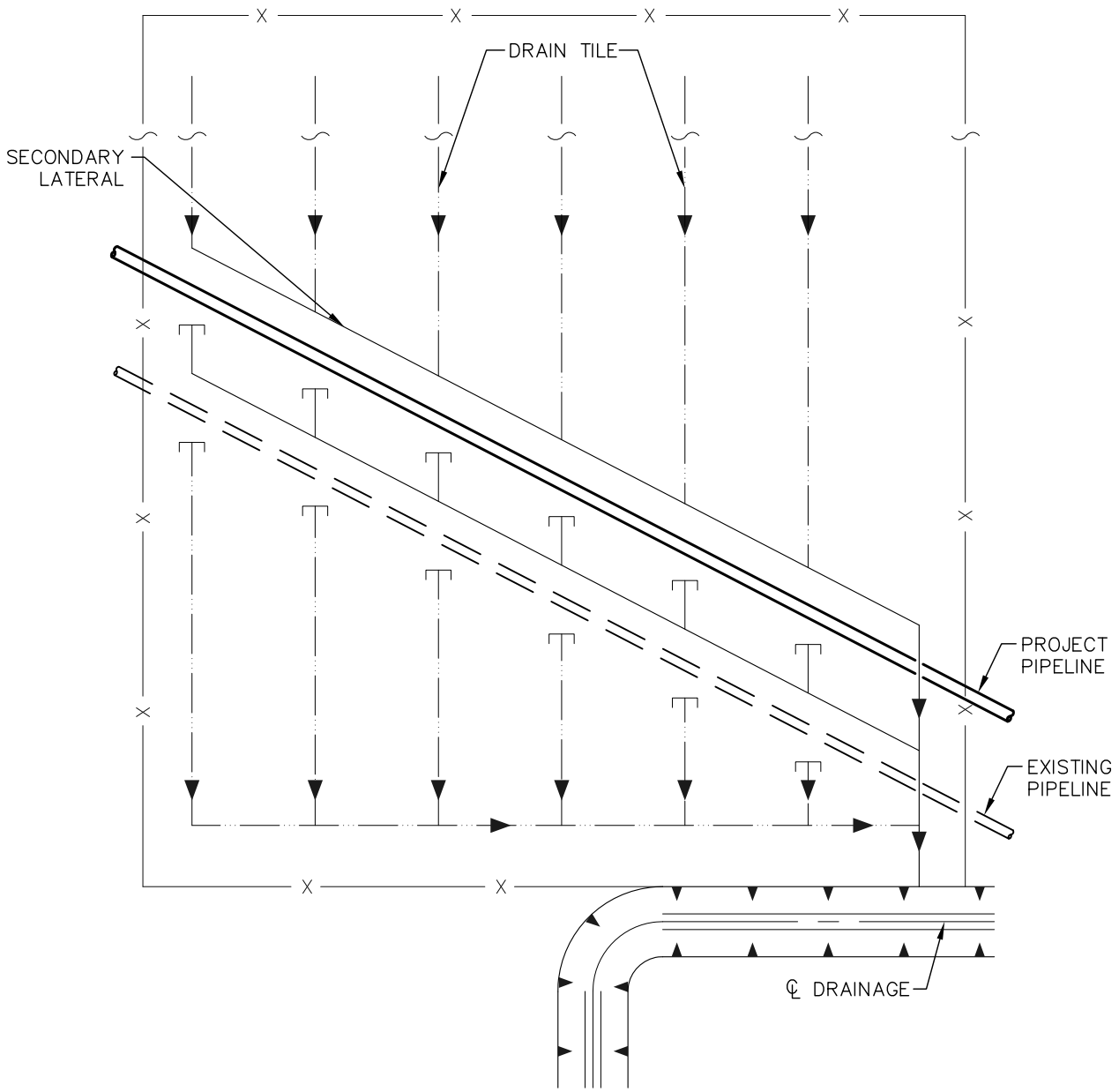

G:\2000Drafting and GIS\CADFiles\Drawings\Typical_Details\20081104\Crossing_Details.dwg 11/6/2008 10:53:16 AM CST

REVISIONS		
1	REVISED LABELS	

TransCanada
In business to deliver

KEYSTONE XL PROJECT

PREPARED BY:
TROW ENGINEERING CONSULTANTS, INC.
7505 NW Tiffany Springs Pkwy., Suite 400
Northpointe Circle I
Kansas City, MO 64153
Phone: 1-816-801-7063
Fax: 1-816-801-7048
Trow

ORIGINATOR: JOE A. NELSON (NAME) 9/08/08 (DATE)

CHECKED BY:

APPROVED BY:

DETAIL 27

FIA #

CHAINAGE:

DISCIPLINE #

TITLE: HEADER/MAIN CROSSOVERS OF PIPELINE

SCALE: N.T.S.

DWG No: XL-00-ML-7000-528

REV: 1

LAST PLOT DATE: Thu, 06 Nov 2008 - 10:53am

CADD DRAWING: DO NOT MAKE MANUAL REVISIONS

PLOTTED SIZE: ANSI A (8.5x11)

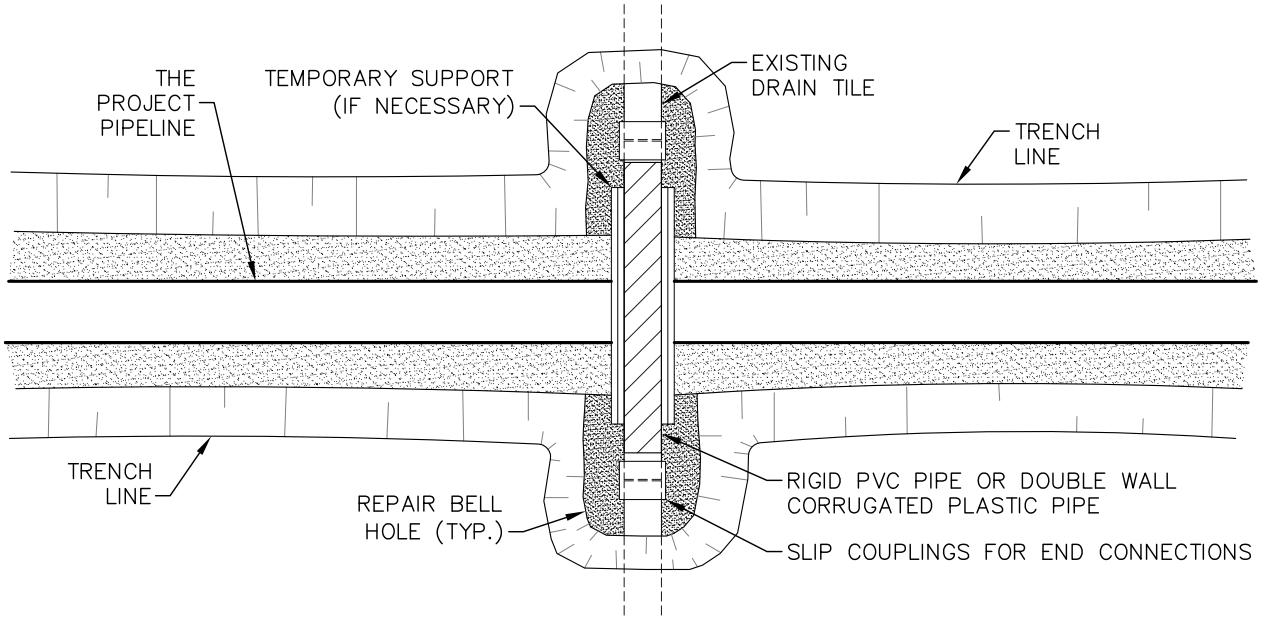

PLAN

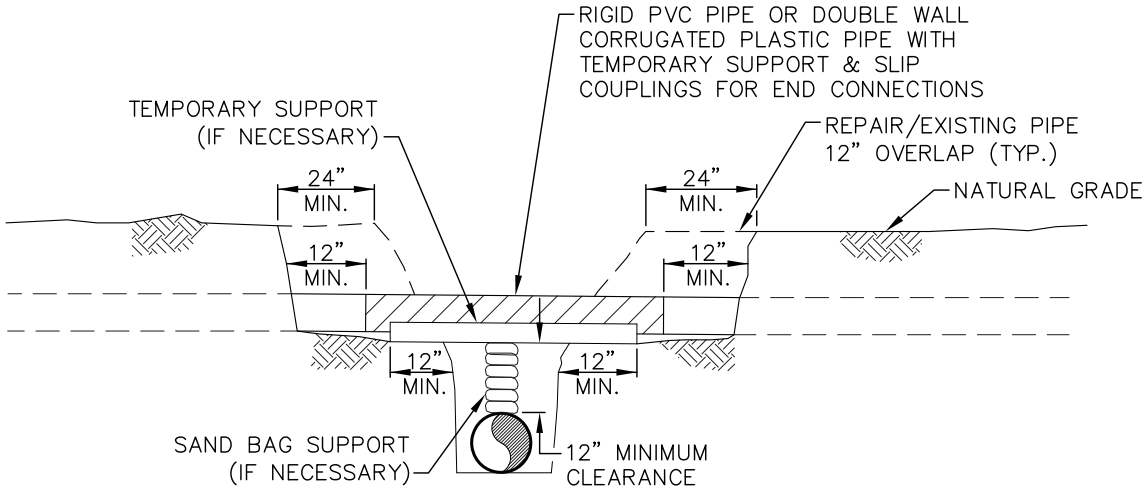

PROFILE

NOTES:

1. IMMEDIATELY REPAIR TILE IF WATER IS FLOWING THROUGH TILE AT TIME OF TRENCHING.
2. SCREEN ALL EXPOSED ENDS OF TILE LINES.

REVISIONS | 1 | 11.04.08 Updated drawing notes

G:\2000Drafting and GIS\CADFiles\Drawings\Typical_Details\20081104\Erosion_Details.dwg 11/5/2008 1:23:31 PM CST

TransCanada
In business to deliver
KEYSTONE XL PROJECT

PREPARED BY:
TROW ENGINEERING CONSULTANTS, INC.
7505 NW Tiffany Springs Pkwy., Suite 400
Northpointe Circle I
Kansas City, MO 64153
Phone: 1-816-801-7063
Fax: 1-816-801-7048
Trow

ORIGINATOR: JOE A. NELSON (NAME) 9/08/08 (DATE)
CHECKED BY:
APPROVED BY:

DETAIL 28

FIA #	CHAINAGE:	DISCIPLINE #

TITLE: DRAINAGE AND IRRIGATION TEMPORARY DRAIN TILE REPAIR

SCALE	DWG No	REV
N.T.S.	XL-00-ML-7000-529	1

LAST PLOT DATE: Wed, 05 Nov 2008 - 4:05pm

CADD DRAWING: DO NOT MAKE MANUAL REVISIONS PLOTTED SIZE: ANSI A (8.5x11)

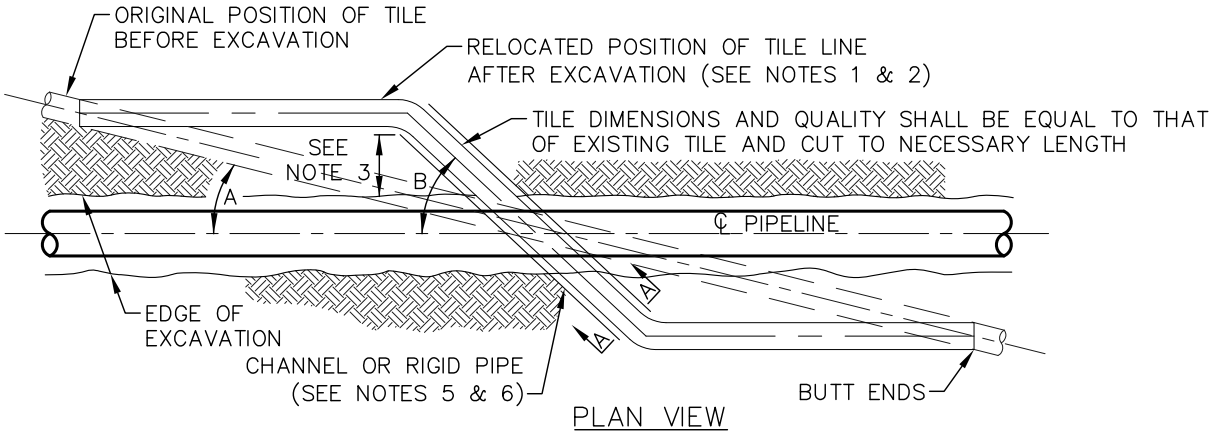

PLAN VIEW

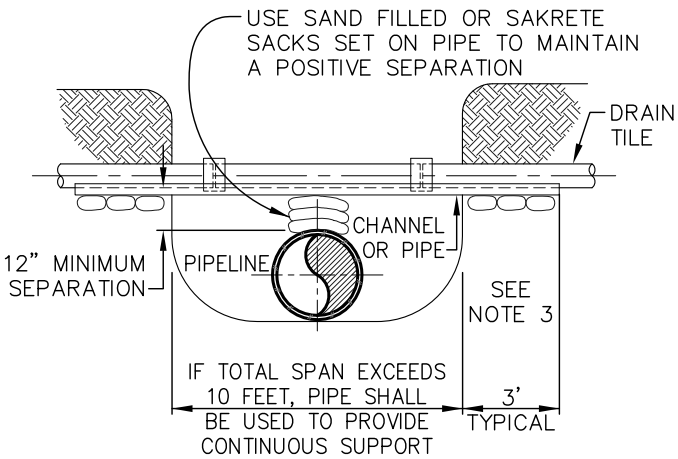

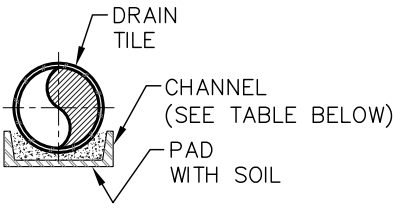

SECTION "A–A" CHANNEL (SPANS < 10 FEET)

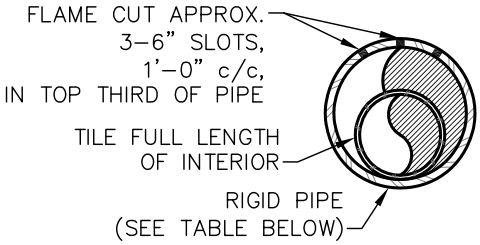

END VIEWS

SECTION "A–A" RIGID PIPE (SPANS > 10 FEET)

NOTES:

1. TILE REPAIR SHALL MAINTAIN ORIGINAL ALIGNMENT AND GRADIENT WHEN ANGLE "A", BETWEEN PIPELINE AND ORIGINAL TILE, IS MORE THAN 20 FEET UNLESS OTHERWISE DIRECTED BY THE PROJECT REPRESENTATIVE.
2. WHEN ANGLE "A" IS LESS THAN 20 FEET, UNLESS OTHERWISE DIRECTED BY COMPANY, ANGLE "B" SHALL BE 45° FOR USUAL WIDTHS OF TRENCH. FOR EXTRA WIDTHS, IT MAY BE GREATER AS DIRECTED BY THE PROJECT REPRESENTATIVE.
3. 3 FOOT MINIMUM LENGTH OF CHANNEL OR RIGID PIPE SHALL BE SUPPORTED BY UNDISTURBED SOIL, OR IF CROSSING IS NOT AT RIGHT ANGLES TO GAS PIPELINE, EQUIVALENT LENGTH PERPENDICULAR TO TRENCH. SHIM WITH SAKRETE, SAND BAGS OR CONCRETE BLOCKS TO UNDISTURBED SOIL FOR SUPPORT AND DRAINAGE GRADIENT MAINTENANCE (TYPICAL BOTH SIDES).
4. DRAINAGE TILE SHALL BE REPLACED SO THAT ITS FORMER GRADIENT AND ALIGNMENT ARE RESTORED.
5. DIAMETER OF RIGID PIPE SHALL BE OF ADEQUATE SIZE TO ALLOW FOR THE INSTALLATION OF THE TILE FOR THE FULL LENGTH OF THE RIGID PIPE.
6. OTHER METHODS OF SUPPORTING DRAIN TILE MAY BE USED IF THE ALTERNATE PROPOSED IS EQUIVALENT IN STRENGTH TO THE CHANNEL/PIPE SECTIONS SHOWN AND IF APPROVED BY THE PROJECT REPRESENTATIVE IN ADVANCE. SITE SPECIFIC ALTERNATE SUPPORT SYSTEM TO BE DEVELOPED BY THE PROJECT REPRESENTATIVE AND FURNISHED TO CONTRACTOR FOR SPANS IN EXCESS OF 20 FEET, TILE GREATER THAN 10 INCHES DIAMETER, AND FOR HEADER SYSTEMS.
7. ALL MATERIAL TO BE FURNISHED BY CONTRACTOR.
8. PRIOR TO REPAIRING TILE, CONTRACTOR SHALL PROBE INTO THE EXISTING TILE TO THE FULL WIDTH OF THE RIGHT–OF–WAY TO DETERMINE IF ADDITIONAL DAMAGE HAS OCCURRED. ALL DAMAGED/DISTURBED TILE SHALL BE REPAIRED AS NEAR AS PRACTICABLE TO ITS ORIGINAL OR BETTER CONDITION.
9. "NIGHT CAP" OPEN ENDS OF PIPE AND/OR DRAIN TILES IF REPAIRS ARE NOT COMPLETED BY END OF WORK DAY.

MINIMUM SUPPORT TABLE

TILE SIZE	CHANNEL SIZE	PIPE SIZE
3"	4" @ 5.4 #/FT.	4" STD. WT
4"–5"	5" @ 6.7 #/FT.	6" STD. WT
6"–9"	7" @ 9.8 #/FT.	8"–10" STD. WT
10"	10" @ 15.3 #/FT.	12" STD. WT

REVISIONS 1 11.04.08 Updated drawing notes

G:\2000Drafting and GIS\CADFiles\Drawings\Typical_Details\20081104\Erosion_Details.dwg 11/5/2008 1:23:31 PM CST

TransCanada
In business to deliver
KEYSTONE XL PROJECT

PREPARED BY:
TROW ENGINEERING CONSULTANTS, INC.
7505 NW Tiffany Springs Pkwy., Suite 400
Northpointe Circle I
Kansas City, MO 64153
Phone: 1–816–801–7063
Fax: 1–816–801–7048
Trow

ORIGINATOR: JOE A. NELSON (NAME) 9/08/08 (DATE)

CHECKED BY: APPROVED BY:

DETAIL 29

FIA # | CHAINAGE: | DISCIPLINE #

TITLE: DRAINAGE AND IRRIGATION PERMANENT DRAIN TILE REPAIR

SCALE N.T.S. | DWG No XL–00–ML–7000–530 | REV 1

LAST PLOT DATE: Wed, 05 Nov 2008 – 4:03pm

CADD DRAWING: DO NOT MAKE MANUAL REVISIONS PLOTTED SIZE: ANSI A (8.5x11)

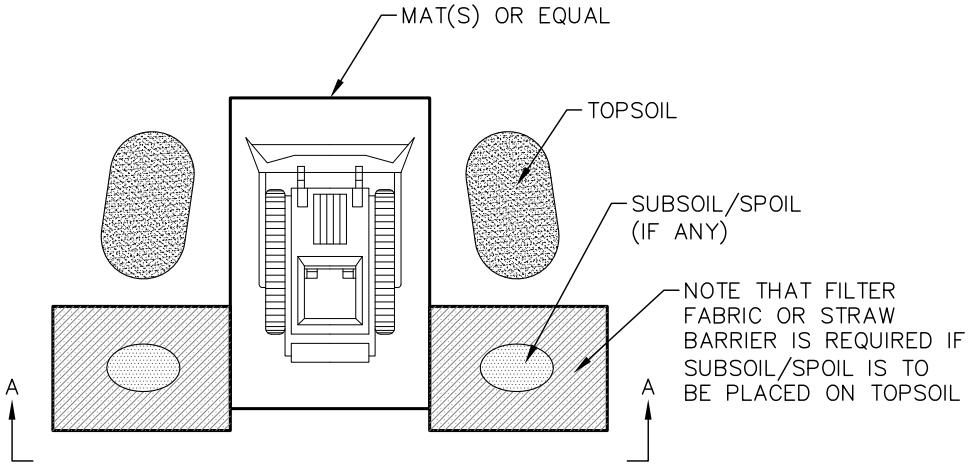

PLAN

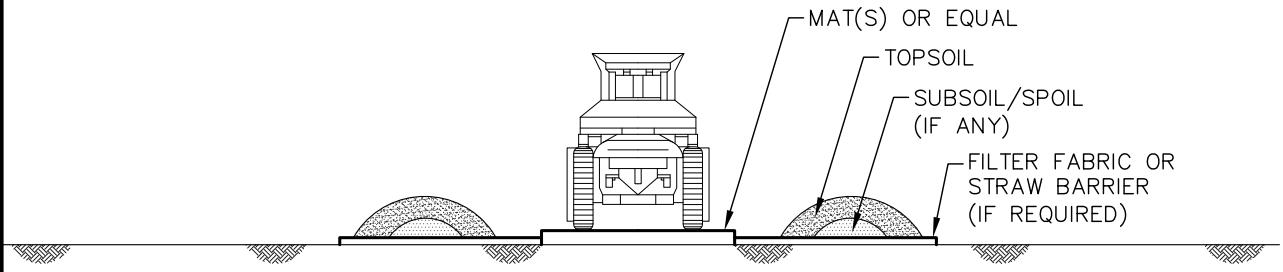

SECTION A–A

NOTES:

1. ALL EQUIPMENT WILL BE REQUIRED TO BE CLEANED AT EQUIPMENT CLEANING STATIONS LOCATED AS SHOWN ON THE CONSTRUCTION DRAWINGS OR AS DIRECTED BY THE ENVIRONMENTAL INSPECTOR.
2. STOCKPILE TOPSOIL/SUBSOIL AS SHOWN OR IN ANY CONFIGURATION APPROVED BY THE ENVIRONMENTAL INSPECTOR.
3. SHOVELS OR OTHER HAND TOOLS AND/OR COMPRESSED AIR WILL BE USED TO REMOVE AS MUCH SOIL AS PRACTICABLE FROM TRACKED EQUIPMENT. EFFORT WILL BE FOCUSED ON TRACKS AND BLADES.
4. IF CONDITIONS ARE MUDDY, WHEELED EQUIPMENT WILL ALSO BE CLEANED USING HAND TOOLS TO REMOVE EXCESS SOIL FROM TIRES AND WHEEL WELLS.
5. CLEANING WILL BE CONDUCTED ON CONSTRUCTION MATS OR OTHER RAISED SURFACE TO MINIMIZE REATTACHMENT OF SOIL THAT HAS BEEN PREVIOUSLY REMOVED.
6. MATS WILL BE CLEANED BETWEEN EACH PIECE OF EQUIPMENT.
7. SOIL COLLECTED DURING THE CLEANING PROCESS WILL BE STOCKPILED AT A CONVENIENT LOCATION NEAR THE CLEANING STATION AND DISPOSED OF IN AN ACCEPTABLE LAND FILL.
8. IF THE SOIL HAS A SIGNIFICANT COMPONENT OF SUBSOIL, IT WILL BE PLACED OVER THE BACKFILLED TRENCH OR IN THE ADJACENT SPOIL STORAGE AREA, AND SUBSEQUENTLY COVERED WITH TOPSOIL. IF THE LAND OWNER DOES NOT APPROVE OF ON–SITE DISPOSAL, THE SOIL WILL BE TAKEN TO AN APPROVED DISPOSAL SITE.
10. SOILS CONTAMINATED WITH OIL OR GREASE WILL BE REMOVED AND DISPOSED OF IN ACCORDANCE WITH THE PROJECT SPCCC PLAN.

G:\2000Drafting and GIS\CADFiles\Drawings\Typical_Details\20081104\Pipe_and_Test_Station_Details.dwg 11/5/2008 2:25:30 PM CST

REVISIONS | 1 | RENUMBERED DETAIL

TransCanada
In business to deliver
KEYSTONE XL PROJECT
PREPARED BY:
TROW ENGINEERING CONSULTANTS, INC.
7505 NW Tiffany Springs Pkwy., Suite 400
Northpointe Circle I
Kansas City, MO 64153
Phone: 1–816–801–7063
Fax: 1–816–801–7048
Trow

ORIGINATOR: JOE A. NELSON (NAME) 9/08/08 (DATE)

CHECKED BY: | APPROVED BY:

DETAIL 30

FIA #	CHAINAGE:	DISCIPLINE #

TITLE: EQUIPMENT CLEANING STATION DETAIL

SCALE	DWG No	REV
N.T.S.	XL–00–ML–7000–546	1

LAST PLOT DATE: Wed, 05 Nov 2008 – 2:47pm

CADD DRAWING: DO NOT MAKE MANUAL REVISIONS PLOTTED SIZE: ANSI A (8.5x11)

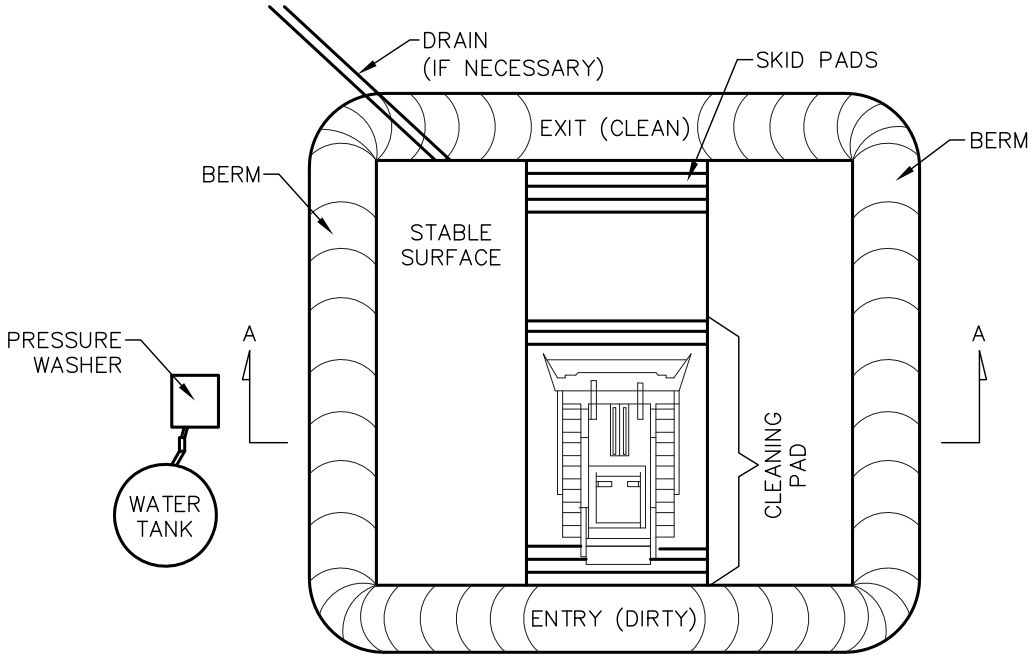

PLAN

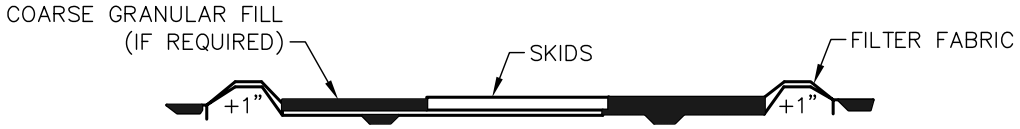

SECTION A–A

WASH STATION NOTES:

1. ALL EQUIPMENT AND VEHICLES ARE REQUIRED TO BE CLEANED AT EACH WASH STATION LOCATIONS SHOWN ON THE CONSTRUCTION DRAWINGS OR AS DIRECTED BY THE ENVIRONMENTAL INSPECTOR. WASH STATIONS WILL BE CONSTRUCTED BY THE CONTRACTOR. WASHINGS WILL BE CARRIED OUT UNDER THE SUPERVISION AND TO THE SATISFACTION OF THE ENVIRONMENTAL INSPECTOR.
2. WASH WATER USED FOR CLEANING WILL NOT BE ALLOWED TO ENTER ANY WATERBODY, WETLAND OR IRRIGATION CANAL/DITCH. ANY SOILS CONTAMINATED BY PETROLEUM–BASED OR OTHER UNDESIRABLE MATERIALS FROM WASH STATIONS WILL BE REMOVED.
3. THE SIZE OF STATION WILL BE ADEQUATE TO ACCOMMODATE THE MAXIMUM SIZE OF EQUIPMENT EXPECTED.
4. EQUIPMENT WILL CONSISTENTLY ENTER THE "DIRTY END" AND EXIT THE "CLEAN END".
5. STABLE DRAINAGE FROM THE SITE WILL BE PROVIDED (IF NECESSARY). NO DISCHARGE TO STREAMS OR WETLANDS WILL BE ALLOWED.
6. WASH STATIONS WILL BE EQUIPPED WITH SKID PADS OR WASH RACKS TO PREVENT SOIL FROM BEING CARRIED ON TRACKS OR TIRES AS EQUIPMENT AND VEHICLES EXIT THE WASH STATION. SKIDS ARE TO BE CLEANED EACH TIME A PIECE OF EQUIPMENT IS CLEANED.
7. GRAVEL FILL (IF REQUIRED) AND FILTER FABRIC WILL BE REMOVED AND DISPOSED OF IN AN ACCEPTABLE LAND FILL.
8. THE DEPRESSION WILL BE BACKFILLED WITH BERMED MATERIAL.
9. CLEANING SITES WILL BE MONITORED DURING THE POST CONSTRUCTION MONITORING PROGRAM AND WEEDS WILL BE CONTROLLED PER THE NOXIOUS WEED MANAGEMENT PLAN.

REVISIONS | 1 | RENUMBERED DETAIL

G:\2000Drafting and GIS\CADFiles\Drawings\Typical_Details\20081104\Pipe_and_Test_Station_Details.dwg 11/5/2008 2:25:30 PM CST

TransCanada
In business to deliver
KEYSTONE XL PROJECT
PREPARED BY:
TROW ENGINEERING CONSULTANTS, INC.
7505 NW Tiffany Springs Pkwy., Suite 400
Northpointe Circle I
Kansas City, MO 64153
Phone: 1–816–801–7063
Fax: 1–816–801–7048
Trow

ORIGINATOR: JOE A. NELSON (NAME) 9/08/08 (DATE)

CHECKED BY: | APPROVED BY:

DETAIL 31

FIA # | CHAINAGE: | DISCIPLINE #

TITLE: EQUIPMENT WASH STATION DETAIL

SCALE: N.T.S. | DWG No: XL–00–ML–7000–547 | REV: 1

LAST PLOT DATE: Wed, 05 Nov 2008 – 2:48pm

CADD DRAWING: DO NOT MAKE MANUAL REVISIONS PLOTTED SIZE: ANSI A (8.5x11)

Appendix J –

Oil and Gas Wells within 1320 Feet From ROW

Appendix J - Table 3.3-6 Oil and Gas Wells within 1,320 Feet of the Proposed ROW

Mile-post	Distance (m)	API Number	Longitude	Latitude	Operator	Well Name	Status	Field	County	Location (S-T-R)	QQ	TOTAL DEPTH (Feet)
Steele City Segment												
299.8	37 East	40 063 05033	-103.750972	45.760400	SHELL OIL COMPANY	SHELL CARTER 1 CLARKSON HANSEN	P&A[1]	WC[6]	HARDING	28-21N-3E	NENE	9050
292.7	49 West	40 063 20046	-103.874466	45.811318	ARTHUR L SCHLAIKJER JR	SCHLAIKJER 1 PAINTER	P&A	WC	HARDING	4-21N-2E	NESE	4679
299.8	46 East	40 063 20085	-103.750969	45.760500	AMAX PETROLEUM CORPORATION	AMAX 2-28 HANSEN	P&A	BUFFALO	HARDING	28-21N-3E	NENE	8615
303.1	292 East	40 063 20193	-103.694139	45.735153	CONTINENTAL RESOURCES INC	KOCH 34-36 STATE WBRRU	RE[2]	BUFFALO	HARDING	36-21N-3E	SWSE	8368
302.4	31West	40 063 20203	-103.704626	45.742184	CONTINENTAL RESOURCES INC	KOCH 12-36 STATE WBRRU	TA[3]	BUFFALO	HARDING	36-21N-3E	SWNW	8406
303.8	377 East	40 063 20217	-103.686839	45.727780	CONTINENTAL RESOURCES INC	KIRKWOOD 12-6 FEDERAL WBRRU	RE	BUFFALO	HARDING	6-20N-4E	SWNW	8494
300.7	107 East	40 063 20236	-103.735708	45.753534	CITATION OIL AND GAS CORP	MOSBACHER PRUET 27-1 CLARKSON	P[4]	BUFFALO	HARDING	27-21N-3E	NWSE	8520
301.2	267 East	40 063 20246	-103.725258	45.753077	CITATION OIL AND GAS CORP	MOSBACHER 26-1 CLARKSON WBBRRU	INJ[5]	BUFFALO	HARDING	26-21N-3E	NWSW	8530
300.3	325 East	40 063 20262	-103.740798	45.758402	CITATION OIL AND GAS CORP	APACHE 27-2 CLARKSON	P	BUFFALO	HARDING	27-21N-3E	SENW	8495
304.5	236 East	40 063 20429	-103.684296	45.716033	CONTINENTAL RESOURCES INC	SCI 11-7 TRAVERS WBRRU	R	BUFFALO	HARDING	7-20N-4E	NWNW	8450
303.4	83 West	40 063 20478	-103.694984	45.729346	CONTINENTAL RESOURCES INC	KOCH 32-1 SMOLNIKER WBRRU	INJ	BUFFALO	HARDING	1-20N-3E	SWNE	8350
Gulf Coast Segment												
0.98	373 South-west	08121959	-96.75040	35.92862	Foster Drlg. Co.	DUNGAN	N/A	N/A	Lincoln	17 N-5 E-22	SESESE	3538
0.98	373 South-west	08122808	-96.75040	35.92862	Foster Drlg. Co.	DUNGAN	N/A	N/A	Lincoln	17 N-5 E-22	SESESE	3538
1.36	374 South-west	08120074	-96.74590	35.92503	Foster Drlg. Co.	CARTER	N/A	N/A	Lincoln	17 N-5 E-26	SENWNW	4029
2.36	65 North-east	08120074	-96.73040	35.91771	Foster Drlg. Co.	DEACON	N/A	N/A	Lincoln	17 N-5 E-25	NENWSW	3440
2.55	386 South-west	08120074	-96.73030	35.91228	W.M. Mote et al	SCHOOL LAND	N/A	N/A	Lincoln	17 N-5 E-36	NWNWNW	4037
2.86	348 North-east	08120074	-96.72130	35.91409	Olson Oil Co.	ERL DEACON	N/A	304560	Lincoln	17 N-5 E-25	SWSWSE	3525
2.86	348 North-east	08120074	-96.72130	35.91409	Olson Oil Co.	ERL DEACON	N/A	304560	Lincoln	17 N-5 E-25	SWSWSE	3525

2.98	87 South-west	08121963	-96.72410	35.91047	Timson Oil Co.	HAPPY VALLEY	N/A	N/A	Lincoln	17 N-5 E-36	SENENW	3825
3.06	388 North-east	08121873	-96.71910	35.91228	Trigg Drlg. Co. Inc.	STATE SCHOOL LAND	N/A	N/A	Lincoln	17 N-5 E-36	NENWNE	3498
3.53	286 South-west	N/A	-96.71910	35.90325	CMS En. Inc.	SCHOOL LAND A	N/A	N/A	Lincoln	17 N-5 E-36	CTSENWSE	3919
5.21	44 North-east	08105876	-96.70050	35.88502	T.E. Berry	ORVILLE D COOK	N/A	N/A	Lincoln	16 N-6 E-6	SESESE	5900
5.60	339 South-west	08105876	-96.70030	35.87842	Red Fork Oil Co.	ETHRIDGE	N/A	N/A	Lincoln	16 N-6 E-7	EHSENE	3950
5.60	339 South-west	08105877	-96.70030	35.87842	Res. Dev. Inc.	WRIGHT	N/A	N/A	Lincoln	16 N-6 E-7	EHSENE	3950
5.60	339 South-west	08105877	-96.70030	35.87842	Res. Dev. Inc.	WRIGHT	N/A	N/A	Lincoln	16 N-6 E-7	EHSENE	3950
5.69	94 South-west	N/A	-96.69720	35.87861	C.W. Dobbins	HANCOCK	N/A	N/A	Lincoln	16 N-6 E-8	SWNW	3110
5.92	309 South-west	N/A	-96.69720	35.87500	Wil-MC Oil Corp.	HANCOCK	N/A	N/A	Lincoln	16 N-6 E-8	NWSW	3483
8.33	341 North-east	N/A	-96.67800	35.84490	Sunray DX Oil Co.	DESSIA JACK	N/A	N/A	Lincoln	16 N-6 E-21	SENWSW	3478
8.48	168 West	N/A	-96.68240	35.84120	Southland Oil Corp.	ETHRIDGE	N/A	N/A	Lincoln	16 N-6 E-20	SESESE	3742
8.62	389 Northeast	08121967	-96.67570	35.84128	Southland Oil Corp.	SILL	N/A	N/A	Lincoln	16 N-6 E-21	SWSESW	4070
8.77	392 West	N/A	-96.68350	35.83749	Res. Dev. Inc.	ETHRIDGE	N/A	000814	Lincoln	16 N-6 E-29	SHNENE	3150
8.79	8 West	N/A	-96.67910	35.83760	FCD Oil Corp.	SILL	N/A	N/A	Lincoln	16 N-6 E-28	SHNWNW	4050
9.28	119 North-east	N/A	-96.67460	35.83127	Res. Dev. Inc.	SILL	N/A	N/A	Lincoln	16 N-6 E-28	CTNESW	3800
9.28	119 North-east	N/A	-96.67460	35.83127	Res. Dev. Inc.	SILL	N/A	N/A	Lincoln	16 N-6 E-28	CTNESW	3800
9.41	259 West	N/A	-96.67800	35.82856	E.F. Moran Inc.	PETERSON	N/A	N/A	Lincoln	16 N-6 E-28	NESWSW	3725
10.17	242 South-west	N/A	-96.67350	35.81761	Res. Dev. Inc.	THURSTON-ROLLMAN	N/A	N/A	Lincoln	16 N-6 E-33	NENESW	3950
10.67	124 North-east	08102855	-96.66550	35.81309	Res. Dev. Inc.	MILTIMORE	N/A	N/A	Lincoln	16 N-6 E-33	CTSESE	3967
10.85	119 North-east	N/A	-96.66420	35.81037	Mid-Cont. Pet. Corp.	J B FLORER	N/A	N/A	Lincoln	15 N-6 E-4	NENENE	4135
11.13	101 West	N/A	-96.66530	35.80585	Resource Dev. Inc.	MILTIMORE	N/A	N/A	Lincoln	15 N-6 E-4	CTSENE	3958
11.26	344 South-west	08122635	-96.66530	35.80182	Cherokee Res. Inc.	GUIN	N/A	N/A	Lincoln	15 N-6 E-4	NESE	3696
11.30	108 North-east	08122635	-96.66220	35.80512	Sopac Expl. Inc.	STANLEY	N/A	N/A	Lincoln	15 N-6 E-3	SWSWNW	3926
11.31	384 North-east	08122811	-96.65990	35.80692	Little River En. Co.	STANLEY NORTH	N/A	N/A	Lincoln	15 N-6 E-3	NESWNW	3932
11.59	215 South-west	08122474	-96.66220	35.79970	Ben J. Taylor	RUSSELL	N/A	000814	Lincoln	15 N-6 E-3	NWSWSW	3880
11.67	316 South-west	08122700	-96.66220	35.79789	Demier Oil Co.	RUSSELL	N/A	000814	Lincoln	15 N-6 E-3	SWSWSW	4075
11.73	380 South	08106316	-96.65970	35.79594	Atmar Drlg. Co.	RUSSELL	N/A	000814	Lincoln	15 N-6 E-10	NENWNW	3644
11.78	24 South	08120387	-96.65770	35.79879	Demier Oil Co.	RUSSELL-DEMIER	N/A	N/A	Lincoln	15 N-6 E-3	WHSESW	4000

12.09	296 West	N/A	-96.65750	35.79594	Toto Gas Co.	BILL RUSSELL	N/A	000814	Lincoln	15 N-6 E-10	NWNENW	3634
12.10	95 West	08122588	-96.65530	35.79594	Wil-MC Oil Corp.	RUSSELL	N/A	000814	Lincoln	15 N-6 E-10	NENENW	3980
12.23	126 East	08121696	-96.65290	35.79413	G.O. Folk	HOWELL	N/A	N/A	Lincoln	15 N-6 E-10	SWNWNE	3812
13.14	5 West	N/A	-96.65130	35.78129	Delaware West. Oil. Corp.	ORR	N/A	N/A	Lincoln	15 N-6 E-15	WHNENW NE	4150
13.14	5 West	N/A	-96.65130	35.78129	Red Fork Oil Co.	ORR	N/A	N/A	Lincoln	15 N-6 E-15	WHNENW NE	4150
13.14	5 West	08100763	-96.65130	35.78129	Res. Dev. Inc.	ORR	N/A	N/A	Lincoln	15 N-6 E-15	WHNENW NE	4150
13.81	191 North-east	08122532	-96.64600	35.77226	Floyd Hubbell	#1 HOPEWELL	N/A	N/A	Lincoln	15 N-6 E-15	SENESE	3751
14.04	249 West	08100072	-96.65050	35.76864	Hubbell Drlg. Co.	HALE	N/A	N/A	Lincoln	15 N-6 E-15	SESWSE	3225
14.34	293 South-west	08120275	-96.64830	35.76319	Daube Co.	EGNEW	N/A	N/A	Lincoln	15 N-6 E-22	NWSENE	4230
14.38	292 North-east	08100938	-96.64270	35.76597	Res. Dev. Inc.	NICCUM	N/A	N/A	Lincoln	15 N-6 E-23	CTNWNW	4075
14.50	261 North-east	08100844	-96.64160	35.76326	Daube Co.	EGNEW	N/A	N/A	Lincoln	15 N-6 E-23	NESWNW	3130
14.76	360 West	08121650	-96.64740	35.75867	Targa Oil & Gas Inc.	NICCUM	N/A	N/A	Lincoln	15 N-6 E-22	NESE	3498
15.02	302 North-east	08122577	-96.63940	35.75603	McElreath & Harvey	JOHN B CHARLES	N/A	N/A	Lincoln	15 N-6 E-23	NWSESW	4222
15.20	387 West	08122577	-96.64600	35.75219	J.A. Hull Co.	RHODA FORD	N/A	685257	Lincoln	15 N-6 E-27	NENENE	4333
15.36	43 West	08120273	-96.64160	35.75042	Corondado Oil Co.	LUMM HARWELL	N/A	685257	Lincoln	15 N-6 E-26	SENWNW	3100
15.71	104 North-east	08120524	-96.63720	35.74680	Hubbell Drlg. Co.	LUMM	N/A	N/A	Lincoln	15 N-6 E-26	SESENW	4342
16.45	208 West	08121856	-96.63530	35.73586	Floyd Hubbell	BARBER	N/A	685102	Lincoln	15 N-6 E-35	SWNWNE	4257
16.86	175 West	08102913	-96.63260	35.73044	Hubbell Drlg. Co.	GRAHAM	N/A	685102	Lincoln	15 N-6 E-35	NENWSE	3727
16.86	175 West	08121765	-96.63260	35.73044	Inter-Globe En. Inc.	GRAHAM	N/A	685102	Lincoln	15 N-6 E-35	NENWSE	3050
16.89	23 North-east	08122548	-96.63040	35.73044	Inter-Globe En. Inc.	GRAHAM	N/A	685102	Lincoln	15 N-6 E-35	NWNESE	3200
16.96	393 North-east		-96.62620	35.73052	Hubbell Drlg. Co.	SCHOOL-HINDS	N/A	685102	Lincoln	15 N-6 E-36	NWNWSW	4266
17.22	366 North-east	08122548	-96.62510	35.72691	M M Res.	ARTIE	N/A	685102	Lincoln	15 N-6 E-36	CTNHSWS W	4250
17.43	223 South-west	08122190	-96.62970	35.72227	M M Res.	CARRIE	N/A	N/A	Lincoln	14 N-6 E-2	WHNENE	4308
17.45	111 North-east	08122587	-96.62620	35.72328	M M Res.	DAVID	N/A	685102	Lincoln	14 N-6 E-1	NWNWNW	3775
17.50	218 North-east	08122600	-96.62470	35.72296	R.H. Seigfried Inc.	UNIT 6	N/A	685102	Lincoln	14 N-6 E-1	NENWNW	3755
17.53	160 North-east	N/A	-96.62510	35.72238	M M Res.	LYNN	N/A	685102	Lincoln	14 N-6 E-1	CTNWNW	3465
18.01	336 South-west	N/A	-96.62640	35.71422	Roxana Pet. Corp.	E ZOLLERS	N/A	685102	Lincoln	14 N-6 E-1	SWNWSW	3185
18.14	86 North-east	08103223	-96.62120	35.71419	Roxana Pet. Corp.	ZOLLERS	N/A	685102	Lincoln	14 N-6 E-1	SWNESW	4180
18.19	248 South-west	08103223	-96.62420	35.71225	Roxana Pet. Corp.	ZOLLERS	N/A	685102	Lincoln	14 N-6 E-1	NESWSW	4167

18.19	311 Northeast	N/A	-96.61850	35.71432	Roxana Pet. Corp	COYARKAH	N/A	685102	Creek	14 N-7 E-6	NWSWSW	4185
18.26	6 Southwest	N/A	-96.62120	35.71225	Roxana Pet. Corp.	ZOLLERS	N/A	685102	Lincoln	14 N-6 E-1	NWSESW	4156
18.26	6 South-west	N/A	-96.62120	35.71225	Roxana Pet. Corp.	EFFIE ZOLLERS	N/A	685102	Lincoln	14 N-6 E-1	NWSESW	4170
18.28	100 North-east	N/A	-96.62000	35.71236	Amerada Pet. Corp.	WELCH	N/A	685102	Creek	14 N-6 E-1	NESESW	4183
18.28	329 Southwest	08123312	-96.62420	35.71062	Roxana Pet. Corp.	ZOLLERS	N/A	685102	Lincoln	14 N-6 E-1	SESWSW	4118
18.28	329 South-west	08120074	-96.62420	35.71062	Roxana Pet. Corp.	EFFIE ZOLLERS	N/A	685102	Lincoln	14 N-6 E-1	SESWSW	4170
18.29	323 South-west	08100876	-96.62410	35.71063	Leashold Mgmt. Corp.	ZOLLAR	N/A	685102	Lincoln	14 N-6 E-1	SESWSW	4313
18.31	217 North-east	08123784	-96.61860	35.71239	Roxana Pet. Corp	CO-YAR-KAH	N/A	685102	Creek	14 N-7 E-6	SWSWSW SW	4177
18.31	217 North-east	13302636	-96.61860	35.71239	Roxana Pet. Corp	COYARKAH	N/A	685102	Creek	14 N-7 E-6	SWSWSW SW	4158
18.38	168 East	13320587	-96.61870	35.71048	W. Phillips Co.	EDDIE JACK	N/A	685102	Creek	14 N-7 E-7	NWNWNW	3590
18.38	105 West	13300038	-96.62170	35.71063	Roxana Pet. Corp.	ZOLLERS	N/A	685102	Lincoln	14 N-6 E-1	SWSESW	4170
18.38	112 West	13300245	-96.62180	35.71063	Allied Materials Corp.	ZOLLAR	N/A	685102	Lincoln	14 N-6 E-1	SWSESW	0
18.38	112 West	13321109	-96.62180	35.71063	Allied Materials Corp.	ZOLLAR	N/A	685102	Lincoln	14 N-6 E-1	SWSESW	0
18.38	112 West	N/A	-96.62180	35.71063	Allied Materials Corp.	ZOLLAR	N/A	685102	Lincoln	14 N-6 E-1	SWSESW	4661
18.38	112 West	13300272	-96.62180	35.71063	Pelican Prod. Corp.	ZOLLARS	N/A	685102	Lincoln	14 N-6 E-1	SWSESW	4247
18.38	112 West	13300886	-96.62180	35.71063	Amabassador Oil Corp.	ZOLLAR	N/A	685102	Lincoln	14 N-6 E-1	SWSESW	4300
18.38	112 West	13308892	-96.62180	35.71063	Little River En. Co.	ZOLLAR	N/A	685102	Lincoln	14 N-6 E-1	SWSESW	4300
18.46	289 West	13308890	-96.62370	35.70866	W.T. Hinton Rec.	LOTS 23 & 24 BLK 4	N/A	685102	Lincoln	14 N-6 E-12	NENWNW	4168
18.46	289 West	13322095	-96.62370	35.70866	J.A. Hull Co.	DOWELL	N/A	685102	Lincoln	14 N-6 E-12	NENWNW	4133
18.46	399 South-west	13311690	-96.62370	35.70685	J.A. Hull Co.	DOWELL	N/A	685102	Lincoln	14 N-6 E-12	SENWNW	4138
18.46	399 South-west	13321122	-96.62370	35.70685	Patterson Oil Co.	DOWELL	N/A	685102	Lincoln	14 N-6 E-12	SENWNW	4174
18.46	399 South-west	13300542	-96.62370	35.70685	Rawhide Oil Co.	KATIE	N/A	685102	Lincoln	14 N-6 E-12	SENWNW	4100
18.46	115 Southwest	N/A	-96.62150	35.70866	Union Pet. Co.	N/A	N/A	685102	Lincoln	14 N-6 E-12	NWNENW	4141
18.53	219 North-east	13307967	-96.61800	35.71042	F.A. Moran	MATHES	N/A	685102	Creek	14 N-7 E-7	NWNWNW	2061
18.53	380 North-east	13322720	-96.61580	35.71045	W. Phillips Co.	EDDIE JACK	N/A	685102	Creek	14 N-7 E-7	NENWNW	4145
18.53	248 North-east	13322457	-96.61690	35.70954	D. Sneed	J M HOOD	N/A	685102	Creek	14 N-7 E-7	CTNWNW	1820
18.55	22 North-east	13323418	-96.61920	35.70866	C.F. Noble	MARY DOWELL	N/A	685102	Creek	14 N-6 E-12	NENENW	4185
18.60	273 North-	N/A	-96.61630	35.70861	W. Phillips Co.	E JACK	N/A	685102	Creek	14 N-7 E-7	SWNWNW	4054

	east											
18.61	318 North-east	13308046	-96.61580	35.70864	W. Phillips Co.	EDDIE JACK	N/A	685102	Creek	14 N-7 E-7	SENWNW	4145
18.64	227 West	13308047	-96.62150	35.70685	L. Friendman Oil Co.	TOWNSITE OF KEY WEST	N/A	685102	Lincoln	14 N-6 E-12	SWNENW	2701
18.64	227 West	ZZ022747	-96.62150	35.70685	Union Pet. Co.	KEYWEST	N/A	685102	Lincoln	14 N-6 E-12	SENENW	4187
18.69	24 North-east	13320365	-96.61850	35.70675	C.F. Farren	HOOD	N/A	685102	Creek	14 N-7 E-7	NWSWNW	4168
18.73	264 North-east	13301670	-96.61580	35.70683	C.F. Farren	HOOD	N/A	685102	Creek	14 N-7 E-7	NESWNW	4179
18.75	43 Northeast	13308039	-96.61810	35.70593	Delphi Intl. Inc.	KEYWEST	N/A	685102	Creek	14 N-7 E-7	WHSWNW	4172
18.75	43 North-east	13308042	-96.61810	35.70593	Leashold Mgmt. Corp.	KEYWEST	N/A	685102	Creek	14 N-7 E-7	WHSWNW	4172
18.76	280 West	13322348	-96.62150	35.70504	Harmack Pet. Co.	REBECCA SCOTT	N/A	685102	Lincoln	14 N-6 E-12	NWSENW	4170
18.79	86 West	13322174	-96.61920	35.70504	Union Pet. Co.	J S SCOTT	N/A	685102	Creek	14 N-6 E-12	NESENW	4153
18.81	30 West	13322735	-96.61850	35.70494	Pulaski Oil Co.	HOOD	N/A	685102	Creek	14 N-7 E-7	SWSWNW	4148
18.84	210 North-east	13322997	-96.61580	35.70503	C.F. Farren	HOOD (LOT 2)	N/A	685102	Creek	14 N-7 E-7	SESWNW	4190
18.91	142 West	13322447	-96.61920	35.70323	Amerada Pet. Corp.	JOHN LEWIS	N/A	685102	Creek	14 N-6 E-12	SESENW	4168
18.91	142 West	N/A	-96.61920	35.70323	J.V. Bailey	LOT 1 & 2 BLCK 12 KEYWEST TWST	N/A	685102	Creek	14 N-6 E-12	SESENW	4175
18.93	41 West	13308049	-96.61810	35.70322	Amerada Pet. Corp.	JOHN LEWIS	N/A	685102	Creek	14 N-7 E-7	NWNWSW	0
18.97	153 West	13308051	-96.61900	35.70233	Amerada Pet. Corp.	JOHN LEWIS	N/A	N/A	Creek	14 N-6 E-12		4156
19.01	343 North-east	13308050	-96.61360	35.70322	Pure Oil Co.	REUBEN STOVER	N/A	685102	Creek	14 N-7 E-7	NWNESW	4147
19.01	30 North-east	13321043	-96.61690	35.70232	Morrisey Drlg. Co.	JOHN LEWIS	N/A	685102	Creek	14 N-7 E-7	NWSW	4163
19.13	282 North-east	13301676	-96.61360	35.70141	Pure Oil Co.	R STOVER	N/A	685102	Creek	14 N-7 E-7	SWNESW	4138
19.14	3 West	13300142	-96.61650	35.70047	Stroud Oil Prop. Inc.	BATCHELOR	N/A	685102	Creek	14 N-7 E-7	NESWSW	3800
19.15	270 North-east	N/A	-96.61360	35.70106	Sun Oil Co.	JOHN LEWIS	N/A	685102	Creek	14 N-7 E-7	SWNESW	0
19.17	164 West	N/A	-96.61810	35.69961	Roxana Pet. Corp	J LEWIS	N/A	685102	Creek	14 N-7 E-7	NWSWSW	2015
19.20	246 North-east	N/A	-96.61360	35.70037	Sunray DX Oil Co.	STROUD PRUE SD UNIT	N/A	685102	Creek	14 N-7 E-7	NWSESW	2960
19.21	28 North-east	13321984	-96.61580	35.69961	Roxana Pet. Corp	J LEWIS	N/A	685102	Creek	14 N-7 E-7	NESWSW	4176
19.21	278 West	N/A	-96.61900	35.69872	Sunray DX Oil Co.	STROUD PRUE SD UNIT TR 35	N/A	685102	Creek	14 N-6 E-12	NESESW	3010
19.23	333 South-west	13300287	-96.61920	35.69781	Amerada Pet. Corp.	JOHN LEWIS	N/A	685102	Creek	14 N-6 E-12	NESESW	4149
19.32	66 South-west	13300287	-96.61580	35.69780	Sunray DX Oil Co.	STROUD PRUE SD UNIT TR 20	N/A	685102	Creek	14 N-7 E-7	SESWSW	2990
19.36	334 South-west	13320884	-96.61810	35.69611	Sun Expl. Co.	STROUD PRUE UNIT	N/A	685102	Creek	14 N-7 E-18	NWNWNW	2666

19.36	334 South-west	13323059	-96.61810	35.69611	Midstates Oil Corp.	ESTATE LAND CO	N/A	685102	Creek	14 N-7 E-18	NWNWNW	2666
19.45	283 North-east	13322990	-96.61140	35.69780	Shell Oil Co.	J LEWIS B	N/A	685102	Creek	14 N-7 E-7	SESESW	2931
19.48	14 North-east	13323495	-96.61360	35.69611	Sun Expl. Co.	STROUD PRUE UNIT	N/A	685102	Creek	14 N-7 E-18	NWNENW	2945
19.48	14 North-east	13300886	-96.61360	35.69611	J.J. Fleet et al	FOUSHEE	N/A	685102	Creek	14 N-7 E-18	NWNENW	2945
19.52	263 South-west	13301670	-96.61580	35.69430	Midstates Oil Corp.	ESTATE LAND CO	N/A	685102	Creek	14 N-7 E-18	SENWNW	3010
19.65	91 Northeast	13308051	-96.61140	35.69430	J.J. Fleet et al	A L FOUSHEE	N/A	685102	Creek	14 N-7 E-18	SENENW	2946
19.72	171 West	13322990	-96.61360	35.69249	Hubbell & Webb	FOUSHEE	N/A	685102	Creek	14 N-7 E-18	NWSENW	2928
19.72	171 West	13322174	-96.61360	35.69249	Sun Expl. Co.	STROUD PRUE UNIT	N/A	685102	Creek	14 N-7 E-18	NWSENW	2964
19.72	171 West	N/A	-96.61360	35.69249	Midstates Oil Corp.	ESTATE LAND CO	N/A	685102	Creek	14 N-7 E-18	NWSENW	2964
19.80	211 Northeast	N/A	-96.60910	35.69249	Sun Expl. Co.	STROUD PRUE UNIT	N/A	685102	Creek	14 N-7 E-18	NWSWNE	2876
19.80	211 North-east	N/A	-96.60910	35.69249	Vierson Oil Co.	A A VIERSEN	N/A	685102	Creek	14 N-7 E-18	NWSWNE	2876
19.80	211 North-east	N/A	-96.60910	35.69249	Oil Center Op. Inc.	STROUD PRUE SAND UNIT	N/A	685102	Creek	14 N-7 E-18	NWSWNE	2876
19.88	46 West	N/A	-96.61140	35.69069	Sunray DX Oil Co.	STROUD PRUE SD UNIT TR 37	N/A	685102	Creek	14 N-7 E-18	SESENW	2985
19.95	303 West	N/A	-96.61360	35.68888	Texas Co.	JOHNNIE GIBSON	N/A	685102	Creek	14 N-7 E-18	NWNESW	2975
19.96	335 North-east	N/A	-96.60690	35.69069	Vierson Oil Co.	A A VIERSEN	N/A	685102	Creek	14 N-7 E-18	SESWNE	2873
20.04	81 North-east	N/A	-96.60910	35.68888	M.L. Gaskill	MALEY-LESLIE	N/A	685102	Creek	14 N-7 E-18	NWNWSE	2905
20.04	81 North-east	N/A	-96.60910	35.68888	Sunray DX Oil Co.	STROUD PRUE SD UNIT TR 40	N/A	685102	Creek	14 N-7 E-18	NWNWSE	2940
20.31	165 North-east	N/A	-96.60690	35.68527	Red Rock Pet.	POLAR	N/A	N/A	Creek	14 N-7 E-18	NESWSE	3086
20.31	165 North-east	N/A	-96.60690	35.68527	NBI Services Inc.	POLAR	N/A	N/A	Creek	14 N-7 E-18	NESWSE	3102
21.97	56 West	N/A	-96.60020	35.66172	Burke-Greis Oil Corp	FOLLANSBEE	N/A	733968	Creek	14 N-7 E-29	SWSWNW	2884
22.04	314 West	N/A	-96.60240	35.65989	Burke-Greis Oil Corp	VANDERSLICE	N/A	733968	Creek	14 N-7 E-30	NENESE	2893
22.04	314 West	N/A	-96.60240	35.65989	Burke-Greis Oil Corp	VANDERSLICE	N/A	733968	Creek	14 N-7 E-30	NENESE	2875
22.05	320 North-east	N/A	-96.59580	35.66172	Sinclair-Prairie Oil Co.	COMMUNITY ARTHUR TEBE	N/A	N/A	Creek	14 N-7 E-29	SWSENW	4227
22.09	127 West	N/A	-96.60020	35.65992	A.J. Peters	COHN	N/A	733968	Creek	14 N-7 E-29	NWNWSW	2860
22.09	127 West	13320007	-96.60020	35.65992	A.J. Peters	HUBBELL	N/A	733968	Creek	14 N-7 E-29	NWNWSW	2860
22.40	207 West	N/A	-96.59910	35.65540	C.A. Thomas	COHN	N/A	N/A	Creek	14 N-7 E-29	CTSWSW	2902
23.84	54 West	N/A	-96.58900	35.63627	Enterprise Expl. Inc.	PLATO	N/A	N/A	Okfuskee	13 N-7 E-5	CTSENWNE	2792
24.10	117 East	N/A	-96.58680	35.63266	Enterprise Expl. Inc.	PLATO	N/A		Okfuskee	13 N-7 E-5	CTSWSENE	3180
24.24	279 West	N/A	-96.59120	35.63085	Champlin Expl.	MCGEHEE	N/A	N/A	Okfuskee	13 N-7 E-5	CTNWNWS	4070

					Inc.						E	
24.24	279 West	N/A	-96.59120	35.63085	C.W. Investments	PLATO	N/A	N/A	Okfuskee	13 N-7 E-5	CTNWNWSE	2833
24.24	279 West	N/A	-96.59120	35.63085	NBI Services Inc.	PLATO	N/A	N/A	Okfuskee	13 N-7 E-5	CTNWNWSE	2833
24.37	315 North-east	N/A	-96.58460	35.62905	C.W. Investments	PLATO	N/A	N/A	Okfuskee	13 N-7 E-5	CTSENESE	3625
24.48	100 West	N/A	-96.58900	35.62724	Enterprise Expl. Inc.	PLATO	N/A	N/A	Okfuskee	13 N-7 E-5	NESWSE	3270
24.58	295 North-east	N/A	-96.58460	35.62603	C.W. Investments	PLATO	N/A	N/A	Okfuskee	13 N-7 E-5	NHSESESE	882
24.58	295 North-east	N/A	-96.58460	35.62603	Enterprise Expl. Inc.	PLATO	N/A	N/A	Okfuskee	13 N-7 E-5	NHSESESE	882
24.58	294 North-east	N/A	-96.58460	35.62590	C.W. Investments	PLATO	N/A	N/A	Okfuskee	13 N-7 E-5	SESESE	3625
24.60	188 West	N/A	-96.58990	35.62543	C.W. Investments	PLATO	N/A	N/A	Okfuskee	13 N-7 E-5	WHSESWSE	3671
24.73	120 West	N/A	-96.58900	35.62357	Enterprise Expl. Inc.	PLATO	N/A	N/A	Okfuskee	13 N-7 E-8	NENWNE	3193
24.75	291 North-east	N/A	-96.58440	35.62357	Enterprise Expl. Inc.	PLATO	N/A	N/A	Okfuskee	13 N-7 E-8	CTNENENE	3665
24.87	270 North-east	13321537	-96.58450	35.62177	Jay Pet. Inc.	CRAIN	N/A	N/A	Okfuskee	13 N-7 E-8	CTSENENE	1540
24.96	280 South-west	N/A	-96.59010	35.61906	Huffman & Malloy	CRAIN	N/A	N/A	Okfuskee	13 N-7 E-8	CTSWNE	3165
25.05	265 North-east	N/A	-96.58450	35.62166	Woods Drlg. Co.	CRAIN	N/A	N/A	Okfuskee	13 N-7 E-8	SENENE	3121
25.29	180 North-east	N/A	-96.58140	35.61911	Jay Pet. Inc.	ED BAILEY	N/A	N/A	Okfuskee	13 N-7 E-9	CTSWNW	4070
25.31	318 North-east	13308609	-96.58030	35.62001	R.L. Bailey	ED BAILEY (UNCLE ED)	N/A	N/A	Okfuskee	13 N-7 E-9	NESWNW	3653
25.82	40 Northeast	13308609	-96.57690	35.61188	Trans-Viking Pet. Inc.	SUNRAY UNIT	N/A	N/A	Okfuskee	13 N-7 E-9	SESW	4077
26.08	213 North-east	N/A	-96.57360	35.60899	Viersen & Cochran	HALL	N/A	N/A	Okfuskee	13 N-7 E-16	NWNWNE	4210
26.11	223 West	N/A	-96.57780	35.60720	Unit Ops. Inc.	COLLINS	N/A	394215	Okfuskee	13 N-7 E-16	SWNENW	0
26.11	223 West	N/A	-96.57780	35.60720	Trans-Viking Pet. Inc.	COLLINS	N/A	394215	Okfuskee	13 N-7 E-16	SWNENW	4032
26.22	299 West	N/A	-96.57790	35.60537	W. Igleheart	COLLINS	N/A	394215	Okfuskee	13 N-7 E-16	NWSENW	4201
26.22	299 West	13330134	-96.57790	35.60537	Trans-Viking Pet. Inc.	COLLINS	N/A	394215	Okfuskee	13 N-7 E-16	NWSENW	4201
26.30	243 West	13320482	-96.57680	35.60447	Trans-Viking Pet. Inc.	COLLINS	N/A	394215	Okfuskee	13 N-7 E-16	SENW	4235
26.39	120 North-east	N/A	-96.57240	35.60447	Amerada Pet. Corp.	BEAR ESTATE	N/A	N/A	Okfuskee	13 N-7 E-16	CTSWNE	4130
26.71	23 North-east	N/A	-96.57130	35.59995	Turley Oil Co.	MUNSON	N/A	N/A	Okfuskee	13 N-7 E-16	SENWSE	3722
26.81	169 North-east	N/A	-96.56910	35.59899	Turley Oil Co.	MUNSON	N/A	394215	Okfuskee	13 N-7 E-16	NWSESE	3700
26.83	195 West	13330236	-96.57270	35.59759	Turley Oil Co.	MOBIL A	N/A	N/A	Okfuskee	13 N-7 E-16	NWSWSE	3709
27.10	318 West	13330239	-96.57240	35.59368	Greenland Drlg. Co.	HALL	N/A	394215	Okfuskee	13 N-7 E-21	NWNWNE	3710

27.47	111 West	13330235	-96.56790	35.58916	F.C. Summers	ALDRIDGE UNIT	N/A	394215	Okfuskee	13 N-7 E-21	CTSWSENE	2842
27.73	146 South-west	N/A	-96.56630	35.58554	Cameo Oil. Co.	KLABZUBA A	N/A	394215	Okfuskee	13 N-7 E-21	SENESE	1163
27.74	200 Southwest	N/A	-96.56680	35.58527	Anchor Pet. Co.	KLABZUBA	N/A	394215	Okfuskee	13 N-7 E-21	SENESE	3210
27.74	200 South-west	13308647	-96.56680	35.58527	Morgan & Friend	KLABZUBA	N/A	394215	Okfuskee	13 N-7 E-21	SENESE	0
27.74	200 South-west	N/A	-96.56680	35.58527	Cameo Oil. Co.	KLABZUBA	N/A	394215	Okfuskee	13 N-7 E-21	SENESE	4152
28.03	50 West	N/A	-96.56320	35.58190	B.B. Blair	SNELL	N/A	N/A	Okfuskee	13 N-7 E-22	SHSWSW	3270
28.16	263 West	N/A	-96.56460	35.57953	B.B. Blair	KLUTTS	N/A	N/A	Okfuskee	13 N-7 E-27	NWNWNW	3295
28.21	133 North-east	N/A	-96.56020	35.57998	B.B. Blair	WAGNER	N/A	N/A	Okfuskee	13 N-7 E-27	NWNENW	3268
28.47	381 West	N/A	-96.56410	35.57501	B.B. Blair	FOLLANSBEE	N/A	N/A	Okfuskee	13 N-7 E-27	NESWSWNW	3249
28.57	64 West	N/A	-96.56020	35.57456	B.B. Blair	CASTLE	N/A	N/A	Okfuskee	13 N-7 E-27	SWSENW	3280
28.65	319 North-east	N/A	-96.55570	35.57456	Bristow Res. Inc.	ELIAS	N/A	N/A	Okfuskee	13 N-7 E-27	SWSWNE	4330
28.66	348 North-east	N/A	-96.55540	35.57456	Jay Pet. Inc.	OROURKE	N/A	N/A	Okfuskee	13 N-7 E-27	EHSWSWNE	4435
28.90	384 North-east	N/A	-96.55350	35.57095	Yinger Pet.	BUTLER	N/A	394215	Okfuskee	13 N-7 E-27	SENWSE	3800
28.90	384 Northeast	N/A	-96.55350	35.57095	Yinger Pet.	BUTLER	N/A	394215	Okfuskee	13 N-7 E-27	SENWSE	3800
28.90	384 Northeast	N/A	-96.55350	35.57095	Summit Drlg. Corp.	BUTLER	N/A	394215	Okfuskee	13 N-7 E-27	SENWSE	4250
28.97	55 West	N/A	-96.55800	35.56914	Tulsa Pet. Res. Inc.	ELIAS-ADAMS	N/A	N/A	Okfuskee	13 N-7 E-27	NESESW	4325
29.00	143 North-east	N/A	-96.55570	35.56914	Tulsa Pet. Res. Inc.	ELIAS-ADAMS	N/A	394215	Okfuskee	13 N-7 E-27	NWSWSE	4327
29.16	278 North-east	N/A	-96.55350	35.56733	Cameo Oil. Co.	CARNEY ADAMS A	N/A	394215	Okfuskee	13 N-7 E-27	SESWSE	3725
29.37	369 North-east	N/A	-96.55130	35.56548	Cameo Oil. Co.	CARNEY ADAMS	N/A	N/A	Okfuskee	13 N-7 E-34	NWNENE	4420
29.41	99 North-east	N/A	-96.55350	35.56367	Cameo Oil. Co.	CARNEY ADAMS	N/A	N/A	Okfuskee	13 N-7 E-34	SENWNE	3705
29.57	209 North-east	N/A	-96.55130	35.56186	Cameo Oil. Co.	CARNEY ADAMS	N/A	N/A	Okfuskee	13 N-7 E-34	NWSENE	3777
29.63	52 West	N/A	-96.55360	35.56014	Cameo Oil. Co.	WILLIAMS	N/A	N/A	Okfuskee	13 N-7 E-34	SESWNE	3776
29.67	336 North-east	N/A	-96.54910	35.56000	Cameo Oil. Co.	ADAMS	N/A	N/A	Okfuskee	13 N-7 E-34	SESENE	1569
29.67	336 North-east	N/A	-96.54910	35.56000	Wood Oil Co.	ADAMS	N/A	N/A	Okfuskee	13 N-7 E-34	SESENE	3810
29.67	336 North-east	N/A	-96.54910	35.56000	Anchor Pet. Co.	ADAMS	N/A	N/A	Okfuskee	13 N-7 E-34	SESENE	3280
29.78	146 East	N/A	-96.55120	35.55825	Cameo Oil. Co.	ANTHIS	N/A	N/A	Okfuskee	13 N-7 E-34	NWNESE	3720
29.80	160 East	13300877	-96.55100	35.55798	Cameo Oil. Co.	ANTHIS	N/A	N/A	Okfuskee	13 N-7 E-34	NWNESE	3830
29.90	75 West	13302756	-96.55350	35.55644	Cameo Oil. Co.	LANGLEY	N/A	N/A	Okfuskee	13 N-7 E-34	SENWSE	3847
30.03	124 East	13302756	-96.55130	35.55464	Cameo Oil. Co.	PARKS	N/A	N/A	Okfuskee	13 N-7 E-34	NWSESE	3850

30.05	79 West	N/A	-96.55350	35.55422	Cameo Oil. Co.	LANGLEY	N/A	N/A	Okfuskee	13 N-7 E-34	NWSWSE	3820
30.28	251 West	N/A	-96.55520	35.55034	Shaw-Hughes	JENKINS	N/A	N/A	Okfuskee	12 N-7 E-3	NWNWNE	3822
30.57	112 North-east	N/A	-96.54860	35.54808	J.G. Buell	WILLIAM LASLEY	N/A	N/A	Okfuskee	12 N-7 E-3	SENENE	3850
32.89	323 North-east	N/A	-96.53090	35.51764	J.A. Roberson	SUTHERLAND	N/A	N/A	Okfuskee	12 N-7 E-14	NESENE	3787
36.13	283 North-east	N/A	-96.51750	35.47221	Midstates Oil Corp.	M K REPLOGLE	N/A	N/A	Okfuskee	12 N-7 E-36	SESWNE	3387
36.20	35 North-east	N/A	-96.51970	35.47052	C.E. Gragg	CURRY	N/A	N/A	Okfuskee	12 N-7 E-36	NWNWSE	4352
36.86	365 North-east	N/A	-96.51300	35.46142	Viersen & Cochran	MEYERS	N/A	N/A	Okfuskee	11 N-7 E-1	SENENE	4606
36.96	253 West	13308716	-96.51970	35.45962	Heston Oil Co.	ANTHIS	N/A	N/A	Okfuskee	11 N-7 E-1	CTNWSWNE	4414
37.81	360 West	13308716	-96.51740	35.44679	KMT TX Pet. Corp.	SISTER	N/A	N/A	Okfuskee	11 N-7 E-12	SENWNE	3807
38.44	107 North-east	13300959	-96.50870	35.43956	Deep Rock Oil Corp.	D C CHASTAIN	N/A	N/A	Okfuskee	11 N-8 E-7	SENWSW	3693
38.46	102 Northeast	13390521	-96.50860	35.43936	Deep Rock Oil Corp.	D C CHASTAIN	N/A	N/A	Okfuskee	11 N-8 E-7	SENWSW	4480
38.68	396 Northeast	N/A	-96.50420	35.43775	D.B. Malernee	WHEELER	N/A	619665	Okfuskee	11 N-8 E-7	NESESW	3675
38.83	257 West	N/A	-96.50970	35.43321	Whitmar Expl. Co.	WHITE HERON	N/A	N/A	Okfuskee	11 N-8 E-18	NWNW	4415
38.91	238 Northeast	13303180	-96.50410	35.43411	Phillips Pet. Co.	DEERWESTER	N/A	N/A	Okfuskee	11 N-8 E-18	NENENW	3651
39.01	305 South-west	13303182	-96.50860	35.43049	Murphy Oil Co.	MAY	N/A	N/A	Okfuskee	11 N-8 E-18	NESWNW	3627
39.35	91 West	N/A	-96.50410	35.42688	McIntyre-Sherman-Cummings	GRAGG	N/A	N/A	Seminole	11 N-8 E-18	NENESW	3633
39.36	92 West	N/A	-96.50410	35.42681	J. Scott Drlg. Co.	WILKINSON	N/A	N/A	Seminole	11 N-8 E-18	NENESW	2763
40.79	185 North-east	N/A	-96.49090	35.40889	Reserve Expl. Co.	PRUETT	N/A	N/A	Seminole	11 N-8 E-20	CTNESWSW	4455
40.81	268 South-west	N/A	-96.49530	35.40697	Mealy-Wolfe Drlg. Co.	KENNEDY	N/A	N/A	Seminole	11 N-8 E-19	SESESE	3725
42.89	395 North-east	N/A	-96.47770	35.37987	Prairie Oil Co.	J W LESTER	N/A	171209	Seminole	11 N-8 E-32	NESESE	3473
42.91	300 North-east	N/A	-96.47860	35.37894	Home-Stake Prod. Co.	WILLIAMS	N/A	171209	Seminole	11 N-8 E-32	CTSESE	3466
42.97	36 W-est	N/A	-96.48250	35.37806	Phillips Pet. Co.	J W SARTIN	N/A	N/A	Seminole	11 N-8 E-32	SESWSE	4013
43.01	372 North-east	N/A	-96.47770	35.37806	Prairie Oil Co.	J W LESTER	N/A	171209	Seminole	11 N-8 E-32	SESESE	3439
43.09	161 East	N/A	-96.47990	35.37642	Laurel Oil Co.	SARTIN	N/A	171209	Seminole	10 N-8 E-5	NWNENE	3445
43.11	41 West	N/A	-96.48220	35.37609	Gypsy Oil Co.	EAST WILLIAMS	N/A	171209	Seminole	10 N-8 E-5	NENWNE	3515
43.13	157 North-east	N/A	-96.47990	35.37609	Magnolia Pet. Co.	J F REMY	N/A	171209	Seminole	10 N-8 E-5	NWNENE	3459
43.14	361 North-east	N/A	-96.47770	35.37642	Laurel Oil Co.	SARTIN	N/A	171209	Seminole	10 N-8 E-5	NENENE	3500
43.18	353 Northeast	N/A	-96.47770	35.37609	Magnolia Pet. Co.	J F REMY	N/A	171209	Seminole	10 N-8 E-5	NENENE	3421

43.18	353 Northeast	N/A	-96.47770	35.37609	Magnolia Pet. Co.	J F REMY	N/A	171209	Seminole	10 N-8 E-5	NENENE	4200
43.18	284 West	N/A	-96.48440	35.37428	Gypsy Oil Co.	EAST WILLIAMS	N/A	171209	Seminole	10 N-8 E-5	SWNWNE	3484
43.22	226 Northeast	N/A	-96.47880	35.37519	Home-Stake Prod. Co.	MCCRARY-REMY UNIT	N/A	171209	Seminole	10 N-8 E-5	CTNENE	3487
43.29	346 West	N/A	-96.48440	35.37248	Gypsy Oil Co.	M WISNER	N/A	171209	Seminole	10 N-8 E-5	NWSWNE	3479
43.33	162 West	N/A	-96.48220	35.37248	Johnson-Gibson Opt. Co. Inc.	GEORGE D PEEBLES	N/A	171209	Seminole	10 N-8 E-5	NESWNE	4338
43.33	162 West	N/A	-96.48220	35.37248	C&C Tank Truck Inc.	GEO D PEEBLES	N/A	171209	Seminole	10 N-8 E-5	NESWNE	4338
43.35	304 Southwest	N/A	-96.48330	35.37142	Home-Stake Prod. Co.	FIXICO C	N/A	171209	Seminole	10 N-8 E-5	CTSWNE	3504
43.35	0 Northeast	13320602	-96.48040	35.37283	Home-Stake Prod. Co.	J F REMY	N/A	171209	Seminole	10 N-8 E-5	NWSENE	3520
43.40	193 Northeast	N/A	-96.47770	35.37248	Magnolia Pet. Co.	J F REMY	N/A	171209	Seminole	10 N-8 E-5	NESENE	3444
43.46	249 West	N/A	-96.48220	35.37067	Gypsy Oil Co.	M WISNER	N/A	171209	Seminole	10 N-8 E-5	SESWNE	3454
43.47	383 Northeast	13322272	-96.47560	35.37248	Gypsy Oil Co.	BEN FIXICO	N/A	171209	Seminole	10 N-8 E-4	NWSWNW	3445
43.50	353 Northeast	N/A	-96.47560	35.37150	Gypsy Oil Co.	BEN FIXICO	N/A	171209	Seminole	10 N-8 E-4	SWSWNW	3451
43.51	55 West	N/A	-96.47990	35.37067	Magnolia Pet. Co.	J E REMY	N/A	171209	Seminole	10 N-8 E-5	SWSENE	3461
43.54	139 Northeast	N/A	-96.47770	35.37067	Magnolia Pet. Co.	JNO F REMY	N/A	171209	Seminole	10 N-8 E-5	SESENE	3585
43.59	305 West	N/A	-96.48220	35.36886	Gypsy Oil Co.	L N ALDRIDGE	N/A	171209	Seminole	10 N-8 E-5	NENWSE	3487
43.62	112 West	N/A	-96.47990	35.36886	Sinclair Oil Co.	BEN FIXICO	N/A	171209	Seminole	10 N-8 E-5	NWNESE	3453
43.66	72 Northeast	N/A	-96.47780	35.36886	Horseshoe Oil Co.	VONI	N/A	171209	Seminole	10 N-8 E-5	NENESE	1990
43.66	80 Northeast	13302762	-96.47770	35.36886	Sinclair Oil Co.	BEN FIXICO	N/A	171209	Seminole	10 N-8 E-5	NENESE	3468
43.69	368 West	13302762	-96.48220	35.36705	Gypsy Oil Co.	ALDRIDGE	N/A	171209	Seminole	10 N-8 E-5	SENWSE	3488
43.70	258 Northeast	N/A	-96.47570	35.36895	Cosden Oil Co.	NANCY JACKSON	N/A	171209	Seminole	10 N-8 E-4	NWNWSW	3448
43.71	377 Northeast	N/A	-96.47440	35.36923	Mid-Cont. Pet. Corp.	NANCY JACKSON	N/A	171209	Seminole	10 N-8 E-4	NENWSW	1765
43.73	181 West	N/A	-96.47990	35.36705	Sinclair Oil Co.	BEN FIXICO	N/A	171209	Seminole	10 N-8 E-5	SWNESE	3459
43.78	307 West	N/A	-96.48100	35.36604	Home-Stake Prod. Co.	V SAMPSON	N/A	171209	Seminole	10 N-8 E-5	SE	3585
43.78	7 Northeast	N/A	-96.47770	35.36705	Sinclair Oil Co.	BEN FIXICO	N/A	171209	Seminole	10 N-8 E-5	SENESE	3410
43.78	7 Northeast	N/A	-96.47770	35.36705	Sinclair Oil Co.	BEN FIXICO	N/A	171209	Seminole	10 N-8 E-5	SENESE	3452
43.79	360 Northeast	N/A	-96.47410	35.36812	Mid-Cont. Pet. Corp.	NANCY JACKSON	N/A	171209	Seminole	10 N-8 E-4	NENWSW	1758
43.82	189 Northeast	N/A	-96.47560	35.36706	Cosden Oil Co.	N JACKSON	N/A	171209	Seminole	10 N-8 E-4	SWNWSW	3439
43.84	396 Northeast	N/A	-96.47340	35.36754	Mid-Cont. Pet. Corp.	NANCY JACKSON	N/A	171209	Seminole	10 N-8 E-4	SENWSW	1757
43.85	49 Northeast	N/A	-96.47690	35.36629	Home-Stake Prod. Co.	BEN FIXICO A	N/A	171209	Seminole	10 N-8 E-5	SENESE	3550
43.85	255 West	N/A	-96.47990	35.36525	Gypsy Oil Co.	VINA SAMPSON	N/A	171209	Seminole	10 N-8 E-5	NWSESE	3475

43.85	388 Northeast	13300400	-96.47340	35.36734	Mid-Cont. Pet. Corp.	NANCY JACKSON	N/A	171209	Seminole	10 N-8 E-4	SENWSW	4247
43.86	312 Northeast	13322341	-96.47410	35.36696	Mid-Cont. Pet. Corp.	NANCY JACKSON	N/A	171209	Seminole	10 N-8 E-4	SENWSW	1764
43.88	67 West	13322261	-96.47790	35.36552	Gypsy Oil Co.	VINA SAMPSON	N/A	171209	Seminole	10 N-8 E-5	NESESE	3439
43.90	67 West	13322574	-96.47770	35.36525	Gypsy Oil Co.	VINA SAMPSON	N/A	171209	Seminole	10 N-8 E-5	NESESE	3447
43.93	198 West	N/A	-96.47880	35.36434	Home-Stake Prod. Co.	V SAMPSON	N/A	171209	Seminole	10 N-8 E-5	CTSESE	3460
43.94	117 Northeast	13323342	-96.47560	35.36526	Mid-Cont. Pet. Corp.	NANCY JACKSON	N/A	171209	Seminole	10 N-8 E-4	NWSWSW	3433
44.01	391 West	13323761	-96.48030	35.36267	Home-Stake Prod. Co.	V SAMPSON	N/A	171209	Seminole	10 N-8 E-5	SWSESE	3464
44.01	141 West	13322955	-96.47770	35.36344	Gypsy Oil Co.	VINA SAMPSON	N/A	171209	Seminole	10 N-8 E-5	SESESE	3451
44.06	41 Northeast	N/A	-96.47560	35.36345	Cosden Oil Co.	NANCY JACKSON	N/A	171209	Seminole	10 N-8 E-4	SWSWSW	3473
44.13	215 West	13300550	-96.47770	35.36157	Gypsy Oil Co.	REPLOGEL	N/A	171209	Seminole	10 N-8 E-8	NENENE	3460
44.25	290 West	N/A	-96.47770	35.35977	Gulf Oil Corp.	REPLOGLE	N/A	171209	Seminole	10 N-8 E-8	SWNENE	0
44.25	290 West	N/A	-96.47770	35.35977	Gypsy Oil Co.	REPLOGLE	N/A	171209	Seminole	10 N-8 E-8	SENENE	3460
44.27	344 Northeast	N/A	-96.47110	35.36159	Carter Oil Co.	B T HALL	N/A	171209	Seminole	10 N-8 E-9	NWNENW	3535
44.29	104 West	13323900	-96.47550	35.35979	Carter Oil Co.	B T HALL	N/A	171209	Seminole	10 N-8 E-9	SWNWNW	3483
44.34	83 Northeast	13390521	-96.47330	35.35979	Carter Oil Co.	B T HALL	N/A	171209	Seminole	10 N-8 E-9	SENWNW	3489
44.38	270 Northeast	13390521	-96.47110	35.35979	Gardner Pet. Co.	BRUNER	N/A	171209	Seminole	10 N-8 E-9	SWNENW	3932
44.41	179 West	13324028	-96.47550	35.35798	Carter Oil Co.	ADAM STARR	N/A	171209	Seminole	10 N-8 E-9	NWSWNW	3499
44.45	8 Northeast	13321537	-96.47330	35.35798	Carter Oil Co.	ADAM STARR	N/A	171209	Seminole	10 N-8 E-9	NESWNW	3502
44.52	253 West	N/A	-96.47550	35.35617	Amerada Pet. Corp.	H H ROGERS	N/A	171209	Seminole	10 N-8 E-9	SESWNW	3502
44.52	253 West	N/A	-96.47550	35.35617	Amerada Pet. Corp.	H H ROGERS	N/A	171209	Seminole	10 N-8 E-9	SWSWNW	3461
44.62	125 Northeast	N/A	-96.47100	35.35617	Carter Oil Co.	ADAM STARR	N/A	171209	Seminole	10 N-8 E-9	SWSENW	3483
44.64	327 West	13324201	-96.47550	35.35437	Sinclair Oil Co.	MASANER BUNNER	N/A	171209	Seminole	10 N-8 E-9	NWNWSW	3480
44.65	16 West	13324203	-96.47230	35.35521	Salmon Corp.	BAKER	N/A	171209	Seminole	10 N-8 E-9	NENWSW	3505
44.65	310 Northeast	13324231	-96.46890	35.35617	Carter Oil Co.	ADAM STARR	N/A	171209	Seminole	10 N-8 E-9	SESENW	3459
44.69	136 West	13324221	-96.47330	35.35437	Sinclair Oil Co.	MASANER BUNNER	N/A	171209	Seminole	10 N-8 E-9	NENWSW	3465
44.73	57 Northeast	13324242	-96.47110	35.35437	Gardner Pet. Co.	KIKER	N/A	171209	Seminole	10 N-8 E-9	NWNESW	3464
44.73	262 West	13324291	-96.47440	35.35346	Pure Oil Co.	D REPLOGLE	N/A	171209	Seminole	10 N-8 E-9	CTNWSW	3463
44.77	248 Northeast	13322457	-96.46890	35.35437	Gardner Pet. Co.	KIKER	N/A	171209	Seminole	10 N-8 E-9	NENESW	3426
44.77	389 West	13324331	-96.47550	35.35256	Sinclair Oil Co.	MASANER BUNNER	N/A	171209	Seminole	10 N-8 E-9	SWNWSW	3492
44.81	121 Northeast	13324311	-96.47000	35.35346	Salmon Corp.	ROGERS-M C UNIT	N/A	171209	Seminole	10 N-8 E-9	CTNESW	3442
44.81	119 Northeast	13324332	-96.47000	35.35340	Altex Res. Inc.	ROGERS	N/A	171209	Seminole	10 N-8 E-9	NHSHNESW	4245

44.81	198 West	13324371	-96.47330	35.35256	Sinclair Oil Co.	MASANER BUNNER	N/A	171209	Seminole	10 N-8 E-9	SENWSW	3487
44.85	5 West	13324394	-96.47110	35.35256	Gardner Pet. Co.	BRUNER	N/A	171209	Seminole	10 N-8 E-9	SWNESW	3484
44.88	188 Northeast	13324323	-96.46890	35.35256	Gardner Pet. Co.	KIKER	N/A	171209	Seminole	10 N-8 E-9	SENESW	3430
44.89	138 West	13324396	-96.47230	35.35160	Salmon Corp.	BAKER	N/A	171209	Seminole	10 N-8 E-9	NESWSW	3482
44.92	370 Northeast	13324344	-96.46680	35.35256	Pure Oil Co.	D REPLOGLE	N/A	171209	Seminole	10 N-8 E-9	SWNWSE	3423
44.93	257 West	13323440	-96.47330	35.35075	Sinclair Oil Co.	MASANER BUNNER	N/A	171209	Seminole	10 N-8 E-9	NESWSW	3499
44.97	240 Northeast	13322574	-96.46790	35.35160	Salmon Corp.	BAKER	N/A	171209	Seminole	10 N-8 E-9	NESESW	3413
44.97	65 West	13322348	-96.47110	35.35075	Gardner Pet. Co.	BRUNER	N/A	171209	Seminole	10 N-8 E-9	NWSESW	3472
45.01	127 Northeast	13324221	-96.46890	35.35075	Gardner Pet. Co.	BRUNER	N/A	171209	Seminole	10 N-8 E-9	NESESW	3456
45.05	318 West	13324332	-96.47330	35.34894	Sinclair Oil Co.	MASANER	N/A	171209	Seminole	10 N-8 E-9	SESWSW	3486
45.09	125 West	13301139	-96.47110	35.34894	Gardner Pet. Co.	BRUNER KIKER	N/A	171209	Seminole	10 N-8 E-9	SWSESW	3473
45.12	68 Northeast	13311665	-96.46890	35.34894	Gardner Pet. Co.	KIKER	N/A	171209	Seminole	10 N-8 E-9	SESESW	3480
45.14	257 Northeast	06330028	-96.46680	35.34915	Sessions Oil Co.	MID-CROMWELL UNIT	N/A	171209	Seminole	10 N-8 E-9	SWSE	3498
45.16	250 Northeast	06322525	-96.46680	35.34894	Pure Oil Co.	D REPLOGLE	N/A	171209	Seminole	10 N-8 E-9	SWSWSE	3566
45.19	377 West	N/A	-96.47330	35.34701	McMan Oil Co.	L I BAKER	N/A	171209	Seminole	10 N-8 E-16	NENWNW	3435
45.20	187 West	06300317	-96.47110	35.34701	Gilliland Oil Co.	SAM PROCTOR	N/A	171209	Seminole	10 N-8 E-16	NWNENW	3485
45.20	187 West	06320358	-96.47110	35.34701	Superior Oil Corp.	BAKER	N/A	171209	Seminole	10 N-8 E-16	NWNENW	3465
45.25	10 Southwest	N/A	-96.46880	35.34701	Superior Oil Corp.	BAKER	N/A	171209	Seminole	10 N-8 E-16	NENENW	3445
45.26	151 Southwest	N/A	-96.46990	35.34610	Elson Oil Co.	BAKER	N/A	171209	Seminole	10 N-8 E-16	CTNENW	3472
45.28	291 Southwest	N/A	-96.47110	35.34520	Superior Oil Corp.	L BAKER	N/A	171209	Seminole	10 N-8 E-16	SWNENW	3420
45.32	143 Northeast	06301707	-96.46680	35.34701	Gilliland Oil Co.	SAM PROCTOR	N/A	171209	Seminole	10 N-8 E-16	NWNWNE	3507
45.32	143 Northeast	06321251	-96.46680	35.34701	Gilliland Oil Co.	SAM PROCTOR	N/A	171209	Seminole	10 N-8 E-16	NWNWNE	3458
45.33	350 Southwest	06322385	-96.47110	35.34430	R.B. Patterson	FORE	N/A	171209	Seminole	10 N-8 E-16	WHEHNW	3471
45.35	127 Southwest	06302106	-96.46880	35.34520	R.B. Patterson	FORE	N/A	171209	Seminole	10 N-8 E-16	SENENW	3481
45.35	127 Southwest	N/A	-96.46880	35.34520	Cromwell Oil Co.	RUBY HALL	N/A	171209	Seminole	10 N-8 E-16	SENENW	3520
45.35	127 Southwest	06302107	-96.46880	35.34520	Superior Oil Corp.	BAKER	N/A	171209	Seminole	10 N-8 E-16	SENENW	3491
45.42	27 Northeast	06302110	-96.46680	35.34520	Gilliland Oil Co.	PROCTOR	N/A	171209	Seminole	10 N-8 E-16	SWNWNE	3540
45.47	206 Northeast	06302113	-96.46450	35.34520	Livingston Oil Corp.	PROCTOR	N/A	171209	Seminole	10 N-8 E-16	SENWNE	3532
45.47	18 West	N/A	-96.46680	35.34430	Elson Oil Co.	PROCTOR	N/A	171209	Seminole	10 N-8 E-16	WHWHNE	3512
45.49	231 West	N/A	-96.46880	35.34339	Carter Oil Co.	L ROBERTS	N/A	171209	Seminole	10 N-8 E-16	NESENW	3505

45.49	231 West	N/A	-96.46880	35.34339	Exxon Corp.	L ROBERTS	N/A	171209	Seminole	10 N-8 E-16	NESENW	3505
45.49	231 West	06301931	-96.46880	35.34339	Cook Oil Co.	L ROBERTS	N/A	171209	Seminole	10 N-8 E-16	NESENW	3505
45.51	394 Northeast	06301928	-96.46230	35.34520	Carter Oil Co.	RUBY HALL	N/A	171209	Seminole	10 N-8 E-16	SWNENE	3508
45.51	394 Northeast	06301922	-96.46230	35.34520	Carter Oil Co.	RUBY HALL	N/A	171209	Seminole	10 N-8 E-16	SWNENE	3523
45.53	55 West	06301921	-96.46680	35.34339	Gilliland Oil Co.	SAM PROCTOR	N/A	171209	Seminole	10 N-8 E-16	NWSWNE	3514
45.58	133 Northeast	06301914	-96.46450	35.34339	Gilliland Oil Co.	SAM PROCTOR	N/A	171209	Seminole	10 N-8 E-16	NESWNE	3507
45.61	304 West	06301919	-96.46880	35.34159	Carter Oil Co.	L ROBERTS	N/A	171209	Seminole	10 N-8 E-16	SESENW	3526
45.63	321 Northeast	06321196	-96.46230	35.34339	Hoffer Oil Corp.	BOB BERRY	N/A	171209	Seminole	10 N-8 E-16	NWSENE	3463
45.65	128 West	06301909	-96.46680	35.34159	Gilliland Oil Co.	PROCTOR	N/A	171209	Seminole	10 N-8 E-16	SWSWNE	3560
45.69	45 Northeast	06301920	-96.46470	35.34159	Elson Oil Co.	PROCTOR	N/A	171209	Seminole	10 N-8 E-16	SESWNE	3578
45.70	59 Northeast	06301910	-96.46450	35.34159	Gilliland Oil Co.	PROCTOR	N/A	171209	Seminole	10 N-8 E-16	SESWNE	3594
45.70	59 Northeast	06301911	-96.46450	35.34159	Gilliland Oil Co.	PROCTOR	N/A	171209	Seminole	10 N-8 E-16	SESWNE	3594
45.72	378 West	06321776	-96.46880	35.33978	Waite Phillips Co.	STELLA PROCTOR	N/A	171209	Seminole	10 N-8 E-16	NENESW	3527
45.75	246 Northeast	06301941	-96.46230	35.34159	Hoffer Oil Corp.	BOB BERRY	N/A	171209	Seminole	10 N-8 E-16	SWSENE	3502
45.76	204 West	06301940	-96.46680	35.33978	Amerada Pet. Corp.	C BRUNER	N/A	171209	Seminole	10 N-8 E-16	NWNWSE	3572
45.81	20 West	06301939	-96.46450	35.33978	Amerada Pet. Corp.	CAROLINA BRUNER	N/A	171209	Seminole	10 N-8 E-16	NENWSE	3585
45.82	245 West	06301938	-96.46680	35.33888	Lubell Oil Co.	AMERADA	N/A	171209	Seminole	10 N-8 E-16	WHNWSE	1990
45.82	245 West	06301937	-96.46680	35.33888	Amerada Pet. Corp.	C BRUNER	N/A	171209	Seminole	10 N-8 E-16	WHNWSE	3565
45.86	163 Northeast	06301935	-96.46230	35.33978	Amerada Pet. Corp.	CAROLINE BRUNER	N/A	171209	Seminole	10 N-8 E-16	NWNESE	3560
45.86	163 Northeast	06320308	-96.46230	35.33978	Waite Phillips Co.	STELLA PROCTOR	N/A	171209	Seminole	10 N-8 E-16	NWNESE	3516
45.87	287 West	06302071	-96.46680	35.33797	Amerada Pet. Corp.	CAROLINE BRUNER	N/A	171209	Seminole	10 N-8 E-16	SWNWSE	3552
45.91	359 Northeast	N/A	-96.46000	35.33986	Amerada Pet. Corp.	CAROLINE BRUNER	N/A	171209	Seminole	10 N-8 E-16	NENESE	3559
45.91	359 Northeast	N/A	-96.46000	35.33986	Amerada Pet. Corp.	CAROLINE BRUNER	N/A	171209	Seminole	10 N-8 E-16	NENESE	3526
45.92	103 West	06330072	-96.46450	35.33797	Amerada Pet. Corp.	C BRUNER	N/A	171209	Seminole	10 N-8 E-16	SENWSE	3573
45.98	81 Northeast	06320359	-96.46230	35.33797	Amerada Pet. Corp.	CAROLINA BRUNER	N/A	171209	Seminole	10 N-8 E-16	SWNESE	3611
45.98	132 Northeast	06320777	-96.46180	35.33807	Altex Res. Inc.	HODGES	N/A	171209	Seminole	10 N-8 E-16	SWNESE	4332
45.99	369 West	06322229	-96.46680	35.33617	Gypsy Oil Co.	HALE-BRUNER	N/A	171209	Seminole	10 N-8 E-16	NWSWSE	3557
46.02	268 Northeast	06322357	-96.46010	35.33804	Amerada Pet. Corp.	CAROLINE BRUNER	N/A	171209	Seminole	10 N-8 E-16	SENESE	3558
46.03	265 Northeast	06321132	-96.46010	35.33797	Amerada Pet. Corp.	C BRUNER	N/A	171209	Seminole	10 N-8 E-16	SENESE	1060

46.04	185 West	N/A	-96.46450	35.33617	Gypsy Oil Co.	HALE-BRUNER	N/A	171209	Seminole	10 N-8 E-16	NESWSE	3571
46.04	236 West	N/A	-96.46500	35.33592	Home-Stake Prod. Co.	HALE BRUNER	N/A	171209	Seminole	10 N-8 E-16	SWSE	3619
46.14	183 Northeast	N/A	-96.46010	35.33617	Gypsy Oil Co.	HALE BRUNER	N/A	171209	Seminole	10 N-8 E-16	NESESE	3566
46.15	266 Southwest	N/A	-96.46450	35.33436	Gypsy Oil Co.	HALE BRUNER	N/A	171209	Seminole	10 N-8 E-16	SESWSE	3570
46.19	368 Northeast	N/A	-96.45790	35.33617	H.F. Wilcox Oil	PEARLY BRUNER	N/A	171209	Seminole	10 N-8 E-15	NWSWSW	3550
46.20	143 Northeast	06302173	-96.46010	35.33526	Tripower Res. Inc.	BAILEY	N/A	171209	Seminole	10 N-8 E-16	CTEHSESE	3645
46.20	81 West	N/A	-96.46230	35.33436	Gypsy Oil Co.	HALE-BRUNER	N/A	171209	Seminole	10 N-8 E-16	SWSESE	3552
46.25	280 West	N/A	-96.46400	35.33301	Home-Stake Prod. Co.	MANDY HARJO A	N/A	171209	Seminole	10 N-8 E-21	NE	3595
46.25	104 Northeast	N/A	-96.46010	35.33436	Gypsy Oil Co.	HALE BRUNER	N/A	171209	Seminole	10 N-8 E-16	SESESE	3537
46.26	340 Southwest	N/A	-96.46450	35.33260	Independent Oil Co.	H HARJO	N/A	171209	Seminole	10 N-8 E-21	NENWNE	3557
46.30	342 Northeast	N/A	-96.45740	35.33462	Home-Stake Prod. Co.	P BRUNER	N/A	171209	Seminole	10 N-8 E-15	SW	3540
46.30	287 Northeast	N/A	-96.45790	35.33436	H.F. Wilcox Oil	PEARLY BRUNER	N/A	171209	Seminole	10 N-8 E-15	SWSWSW	3479
46.32	155 West	N/A	-96.46230	35.33260	Tidal Oil Co.	H HARJO	N/A	171209	Seminole	10 N-8 E-21	NWNENE	3522
46.35	101 Northeast	N/A	-96.45950	35.33307	Home-Stake Prod. Co.	MANDY HARJO A	N/A	171209	Seminole	10 N-8 E-21	NE	3548
46.35	330 West	N/A	-96.46380	35.33148	Tripower Res. Inc.	DOUGLAS	N/A	171209	Seminole	10 N-8 E-21	NESENWNE	3700
46.36	33 Northeast	N/A	-96.46010	35.33267	Cosden Oil Co.	GRANVILLE SIMON	N/A	171209	Seminole	10 N-8 E-21	NENENE	3314
46.37	30 Northeast	N/A	-96.46010	35.33260	Claybrook Drlg. Co.	HARJO	N/A	171209	Seminole	10 N-8 E-21	NENENE	3387
46.37	30 Northeast	N/A	-96.46010	35.33260	Tidal Oil Co.	H HARJO	N/A	171209	Seminole	10 N-8 E-21	NENENE	3760
46.37	30 Northeast	N/A	-96.46010	35.33260	B.C. Wilson	HARJO	N/A	171209	Seminole	10 N-8 E-21	NENENE	3387
46.39	140 West	N/A	-96.46170	35.33172	Home-Stake Prod. Co.	MANDY HARJO A	N/A	171209	Seminole	10 N-8 E-21	NE	3505
46.40	102 Southwest	N/A	-96.46120	35.33170	Tripower Res. Inc.	DOUGLAS	N/A	171209	Seminole	10 N-8 E-21	CTNENE	3650
46.42	363 Southwest	N/A	-96.46340	35.33005	Home-Stake Prod. Co.	MANDY HARJO A	N/A	171209	Seminole	10 N-8 E-21	NE	3600
46.42	235 Southwest	N/A	-96.46230	35.33079	Tidal Oil Co.	H HARJO	N/A	171209	Seminole	10 N-8 E-21	SWNENE	3571
46.42	167 Southwest	N/A	-96.46150	35.33090	Altex Res. Inc.	DOUGLAS	N/A	171209	Seminole	10 N-8 E-21	NESWNENE	4306
46.42	167 Southwest	N/A	-96.46150	35.33090	Tripower Res. Inc.	DOUGLAS	N/A	171209	Seminole	10 N-8 E-21	NESWNENE	4306
46.44	367 Southwest	N/A	-96.46230	35.32899	Claybrook Drlg. Co.	ROMAN	N/A	171209	Seminole	10 N-8 E-21	NWSENE	3589
46.44	367 Southwest	N/A	-96.46230	35.32899	Claybrook Drlg. Co.	ROMAN	N/A	171209	Seminole	10 N-8 E-21	NWSENE	3589
46.44	367	06321318	-96.46230	35.32899	Tidal Oil Co.	H HARJO	N/A	171209	Seminole	10 N-8 E-21	NWSENE	3243

	Southwest											
46.44	367 Southwest	06321207	-96.46230	35.32899	Claybrook Drlg. Co.	ROMAN	N/A	171209	Seminole	10 N-8 E-21	NWSENE	3589
46.44	277 Southwest	06321248	-96.46120	35.32934	Tripower Res. Inc.	DOUGLAS	N/A	171209	Seminole	10 N-8 E-21	NHNHSENE	3609
46.45	87 Southwest	06321271	-96.46010	35.33079	Tidal Oil Co.	H HARJO	N/A	171209	Seminole	10 N-8 E-21	SENENE	3486
46.50	126 South	06321234	-96.45930	35.33016	Home-Stake Prod. Co.	MANDY HARJO A	N/A	171209	Seminole	10 N-8 E-21	SENENE	3503
46.51	177 North	06321286	-96.45790	35.33267	Shaffer Oil Co.	W YAHOLA	N/A	171209	Seminole	10 N-8 E-22	NWNWNW	3504
46.53	392 Northeast	06321261	-96.45670	35.33436	Montgomery Expl. Co.	EAGLE	N/A	171209	Seminole	10 N-8 E-15	WHSESWSW	3607
46.53	392 Northeast	06321746	-96.45670	35.33436	Tripower Res. Inc.	EAGLE	N/A	171209	Seminole	10 N-8 E-15	WHSESWSW	0
46.53	179 Northeast	06321337	-96.45740	35.33254	Montgomery Expl. Co.	WOLFE	N/A	171209	Seminole	10 N-8 E-22	SENWNWNW	3590
46.55	283 Northeast	06321277	-96.45570	35.33267	Shaffer Oil Co.	W YAHOLA	N/A	171209	Seminole	10 N-8 E-22	NENWNW	3456
46.56	1 Northeast	06321275	-96.45790	35.33086	Shaffer Oil Co.	YAHOLA	N/A	171209	Seminole	10 N-8 E-22	SWNWNW	3425
46.56	1 Northeast	N/A	-96.45790	35.33086	Shaffer Oil Co.	W YAHOLA	N/A	171209	Seminole	10 N-8 E-22	SWNWNW	3485
46.58	196 Northeast	N/A	-96.45570	35.33086	Shaffer Oil Co.	YAHOLA	N/A	171209	Seminole	10 N-8 E-22	SENWNW	3480
46.59	395 Northeast	N/A	-96.45350	35.33086	Shaffer Oil Co.	YAHOLA	N/A	171209	Seminole	10 N-8 E-22	SWNENW	3486
46.68	300 West	N/A	-96.46090	35.32833	Home-Stake Prod. Co.	MANDY HARJO B	N/A	171209	Seminole	10 N-8 E-21	NE	3530
46.68	208 West	N/A	-96.46010	35.32899	Tidal Oil Co.	H HARJO	N/A	171209	Seminole	10 N-8 E-21	NESENE	3463
46.68	19 West	N/A	-96.45800	35.32913	McMan Oil Co.	M E HOLMES	N/A	171209	Seminole	10 N-8 E-22	NWSWNW	3443
46.70	293 Southwest	N/A	-96.46010	35.32710	Tidal Oil Co.	H HARJO	N/A	171209	Seminole	10 N-8 E-21	SESENE	3477
46.74	107 Northeast	N/A	-96.45640	35.32913	Tripower Res. Inc.	JACQUE	N/A	171209	Seminole	10 N-8 E-22	NWNESWNW	3594
46.77	159 Northeast	N/A	-96.45560	35.32913	McMan Oil Co.	M E HOLMES	N/A	171209	Seminole	10 N-8 E-22	NESWNW	3436
46.77	151 Southwest	N/A	-96.45800	35.32716	McMan Oil Co.	M E HOLMES	N/A	171209	Seminole	10 N-8 E-22	SWSWNW	3453
46.78	105 Southwest	N/A	-96.45730	35.32725	Bradley & Holmes	HOLMES	N/A	171209	Seminole	10 N-8 E-22	CTSHSWNW	1799
46.82	2 Southwest	N/A	-96.45620	35.32763	Home-Stake Prod. Co.	HOLMES	N/A	171209	Seminole	10 N-8 E-22	SESWNW	3500
46.85	283 Northeast	N/A	-96.45350	35.32905	Cosden Oil Co.	WILSON KING	N/A	171209	Seminole	10 N-8 E-22	NWSENW	3461
46.86	286 Southwest	N/A	-96.45790	35.32544	Savoy Oil Co.	L DEER	N/A	171209	Seminole	10 N-8 E-22	NWNWSW	3470
46.87	12 Southwest	06322215	-96.45560	35.32703	McMan Oil Co.	M E HOLMES	N/A	171209	Seminole	10 N-8 E-22	SESWNW	3456
46.94	148 Northeast	06322491	-96.45350	35.32725	Cosden Oil Co.	WILSON KING	N/A	171209	Seminole	10 N-8 E-22	SWSENW	3451
46.95	269 Northeast	06300422	-96.45240	35.32788	Home-Stake Prod. Co.	HOLMES UNIT	N/A	171209	Seminole	10 N-8 E-22	SENW	3485
46.97	118	06300077	-96.45550	35.32555	Casco Prod. Inc.	ALLENSWORTH	N/A	171209	Seminole	10 N-8 E-22	NENWSW	0

	Southwest											
46.98	134 West	N/A	-96.45570	35.32544	Savoy Oil Co.	LINDA DEER	N/A	171209	Seminole	10 N-8 E-22	NENWSW	3462
47.01	267 West	06300670	-96.45680	35.32454	R.G. Beach	DEER	N/A	171209	Seminole	10 N-8 E-22	CTNWSW	3457
47.07	221 Southwest	06320709	-96.45570	35.32363	Savoy Oil Co.	L DEER	N/A	171209	Seminole	10 N-8 E-22	SENWSW	3542
47.14	36 West	06320558	-96.45350	35.32363	Carter Oil Co.	L YAHOLA	N/A	171209	Seminole	10 N-8 E-22	SWNESW	1510
47.20	156 Northeast	06320784	-96.45130	35.32363	H.O. Helvie	L YAHOLA	N/A	171209	Seminole	10 N-8 E-22	NWNESW	3449
47.93	162 East	06320185	-96.44900	35.31275	R. Maguire	MAXEY ARAHLOKOCHE	N/A	N/A	Seminole	10 N-8 E-27	SWSWNE	4495
48.56	318 West	06300406	-96.45340	35.30364	Simpson-Fell Oil Co.	REPLOGLE	N/A	171302	Seminole	10 N-8 E-34	NWNENW	3555
49.06	81 East	06300202	-96.44900	35.29642	Hall & Troup-Moore	ALDRIDGE	N/A	N/A	Seminole	10 N-8 E-34	NWNWSE	3301
49.22	299 East	06302208	-96.44660	35.29416	Sentinel Pet. Inc.	WADKINS	N/A	N/A	Seminole	10 N-8 E-34	SESENWSE	2069
49.22	299 East	N/A	-96.44660	35.29416	Sentinel Pet. Inc.	WADKINS	N/A	N/A	Seminole	10 N-8 E-34	SESENWSE	2069
49.35	16 Northeast	N/A	-96.44960	35.29235	Sentinel Pet. Inc.	PERKINS	N/A	N/A	Seminole	10 N-8 E-34	NWSWSE	2087
49.35	16 Northeast	N/A	-96.44960	35.29235	Sentinel Pet. Inc.	PERKINS	N/A	N/A	Seminole	10 N-8 E-34	NWSWSE	2087
49.38	166 East	N/A	-96.44790	35.29190	Sentinel Pet. Inc.	PERKINS	N/A	N/A	Seminole	10 N-8 E-34	SWSE	4230
49.47	80 West	06320898	-96.45070	35.29054	Sentinel Pet. Inc.	DEER	N/A	N/A	Seminole	10 N-8 E-34	SESESESW	2079
49.54	158 West	06321009	-96.45150	35.28949	Agate Pet. Inc.	LISA	N/A	N/A	Seminole	9 N-8 E-3	NENENW	2066
49.54	24 Northeast	06321209	-96.44950	35.28949	Klabzuba Royalty Co.	FOUNDATION	N/A	N/A	Seminole	9 N-8 E-3	NWNWNWNE	2100
49.58	272 Northeast	06321975	-96.44670	35.28904	Little River En. Co.	PERKINS	N/A	N/A	Seminole	9 N-8 E-3	NENWNE	2030
49.64	198 West	06322024	-96.45180	35.28797	Sentinel Pet. Inc.	HEWGLEY	N/A	N/A	Seminole	9 N-8 E-3	EHNENW	2097
50.07	28 Northeast	N/A	-96.44890	35.28181	Wrightsman Oil Co.	BUTNER	N/A	N/A	Seminole	9 N-8 E-3	NWNWSE	3546
50.45	8 East	N/A	-96.44890	35.27639	Empire Oil	BUTNER	N/A	107538	Seminole	9 N-8 E-3	SWSWSE	3560
50.45	8 East	N/A	-96.44890	35.27639	Parkinsol Oil	SARAH	N/A	107538	Seminole	9 N-8 E-3	SWSWSE	4354
50.45	8 East	N/A	-96.44890	35.27639	Ramhead Pet. Inc.	SARAH	N/A	107538	Seminole	9 N-8 E-3	SWSWSE	4400
50.45	203 West	N/A	-96.45120	35.27639	Blackwell Oil	PORTER	N/A	107538	Seminole	9 N-8 E-3	SESESW	3381
50.57	192 West	06302225	-96.45110	35.27452	F.A. King	ABLE	N/A	107538	Seminole	9 N-8 E-10	NWNENW	3710
50.58	11 Northeast	N/A	-96.44890	35.27452	McIntyre-Sherman-Cummings	DEARMAN	N/A	107538	Seminole	9 N-8 E-10	NWNWNE	1632
50.60	259 West	N/A	-96.45180	35.27392	Texas Co.	H I BRINSFIELD	N/A	107538	Seminole	9 N-8 E-10	NENENW	4356
50.90	55 East	06303090	-96.44780	35.26996	Prarie Oil & Gas Co.	NETTIE ABEL	N/A	107538	Seminole	9 N-8 E-10	CTSWNE	4413
50.95	253 West	N/A	-96.45110	35.26910	H.L. Berkley	HARVEY ABEL	N/A	107538	Seminole	9 N-8 E-10	SESENW	3095
50.96	49 West	06303111	-96.44890	35.26910	Ramhead Pet. Inc.	REED	N/A	107538	Seminole	9 N-8 E-10	CTSWSWNE	4415

50.96	49 West	N/A	-96.44890	35.26910	Ramhead Pet. Inc.	REED	N/A	107538	Seminole	9 N-8 E-10	CTSWSWNE	4415
50.96	177 East	N/A	-96.44640	35.26910	H.L. Berkley	ABEL	N/A	107538	Seminole	9 N-8 E-10	SESWNE	4400
50.96	177 East	N/A	-96.44640	35.26910	H.L. Berkley	ABEL	N/A	107538	Seminole	9 N-8 E-10	SESWNE	0
51.08	259 West	N/A	-96.45110	35.26729	W.A. Delaney Jr.	ABEL	N/A	107538	Seminole	9 N-8 E-10	NENESW	3045
51.08	259 West	N/A	-96.45110	35.26729	Ramhead Pet. Inc.	RICHARD	N/A	107538	Seminole	9 N-8 E-10	CTNENESW	4405
51.08	259 West	N/A	-96.45110	35.26729	Ramhead Pet. Inc.	RICHARD	N/A	107538	Seminole	9 N-8 E-10	CTNENESW	4405
51.08	56 West	06320346	-96.44890	35.26729	Ramhead Pet. Inc.	TRECIA	N/A	107538	Seminole	9 N-8 E-10	CTNWNWSE	4394
51.09	347 East	06320944	-96.44450	35.26729	Scorpio Pet. Inc.	WISE	N/A	107538	Seminole	9 N-8 E-10	NWNESE	4440
51.22	336 Northeast	06320346	-96.44450	35.26549	Christie-Steward Drlg. Co.	RUTHERFORD	N/A	107538	Seminole	9 N-8 E-10	SWNESE	1915
51.34	326 Northeast	06321849	-96.44450	35.26368	Ramhead Pet. Inc.	CHAMBERS	N/A	N/A	Seminole	9 N-8 E-10	NWSESE	4400
51.60	300 West	06321971	-96.45120	35.25989	Prarie Oil Co.	MINNIE POLK	N/A	N/A	Seminole	9 N-8 E-15	NENENW	4577
51.68	188 East	06330144	-96.44580	35.25854	Cook Brothers	BELFORD	N/A	107538	Seminole	9 N-8 E-15	SENWNE	1627
51.71	200 East	N/A	-96.44570	35.25822	Sands Ind. Inc.	BELFORD-ABELS	N/A	107538	Seminole	9 N-8 E-15	SENWNE	1640
51.84	124 East	06321705	-96.44660	35.25627	Strickland & Owens	STEPHENS	N/A	107538	Seminole	9 N-8 E-15	NESWNE	1625
51.84	124 East	06322564	-96.44660	35.25627	H.H. Bevelhymer	STEPHENS	N/A	107538	Seminole	9 N-8 E-15	NESWNE	0
52.10	283 West	06321256	-96.45120	35.25266	Ind. Oil & Gas Co.	D AHAISSE	N/A	N/A	Seminole	9 N-8 E-15	NENESW	3619
52.47	380 West	06322581	-96.45240	35.24722	Texakoma Oil Corp.	TEXAKOMA-BUTNER	N/A	N/A	Seminole	9 N-8 E-15	SESWSESW	4341
52.59	26 West	06322631	-96.44860	35.24545	Texakoma Oil Corp.	TEXAKOMA-STAFFORD	N/A	N/A	Seminole	9 N-8 E-22	EHNWNWNE	4393
52.72	260 West	06322621	-96.45120	35.24355	McIntyre-Sherman-Cummings	OKEY	N/A	059059	Seminole	9 N-8 E-22	SENENW	4370
52.97	166 East	06320489	-96.44660	35.23994	Mid-Cont. Pet. Corp.	J C OKEY	N/A	N/A	Seminole	9 N-8 E-22	SESWNE	3540
53.34	382 East	06302173	-96.44440	35.23452	Garland Merrell Jr.	STAFFORD	N/A	N/A	Seminole	9 N-8 E-22	NWSESE	4288
53.47	187 West	06320185	-96.45070	35.23271	Jarvis & Holm Inc.	EMMA WILLIAMS	N/A	N/A	Seminole	9 N-8 E-22	SESESW	4412
53.47	230 West	06320346	-96.45120	35.23271	Jarvis & Holm Inc.	E WILLIAMS	N/A	N/A	Seminole	9 N-8 E-22	SESESW	3035
53.47	230 West	06300406	-96.45120	35.23271	Jarvis & Holm Inc.	E WILLIAMS	N/A	N/A	Seminole	9 N-8 E-22	SESESW	560
54.09	180 East	06303090	-96.44670	35.22368	H. Alexander	ROGERS	N/A	N/A	Seminole	9 N-8 E-27	NENWSE	3927
54.47	22 West	06302225	-96.44890	35.21826	Gomaco Inc.	ROGERS	N/A	N/A	Seminole	9 N-8 E-27	CTSWSWSE	4478
54.47	22 West	06323120	-96.44890	35.21826	Hill Oil Co. Inc.	ROGERS	N/A	N/A	Seminole	9 N-8 E-27	CTSWSWSE	4478
54.60	179 East	N/A	-96.44670	35.21639	Pasquella & Lane	THELMA JOHNSON	N/A	761796	Seminole	9 N-8 E-34	NENWNE	4429
54.60	179 East	N/A	-96.44670	35.21639	Landers & Musgrove	DAVIS-JOHNSON-FORESEE	N/A	761796	Seminole	9 N-8 E-34	NENWNE	0

54.85	377 East	N/A	-96.44450	35.21277	Hill Oil Co. Inc.	FLINT	N/A	761796	Seminole	9 N-8 E-34	NWSENE	4372
55.10	368 Northeast	06323199	-96.44450	35.20916	United TX Pet. Inc.	BLUEBONNET	N/A	N/A	Seminole	9 N-8 E-34	NWNESE	4400
55.34	52 West	06301561	-96.44890	35.20555	Globe Oil & Ref. Co.	CHUPCO	N/A	N/A	Seminole	9 N-8 E-34	NWSWSE	3443
55.83	296 West	06301914	-96.45120	35.19837	Byrd Oil Corp.	LOUIS BENDEN	N/A	761796	Seminole	8 N-8 E-3	NESENW	3439
55.84	117 Northeast	06321337	-96.44670	35.19837	VanDeventer	HARROD	N/A	N/A	Seminole	8 N-8 E-3	NESWNE	0
55.96	305 West	06323229	-96.45120	35.19656	Hemstead Oil Corp.	HARPER	N/A	761796	Seminole	8 N-8 E-3	SESENW	4430
55.96	93 West	06323478	-96.44890	35.19656	Maradun Oil Co.	HARROD	N/A	N/A	Seminole	8 N-8 E-3	SWSWNE	3457
56.09	101 West	06300928	-96.44890	35.19476	VanDeventer	BAXTER	N/A	N/A	Seminole	8 N-8 E-3	NWNWSE	0
56.90	201 West	N/A	-96.44850	35.18290	KWB Oil Prop. Mgmt. Inc.	SAYRE	N/A	N/A	Seminole	8 N-8 E-10	CTSWNE	3490
57.08	272 West	N/A	-96.44880	35.18019	R. Olsen Oil Co.	B F DAVIS	N/A	N/A	Seminole	8 N-8 E-10	NWNWSE	4325
57.24	97 Northeast	06300925	-96.44440	35.17838	J.A. Ligon & Sons Oil Co.	DAVIS	N/A	N/A	Seminole	8 N-8 E-10	SWNESE	3448
57.61	265 Northeast	06300924	-96.44180	35.17302	J.A. Ligon & Sons Oil Co.	CHUPCO	N/A	N/A	Seminole	8 N-8 E-15	NENENE	4399
58.10	89 West	06300925	-96.44440	35.16571	T. Thompson et al	SAMOCHE	N/A	761920	Seminole	8 N-8 E-15	NWNESE	4094
58.37	159 West	N/A	-96.44440	35.16209	Jordan Pet. Co.	CHAMBLEE	N/A	N/A	Seminole	8 N-8 E-15	NWSESE	4270
58.37	159 West	N/A	-96.44440	35.16209	O.H. Rives	CHAMBLEE	N/A	N/A	Seminole	8 N-8 E-15	NWSESE	2317
58.50	354 West	06300808	-96.44660	35.16029	Keener Oil Co.	CHESSER	N/A	761920	Seminole	8 N-8 E-15	SESWSE	3410
58.86	183 West	N/A	-96.44440	35.15486	Magnolia Petroleum Co.	W K HOLIWELL	N/A	N/A	Seminole	8 N-8 E-22	NWSENE	4221
58.98	395 West	06304489	-96.44660	35.15305	Pet. Res. Co.	SMART	N/A	N/A	Seminole	8 N-8 E-22	SESWNE	4300
59.30	232 Northeast	N/A	-96.43780	35.14944	B. Ligon Drlg. Co.	FGM	N/A	356905	Hughes	8 N-8 E-23	SENWSW	4215
59.30	232 Northeast	06320185	-96.43780	35.14944	Farmers En. Grp.	F G M	N/A	356905	Hughes	8 N-8 E-23	SENWSW	0
59.30	232 Northeast	02920294	-96.43780	35.14944	L.J. Milne	F G M	N/A	356905	Hughes	8 N-8 E-23	SENWSW	4215
59.50	193 West	02900106	-96.44220	35.14582	Prarie Oil Co.	AMY GARMAN	N/A	N/A	Seminole	8 N-8 E-22	SESESE	3575
59.64	56 West	02900219	-96.44010	35.14393	C.C. Nye	GODFREY	N/A	761827	Hughes	8 N-8 E-26	NWNWNW	3304
59.71	18 Northeast	02920025	-96.43900	35.14303	A. Gutowsky	GODFREY	N/A	761827	Hughes	8 N-8 E-26	NWNW	4329
59.71	18 Northeast	02930002	-96.43900	35.14303	C.C. Nye	GUTOWSKY-GODFREY	N/A	761827	Hughes	8 N-8 E-26	NWNW	0
59.88	152 West	02900136	-96.44010	35.14032	C.C. Nye	GODFREY B	N/A	761827	Hughes	8 N-8 E-26	NWSWNW	3275
59.97	385 West	02900159	-96.44220	35.13851	C.C. Nye	GIDNEY	N/A	761827	Seminole	8 N-8 E-27	SESENE	3246
60.00	200 West	02900261	-96.44010	35.13851	C.C. Nye	GODFREY	N/A	761827	Hughes	8 N-8 E-26	SWSWNW	3261
60.15	250 West	ZZ005635	-96.44010	35.13671	O.H. Rives	MCADAMS	N/A	761827	Hughes	8 N-8 E-26	NWNWSW	3300
60.15	251 West	02900262	-96.44010	35.13665	C.C. Nye	MUNSON	N/A	761827	Hughes	8 N-8 E-26	NWNWSW	3267
60.17	151 Northeast	02920002	-96.43570	35.13671	O.H. Rives	MCADAMS	N/A	761827	Hughes	8 N-8 E-26	NWNESW	3350
60.28	65 West	02920008	-96.43790	35.13490	B.B. Blair	MUNSON	N/A	761827	Hughes	8 N-8 E-26	SENWSW	3231

60.30	336 Northeast	02920003	-96.43350	35.13487	Cottonwood Pet. Co.	ROGERS	N/A	N/A	Hughes	8 N-8 E-26	SENESW	4268
60.36	353 Southeast	02900247	-96.43410	35.13264	Lynan En. Inc.	MKB	N/A	761827	Hughes	8 N-8 E-26	NESESW	3150
60.42	236 Southeast	02900267	-96.43570	35.13219	Lynan En. Inc.	MKB	N/A	761827	Hughes	8 N-8 E-26	WHSESW	4331
60.48	156 Northwest	02920327	-96.44010	35.13309	Jergens Oil Co.	TOCHE LOWE	N/A	761827	Hughes	8 N-8 E-26	NWSWSW	4208
60.48	156 Northwest	02920100	-96.44010	35.13309	O.H. Rives	LOWE	N/A	761827	Hughes	8 N-8 E-26	NWSWSW	3379
60.56	131 West	02920328	-96.44010	35.13128	O.H. Rives	KEESEE	N/A	761827	Hughes	8 N-8 E-26	SWSWSW	3397
60.69	76 East	02900159	-96.43810	35.12931	Gomaco Inc.	MUDD	N/A	761827	Hughes	8 N-8 E-35	NENWNW	4281
60.69	76 East	02900159	-96.43810	35.12931	O.H. Rives	MUDD	N/A	761827	Hughes	8 N-8 E-35	NENWNW	3400
60.69	76 East	02900261	-96.43810	35.12931	O.H. Rives	MUDD	N/A	761827	Hughes	8 N-8 E-35	NENWNW	0
60.69	125 West	02900219	-96.44030	35.12931	O.H. Rives	MUDD	N/A	761827	Hughes	8 N-8 E-35	NWNWNW	3400
60.73	318 West	02900219	-96.44230	35.12842	J. Scott Drlg. Co. Inc.	PAR RIVES	N/A	761827	Seminole	8 N-8 E-34	EHNENE	4204
60.83	54 Northeast	N/A	-96.43810	35.12750	J.W. McCulloch	C JEFFERSON	N/A	761827	Hughes	8 N-8 E-35	CTSENWNW	3242
60.85	253 Northeast	02900248	-96.43580	35.12750	Roxana Pet. Corp	C BULLING	N/A	761827	Hughes	8 N-8 E-35	CTSWNENW	3223
60.85	253 Northeast	02900248	-96.43580	35.12750	Roxana Pet. Corp	C BULLING	N/A	761827	Hughes	8 N-8 E-35	CTSWNENW	3334
60.90	137 Northeast	02900248	-96.43690	35.12660	Gypsy Oil Co.	MAHALA PROCTOR	N/A	761827	Hughes	8 N-8 E-35	CTNW	3268
60.95	22 Northeast	ZZ005635	-96.43810	35.12569	Gypsy Oil Co.	E JEFFERSON	N/A	761827	Hughes	8 N-8 E-35	CTNESWNW	3226
60.95	22 Northeast	02900267	-96.43810	35.12569	Gypsy Oil Co.	C JEFFERSON	N/A	761827	Hughes	8 N-8 E-35	CTNESWNW	4212
60.97	221 Northeast	02900267	-96.43580	35.12569	Independent Oil Co.	G JEFFERSON	N/A	761827	Hughes	8 N-8 E-35	NWSENW	3226
61.03	205 Northeast	02900247	-96.43580	35.12479	Wasson Oil Co.	BULLING	N/A	761827	Hughes	8 N-8 E-35	CTWHSENW	2037
61.07	9 West	02920339	-96.43810	35.12389	Gypsy Oil Co.	C JEFFERSON	N/A	761827	Hughes	8 N-8 E-35	CTSHNW	3263
61.09	190 Northeast	02920327	-96.43580	35.12389	Independent Oil Co.	GEO JEFFERSON	N/A	761827	Hughes	8 N-8 E-35	SWSENW	3222
61.09	190 Northeast	02920398	-96.43580	35.12389	Jennings & Clogg	BULLING	N/A	761827	Hughes	8 N-8 E-35	SWSENW	1041
61.09	190 Northeast	02920361	-96.43580	35.12389	Independent Oil Co.	GEORGE JEFFERSON	N/A	761827	Hughes	8 N-8 E-35	SWSENW	3277
61.10	393 Northeast	02920416	-96.43360	35.12411	Midstates Oil Corp.	OTTO BULLING	N/A	761827	Hughes	8 N-8 E-35	SESENW	2817
61.11	389 Northeast	02920361	-96.43360	35.12389	Independent Oil Co.	G JEFFERSON	N/A	761827	Hughes	8 N-8 E-35	SESENW	3270
61.12	388 Northeast	02920420	-96.43360	35.12382	Jennings & Clogg	BULLING	N/A	761827	Hughes	8 N-8 E-35	SESENW	2817
61.20	40 West	02900267	-96.43810	35.12208	T.F. Hodge	MUDD	N/A	N/A	Hughes	8 N-8 E-35	CTNENWSW	4366
61.21	159 Northeast	02920393	-96.43580	35.12208	Johnson & Ashe	BUELING	N/A	761827	Hughes	8 N-8 E-35	NWNESW	3210
61.23	358	02920455	-96.43360	35.12208	J.W. McCulloch	G JEFFERSON	N/A	761827	Hughes	8 N-8 E-35	NENESW	3281

	Northeast											
61.35	327 Northeast	02920422	-96.43360	35.12027	J.W. McCulloch	G JEFFERSON	N/A	761827	Hughes	8 N-8 E-35	SENESW	3290
61.48	299 Northeast	02920481	-96.43360	35.11846	W. Phillips Co.	GEO JEFFERSON	N/A	N/A	Hughes	8 N-8 E-35	NESESW	3013
61.57	117 West	02920339	-96.43810	35.11666	J.A. Flint	BULLING	N/A	N/A	Hughes	8 N-8 E-35	SESWSW	4400
61.61	335 East	02900080	-96.43310	35.11621	Signature Exp. Inc.	SERENDIPITY	N/A	N/A	Hughes	8 N-8 E-35	SESESESW	1300
61.70	324 West	02920327	-96.44030	35.11482	Lowry Expl.	MUDD	N/A	N/A	Hughes	7 N-8 E-2	CTNWNWNW	4364
61.77	278 East	02920577	-96.43360	35.11392	O.H. Rives	BULLING	N/A	N/A	Hughes	7 N-8 E-2	EHNENW	4375
61.78	155 East	02900248	-96.43500	35.11373	I.A.Wyant	BULLING	N/A	N/A	Hughes	7 N-8 E-2	NENW	4322
61.95	334 West	N/A	-96.44030	35.11121	Anderson-Prichard Oil Corp.	TATE	N/A	N/A	Hughes	7 N-8 E-2	NWSWNW	3448
61.95	69 East	N/A	-96.43580	35.11121	Lowry Expl.	HAILEY	N/A	N/A	Hughes	7 N-8 E-2	NWSENW	4422
62.01	236 West	00520056	-96.43920	35.11031	R.B. Patterson	TURNER	N/A	N/A	Hughes	7 N-8 E-2	CTSWNW	1275
62.19	261 East	00520042	-96.43360	35.10760	Jones Shelburne Inc.	PRICE	N/A	N/A	Hughes	7 N-8 E-2	NENESW	3481
62.25	382 West	00520053	-96.44080	35.10805	Trojan Oil	MIMI	N/A	N/A	Hughes	7 N-8 E-2	NWNWSW	4226
62.44	374 West	00520044	-96.44190	35.10536	Trojan Oil	KING	N/A	327363	Hughes	7 N-8 E-3	SENESE	1255
62.57	302 East	00520043	-96.43510	35.10204	Trojan Oil	MASSAD	N/A	N/A	Hughes	7 N-8 E-2	SWSESW	4445
62.72	392 Southwest	00520044	-96.44240	35.09848	Genesis Inc.	MUTCH-CHAPMAN	N/A	N/A	Hughes	7 N-8 E-10	SENENE	4520
62.72	133 West	01300321	-96.44020	35.10028	Pawnee Pet. Co.	MUTCH-HARBER	N/A	N/A	Hughes	7 N-8 E-11	NWNWNW	4500
62.72	133 West	N/A	-96.44020	35.10028	Trojan Oil	MUTCH-HARBER	N/A	N/A	Hughes	7 N-8 E-11	NWNWNW	4500
62.77	236 Southwest	N/A	-96.44020	35.09848	Pawnee Pet. Co.	MUTCH-HARBER	N/A	N/A	Hughes	7 N-8 E-11	SWNWNW	4484
62.83	205 Northeast	N/A	-96.43580	35.10028	J.A. Flint	WELCH	N/A	N/A	Hughes	7 N-8 E-11	NWNENW	3990
62.90	100 Northeast	N/A	-96.43580	35.09848	J.A. Flint	WELCH	N/A	N/A	Hughes	7 N-8 E-11	SWNENW	4423
62.98	357 West	N/A	-96.44020	35.09622	E. Miler Oil	WELCH (GEREE)	N/A	N/A	Hughes	7 N-8 E-11	NWSWNW	4390
63.07	398 West	N/A	-96.44020	35.09486	Pawnee Pet. Co.	MUTCH-HARBER	N/A	N/A	Hughes	7 N-8 E-11	SWSWNW	4430
63.10	114 Northeast	N/A	-96.43470	35.09577	Boettcher Oil Co.	SCHRAMM	N/A	327363	Hughes	7 N-8 E-11	CTSENW	2974
63.11	206 West	N/A	-96.43800	35.09478	Pawnee Pet. Co.	MUTCH-HARBER	N/A	N/A	Hughes	7 N-8 E-11	SESWNW	4495
63.22	44 West	03702836	-96.43580	35.09377	J.A. Flint	HOTSHOT	N/A	327363	Hughes	7 N-8 E-11	NWNESW	4481
63.23	259 West	03702836	-96.43800	35.09306	J.A. Flint	GREENWOOD	N/A	327363	Hughes	7 N-8 E-11	NENWSW	4467
63.27	383 West	03702838	-96.43910	35.09215	Boettcher Oil Co.	WALKER	N/A	327363	Hughes	7 N-8 E-11	CTNWSW	2927
63.34	4 Northeast	03716891	-96.43470	35.09215	Boettcher Oil Co.	WESTMOLAND	N/A	327363	Hughes	7 N-8 E-11	CTNESW	2960
63.35	334 West	03727554	-96.43820	35.09117	Lorene Oil. Co.	WALKER ESTATE	N/A	327363	Hughes	7 N-8 E-11	SENWSW	3148
63.41	392 Northeast	03702811	-96.43030	35.09215	Independent Oil Co.	S JACKSON	N/A	327363	Hughes	7 N-8 E-11	CTNWSE	3033
63.45	374 West	03702822	-96.43800	35.08944	J.A. Flint	MAJORS	N/A	327363	Hughes	7 N-8 E-11	NESWSW	4497

63.63	307 Northeast	03702812	-96.43030	35.08854	Prairie Oil Co.	SALLIE HARJO	N/A	327363	Hughes	7 N-8 E-11	CTSWSE	2983
63.64	207 West	03702813	-96.43580	35.08763	Hormann Co.	WESTMORELAND	N/A	327363	Hughes	7 N-8 E-11	SWSESW	2975
63.69	185 Northeast	03722101	-96.43140	35.08763	Independent Oil Co.	NELLIE PROCTOR	N/A	327363	Hughes	7 N-8 E-11	SWSWSE	4426
63.85	343 Northeast	03700575	-96.42920	35.08576	W.R. Ramsey	JACOBS	N/A	327363	Hughes	7 N-8 E-14	NENWNE	2932
63.85	343 Northeast	03702818	-96.42920	35.08576	W.R. Ramsey	JACOBS	N/A	327363	Hughes	7 N-8 E-14	NENWNE	3203
63.85	231 West	03702819	-96.43530	35.08440	J.B. Borden	SMITH	N/A	327363	Hughes	7 N-8 E-14	NHSWNENW	1203
63.87	134 West	03702820	-96.43420	35.08440	Corthel Pet. Corp.	DAVIS	N/A	327363	Hughes	7 N-8 E-14	SENENW	1212
63.87	331 Northeast	03702825	-96.42920	35.08531	Corthel Pet. Corp.	DAVIS	N/A	327363	Hughes	7 N-8 E-14	NENWNE	1128
63.90	97 West	03702826	-96.43360	35.08395	Garrett & Godfrey	JACOBS	N/A	327363	Hughes	7 N-8 E-14	SENENW	2480
63.91	256 West	03700576	-96.43530	35.08350	J.B. Borden	SMITH	N/A	327363	Hughes	7 N-8 E-14	SWNENW	1192
63.93	158 West	03702830	-96.43420	35.08350	O.A. Smith	DAVIS	N/A	327363	Hughes	7 N-8 E-14	SWSENENW	1217
63.97	135 Northeast	03702831	-96.43080	35.08350	Junco Oil. Co.	JOHNSON	N/A	327363	Hughes	7 N-8 E-14	SWNWNE	1130
63.98	246 Northeast	03702832	-96.42960	35.08360	Lyons Pet. Co.	JOHN JACOBS	N/A	327363	Hughes	7 N-8 E-14	SENWNE	1114
63.99	134 West	ZZ247778	-96.43360	35.08260	Junco Oil. Co.	HUFFMAN	N/A	327363	Hughes	7 N-8 E-14	NESENW	1204
64.06	159 West	03702834	-96.43360	35.08169	Junco Oil. Co.	ABBLITT	N/A	327363	Hughes	7 N-8 E-14	NESENW	1170
64.17	191 West	03720508	-96.43360	35.08034	Lewis-Clarke Pet. Co.	ED ARNOLD	N/A	327363	Hughes	7 N-8 E-14	SESENW	988
64.30	395 West	03703008	-96.43580	35.07853	Southern Oil Co.	HENRY SHAWNEGO	N/A	N/A	Hughes	7 N-8 E-14	NWNESW	1158
64.30	210 East	03703009	-96.42920	35.07853	Lewis-Clarke Pet. Co.	ARNOLD	N/A	N/A	Hughes	7 N-8 E-14	NENWSE	2660
64.36	296 West	03703009	-96.43470	35.07763	Prairie Oil Co.	HENRY SHAWNEGO	N/A	N/A	Hughes	7 N-8 E-14	CTNESW	3380
64.42	398 West	03716910	-96.43580	35.07672	Champlin Ref. Co.	BELL	N/A	N/A	Hughes	7 N-8 E-14	SWNESW	4423
64.50	148 West	03703013	-96.43310	35.07556	J.B. Borden	BUCHNER	N/A		Hughes	7 N-8 E-14	NESESW	3053
64.55	401 West	03703019	-96.43580	35.07492	Southern Oil Co.	HENRY SHAWNEGO	N/A	N/A	Hughes	7 N-8 E-14	NWSESW	1480
64.62	95 Northeast	03703019	-96.43030	35.07401	Glenco Pet. Corp.	JACK DURHAM	N/A	N/A	Hughes	7 N-8 E-14	SWSE	4495
64.68	10 West	03703020	-96.43140	35.07311	Evans & Littrell Inc.	JACK DURHAM	N/A	N/A	Hughes	7 N-8 E-14	SESWSWSE	1125
64.85	142 Northeast	03703021	-96.42980	35.07078	J.B. Borden	CURTAIN	N/A	N/A	Hughes	7 N-8 E-23	SWNENWNE	1494
64.93	91 East	03703021	-96.43030	35.06942	EL&M Drlg. Co.	CURTAIN	N/A	N/A	Hughes	7 N-8 E-23	SHNWNE	1064
64.95	47 Southeast	03726185	-96.43090	35.06897	W. Clark	WYSOR	N/A	N/A	Hughes	7 N-8 E-23	SESWNWNE	1027
65.07	365 Northwest	03703024	-96.43590	35.06942	Midwestern Oil	WIPER	N/A	327363	Hughes	7 N-8 E-23	CTSWNENW	2810
65.08	114 Northwest	03703025	-96.43360	35.06807	Sunset Oil Co.	GRAHAM	N/A	327363	Hughes	7 N-8 E-23	NESENW	1077
65.08	114	03716909	-96.43360	35.06807	L. Hunt	W R GRAHAM	N/A	327363	Hughes	7 N-8 E-23	NESENW	1068

	Northwest											
65.10	161 Northwest	03703028	-96.43430	35.06807	L.C. Jenkins	GRAHAM	N/A	327363	Hughes	7 N-8 E-23	NESENW	1055
65.11	95 Northwest	03703029	-96.43370	35.06761	Sunset Oil Co.	GRAHAM	N/A	327363	Hughes	7 N-8 E-23	NESENW	1085
65.14	264 West	03703029	-96.43590	35.06761	Magnolia Pet. Co.	W B GRAHAM	N/A	327363	Hughes	7 N-8 E-23	NWSENW	4345
65.14	264 West	03702861	-96.43590	35.06761	Midwestern Oil	GRAHAM	N/A	327363	Hughes	7 N-8 E-23	CTNWSENW	2752
65.14	201 West	03702862	-96.43530	35.06705	Sunset Oil Co.	GRAHAM	N/A	327363	Hughes	7 N-8 E-23	SWNESENW	1078
65.20	254 West		-96.43590	35.06581	Midwestern Oil	GRAHAM	N/A	327363	Hughes	7 N-8 E-23	CTSWSENW	2775
65.21	53 West	03700578	-96.43360	35.06581	C.J. Hahn	GRAHAM	N/A	327363	Hughes	7 N-8 E-23	SESENW	1108
65.21	53 West	03702865	-96.43360	35.06581	A.O. Drlg. Co.	GRAHAM	N/A	327363	Hughes	7 N-8 E-23	NWSESENW	1060
65.76	389 Southwest	03702867	-96.43810	35.05676	Q.O. Stevens et al	FIXICO	N/A	N/A	Hughes	7 N-8 E-26	NENWNW	1100
66.00	84 East	03702867	-96.43190	35.05543	B&J Prod. Co.	LILLEY LENA	N/A	N/A	Hughes	7 N-8 E-26	SWNWNE	1414
66.50	286 West	03726185	-96.43590	35.04773	Wolfe Drlg co.	PRICE	N/A	N/A	Hughes	7 N-8 E-26	SWNESW	2968
67.15	284 West	ZZ438850	-96.43470	35.03864	Mustang Prod. Co.	MOORE	N/A	N/A	Hughes	7 N-8 E-35	CTNHSENW	4813
68.33	321 West	03727554	-96.43360	35.02229	Humble Oil Co.	THOMPSON	N/A	N/A	Hughes	6 N-8 E-2	SESENW	4515
68.58	322 West	03728617	-96.43360	35.01867	Deloris Oil Co.	WALKER	N/A	327363	Hughes	6 N-8 E-2	SENESW	2816
68.58	89 East	03703029	-96.42910	35.01867	Webco Drlg. Co.	WESTERN	N/A	327363	Hughes	6 N-8 E-2	SENWSE	2782
68.58	291 East	N/A	-96.42690	35.01867	Webco Drlg. Co.	WOODFORD	N/A	327363	Hughes	6 N-8 E-2	SWNESE	2790
68.71	324 West	N/A	-96.43360	35.01687	M. Sitrin	LILLEY	N/A	327363	Hughes	6 N-8 E-2	NESESW	2737
68.71	290 East	N/A	-96.42690	35.01687	Webco Drlg. Co.	LEFTWICH	N/A	327363	Hughes	6 N-8 E-2	NWSESE	2802
68.83	87 East	N/A	-96.42910	35.01506	M. Sitrin	WESTERN	N/A	327363	Hughes	6 N-8 E-2	SESWSE	2793
68.95	277 East	N/A	-96.42690	35.01313	Altman Pet. Co.	HOWARD	N/A	327363	Hughes	6 N-8 E-11	NWNENE	2785
68.95	277 East	N/A	-96.42690	35.01313	Krumme Oil Co.	H B S U (HOWARD)	N/A	327363	Hughes	6 N-8 E-11	NWNENE	2785
68.96	77 East	N/A	-96.42920	35.01313	M. Sitrin	WHITE	N/A	327363	Hughes	6 N-8 E-11	NENWNE	2761
68.98	124 West	N/A	-96.43140	35.01313	Webco Drlg. Co.	WHITE	N/A	327363	Hughes	6 N-8 E-11	NWNWNE	2750
68.99	335 West	N/A	-96.43370	35.01313	C.W. Williams	BOTTOMS	N/A	327363	Hughes	6 N-8 E-11	NENENW	2732
69.44	341 West	N/A	-96.43370	35.00590	Iron Drlg. Co.	S M THOMPSON	N/A	327363	Hughes	6 N-8 E-11	NENESW	2703
69.45	131 West	N/A	-96.43140	35.00590	Iron Drlg. Co.	PEARL ALLEN	N/A	327363	Hughes	6 N-8 E-11	NWNWSE	2700
69.53	389 West	N/A	-96.43370	35.00409	Iron Drlg. Co.	S M THOMPSON	N/A	327363	Hughes	6 N-8 E-11	SENESW	2728
69.56	183 West	N/A	-96.43140	35.00409	Iron Drlg. Co.	PEARL ALLEN	N/A	327363	Hughes	6 N-8 E-11	SWNWSE	2721
69.64	242 Northeast	N/A	-96.42650	35.00409	B. Hall Oil Corp.	ASHLEY	N/A	327363	Hughes	6 N-8 E-11	EHSWNESE	4246
69.66	401 Northeast	N/A	-96.42470	35.00409	Day & Williams	PEARL ALLEN	N/A	327363	Hughes	6 N-8 E-11	SENESE	2722
69.68	235 West	N/A	-96.43140	35.00229	Sunray Oil. Corp.	WAKELEY	N/A	327363	Hughes	6 N-8 E-11	NWSWSE	2739
69.84	98 West	N/A	-96.42920	35.00048	Day & Williams	WAKELEY	N/A	327363	Hughes	6 N-8 E-11	SESWSE	2727

69.90	297 Northeast	N/A	-96.42470	35.00048	Day & Williams	WAKELY	N/A	327363	Hughes	6 N-8 E-11	SESESE	2671
69.99	52 Northeast	N/A	-96.42690	34.99868	Davis Bros.	PARKS B	N/A	327363	Hughes	6 N-8 E-14	NWNENE	2689
70.08	189 West	N/A	-96.42910	34.99687	Davis Bros.	PARKS B	N/A	327363	Hughes	6 N-8 E-14	SENWNE	2897
70.13	137 Northeast	N/A	-96.42540	34.99701	Davis Bros.	PARKS B	N/A	327363	Hughes	6 N-8 E-14	SENENE	2691
70.30	334 Northeast	N/A	-96.42250	34.99500	Webco Drlg. Co.	DAVIS B	N/A	327363	Hughes	6 N-8 E-13	NWSWNW	2641
70.32	293 West	N/A	-96.42910	34.99326	Davis Bros.	PARKS B	N/A	327363	Hughes	6 N-8 E-14	SESWNE	2664
70.47	151 West	N/A	-96.42690	34.99145	Davis Bros.	PARKS D	N/A	327363	Hughes	6 N-8 E-14	NWNESE	2663
70.57	382 West	N/A	-96.42890	34.98964	Davis Bros.	PARKS C	N/A	327363	Hughes	6 N-8 E-14	SENWSE	2633
70.83	308 West	N/A	-96.42690	34.98603	Davis Bros.	ENGLISH B	N/A	327363	Hughes	6 N-8 E-14	SWSESE	2625
70.86	195 Northeast	N/A	-96.42140	34.98687	Ferguson Oil. Co.	LOVE	N/A	N/A	Hughes	6 N-8 E-13	SWSW	3236
74.70	84 Northeast	N/A	-96.40000	34.93526	G.O. Philpot Oper. Co.	PERKINS PHILPOT ENTERPRISES	N/A	011231	Hughes	5 N-9 E-6	SWSENW	3995
74.79	57 Southwest	N/A	-96.40050	34.93346	G.O. Philpot Oper. Co.	PERKINS PHILPOT ENTERPRIS ES	N/A	011231	Hughes	5 N-9 E-6	NWNESW	5900
74.91	320 Northeast	N/A	-96.39590	34.93346	E.L. Johnson	PERKINS	N/A	N/A	Hughes	5 N-9 E-6	NWNWSE	0
74.96	393 Southwest	N/A	-96.40230	34.92976	E.L. Johnson	PERKINS	N/A	N/A	Hughes	5 N-9 E-6	NESWSW	3806
75.13	235 West	N/A	-96.40000	34.92894	Texas Co.	A HICKS	N/A	N/A	Hughes	5 N-9 E-6	EHWHSES W	2085
75.71	281 West	N/A	-96.39840	34.92073	Melco Prod. Co.	PLUNK	N/A	N/A	Hughes	5 N-9 E-7	SESENW	5860
76.10	154 West	N/A	-96.39590	34.91531	J.G. Gilmore Jr.	LEROY MULLINS	N/A	011231	Hughes	5 N-9 E-7	NWSWSE	2700
76.73	181 East	N/A	-96.39160	34.90628	Nat. Res. Dev. Inc.	OLIVO	N/A	N/A	Hughes	5 N-9 E-18	SWSENE	3000
77.27	128 Northeast	N/A	-96.39100	34.90040	Green Horn Oil	BETTY LOU	N/A	N/A	Hughes	5 N-9 E-18	SENWSES E	940
77.47	311 Northeast	N/A	-96.38740	34.89719	N. Biffle et al	CHILES	N/A	011231	Hughes	5 N-9 E-20	NWNWNW	2800
77.55	290 West	N/A	-96.39380	34.89543	L.C. Brown Co.	OLIVO	N/A	011231	Hughes	5 N-9 E-19	SWNWNE	950
77.58	111 Northeast	N/A	-96.38940	34.89543	C.L. Coshow	OLIVO	N/A	N/A	Hughes	5 N-9 E-19	SENENE	3763
77.69	111 West	N/A	-96.39160	34.89362	Shenandoah Drlg.	KEITH TWIN	N/A	N/A	Hughes	5 N-9 E-19	NWSENE	897
77.80	229 West	N/A	-96.39270	34.89201	OK Basic Econ. Corp.	OLIVO	N/A	011231	Hughes	5 N-9 E-19	NE	2891
77.95	44 Northeast	N/A	-96.38940	34.89001	OK-TX Oil Corp.	BROADDUS	N/A	011231	Hughes	5 N-9 E-19	NENESE	996
78.04	385 West	N/A	-96.39380	34.88820	OK-TX Oil Corp.	MEANS	N/A	011231	Hughes	5 N-9 E-19	SENWSE	949
78.08	13 Northeast	N/A	-96.38940	34.88820	OK-TX Oil Corp.	MEANS	N/A	011231	Hughes	5 N-9 E-19	SENESE	1027
78.08	244 West	N/A	-96.39210	34.88775	OK-TX Oil Corp.	MEANS	N/A	011231	Hughes	5 N-9 E-19	SWSWNES E	977
78.18	117 Northeast	N/A	-96.38800	34.88680	F.A. Brown	CHILES	N/A	011231	Hughes	5 N-9 E-20	NWNWSW SW	910
78.20	216 West	N/A	-96.39160	34.88639	OK-TX Oil Corp.	BROADDUS	N/A	011231	Hughes	5 N-9 E-19	NWSESE	965

78.20	167 East	N/A	-96.38740	34.88635	F.A. Brown	CHILES	N/A	011231	Hughes	5 N-9 E-20	NWSWSW	2812
78.20	167 East	N/A	-96.38740	34.88635	N. Biffle et al	CHILES	N/A	011231	Hughes	5 N-9 E-20	NWSWSW	1060
78.20	368 East	N/A	-96.38520	34.88635	N. Biffle et al	R C CHILES	N/A	011231	Hughes	5 N-9 E-20	NESWSW	2828
78.30	338 East	N/A	-96.38550	34.88499	T. Potter	BROADDUS	N/A	011231	Hughes	5 N-9 E-20	NWSESWSW	1127
78.33	115 West	N/A	-96.39050	34.88459	P. Miller	BROODUS	N/A	011231	Hughes	5 N-9 E-19	CTSHSESE	912
78.33	14 West	N/A	-96.38940	34.88459	Collis Davis Co.	BROADDUS	N/A	011231	Hughes	5 N-9 E-19	CTSESESE	2856
78.33	187 East	N/A	-96.38720	34.88454	T. Potter	BROADDUS	N/A	011231	Hughes	5 N-9 E-20	SWSWSW	2850
78.45	7 Northeast	N/A	-96.38880	34.88298	OK-TX Oil Corp.	EDD WILSON	N/A	011231	Hughes	5 N-9 E-30	NENENENE	950
78.52	363 Northeast	N/A	-96.38520	34.88454	T. Potter et al	C C ROSS	N/A	011231	Hughes	5 N-9 E-20	SESWSW	2945
78.53	377 Northeast	N/A	-96.38500	34.88454	T. Potter	BROADDUS	N/A	011231	Hughes	5 N-9 E-20	SESWSW	2882
78.58	236 Northeast	N/A	-96.38510	34.88252	E.L. Perkins	STELLA M RIVES	N/A	011231	Hughes	5 N-9 E-29	NENWNW	2900
78.63	35 Southwest	N/A	-96.38730	34.88072	Triangle Ent. Inc.	RIVES	N/A	011231	Hughes	5 N-9 E-29	SWNWNW	0
78.69	144 Northeast	N/A	-96.38510	34.88072	Triangle Ent. Inc.	RIVES	N/A	011231	Hughes	5 N-9 E-29	SENWNW	0
79.21	335 West	N/A	-96.38780	34.87304	L. Walker	BUTTRAM	N/A	N/A	Hughes	5 N-9 E-29	NWSWNWSW	1003
79.30	118 East	N/A	-96.38290	34.87168	Ramsey Eng. Inc.	BOYD	N/A	N/A	Hughes	5 N-9 E-29	NWSESW	1050
79.43	83 West	N/A	-96.38510	34.86987	W.K. Jones Drlg Co.	J H BRYANT	N/A	N/A	Hughes	5 N-9 E-29	SESWSW	2512
79.55	95 West	N/A	-96.38520	34.86805	G.J. Greer	STARK	N/A	N/A	Hughes	5 N-9 E-32	NENWNW	1360
80.10	108 East	N/A	-96.38300	34.85992	W.A. Bryant & R. Alt	BOYD	N/A	N/A	Hughes	5 N-9 E-32	WHNESW	956
81.45	14 West	N/A	-96.39170	34.84177	Apache Corp.	HUDSON	N/A	N/A	Hughes	4 N-9 E-6	CTSESE	4464
88.26	208 West	N/A	-96.39610	34.74348	Wilshire Oil Co.	HAMILTON	N/A	N/A	Coal	3 N-9 E-7	NWSE	5702
88.70	101 West	N/A	-96.39510	34.73707	Hazelwood Prod. Co.	HAMILTON	N/A	N/A	Coal	3 N-9 E-18	CTNENWNE	5920
90.21	254 Northeast	N/A	-96.39070	34.71719	Diamond K Oil Inc.	DANIEL	N/A	N/A	Coal	3 N-9 E-19	SESENE	5589
96.88	92 Northeast	N/A	-96.35710	34.62490	D.W. Cotton Jr.	SMITH	N/A	N/A	Coal	2 N-9 E-21	NWSESE	5275
97.29	371 Northeast	N/A	-96.35340	34.62078	Ramsey Pet. Corp.	REPLOGLE	N/A	129853	Coal	2 N-9 E-27	NWNWNW	1416
97.30	184 Southwest	N/A	-96.35850	34.61823	D.W. Cotton Jr.	HAAS	N/A	129853	Coal	2 N-9 E-28	SWNENE	1412
97.33	207 Southwest	N/A	-96.35850	34.61769	Phillips Pet. Co.	PAYTE	N/A	129853	Coal	2 N-9 E-28	NWSENE	5200
97.33	207 Southwest	N/A	-96.35850	34.61769	Boettcher Oil Co.	PAYTE (SHEEAN)	N/A	129853	Coal	2 N-9 E-28	NWSENE	0
97.47	166 Southwest	N/A	-96.35700	34.61618	Phillips Pet. Co.	HOLDER C	N/A	129853	Coal	2 N-9 E-28	SWSENE	6380
97.53	197 Southwest	N/A	-96.35680	34.61528	Bottomhole Ltd.	CRANE	N/A	129853	Coal	2 N-9 E-28	SWSENE	1296
97.53	187	N/A	-96.35660	34.61528	Bottomhole Ltd.	CRANE (FORMERLY	N/A	129853	Coal	2 N-9 E-28	CTSHSEN	6887

	Southwest					ROBINS)					E	
97.53	187 Southwest	N/A	-96.35660	34.61528	Bottomhole Ltd.	CRANE (FORMERLY ROBBINS)	N/A	129853	Coal	2 N-9 E-28	CTSHSEN E	6887
97.56	224 Northeast	N/A	-96.35230	34.61626	Ideal Cement Co.	HARRYMAN	N/A	129853	Coal	2 N-9 E-27	SWNW	6970
97.66	239 West	N/A	-96.35660	34.61374	Ranken En. Corp.	CRANE	N/A	129853	Coal	2 N-9 E-28	NENESE	5120
97.80	401 West	N/A	-96.35770	34.61166	Gomaco Inc.	HOLDER	N/A	129853	Coal	2 N-9 E-28	SWNESE	7227
97.81	205 West	N/A	-96.35550	34.61166	Pan Amer. Pet. Corp.	MAY UNIT	N/A	129853	Coal	2 N-9 E-28	SENESE	0
97.84	9 West	N/A	-96.35340	34.61174	Carter Oil Co.	CLAYTOR C-56	N/A	129853	Coal	2 N-9 E-27	CTSWNWS W	6899
97.84	9 West	N/A	-96.35340	34.61174	Humble Oil Co.	CLAYTOR C-56	N/A	129853	Coal	2 N-9 E-27	CTSWNWS W	6899
97.84	9 West	N/A	-96.35340	34.61174	Energy Res.Group Inc.	CLAYTOR C-56	N/A	129853	Coal	2 N-9 E-27	CTSWNWS W	0
97.84	9 West	N/A	-96.35340	34.61174	G. Matthews Oil	CLAYTOR C-56	N/A	129853	Coal	2 N-9 E-27	CTSWNWS W	6899
97.84	376 Northeast	N/A	-96.34930	34.61264	Carter Oil Co.	CLAYTOR C-56	N/A	129853	Coal	2 N-9 E-27	CTWHNES W	6722
97.84	376 Northeast	N/A	-96.34930	34.61264	Carter Oil Co.	CLAYTOR C-56	N/A	129853	Coal	2 N-9 E-27	CTWHNES W	0
97.93	259 West	N/A	-96.35550	34.60986	Twin Oil Corp.	J ARRINGTON	N/A	129853	Coal	2 N-9 E-28	NESESE	6894
97.93	259 West	N/A	-96.35550	34.60986	Atlantic Richfield Co.	ARRINGTON UNIT	N/A	129853	Coal	2 N-9 E-28	NESESE	6891
97.93	259 West	N/A	-96.35550	34.60986	Arco Oil Co.	ARRINGTON UNIT	N/A	129853	Coal	2 N-9 E-28	NESESE	0
98.00	131 Northeast	N/A	-96.35120	34.60993	Drlg. & Expl. Co. Inc.	CODY	N/A	129853	Coal	2 N-9 E-27	NESWSW	7656
98.00	131 Northeast	N/A	-96.35120	34.60993	Arco Oil Co.	CODY UNIT	N/A	129853	Coal	2 N-9 E-27	NESWSW	7643
98.03	180 Northeast	N/A	-96.35060	34.60993	Oakland Pet. Op. Co.	ROBINS	N/A	129853	Coal	2 N-9 E-27	NESWSW	8750
98.04	4 Southwest	N/A	-96.35230	34.60903	Tripower Res. Inc.	CODY UNIT DE	N/A	N/A	Coal	2 N-9 E-27	CTSWSW	7003
98.06	186 Northeast	N/A	-96.35030	34.60962	Ideal Cement Co.	CLAYTOR-BOOCH	N/A	129853	Coal	2 N-9 E-27	NESWSW	1756
98.23	168 Northeast	N/A	-96.34900	34.60747	Energy Res.Group Inc.	CENTRAHOMA TOWNSITE	N/A	129853	Coal	2 N-9 E-27	SWSESW	6993
98.23	168 Northeast	N/A	-96.34900	34.60747	Energy Res.Group Inc.	CENTRAHOMA TOWNSITE	N/A	129853	Coal	2 N-9 E-27	SWSESW	6993
98.23	168 Northeast	N/A	-96.34900	34.60747	Tripower Res. Inc.	CENTRAHOMA TOWNSITE	N/A	N/A	Coal	2 N-9 E-27	SWSESW	6993
98.23	181 Northeast	N/A	-96.34880	34.60747	Energy Res.Group Inc.	CENTRAHOMA TOWNSITE	N/A	129853	Coal	2 N-9 E-27	SESWSES W	1790
98.23	181 Northeast	N/A	-96.34880	34.60747	Oakland Pet. Op. Co.	CENTRAHOMA TOWNSITE	N/A	129853	Coal	2 N-9 E-27	SESWSES W	1790
98.35	278 Northeast	N/A	-96.34680	34.60632	Humble Oil Co.	JOHN THOMPSON	N/A	129853	Coal	2 N-9 E-34	NENENW	6927
98.35	278 Northeast	N/A	-96.34680	34.60632	Humble Oil Co.	JOHN THOMPSON	N/A	129853	Coal	2 N-9 E-34	NENENW	6927
98.35	278 Northeast	N/A	-96.34680	34.60632	Energy Res.Group Inc.	JOHN THOMPSON	N/A	129853	Coal	2 N-9 E-34	NENENW	6927

98.35	278 Northeast	N/A	-96.34680	34.60632	Tripower Res. Inc.	JOHN THOMPSON	N/A	129853	Coal	2 N-9 E-34	NENENW	6927
98.43	94 Northeast	N/A	-96.34790	34.60451	Carter Oil Co.	JOHN THOMPSON	N/A	129853	Coal	2 N-9 E-34	CTSHNENW	7126
98.43	94 Northeast	N/A	-96.34790	34.60451	Carter Oil Co.	JOHN THOMPSON	N/A	129853	Coal	2 N-9 E-34	CTSHNENW	7126
98.43	94 Northeast	N/A	-96.34790	34.60451	Carter Oil Co.	JOHN THOMPSON	N/A	129853	Coal	2 N-9 E-34	CTSHNENW	7126
98.70	358 North	N/A	-96.34440	34.60451	J.A. Bearman	J R KITCHEL	N/A	129853	Coal	2 N-9 E-34	SWNWNE	0
98.70	358 North	N/A	-96.34440	34.60451		J BURMAN	N/A	129853	Coal	2 N-9 E-34	SWNWNE	2780
98.72	171 Northeast	N/A	-96.34440	34.60270	J.R. Kitchel	OKLA PORTLAND CEMENT	N/A	N/A	Coal	2 N-9 E-34	NWSWNE	2130
99.64	302 West	N/A	-96.34330	34.58793	Cuma Oil Co.	REYNOLDS	N/A	N/A	Coal	1 N-9 E-3	CTNHSWNE	2075
101.13	34 West	N/A	-96.33020	34.56905	Glenn Supply Co.	MAYER	N/A	N/A	Coal	1 N-9 E-11	NESW	2014
103.60	350 West	N/A	-96.31710	34.53613	Draco Prod. Co.	COSTELLO	N/A	N/A	Coal	1 N-9 E-24	SHSWSW	1680
103.79	294 Northeast	N/A	-96.30940	34.53550	G.F. Galbreath	GALBREATH-RUMMELL ETAL	N/A	N/A	Coal	1 N-9 E-24	SWSWSE	3380
104.94	249 West	N/A	-96.30550	34.51835	W.C. Payne Trust	HAMPTON	N/A	N/A	Coal	1 N-9 E-36	WHWHNENE	1755
125.20	96 Northeast	N/A	-96.17400	34.25259	Exxon Corp.	A MULLEN	N/A	N/A	Atoka	3 S-11 E-32	NHSHSENW	13188
125.27	380 Northeast	N/A	-96.17070	34.25229	Latilo Inv.	SIPES	N/A	N/A	Atoka	3 S-11 E-32	CTSWSWNE	2240
125.33	61 West	N/A	-96.17510	34.25048	Bedrock Inc.	J LEE	N/A	N/A	Atoka	3 S-11 E-32	NWNESW	2257
129.85	247 Southwest	N/A	-96.15740	34.18642	J.A. Taylor	INGRAM	N/A	N/A	Atoka	4 S-11 E-21	SESWSESW	3079
129.85	247 Southwest	N/A	-96.15740	34.18642	Funk Expl. Inc.	INGRAM	N/A	N/A	Atoka	4 S-11 E-21	SESWSESW	6105
130.75	342 Northeast	N/A	-96.14450	34.17703	J.A. Taylor	TIGERT	N/A	N/A	Atoka	4 S-11 E-27	CTWHNWSW	1329
132.47	325 Northeast	N/A	-96.13040	34.15604	Texaco Inc.	STUART-STATE	N/A	N/A	Bryan	5 S-11 E-3	NENENE	2126
203.43	51 Northeast	N/A	N/A	N/A	N/A	N/A	N/A	N/A	Hopkins	N/A	N/A	0
205.13	316 Northeast	N/A	N/A	N/A	N/A	N/A	N/A	N/A	Hopkins	N/A	N/A	0
205.43	267 Northeast	N/A	N/A	N/A	N/A	N/A	N/A	N/A	Hopkins	N/A	N/A	0
205.96	286 Northeast	N/A	N/A	N/A	N/A	N/A	N/A	N/A	Hopkins	N/A	N/A	0
206.03	376 Northeast	N/A	N/A	N/A	N/A	N/A	N/A	N/A	Hopkins	N/A	N/A	0
206.33	247 North-east	N/A	N/A	N/A	N/A	N/A	N/A	N/A	Hopkins	N/A	N/A	0
212.74	196 West	N/A	N/A	N/A	N/A	N/A	N/A	N/A	Hopkins	N/A	N/A	0
213.23	139 Southwest	N/A	N/A	N/A	N/A	N/A	N/A	N/A	Hopkins	N/A	N/A	0

213.47	318 Southwest	N/A	N/A	N/A	N/A	N/A	N/A	N/A	Hopkins	N/A	N/A	0
213.60	373 Northeast	N/A	N/A	N/A	N/A	N/A	N/A	N/A	Hopkins	N/A	N/A	0
218.67	230 South-west	N/A	N/A	N/A	N/A	N/A	N/A	N/A	Hopkins	N/A	N/A	0
222.23	282 South-west	N/A	N/A	N/A	N/A	N/A	N/A	N/A	Franklin	N/A	N/A	0
225.64	305 North-east	N/A	N/A	N/A	N/A	N/A	N/A	N/A	Franklin	N/A	N/A	0
228.00	94 North-east	N/A	N/A	N/A	N/A	N/A	N/A	N/A	Franklin	N/A	N/A	0
228.40	104 West	N/A	N/A	N/A	N/A	N/A	N/A	N/A	Franklin	N/A	N/A	0
228.56	94 West	N/A	N/A	N/A	N/A	N/A	N/A	N/A	Franklin	N/A	N/A	0
229.03	98 East	N/A	N/A	N/A	N/A	N/A	N/A	N/A	Franklin	N/A	N/A	0
230.33	50 West	N/A	N/A	N/A	N/A	N/A	N/A	N/A	Franklin	N/A	N/A	0
234.19	395 West	N/A	N/A	N/A	N/A	N/A	N/A	N/A	Wood	N/A	N/A	0
234.89	302 West	N/A	N/A	N/A	N/A	N/A	N/A	N/A	Wood	N/A	N/A	0
239.18	188 West	N/A	N/A	N/A	N/A	N/A	N/A	N/A	Wood	N/A	N/A	0
253.75	15 West	N/A	N/A	N/A	N/A	N/A	N/A	N/A	Wood	N/A	N/A	0
255.98	316 West	N/A	N/A	N/A	N/A	N/A	N/A	N/A	Wood	N/A	N/A	0
256.01	230 West	N/A	N/A	N/A	N/A	N/A	N/A	N/A	Wood	N/A	N/A	0
260.99	51 North-east	N/A	N/A	N/A	N/A	N/A	N/A	N/A	Upshur	N/A	N/A	0
270.59	296 North-east	N/A	N/A	N/A	N/A	N/A	N/A	N/A	Smith	N/A	N/A	0
270.78	264 North-east	N/A	N/A	N/A	N/A	N/A	N/A	N/A	Smith	N/A	N/A	0
271.26	300 West	N/A	N/A	N/A	N/A	N/A	N/A	N/A	Smith	N/A	N/A	0
271.31	94 North-east	N/A	N/A	N/A	N/A	N/A	N/A	N/A	Smith	N/A	N/A	0
271.71	117 North-east	N/A	N/A	N/A	N/A	N/A	N/A	N/A	Smith	N/A	N/A	0
271.76	325 West	N/A	N/A	N/A	N/A	N/A	N/A	N/A	Smith	N/A	N/A	0
272.01	220 West	N/A	N/A	N/A	N/A	N/A	N/A	N/A	Smith	N/A	N/A	0
272.11	124 North-east	N/A	N/A	N/A	N/A	N/A	N/A	N/A	Smith	N/A	N/A	0
272.31	142 West	N/A	N/A	N/A	N/A	N/A	N/A	N/A	Smith	N/A	N/A	0
272.56	365 East	N/A	N/A	N/A	N/A	N/A	N/A	N/A	Smith	N/A	N/A	0

272.59	149 West	N/A	N/A	N/A	N/A	N/A	N/A	N/A	Smith	N/A	N/A	0
272.81	29 Southwest	N/A	N/A	N/A	N/A	N/A	N/A	N/A	Smith	N/A	N/A	0
272.87	43 Northeast	N/A	N/A	N/A	N/A	N/A	N/A	N/A	Smith	N/A	N/A	0
272.95	313 North-east	N/A	N/A	N/A	N/A	N/A	N/A	N/A	Smith	N/A	N/A	0
272.96	285 Southwest	N/A	N/A	N/A	N/A	N/A	N/A	N/A	Smith	N/A	N/A	0
273.31	332 North-east	N/A	N/A	N/A	N/A	N/A	N/A	N/A	Smith	N/A	N/A	0
273.44	191 West	N/A	N/A	N/A	N/A	N/A	N/A	N/A	Smith	N/A	N/A	0
273.54	204 North-east	N/A	N/A	N/A	N/A	N/A	N/A	N/A	Smith	N/A	N/A	0
273.63	376 Northeast	N/A	N/A	N/A	N/A	N/A	N/A	N/A	Smith	N/A	N/A	0
273.63	301 North-east	N/A	N/A	N/A	N/A	N/A	N/A	N/A	Smith	N/A	N/A	0
273.63	164 North-east	N/A	N/A	N/A	N/A	N/A	N/A	N/A	Smith	N/A	N/A	0
273.93	185 North-east	N/A	N/A	N/A	N/A	N/A	N/A	N/A	Smith	N/A	N/A	0
273.93	392 West	N/A	N/A	N/A	N/A	N/A	N/A	N/A	Smith	N/A	N/A	0
274.10	351 North-east	N/A	N/A	N/A	N/A	N/A	N/A	N/A	Smith	N/A	N/A	0
274.18	94 West	N/A	N/A	N/A	N/A	N/A	N/A	N/A	Smith	N/A	N/A	0
274.20	93 West	N/A	N/A	N/A	N/A	N/A	N/A	N/A	Smith	N/A	N/A	0
274.25	375 North-east	N/A	N/A	N/A	N/A	N/A	N/A	N/A	Smith	N/A	N/A	0
274.34	227 West	N/A	N/A	N/A	N/A	N/A	N/A	N/A	Smith	N/A	N/A	0
274.37	223 North-east	N/A	N/A	N/A	N/A	N/A	N/A	N/A	Smith	N/A	N/A	0
274.38	201 West	N/A	N/A	N/A	N/A	N/A	N/A	N/A	Smith	N/A	N/A	0
274.52	136 Northeast	N/A	N/A	N/A	N/A	N/A	N/A	N/A	Smith	N/A	N/A	0
274.58	123 North-east	N/A	N/A	N/A	N/A	N/A	N/A	N/A	Smith	N/A	N/A	0
274.60	197 West	N/A	N/A	N/A	N/A	N/A	N/A	N/A	Smith	N/A	N/A	0
274.66	161 North-east	N/A	N/A	N/A	N/A	N/A	N/A	N/A	Smith	N/A	N/A	0
274.84	102 North-east	N/A	N/A	N/A	N/A	N/A	N/A	N/A	Smith	N/A	N/A	0
274.87	287 West	N/A	N/A	N/A	N/A	N/A	N/A	N/A	Smith	N/A	N/A	0
274.87	384 West	N/A	N/A	N/A	N/A	N/A	N/A	N/A	Smith	N/A	N/A	0

275.30	54 West	N/A	N/A	N/A	N/A	N/A	N/A	N/A	Smith	N/A	N/A	0
275.35	384 North-east	N/A	N/A	N/A	N/A	N/A	N/A	N/A	Smith	N/A	N/A	0
275.53	467 Northeast	N/A	N/A	N/A	N/A	N/A	N/A	N/A	Smith	N/A	N/A	0
275.62	366 West	N/A	N/A	N/A	N/A	N/A	N/A	N/A	Smith	N/A	N/A	0
275.77	198 West	N/A	N/A	N/A	N/A	N/A	N/A	N/A	Smith	N/A	N/A	0
275.77	142 North-east	N/A	N/A	N/A	N/A	N/A	N/A	N/A	Smith	N/A	N/A	0
275.83	92 North-east	N/A	N/A	N/A	N/A	N/A	N/A	N/A	Smith	N/A	N/A	0
275.90	251 West	N/A	N/A	N/A	N/A	N/A	N/A	N/A	Smith	N/A	N/A	0
275.99	24 North-east	N/A	N/A	N/A	N/A	N/A	N/A	N/A	Smith	N/A	N/A	0
276.04	1 North-east	N/A	N/A	N/A	N/A	N/A	N/A	N/A	Smith	N/A	N/A	0
276.05	331 West	N/A	N/A	N/A	N/A	N/A	N/A	N/A	Smith	N/A	N/A	0
276.08	233 North-east	N/A	N/A	N/A	N/A	N/A	N/A	N/A	Smith	N/A	N/A	0
276.47	188 West	N/A	N/A	N/A	N/A	N/A	N/A	N/A	Smith	N/A	N/A	0
277.10	362 North-east	N/A	N/A	N/A	N/A	N/A	N/A	N/A	Smith	N/A	N/A	0
277.11	377 North-east	N/A	N/A	N/A	N/A	N/A	N/A	N/A	Smith	N/A	N/A	0
277.33	343 Northeast	N/A	N/A	N/A	N/A	N/A	N/A	N/A	Smith	N/A	N/A	0
277.75	204 East	N/A	N/A	N/A	N/A	N/A	N/A	N/A	Smith	N/A	N/A	0
277.82	128 West	N/A	N/A	N/A	N/A	N/A	N/A	N/A	Smith	N/A	N/A	0
278.09	83 West	N/A	N/A	N/A	N/A	N/A	N/A	N/A	Smith	N/A	N/A	0
278.26	341 North-east	N/A	N/A	N/A	N/A	N/A	N/A	N/A	Smith	N/A	N/A	0
278.26	296 North-east	N/A	N/A	N/A	N/A	N/A	N/A	N/A	Smith	N/A	N/A	0
278.52	189 West	N/A	N/A	N/A	N/A	N/A	N/A	N/A	Smith	N/A	N/A	0
279.99	392 West	N/A	N/A	N/A	N/A	N/A	N/A	N/A	Smith	N/A	N/A	0
280.43	139 West	N/A	N/A	N/A	N/A	N/A	N/A	N/A	Smith	N/A	N/A	0
281.07	255 West	N/A	N/A	N/A	N/A	N/A	N/A	N/A	Smith	N/A	N/A	0
284.38	195 Northeast	N/A	N/A	N/A	N/A	N/A	N/A	N/A	Smith	N/A	N/A	0
285.58	18 West	N/A	N/A	N/A	N/A	N/A	N/A	N/A	Smith	N/A	N/A	0

285.70	196 West	N/A	N/A	N/A	N/A	N/A	N/A	N/A	Smith	N/A	N/A	0
286.03	201 North-east	N/A	N/A	N/A	N/A	N/A	N/A	N/A	Smith	N/A	N/A	0
286.24	276 West	N/A	N/A	N/A	N/A	N/A	N/A	N/A	Smith	N/A	N/A	0
286.30	203 Northeast	N/A	N/A	N/A	N/A	N/A	N/A	N/A	Smith	N/A	N/A	0
286.52	296 West	N/A	N/A	N/A	N/A	N/A	N/A	N/A	Smith	N/A	N/A	0
286.62	113 Northeast	N/A	N/A	N/A	N/A	N/A	N/A	N/A	Smith	N/A	N/A	0
286.82	86 North-east	N/A	N/A	N/A	N/A	N/A	N/A	N/A	Smith	N/A	N/A	0
286.91	360 North-east	N/A	N/A	N/A	N/A	N/A	N/A	N/A	Smith	N/A	N/A	0
287.00	137 West	N/A	N/A	N/A	N/A	N/A	N/A	N/A	Smith	N/A	N/A	0
287.80	296 East	N/A	N/A	N/A	N/A	N/A	N/A	N/A	Smith	N/A	N/A	0
289.00	153 West	N/A	N/A	N/A	N/A	N/A	N/A	N/A	Smith	N/A	N/A	0
289.03	25 West	N/A	N/A	N/A	N/A	N/A	N/A	N/A	Smith	N/A	N/A	0
289.21	18 West	N/A	N/A	N/A	N/A	N/A	N/A	N/A	Smith	N/A	N/A	0
289.40	391 North-east	N/A	N/A	N/A	N/A	N/A	N/A	N/A	Smith	N/A	N/A	0
290.12	360 North-east	N/A	N/A	N/A	N/A	N/A	N/A	N/A	Smith	N/A	N/A	0
291.31	70 North-east	N/A	N/A	N/A	N/A	N/A	N/A	N/A	Smith	N/A	N/A	0
292.15	349 West	N/A	N/A	N/A	N/A	N/A	N/A	N/A	Cherokee	N/A	N/A	0
294.46	181 Northeast	N/A	N/A	N/A	N/A	N/A	N/A	N/A	Cherokee	N/A	N/A	0
295.21	224 West	N/A	N/A	N/A	N/A	N/A	N/A	N/A	Cherokee	N/A	N/A	0
295.85	375 West	N/A	N/A	N/A	N/A	N/A	N/A	N/A	Cherokee	N/A	N/A	0
296.19	33 North-east	N/A	N/A	N/A	N/A	N/A	N/A	N/A	Cherokee	N/A	N/A	0
296.34	35 North-east	N/A	N/A	N/A	N/A	N/A	N/A	N/A	Cherokee	N/A	N/A	0
296.66	162 West	N/A	N/A	N/A	N/A	N/A	N/A	N/A	Cherokee	N/A	N/A	0
297.02	205 North-east	N/A	N/A	N/A	N/A	N/A	N/A	N/A	Cherokee	N/A	N/A	0
297.05	236 North-east	N/A	N/A	N/A	N/A	N/A	N/A	N/A	Cherokee	N/A	N/A	0
297.54	138 North-east	N/A	N/A	N/A	N/A	N/A	N/A	N/A	Cherokee	N/A	N/A	0
297.54	207 North-east	N/A	N/A	N/A	N/A	N/A	N/A	N/A	Cherokee	N/A	N/A	0

297.68	316 North-east	N/A	N/A	N/A	N/A	N/A	N/A	N/A	Cherokee	N/A	N/A	0
297.89	337 North-east	N/A	N/A	N/A	N/A	N/A	N/A	N/A	Cherokee	N/A	N/A	0
298.11	309 Northeast	N/A	N/A	N/A	N/A	N/A	N/A	N/A	Cherokee	N/A	N/A	0
298.14	45 North-east	N/A	N/A	N/A	N/A	N/A	N/A	N/A	Cherokee	N/A	N/A	0
298.14	209 North-east	N/A	N/A	N/A	N/A	N/A	N/A	N/A	Cherokee	N/A	N/A	0
298.20	41 North-east	N/A	N/A	N/A	N/A	N/A	N/A	N/A	Cherokee	N/A	N/A	0
298.31	203 West	N/A	N/A	N/A	N/A	N/A	N/A	N/A	Cherokee	N/A	N/A	0
298.32	241 Northeast	N/A	N/A	N/A	N/A	N/A	N/A	N/A	Cherokee	N/A	N/A	0
298.32	10 West	N/A	N/A	N/A	N/A	N/A	N/A	N/A	Cherokee	N/A	N/A	0
298.40	195 North-east	N/A	N/A	N/A	N/A	N/A	N/A	N/A	Cherokee	N/A	N/A	0
298.42	253 West	N/A	N/A	N/A	N/A	N/A	N/A	N/A	Cherokee	N/A	N/A	0
298.47	41 North-east	N/A	N/A	N/A	N/A	N/A	N/A	N/A	Cherokee	N/A	N/A	0
298.49	119 West	N/A	N/A	N/A	N/A	N/A	N/A	N/A	Cherokee	N/A	N/A	0
298.53	258 North-east	N/A	N/A	N/A	N/A	N/A	N/A	N/A	Cherokee	N/A	N/A	0
298.55	132 North-east	N/A	N/A	N/A	N/A	N/A	N/A	N/A	Cherokee	N/A	N/A	0
298.59	295 West	N/A	N/A	N/A	N/A	N/A	N/A	N/A	Cherokee	N/A	N/A	0
298.83	149 West	N/A	N/A	N/A	N/A	N/A	N/A	N/A	Cherokee	N/A	N/A	0
299.53	88 North-east	N/A	N/A	N/A	N/A	N/A	N/A	N/A	Rusk	N/A	N/A	0
301.09	234 West	N/A	N/A	N/A	N/A	N/A	N/A	N/A	Rusk	N/A	N/A	0
302.24	66 West	N/A	N/A	N/A	N/A	N/A	N/A	N/A	Rusk	N/A	N/A	0
303.02	313 West	N/A	N/A	N/A	N/A	N/A	N/A	N/A	Rusk	N/A	N/A	0
303.08	130 West	N/A	N/A	N/A	N/A	N/A	N/A	N/A	Rusk	N/A	N/A	0
303.08	130 West	N/A	N/A	N/A	N/A	N/A	N/A	N/A	Rusk	N/A	N/A	0
303.14	379 West	N/A	N/A	N/A	N/A	N/A	N/A	N/A	Rusk	N/A	N/A	0
303.18	166 West	N/A	N/A	N/A	N/A	N/A	N/A	N/A	Rusk	N/A	N/A	0
303.31	55 West	N/A	N/A	N/A	N/A	N/A	N/A	N/A	Rusk	N/A	N/A	0
303.36	168 North-east	10721339	N/A	N/A	N/A	N/A	N/A	N/A	Rusk	N/A	N/A	0

306.25	91 West	10721017	N/A	N/A	N/A	N/A	N/A	N/A	Rusk	N/A	N/A	0
307.44	302 West	N/A	N/A	N/A	N/A	N/A	N/A	N/A	Rusk	N/A	N/A	0
307.70	125 North-east	10722306	N/A	N/A	N/A	N/A	N/A	N/A	Rusk	N/A	N/A	0
307.95	305 West	N/A	N/A	N/A	N/A	N/A	N/A	N/A	Rusk	N/A	N/A	0
308.57	106 North-east	N/A	N/A	N/A	N/A	N/A	N/A	N/A	Rusk	N/A	N/A	0
309.05	194 North-east	N/A	N/A	N/A	N/A	N/A	N/A	N/A	Rusk	N/A	N/A	0
310.82	285 West	N/A	N/A	N/A	N/A	N/A	N/A	N/A	Rusk	N/A	N/A	0
312.45	86 North-east	N/A	N/A	N/A	N/A	N/A	N/A	N/A	Rusk	N/A	N/A	0
323.18	361 West	10721383	N/A	N/A	N/A	N/A	N/A	N/A	Nacogdoches	N/A	N/A	0
323.38	192 North-east	10722631	N/A	N/A	N/A	N/A	N/A	N/A	Nacogdoches	N/A	N/A	0
323.64	41 West	N/A	N/A	N/A	N/A	N/A	N/A	N/A	Nacogdoches	N/A	N/A	0
323.85	295 North-east	N/A	N/A	N/A	N/A	N/A	N/A	N/A	Nacogdoches	N/A	N/A	0
324.14	317 North-east	N/A	N/A	N/A	N/A	N/A	N/A	N/A	Nacogdoches	N/A	N/A	0
324.42	271 West	N/A	N/A	N/A	N/A	N/A	N/A	N/A	Nacogdoches	N/A	N/A	0
324.43	247 East	N/A	N/A	N/A	N/A	N/A	N/A	N/A	Nacogdoches	N/A	N/A	0
324.68	67 North-east	10721808	N/A	N/A	N/A	N/A	N/A	N/A	Nacogdoches	N/A	N/A	0
324.90	346 East	10730218	N/A	N/A	N/A	N/A	N/A	N/A	Nacogdoches	N/A	N/A	0
325.21	56 West	N/A	N/A	N/A	N/A	N/A	N/A	N/A	Nacogdoches	N/A	N/A	0
325.28	239 East	10721120	N/A	N/A	N/A	N/A	N/A	N/A	Nacogdoches	N/A	N/A	0
325.54	85 South-east	10720927	N/A	N/A	N/A	N/A	N/A	N/A	Nacogdoches	N/A	N/A	0
325.78	71 South-east	N/A	N/A	N/A	N/A	N/A	N/A	N/A	Nacogdoches	N/A	N/A	0
326.05	389 North	N/A	N/A	N/A	N/A	N/A	N/A	N/A	Nacogdoches	N/A	N/A	0
326.15	105 East	10700375	N/A	N/A	N/A	N/A	N/A	N/A	Nacogdoches	N/A	N/A	0
327.08	214 East	10700375	N/A	N/A	N/A	N/A	N/A	N/A	Nacogdoches	N/A	N/A	0
327.32	66 West	N/A	N/A	N/A	N/A	N/A	N/A	N/A	Nacogdoches	N/A	N/A	0
327.93	85 East	10701020	N/A	N/A	N/A	N/A	N/A	N/A	Nacogdoches	N/A	N/A	0
328.37	168 East	10701020	N/A	N/A	N/A	N/A	N/A	N/A	Nacogdoches	N/A	N/A	0

329.32	325 North-west	10730052	N/A	N/A	N/A	N/A	N/A	N/A	Nacogdoches	N/A	N/A	0
330.54	182 East	10720211	N/A	N/A	N/A	N/A	N/A	N/A	Nacogdoches	N/A	N/A	0
331.43	129 West	10720212	N/A	N/A	N/A	N/A	N/A	N/A	Nacogdoches	N/A	N/A	0
331.72	142 North-east	N/A	N/A	N/A	N/A	N/A	N/A	N/A	Nacogdoches	N/A	N/A	0
333.64	282 South-east	10700945	N/A	N/A	N/A	N/A	N/A	N/A	Cherokee	N/A	N/A	0
334.37	88 South-east	10700945	N/A	N/A	N/A	N/A	N/A	N/A	Cherokee	N/A	N/A	0
335.68	362 West	10700945	N/A	N/A	N/A	N/A	N/A	N/A	Cherokee	N/A	N/A	0
335.75	394 West	N/A	N/A	N/A	N/A	N/A	N/A	N/A	Cherokee	N/A	N/A	0
335.75	394 West	N/A	N/A	N/A	N/A	N/A	N/A	N/A	Cherokee	N/A	N/A	0
335.93	350 East	N/A	N/A	N/A	N/A	N/A	N/A	N/A	Cherokee	N/A	N/A	0
336.01	255 West	10730090	N/A	N/A	N/A	N/A	N/A	N/A	Cherokee	N/A	N/A	0
336.11	38 East	10720037	N/A	N/A	N/A	N/A	N/A	N/A	Cherokee	N/A	N/A	0
336.84	70 North-east	N/A	N/A	N/A	N/A	N/A	N/A	N/A	Cherokee	N/A	N/A	0
336.90	326 North-east	10730024	N/A	N/A	N/A	N/A	N/A	N/A	Cherokee	N/A	N/A	0
336.96	347 West	10730119	N/A	N/A	N/A	N/A	N/A	N/A	Cherokee	N/A	N/A	0
337.71	298 West	N/A	N/A	N/A	N/A	N/A	N/A	N/A	Cherokee	N/A	N/A	0
338.36	261 West	10700922	N/A	N/A	N/A	N/A	N/A	N/A	Cherokee	N/A	N/A	0
338.46	83 East	10700922	N/A	N/A	N/A	N/A	N/A	N/A	Cherokee	N/A	N/A	0
338.50	182 East	10700922	N/A	N/A	N/A	N/A	N/A	N/A	Cherokee	N/A	N/A	0
339.05	59 West	10721251	N/A	N/A	N/A	N/A	N/A	N/A	Angelina	N/A	N/A	0
339.32	104 West	10721322	N/A	N/A	N/A	N/A	N/A	N/A	Angelina	N/A	N/A	0
339.63	378 North-east	10700450	N/A	N/A	N/A	N/A	N/A	N/A	Angelina	N/A	N/A	0
339.64	36 North-east	10700450	N/A	N/A	N/A	N/A	N/A	N/A	Angelina	N/A	N/A	0
339.86	164 South-east	10700450	N/A	N/A	N/A	N/A	N/A	N/A	Angelina	N/A	N/A	0
340.74	158 West	10730022	N/A	N/A	N/A	N/A	N/A	N/A	Angelina	N/A	N/A	0
341.40	324 East	10730098	N/A	N/A	N/A	N/A	N/A	N/A	Angelina	N/A	N/A	0
350.31	402 South-west	N/A	N/A	N/A	N/A	N/A	N/A	N/A	Angelina	N/A	N/A	0

364.44	276 North-east	N/A	N/A	N/A	N/A	N/A	N/A	N/A	Angelina	N/A	N/A	0
365.14	46 East	10720131	N/A	N/A	N/A	N/A	N/A	N/A	Angelina	N/A	N/A	0
366.85	91 North-east	10730094	N/A	N/A	N/A	N/A	N/A	N/A	Polk	N/A	N/A	0
368.15	365 Southwest	10730050	N/A	N/A	N/A	N/A	N/A	N/A	Polk	N/A	N/A	0
368.16	345 South-west	10730112	N/A	N/A	N/A	N/A	N/A	N/A	Polk	N/A	N/A	0
368.20	94 North-east	10730004	N/A	N/A	N/A	N/A	N/A	N/A	Polk	N/A	N/A	0
368.65	202 West	10722746	N/A	N/A	N/A	N/A	N/A	N/A	Polk	N/A	N/A	0
368.69	150 North-east	10722756	N/A	N/A	N/A	N/A	N/A	N/A	Polk	N/A	N/A	0
369.05	178 East	10721808	N/A	N/A	N/A	N/A	N/A	N/A	Polk	N/A	N/A	0
369.25	311 West	10722770	N/A	N/A	N/A	N/A	N/A	N/A	Polk	N/A	N/A	0
370.14	394 East	10722843	N/A	N/A	N/A	N/A	N/A	N/A	Polk	N/A	N/A	0
370.37	389 West	10722854	N/A	N/A	N/A	N/A	N/A	N/A	Polk	N/A	N/A	0
385.33	84 East	10722862	N/A	N/A	N/A	N/A	N/A	N/A	Polk	N/A	N/A	0
386.01	375 West	10722713	N/A	N/A	N/A	N/A	N/A	N/A	Polk	N/A	N/A	0
386.38	210 West	10722869	N/A	N/A	N/A	N/A	N/A	N/A	Polk	N/A	N/A	0
390.04	105 East	10722764	N/A	N/A	N/A	N/A	N/A	N/A	Polk	N/A	N/A	0
392.07	177 West	10722932	N/A	N/A	N/A	N/A	N/A	N/A	Polk	N/A	N/A	0
392.10	83 East	10721808	N/A	N/A	N/A	N/A	N/A	N/A	Polk	N/A	N/A	0
392.44	14 East	10722764	N/A	N/A	N/A	N/A	N/A	N/A	Polk	N/A	N/A	0
408.70	165 West	N/A	N/A	N/A	N/A	N/A	N/A	N/A	Polk	N/A	N/A	0
409.89	202 South-west	N/A	N/A	N/A	N/A	N/A	N/A	N/A	Polk	N/A	N/A	0
410.22	144 South-west	N/A	N/A	N/A	N/A	N/A	N/A	N/A	Polk	N/A	N/A	0
415.19	96 North	N/A	N/A	N/A	N/A	N/A	N/A	N/A	Liberty	N/A	N/A	0
418.15	10 North-east	N/A	N/A	N/A	N/A	N/A	N/A	N/A	Liberty	N/A	N/A	0
430.01	268 West	N/A	N/A	N/A	N/A	N/A	N/A	N/A	Liberty	N/A	N/A	0
439.81	82 North-east	N/A	N/A	N/A	N/A	N/A	N/A	N/A	Hardin	N/A	N/A	0
439.95	94 North-east	N/A	N/A	N/A	N/A	N/A	N/A	N/A	Hardin	N/A	N/A	0

440.19	264 North	N/A	N/A	N/A	N/A	N/A	N/A	N/A	Hardin	N/A	N/A	0
446.67	104 South-west	N/A	N/A	N/A	N/A	N/A	N/A	N/A	Hardin	N/A	N/A	0
448.62	254 Southwest	N/A	N/A	N/A	N/A	N/A	N/A	N/A	Jefferson	N/A	N/A	0
449.76	259 South-west	N/A	N/A	N/A	N/A	N/A	N/A	N/A	Jefferson	N/A	N/A	0
450.62	346 North-east	N/A	N/A	N/A	N/A	N/A	N/A	N/A	Jefferson	N/A	N/A	0
451.38	352 Northeast	N/A	N/A	N/A	N/A	N/A	N/A	N/A	Jefferson	N/A	N/A	0
451.67	29 South-west	N/A	N/A	N/A	N/A	N/A	N/A	N/A	Jefferson	N/A	N/A	0
452.71	334 North-west	N/A	N/A	N/A	N/A	N/A	N/A	N/A	Jefferson	N/A	N/A	0
455.40	68 North	N/A	N/A	N/A	N/A	N/A	N/A	N/A	Jefferson	N/A	N/A	0
457.63	149 North-east	N/A	N/A	N/A	N/A	N/A	N/A	N/A	Jefferson	N/A	N/A	0
458.07	321 Southwest	N/A	N/A	N/A	N/A	N/A	N/A	N/A	Jefferson	N/A	N/A	0
458.35	19 North-east	N/A	N/A	N/A	N/A	N/A	N/A	N/A	Jefferson	N/A	N/A	0
463.69	365 South-west	N/A	N/A	N/A	N/A	N/A	N/A	N/A	Jefferson	N/A	N/A	0
464.17	272 North-east	N/A	N/A	N/A	N/A	N/A	N/A	N/A	Jefferson	N/A	N/A	0
464.44	231 South-west	N/A	N/A	N/A	N/A	N/A	N/A	N/A	Jefferson	N/A	N/A	0
464.48	310 North-east	N/A	N/A	N/A	N/A	N/A	N/A	N/A	Jefferson	N/A	N/A	0
464.50	14 North-east	N/A	N/A	N/A	N/A	N/A	N/A	N/A	Jefferson	N/A	N/A	0
464.53	327 South	N/A	N/A	N/A	N/A	N/A	N/A	N/A	Jefferson	N/A	N/A	0
464.58	2 South	N/A	N/A	N/A	N/A	N/A	N/A	N/A	Jefferson	N/A	N/A	0
464.74	318 North-east	N/A	N/A	N/A	N/A	N/A	N/A	N/A	Jefferson	N/A	N/A	0
464.76	191 South-west	N/A	N/A	N/A	N/A	N/A	N/A	N/A	Jefferson	N/A	N/A	0
465.52	245 South	N/A	N/A	N/A	N/A	N/A	N/A	N/A	Jefferson	N/A	N/A	0
465.57	16 North	N/A	N/A	N/A	N/A	N/A	N/A	N/A	Jefferson	N/A	N/A	0
465.74	268 South	N/A	N/A	N/A	N/A	N/A	N/A	N/A	Jefferson	N/A	N/A	0
465.78	192 South	N/A	N/A	N/A	N/A	N/A	N/A	N/A	Jefferson	N/A	N/A	0
466.02	193 North-east	N/A	N/A	N/A	N/A	N/A	N/A	N/A	Jefferson	N/A	N/A	0
466.05	6 South-west	N/A	N/A	N/A	N/A	N/A	N/A	N/A	Jefferson	N/A	N/A	0

466.05	6 Southwest	N/A	N/A	N/A	N/A	N/A	N/A	N/A	Jefferson	N/A	N/A	0
466.11	82 Southwest	N/A	N/A	N/A	N/A	N/A	N/A	N/A	Jefferson	N/A	N/A	0
466.60	1 South-west	N/A	N/A	N/A	N/A	N/A	N/A	N/A	Jefferson	N/A	N/A	0
466.79	1 Southwest	N/A	N/A	N/A	N/A	N/A	N/A	N/A	Jefferson	N/A	N/A	0
467.03	172 South-west	N/A	N/A	N/A	N/A	N/A	N/A	N/A	Jefferson	N/A	N/A	0
467.45	3 South-west	N/A	N/A	N/A	N/A	N/A	N/A	N/A	Jefferson	N/A	N/A	0
469.48	399 North	N/A	N/A	N/A	N/A	N/A	N/A	N/A	Jefferson	N/A	N/A	0
470.97	146 South	N/A	N/A	N/A	N/A	N/A	N/A	N/A	Jefferson	N/A	N/A	0
471.26	377 South	N/A	N/A	N/A	N/A	N/A	N/A	N/A	Jefferson	N/A	N/A	0
471.88	70 South	N/A	N/A	N/A	N/A	N/A	N/A	N/A	Jefferson	N/A	N/A	0
472.65	266 South	N/A	N/A	N/A	N/A	N/A	N/A	N/A	Jefferson	N/A	N/A	0
474.82	212 South	N/A	N/A	N/A	N/A	N/A	N/A	N/A	Jefferson	N/A	N/A	0
475.63	331 South-west	N/A	N/A	N/A	N/A	N/A	N/A	N/A	Jefferson	N/A	N/A	0
477.13	166 North-east	N/A	N/A	N/A	N/A	N/A	N/A	N/A	Jefferson	N/A	N/A	0
Houston Lateral												
12.87	205 North-west	N/A	-94.71457	30.05373	N/A	N/A	N/A	N/A	N/A	Liberty	N/A	N/A
13.35	87 North-west	08120549	-94.71672	30.04684	N/A	N/A	N/A	N/A	N/A	Liberty	N/A	N/A
13.39	205 North-west	08122635	-94.71810	30.04675	N/A	N/A	N/A	N/A	N/A	Liberty	N/A	N/A
13.39	393 South-east	N/A	-94.71250	30.04444	N/A	N/A	N/A	N/A	N/A	Liberty	N/A	N/A
13.64	46 North-west	N/A	-94.71833	30.04278	N/A	N/A	N/A	N/A	N/A	Liberty	N/A	N/A
13.94	89 South-east	08100252	-94.71908	30.03834	N/A	N/A	N/A	N/A	N/A	Liberty	N/A	N/A
14.17	1 Southeast	N/A	-94.72147	30.03562	N/A	N/A	N/A	N/A	N/A	Liberty	N/A	N/A
14.23	298 South-east	08101196	-94.71906	30.03374	N/A	N/A	N/A	N/A	N/A	Liberty	N/A	N/A
14.49	246 South-east	08100938	-94.72134	30.03044	N/A	N/A	N/A	N/A	N/A	Liberty	N/A	N/A
14.69	332 South-east	08121343	-94.72184	30.02755	N/A	N/A	N/A	N/A	N/A	Liberty	N/A	N/A
14.87	365 Northwest	08106220	-94.72972	30.02759	N/A	N/A	N/A	N/A	N/A	Liberty	N/A	N/A
15.10	43 North-west	08122577	-94.72820	30.02343	N/A	N/A	N/A	N/A	N/A	Liberty	N/A	N/A

16.09	242 North-west	08121832	-94.73689	30.01106	N/A	N/A	N/A	N/A	N/A	Liberty	N/A	N/A
18.34	332 South-east	13310405	-94.75988	29.98812	N/A	N/A	N/A	N/A	N/A	Liberty	N/A	N/A
22.98	124 South	N/A	-94.82750	29.95759	N/A	N/A	N/A	N/A	N/A	Liberty	N/A	N/A
25.11	214 West	N/A	-94.85114	29.94346	N/A	N/A	N/A	N/A	N/A	Liberty	N/A	N/A
25.98	86 North-west	N/A	-94.85266	29.93214	N/A	N/A	N/A	N/A	N/A	Liberty	N/A	N/A
27.80	311 South-east	N/A	-94.87146	29.91110	N/A	N/A	N/A	N/A	N/A	Liberty	N/A	N/A
32.12	118 South-east	N/A	-94.93151	29.87845	N/A	N/A	N/A	N/A	N/A	Chambers	N/A	N/A
32.30	310 South-east	N/A	-94.93075	29.87610	N/A	N/A	N/A	N/A	N/A	Chambers	N/A	N/A
34.34	222 North	N/A	-94.95827	29.86371	N/A	N/A	N/A	N/A	N/A	Chambers	N/A	N/A
35.05	309 South	N/A	-94.96898	29.85739	N/A	N/A	N/A	N/A	N/A	Harris	N/A	N/A
35.27	25 South	13300877	-94.97313	29.85937	N/A	N/A	N/A	N/A	N/A	Harris	N/A	N/A
35.71	179 South	13320408	-94.98023	29.85701	N/A	N/A	N/A	N/A	N/A	Harris	N/A	N/A
35.84	176 North	N/A	-94.98267	29.86004	N/A	N/A	N/A	N/A	N/A	Harris	N/A	N/A
35.91	106 North	N/A	-94.98382	29.85930	N/A	N/A	N/A	N/A	N/A	Harris	N/A	N/A
35.92	36 South	N/A	-94.98386	29.85802	N/A	N/A	N/A	N/A	N/A	Harris	N/A	N/A
36.13	255 North	N/A	-94.98761	29.86035	N/A	N/A	N/A	N/A	N/A	Harris	N/A	N/A
36.33	273 South	N/A	-94.99031	29.85532	N/A	N/A	N/A	N/A	N/A	Harris	N/A	N/A
36.39	312 North	13320419	-94.99200	29.86047	N/A	N/A	N/A	N/A	N/A	Harris	N/A	N/A
36.43	4 North	13320438	-94.99230	29.85765	N/A	N/A	N/A	N/A	N/A	Harris	N/A	N/A
36.44	248 South	N/A	-94.99224	29.85537	N/A	N/A	N/A	N/A	N/A	Harris	N/A	N/A
38.58	354 North	N/A	-95.02413	29.85345	N/A	N/A	N/A	N/A	N/A	Harris	N/A	N/A
38.84	112 South	N/A	-95.02720	29.84842	N/A	N/A	N/A	N/A	N/A	Harris	N/A	N/A
38.95	300 North	N/A	-95.02997	29.85170	N/A	N/A	N/A	N/A	N/A	Harris	N/A	N/A
39.00	1 North	13303180	-95.03009	29.84889	N/A	N/A	N/A	N/A	N/A	Harris	N/A	N/A
39.16	329 North	13303182	-95.03316	29.85137	N/A	N/A	N/A	N/A	N/A	Harris	N/A	N/A
39.38	273 North	N/A	-95.03641	29.85062	N/A	N/A	N/A	N/A	N/A	Harris	N/A	N/A
39.38	69 North	N/A	-95.03638	29.84878	N/A	N/A	N/A	N/A	N/A	Harris	N/A	N/A
39.42	65 North	N/A	-95.03698	29.84872	N/A	N/A	N/A	N/A	N/A	Harris	N/A	N/A
39.54	263 South	N/A	-95.03890	29.84571	N/A	N/A	N/A	N/A	N/A	Harris	N/A	N/A
39.62	299 South	N/A	-95.04018	29.84535	N/A	N/A	N/A	N/A	N/A	Harris	N/A	N/A
39.73	261 South	N/A	-95.04196	29.84564	N/A	N/A	N/A	N/A	N/A	Harris	N/A	N/A
39.76	272 South	N/A	-95.04256	29.84553	N/A	N/A	N/A	N/A	N/A	Harris	N/A	N/A
41.75	26 North	13370351	-95.07570	29.84786	N/A	N/A	N/A	N/A	N/A	Harris	N/A	N/A
41.81	342 South	13323342	-95.07673	29.84452	N/A	N/A	N/A	N/A	N/A	Harris	N/A	N/A
43.94	220 South-east	13323440	-95.09948	29.82547	N/A	N/A	N/A	N/A	N/A	Harris	N/A	N

44.18	380 South-east	N/A	-95.10116	29.82194	N/A	N/A	N/A	N/A	N/A	Harris	N/A	N/A
45.92	151 South	06300244	-95.13034	29.81769	N/A	N/A	N/A	N/A	N/A	Harris	N/A	N/A
	205 North-west	N/A	-94.71457	30.05373	N/A	N/A	N/A	N/A	Lincoln	17 N-5 E-22	SESESE	3538

Source: South Dakota Department of Natural Resources, Oil and Gas Section (2008)
Texas Railroad Commission 2008
Oklahoma State University 2008

1. P&A – Plugged and Abandoned
2. RE – Re-entered
3. TA -
4. P – Producing
5. INJ - Injecting
6. WC – Wildcat, no field designation

Appendix K –

Milepost to Milepost Soils Table

Appendix K – Soils by Milepost – Steele City Segment

Pipeline Segment	State	County	Beginning Milepost	Ending Milepost	Miles	Soil Series	Soil Series Name	Wind (miles)	Water (miles)	Low revegetation on Potential (miles)	Prime Farmland (miles)	Hydric Soils (miles)	Compaction on Prone (miles)	Stoney – Rocky (miles)	Shallow Bedrock (miles)	Droghty (miles)
Steele City	MT	Phillips	0.000	0.740	0.740	MT641	Kevin-Scobey-Phillips association, 2 to 15 percent slopes	0.000	0.503	0.200	0.000	0.015	0.740	0.355	0.000	0.000
Steele City	MT	Phillips	0.740	0.752	0.013	MT641	Scobey-Kevin clay loams, 2 to 8 percent slopes	0.000	0.000	0.001	0.013	0.000	0.013	0.000	0.000	0.000
Steele City	MT	Phillips	0.752	0.877	0.124	MT641	Scobey-Kevin complex, 2 to 8 percent slopes	0.000	0.000	0.009	0.000	0.002	0.120	0.105	0.000	0.000
Steele City	MT	Phillips	0.877	1.082	0.205	MT641	Phillips loam, 0 to 4 percent slopes	0.000	0.000	0.205	0.205	0.002	0.205	0.000	0.000	0.000
Steele City	MT	Phillips	1.082	1.242	0.160	MT641	Evanston loam, 0 to 4 percent slopes	0.000	0.000	0.011	0.160	0.000	0.155	0.000	0.000	0.000
Steele City	MT	Phillips	1.242	1.492	0.250	MT641	Scobey clay loam, 0 to 4 percent slopes	0.000	0.000	0.015	0.250	0.003	0.250	0.000	0.000	0.000
Steele City	MT	Phillips	1.492	1.582	0.090	MT641	Scobey-Phillips complex, 0 to 4 percent slopes	0.000	0.000	0.045	0.090	0.001	0.090	0.000	0.000	0.000
Steele City	MT	Phillips	1.582	1.717	0.135	MT641	Phillips loam, 0 to 4 percent slopes	0.000	0.000	0.135	0.135	0.001	0.135	0.000	0.000	0.000
Steele City	MT	Phillips	1.717	2.061	0.344	MT641	Scobey clay loam, 0 to 4 percent slopes	0.000	0.000	0.021	0.344	0.003	0.344	0.000	0.000	0.000
Steele City	MT	Phillips	2.061	2.275	0.214	MT641	Scobey-Phillips complex, 0 to 4 percent slopes	0.000	0.000	0.107	0.214	0.002	0.214	0.000	0.000	0.000
Steele City	MT	Phillips	2.275	2.527	0.252	MT641	Ethridge clay loam, 0 to 4 percent slopes	0.000	0.000	0.239	0.252	0.000	0.252	0.000	0.000	0.000
Steele City	MT	Phillips	2.527	3.740	1.213	MT641	Kevin-Scobey-Phillips association, 2 to 15 percent slopes	0.000	0.825	0.328	0.000	0.024	1.213	0.582	0.000	0.000
Steele City	MT	Phillips	3.740	3.999	0.259	MT641	Scobey-Kevin complex, 2 to 8 percent slopes	0.000	0.000	0.018	0.000	0.005	0.252	0.220	0.000	0.000
Steele City	MT	Phillips	3.999	5.949	1.949	MT641	Phillips-Kevin, gravelly complex, 2 to 8 percent slopes	0.000	0.000	1.092	1.949	0.019	1.949	0.858	0.000	0.000
Steele City	MT	Phillips	5.949	6.179	0.231	MT641	Scobey-Kevin complex, 2 to 8 percent slopes	0.000	0.000	0.016	0.000	0.005	0.224	0.196	0.000	0.000
Steele City	MT	Phillips	6.179	6.465	0.285	MT641	Scobey-Phillips complex, 0 to 4 percent slopes	0.000	0.000	0.143	0.285	0.003	0.285	0.000	0.000	0.000
Steele City	MT	Phillips	6.465	6.865	0.401	MT641	Scobey-Kevin complex, 2 to 8 percent slopes	0.000	0.000	0.028	0.000	0.008	0.389	0.341	0.000	0.000
Steele City	MT	Phillips	6.865	7.147	0.282	MT641	Scobey-Phillips complex, 0 to 4 percent slopes	0.000	0.000	0.141	0.282	0.003	0.282	0.000	0.000	0.000
Steele City	MT	Phillips	7.147	7.761	0.614	MT641	Scobey-Kevin complex, 2 to 8 percent slopes	0.000	0.000	0.043	0.000	0.012	0.595	0.522	0.000	0.000
Steele City	MT	Phillips	7.761	7.949	0.188	MT641	Scobey-Kevin clay loams, 2 to 8 percent slopes	0.000	0.000	0.019	0.188	0.004	0.188	0.000	0.000	0.000
Steele City	MT	Phillips	7.949	8.074	0.125	MT641	Sunburst-Kevin gravelly clay loams, 8 to 15 percent slopes	0.000	0.109	0.073	0.125	0.001	0.125	0.118	0.000	0.000
Steele City	MT	Phillips	8.074	8.148	0.074	MT641	Evanston loam, 0 to 4 percent slopes	0.000	0.000	0.005	0.074	0.000	0.071	0.000	0.000	0.000
Steele City	MT	Phillips	8.148	8.276	0.128	MT641	Sunburst-Kevin gravelly clay loams, 8 to 15 percent slopes	0.000	0.111	0.074	0.128	0.001	0.128	0.120	0.000	0.000
Steele City	MT	Phillips	8.276	8.364	0.088	MT641	Evanston loam, 0 to 4 percent slopes	0.000	0.000	0.006	0.088	0.000	0.086	0.000	0.000	0.000
Steele City	MT	Phillips	8.364	8.606	0.242	MT641	Phillips-Elloam complex, 0 to 4 percent slopes	0.000	0.000	0.230	0.000	0.002	0.242	0.000	0.000	0.000
Steele City	MT	Phillips	8.606	9.057	0.451	MT641	Evanston loam, 0 to 4 percent slopes	0.000	0.000	0.032	0.451	0.000	0.438	0.000	0.000	0.000
Steele City	MT	Phillips	9.057	9.118	0.062	MT641	Creed-Gerdrum complex, 0 to 4 percent slopes	0.000	0.000	0.062	0.000	0.000	0.062	0.000	0.000	0.000
Steele City	MT	Phillips	9.118	9.255	0.137	MT641	Scobey-Kevin complex, 2 to 8 percent slopes	0.000	0.000	0.010	0.000	0.003	0.133	0.116	0.000	0.000
Steele City	MT	Phillips	9.255	9.442	0.187	MT641	Scobey-Kevin clay loams, 2 to 8 percent slopes	0.000	0.000	0.019	0.187	0.004	0.187	0.000	0.000	0.000
Steele City	MT	Phillips	9.442	9.670	0.228	MT641	Kevin-Sunburst clay loams, 2 to 8 percent slopes	0.000	0.007	0.091	0.228	0.005	0.228	0.094	0.000	0.000
Steele City	MT	Phillips	9.670	9.736	0.066	MT641	Phillips-Elloam complex, 0 to 4 percent slopes	0.000	0.000	0.063	0.000	0.001	0.066	0.000	0.000	0.000
Steele City	MT	Phillips	9.736	9.838	0.102	MT641	Kevin-Sunburst clay loams, 2 to 8 percent slopes	0.000	0.003	0.041	0.102	0.002	0.102	0.042	0.000	0.000
Steele City	MT	Phillips	9.838	10.093	0.255	MT641	Scobey-Kevin-Elloam clay loams, 2 to 8 percent slopes	0.000	0.008	0.069	0.000	0.005	0.255	0.000	0.000	0.000
Steele City	MT	Phillips	10.093	10.199	0.106	MT641	Sunburst-Bascovy-Weingart complex, 2 to 8 percent slopes	0.000	0.000	0.101	0.000	0.000	0.106	0.069	0.000	0.000
Steele City	MT	Phillips	10.199	10.246	0.047	MT641	Scobey-Kevin-Elloam clay loams, 2 to 8 percent slopes	0.000	0.001	0.013	0.000	0.001	0.047	0.000	0.000	0.000

Appendix K – Soils by Milepost – Steele City Segment

Pipeline Segment	State	County	Beginning Milepost	Ending Milepost	Miles	Soil Series	Soil Series Name	Wind (miles)	Water (miles)	Low revegetation on Potential (miles)	Prime Farmland (miles)	Hydric Soils (miles)	Compaction on Prone (miles)	Stoney – Rocky (miles)	Shallow Bedrock (miles)	Droghty (miles)
Steele City	MT	Phillips	10.246	10.453	0.207	MT641	Sunburst-Bascovy-Weingart complex, 2 to 8 percent slopes	0.000	0.000	0.197	0.000	0.000	0.207	0.134	0.000	0.000
Steele City	MT	Phillips	10.453	10.463	0.011	MT641	Scobey-Kevin-Elloam clay loams, 2 to 8 percent slopes	0.000	0.000	0.003	0.000	0.000	0.011	0.000	0.000	0.000
Steele City	MT	Phillips	10.463	10.955	0.492	MT641	Kevin-Scobey-Phillips association, 2 to 15 percent slopes	0.000	0.334	0.133	0.000	0.010	0.492	0.236	0.000	0.000
Steele City	MT	Phillips	10.955	11.019	0.064	MT641	Bascovy-Neldore clays, 2 to 8 percent slopes	0.000	0.000	0.063	0.000	0.000	0.064	0.021	0.000	0.000
Steele City	MT	Phillips	11.019	11.549	0.530	MT641	Kevin-Scobey-Phillips association, 2 to 15 percent slopes	0.000	0.360	0.143	0.000	0.011	0.530	0.254	0.000	0.000
Steele City	MT	Phillips	11.549	12.088	0.539	MT641	Neldore-Bascovy clays, 4 to 15 percent slopes	0.000	0.485	0.528	0.000	0.000	0.539	0.340	0.000	0.000
Steele City	MT	Phillips	12.088	12.406	0.319	MT641	Sunburst-Kevin gravelly clay loams, 8 to 15 percent slopes	0.000	0.277	0.185	0.319	0.003	0.319	0.299	0.000	0.000
Steele City	MT	Phillips	12.406	12.523	0.117	MT641	Phillips-Elloam complex, 0 to 4 percent slopes	0.000	0.000	0.111	0.000	0.001	0.117	0.000	0.000	0.000
Steele City	MT	Phillips	12.523	13.066	0.543	MT641	Scobey-Kevin-Elloam clay loams, 2 to 8 percent slopes	0.000	0.016	0.147	0.000	0.011	0.543	0.000	0.000	0.000
Steele City	MT	Phillips	13.066	13.152	0.086	MT641	Neldore-Bascovy-Rock outcrop association, 8 to 60 percent slopes	0.000	0.069	0.065	0.000	0.000	0.086	0.039	0.000	0.000
Steele City	MT	Phillips	13.152	13.467	0.314	MT641	Phillips-Elloam complex, 0 to 4 percent slopes	0.000	0.000	0.299	0.000	0.003	0.314	0.000	0.000	0.000
Steele City	MT	Phillips	13.467	13.556	0.089	MT641	Sunburst-Kevin gravelly clay loams, 8 to 15 percent slopes	0.000	0.078	0.052	0.089	0.001	0.089	0.084	0.000	0.000
Steele City	MT	Phillips	13.556	13.575	0.019	MT641	Neldore-Bascovy-Rock outcrop association, 8 to 60 percent slopes	0.000	0.016	0.015	0.000	0.000	0.019	0.009	0.000	0.000
Steele City	MT	Phillips	13.575	13.693	0.118	MT641	Sunburst-Kevin gravelly clay loams, 8 to 15 percent slopes	0.000	0.102	0.068	0.118	0.001	0.118	0.111	0.000	0.000
Steele City	MT	Phillips	13.693	13.858	0.165	MT641	Neldore-Bascovy-Rock outcrop association, 8 to 60 percent slopes	0.000	0.132	0.124	0.000	0.000	0.165	0.074	0.000	0.000
Steele City	MT	Phillips	13.858	14.416	0.558	MT641	Scobey-Kevin-Elloam clay loams, 2 to 8 percent slopes	0.000	0.017	0.151	0.000	0.011	0.558	0.000	0.000	0.000
Steele City	MT	Phillips	14.416	15.376	0.960	MT641	Hillon-Kevin complex, 8 to 15 percent slopes	0.000	0.950	0.048	0.000	0.010	0.960	0.921	0.000	0.000
Steele City	MT	Phillips	15.376	15.471	0.095	MT641	Bascovy-Neldore-Weingart clays, 8 to 25 percent slopes	0.000	0.092	0.095	0.000	0.000	0.095	0.047	0.000	0.000
Steele City	MT	Phillips	15.471	15.487	0.017	MT641	Sunburst-Kevin gravelly clay loams, 8 to 15 percent slopes	0.000	0.015	0.010	0.017	0.000	0.017	0.016	0.000	0.000
Steele City	MT	Phillips	15.487	15.504	0.017	MT641	Sunburst-Kevin complex, 15 to 45 percent slopes	0.000	0.017	0.010	0.000	0.000	0.017	0.016	0.000	0.000
Steele City	MT	Phillips	15.504	15.516	0.011	MT641	Sunburst-Kevin gravelly clay loams, 8 to 15 percent slopes	0.000	0.010	0.006	0.011	0.000	0.011	0.010	0.000	0.000
Steele City	MT	Phillips	15.516	15.857	0.342	MT641	Sunburst-Kevin complex, 15 to 45 percent slopes	0.000	0.342	0.195	0.000	0.000	0.342	0.321	0.000	0.000
Steele City	MT	Phillips	15.857	16.254	0.397	MT641	Scobey-Kevin-Elloam clay loams, 2 to 8 percent slopes	0.000	0.012	0.107	0.000	0.008	0.397	0.000	0.000	0.000
Steele City	MT	Phillips	16.254	16.402	0.148	MT641	Sunburst-Neldore association, 15 to 45 percent slopes	0.000	0.133	0.141	0.000	0.000	0.148	0.118	0.000	0.000
Steele City	MT	Phillips	16.402	16.584	0.181	MT641	Neldore-Bascovy-Rock outcrop association, 8 to 60 percent slopes	0.000	0.145	0.136	0.000	0.000	0.181	0.082	0.000	0.000
Steele City	MT	Phillips	16.584	16.804	0.220	MT641	Scobey-Kevin-Elloam clay loams, 2 to 8 percent slopes	0.000	0.007	0.059	0.000	0.004	0.220	0.000	0.000	0.000
Steele City	MT	Phillips	16.804	16.868	0.064	MT641	Sunburst-Kevin gravelly clay loams, 8 to 15 percent	0.000	0.056	0.037	0.064	0.001	0.064	0.060	0.000	0.000

Appendix K – Soils by Milepost – Steele City Segment

Pipeline Segment	State	County	Beginning Milepost	Ending Milepost	Miles	Soil Series	Soil Series Name	Wind (miles)	Water (miles)	Low revegetation on Potential (miles)	Prime Farmland (miles)	Hydric Soils (miles)	Compaction on Prone (miles)	Stoney – Rocky (miles)	Shallow Bedrock (miles)	Droghty (miles)
							slopes									
Steele City	MT	Phillips	16.868	16.985	0.118	MT641	Kevin-Hillon complex, 2 to 8 percent slopes	0.000	0.002	0.006	0.000	0.002	0.118	0.004	0.000	0.000
Steele City	MT	Phillips	16.985	17.055	0.070	MT641	Sunburst-Kevin gravelly clay loams, 8 to 15 percent slopes	0.000	0.061	0.041	0.070	0.001	0.070	0.066	0.000	0.000
Steele City	MT	Phillips	17.055	17.093	0.037	MT641	Kevin-Hillon complex, 2 to 8 percent slopes	0.000	0.001	0.002	0.000	0.001	0.037	0.001	0.000	0.000
Steele City	MT	Phillips	17.093	17.214	0.121	MT641	Marvan-Gerdrum association, 2 to 15 percent slopes	0.000	0.073	0.121	0.000	0.000	0.121	0.000	0.000	0.000
Steele City	MT	Phillips	17.214	17.357	0.143	MT641	Kevin-Hillon complex, 2 to 8 percent slopes	0.000	0.003	0.007	0.000	0.003	0.143	0.004	0.000	0.000
Steele City	MT	Phillips	17.357	17.717	0.360	MT641	Scobey-Kevin-Elloam clay loams, 2 to 8 percent slopes	0.000	0.011	0.097	0.000	0.007	0.360	0.000	0.000	0.000
Steele City	MT	Phillips	17.717	17.866	0.150	MT641	Kevin-Hillon complex, 2 to 8 percent slopes	0.000	0.003	0.007	0.000	0.003	0.150	0.004	0.000	0.000
Steele City	MT	Phillips	17.866	17.898	0.032	MT641	Sunburst-Bascovy-Neldore complex, 8 to 35 percent slopes	0.000	0.028	0.030	0.000	0.000	0.032	0.020	0.000	0.000
Steele City	MT	Phillips	17.898	18.003	0.105	MT641	Kevin-Hillon complex, 2 to 8 percent slopes	0.000	0.002	0.005	0.000	0.002	0.105	0.003	0.000	0.000
Steele City	MT	Phillips	18.003	18.269	0.266	MT641	Scobey-Kevin clay loams, 2 to 8 percent slopes	0.000	0.000	0.027	0.266	0.005	0.266	0.000	0.000	0.000
Steele City	MT	Phillips	18.269	18.345	0.076	MT641	Phillips-Elloam complex, 0 to 4 percent slopes	0.000	0.000	0.072	0.000	0.001	0.076	0.000	0.000	0.000
Steele City	MT	Phillips	18.345	18.435	0.090	MT641	Scobey-Kevin clay loams, 2 to 8 percent slopes	0.000	0.000	0.009	0.090	0.002	0.090	0.000	0.000	0.000
Steele City	MT	Phillips	18.435	18.492	0.057	MT641	Phillips-Elloam complex, 0 to 4 percent slopes	0.000	0.000	0.054	0.000	0.001	0.057	0.000	0.000	0.000
Steele City	MT	Phillips	18.492	18.543	0.050	MT641	Scobey-Kevin clay loams, 2 to 8 percent slopes	0.000	0.000	0.005	0.050	0.001	0.050	0.000	0.000	0.000
Steele City	MT	Phillips	18.543	18.543	0.000	MT641	Phillips-Elloam complex, 0 to 4 percent slopes	0.000	0.000	0.000	0.000	0.000	0.000	0.000	0.000	0.000
Steele City	MT	Phillips	18.543	18.576	0.033	MT641	Bascovy-Neldore clays, 2 to 8 percent slopes	0.000	0.000	0.033	0.000	0.000	0.033	0.011	0.000	0.000
Steele City	MT	Phillips	18.576	18.599	0.023	MT641	Phillips-Elloam complex, 0 to 4 percent slopes	0.000	0.000	0.021	0.000	0.000	0.023	0.000	0.000	0.000
Steele City	MT	Phillips	18.599	18.800	0.201	MT641	Bascovy-Neldore clays, 2 to 8 percent slopes	0.000	0.000	0.197	0.000	0.000	0.201	0.066	0.000	0.000
Steele City	MT	Phillips	18.800	19.359	0.560	MT641	Scobey-Kevin complex, 2 to 8 percent slopes	0.000	0.000	0.039	0.000	0.011	0.560	0.476	0.000	0.000
Steele City	MT	Phillips	19.359	19.694	0.334	MT641	Twilight-Cabbart-Marmarth association, 4 to 15 percent slopes	0.000	0.177	0.161	0.000	0.000	0.334	0.017	0.000	0.000
Steele City	MT	Phillips	19.694	19.793	0.099	MT641	Phillips-Kevin complex, 2 to 8 percent slopes	0.000	0.000	0.060	0.099	0.001	0.099	0.000	0.000	0.000
Steele City	MT	Phillips	19.793	19.833	0.040	MT641	Sunburst-Bascovy-Weingart complex, 2 to 8 percent slopes	0.000	0.000	0.038	0.000	0.000	0.040	0.026	0.000	0.000
Steele City	MT	Phillips	19.833	20.058	0.226	MT641	Phillips-Kevin complex, 2 to 8 percent slopes	0.000	0.000	0.135	0.226	0.002	0.226	0.000	0.000	0.000
Steele City	MT	Phillips	20.058	20.300	0.242	MT641	Scobey-Kevin clay loams, 2 to 8 percent slopes	0.000	0.000	0.024	0.242	0.005	0.242	0.000	0.000	0.000
Steele City	MT	Phillips	20.300	20.380	0.080	MT641	Phillips-Kevin complex, 2 to 8 percent slopes	0.000	0.000	0.048	0.080	0.001	0.080	0.000	0.000	0.000
Steele City	MT	Phillips	20.380	20.735	0.355	MT641	Scobey-Kevin complex, 2 to 8 percent slopes	0.000	0.000	0.025	0.000	0.007	0.355	0.301	0.000	0.000
Steele City	MT	Phillips	20.735	20.777	0.043	MT641	Hillon-Cabbart-Rock outcrop association, 15 to 65 percent slopes	0.000	0.035	0.003	0.000	0.000	0.043	0.003	0.000	0.000
Steele City	MT	Phillips	20.777	20.831	0.054	MT641	Harlake clay, 0 to 2 percent slopes	0.000	0.000	0.053	0.054	0.001	0.054	0.000	0.000	0.000
Steele City	MT	Phillips	20.831	21.118	0.287	MT641	Hillon-Kevin complex, 8 to 15 percent slopes	0.000	0.284	0.014	0.000	0.003	0.287	0.275	0.000	0.000
Steele City	MT	Phillips	21.118	21.327	0.209	MT641	Scobey-Kevin complex, 2 to 8 percent slopes	0.000	0.000	0.015	0.000	0.004	0.209	0.177	0.000	0.000
Steele City	MT	Phillips	21.327	21.359	0.032	MT641	Hillon-Cabbart-Rock outcrop association, 15 to 65 percent slopes	0.000	0.026	0.002	0.000	0.000	0.032	0.002	0.000	0.000
Steele City	MT	Phillips	21.359	21.477	0.118	MT641	Havre-Harlake-Glendive complex, 0 to 2 percent slopes	0.000	0.000	0.009	0.118	0.000	0.118	0.000	0.000	0.000
Steele City	MT	Phillips	21.477	21.587	0.110	MT641	Hillon-Cabbart-Rock outcrop association, 15 to 65 percent slopes	0.000	0.090	0.008	0.000	0.000	0.110	0.007	0.000	0.000
Steele City	MT	Phillips	21.587	21.628	0.041	MT641	Scobey-Kevin complex, 2 to 8 percent slopes	0.000	0.000	0.003	0.000	0.001	0.041	0.035	0.000	0.000
Steele City	MT	Phillips	21.628	21.653	0.025	MT641	Hillon-Cabbart-Rock outcrop association, 15 to 65	0.000	0.020	0.002	0.000	0.000	0.025	0.001	0.000	0.000

Appendix K – Soils by Milepost – Steele City Segment

Pipeline Segment	State	County	Beginning Milepost	Ending Milepost	Miles	Soil Series	Soil Series Name	Wind (miles)	Water (miles)	Low revegetation on Potential (miles)	Prime Farmland (miles)	Hydric Soils (miles)	Compaction on Prone (miles)	Stoney – Rocky (miles)	Shallow Bedrock (miles)	Droghty (miles)
							percent slopes									
Steele City	MT	Phillips	21.653	21.826	0.173	MT641	Hillon-Kevin complex, 8 to 15 percent slopes	0.000	0.171	0.009	0.000	0.002	0.173	0.166	0.000	0.000
Steele City	MT	Phillips	21.826	22.026	0.201	MT641	Phillips-Kevin complex, 2 to 8 percent slopes	0.000	0.000	0.120	0.201	0.002	0.201	0.000	0.000	0.000
Steele City	MT	Phillips	22.026	22.082	0.056	MT641	Hillon-Cabbart-Rock outcrop association, 15 to 65 percent slopes	0.000	0.046	0.004	0.000	0.000	0.056	0.003	0.000	0.000
Steele City	MT	Phillips	22.082	22.924	0.842	MT641	Scobey-Kevin clay loams, 2 to 8 percent slopes	0.000	0.000	0.084	0.842	0.017	0.842	0.000	0.000	0.000
Steele City	MT	Phillips	22.924	22.979	0.055	MT641	Scobey-Kevin-Elloam clay loams, 2 to 8 percent slopes	0.000	0.002	0.015	0.000	0.001	0.055	0.000	0.000	0.000
Steele City	MT	Phillips	22.979	23.956	0.977	MT641	Scobey-Kevin clay loams, 2 to 8 percent slopes	0.000	0.000	0.098	0.977	0.020	0.977	0.000	0.000	0.000
Steele City	MT	Phillips	23.956	24.037	0.082	MT641	Hillon-Cabbart-Rock outcrop association, 15 to 65 percent slopes	0.000	0.067	0.006	0.000	0.000	0.082	0.005	0.000	0.000
Steele City	MT	Phillips	24.037	24.534	0.497	MT641	Scobey-Kevin clay loams, 2 to 8 percent slopes	0.000	0.000	0.050	0.497	0.010	0.497	0.000	0.000	0.000
Steele City	MT	Phillips	24.534	25.227	0.692	MT641	Telstad-Joplin loams, 2 to 8 percent slopes	0.000	0.000	0.623	0.692	0.007	0.692	0.242	0.000	0.000
Steele City	MT	Phillips	25.227	25.401	0.175	MT641	Hillon-Cabbart-Rock outcrop association, 15 to 65 percent slopes	0.000	0.143	0.012	0.000	0.000	0.175	0.010	0.000	0.000
Steele City	MT	Phillips	25.401	25.456	0.055	MT641	Yamacall loam, 2 to 8 percent slopes	0.000	0.001	0.053	0.055	0.000	0.055	0.000	0.000	0.000
Steele City	MT	Phillips	25.456	25.504	0.048	MT641	Marvan complex, 2 to 8 percent slopes	0.000	0.000	0.048	0.000	0.000	0.048	0.000	0.000	0.000
Steele City	MT	Phillips	25.504	25.800	0.296	MT641	Harlake-Havre clay loams, 0 to 2 percent slopes	0.000	0.000	0.192	0.296	0.006	0.296	0.000	0.000	0.000
Steele City	MT	Valley	25.800	26.045	0.245	MT105	Typic Fluvaquents, gently sloping	0.000	0.000	0.049	0.000	0.025	0.245	0.196	0.000	0.000
Steele City	MT	Valley	26.045	26.097	0.051	MT105	Cabbart-Delpoint complex, 9 to 35 percent slopes	0.000	0.049	0.044	0.000	0.000	0.051	0.000	0.000	0.000
Steele City	MT	Valley	26.097	26.146	0.049	MT105	Sunburst clay loam, 9 to 35 percent slopes	0.000	0.049	0.045	0.000	0.000	0.049	0.039	0.000	0.000
Steele City	MT	Valley	26.146	27.312	1.166	MT105	Phillips-Scobey complex, 2 to 9 percent slopes	0.000	1.026	0.816	0.000	0.012	1.166	0.093	0.000	0.000
Steele City	MT	Valley	27.312	27.724	0.413	MT105	Scobey-Sunburst clay loams, 5 to 25 percent slopes	0.000	0.400	0.190	0.000	0.000	0.413	0.124	0.000	0.000
Steele City	MT	Valley	27.724	27.806	0.082	MT105	Phillips-Scobey complex, 2 to 9 percent slopes	0.000	0.072	0.057	0.000	0.001	0.082	0.007	0.000	0.000
Steele City	MT	Valley	27.806	27.868	0.062	MT105	Sunburst clay loam, 9 to 35 percent slopes	0.000	0.062	0.057	0.000	0.000	0.062	0.050	0.000	0.000
Steele City	MT	Valley	27.868	28.242	0.374	MT105	Phillips-Scobey complex, 2 to 9 percent slopes	0.000	0.329	0.262	0.000	0.004	0.374	0.030	0.000	0.000
Steele City	MT	Valley	28.242	28.725	0.484	MT105	Phillips loam, 0 to 5 percent slopes	0.000	0.015	0.469	0.000	0.005	0.484	0.000	0.000	0.000
Steele City	MT	Valley	28.725	29.102	0.377	MT105	Phillips-Scobey complex, 2 to 9 percent slopes	0.000	0.331	0.264	0.000	0.004	0.377	0.030	0.000	0.000
Steele City	MT	Valley	29.102	29.402	0.301	MT105	Phillips-Elloam complex, 1 to 9 percent slopes	0.000	0.271	0.271	0.000	0.003	0.301	0.000	0.000	0.000
Steele City	MT	Valley	29.402	29.594	0.192	MT105	Phillips-Scobey complex, 2 to 9 percent slopes	0.000	0.169	0.134	0.000	0.002	0.192	0.015	0.000	0.000
Steele City	MT	Valley	29.594	30.086	0.491	MT105	Phillips-Elloam complex, 1 to 9 percent slopes	0.000	0.442	0.442	0.000	0.005	0.491	0.000	0.000	0.000
Steele City	MT	Valley	30.086	30.402	0.316	MT105	Phillips-Scobey complex, 2 to 9 percent slopes	0.000	0.278	0.221	0.000	0.003	0.316	0.025	0.000	0.000
Steele City	MT	Valley	30.402	30.658	0.257	MT105	Phillips-Elloam complex, 1 to 9 percent slopes	0.000	0.231	0.231	0.000	0.003	0.257	0.000	0.000	0.000
Steele City	MT	Valley	30.658	30.936	0.278	MT105	Phillips-Scobey complex, 2 to 9 percent slopes	0.000	0.245	0.195	0.000	0.003	0.278	0.022	0.000	0.000
Steele City	MT	Valley	30.936	31.324	0.388	MT105	Phillips-Elloam complex, 1 to 9 percent slopes	0.000	0.349	0.349	0.000	0.004	0.388	0.000	0.000	0.000
Steele City	MT	Valley	31.324	31.845	0.521	MT105	Phillips-Scobey complex, 2 to 9 percent slopes	0.000	0.459	0.365	0.000	0.005	0.521	0.042	0.000	0.000
Steele City	MT	Valley	31.845	32.305	0.461	MT105	Phillips-Elloam complex, 1 to 9 percent slopes	0.000	0.415	0.415	0.000	0.005	0.461	0.000	0.000	0.000
Steele City	MT	Valley	32.305	32.377	0.072	MT105	Sunburst-Lisam complex, 9 to 35 percent slopes	0.000	0.068	0.067	0.000	0.000	0.072	0.030	0.000	0.000
Steele City	MT	Valley	32.377	32.505	0.128	MT105	Elloam clay loam, 1 to 5 percent slopes	0.000	0.000	0.128	0.000	0.000	0.128	0.000	0.000	0.000
Steele City	MT	Valley	32.505	32.672	0.167	MT105	Elloam gravelly clay, 2 to 9 percent slopes	0.000	0.162	0.167	0.000	0.000	0.167	0.150	0.000	0.000
Steele City	MT	Valley	32.672	32.930	0.258	MT105	Thebo-Lisam clays, 2 to 15 percent slopes	0.000	0.240	0.253	0.000	0.000	0.258	0.000	0.000	0.000
Steele City	MT	Valley	32.930	32.954	0.024	MT105	Sunburst-Lisam complex, 9 to 35 percent slopes	0.000	0.023	0.022	0.000	0.000	0.024	0.010	0.000	0.000
Steele City	MT	Valley	32.954	33.061	0.107	MT105	Elloam clay loam, 1 to 5 percent slopes	0.000	0.000	0.107	0.000	0.000	0.107	0.000	0.000	0.000
Steele City	MT	Valley	33.061	33.862	0.801	MT105	Phillips-Elloam complex, 1 to 9 percent slopes	0.000	0.721	0.721	0.000	0.008	0.801	0.000	0.000	0.000
Steele City	MT	Valley	33.862	33.977	0.115	MT105	Scobey-Sunburst clay loams, 5 to 25 percent slopes	0.000	0.112	0.053	0.000	0.000	0.115	0.035	0.000	0.000

Appendix K – Soils by Milepost – Steele City Segment

Pipeline Segment	State	County	Beginning Milepost	Ending Milepost	Miles	Soil Series	Soil Series Name	Wind (miles)	Water (miles)	Low revegetation on Potential (miles)	Prime Farmland (miles)	Hydric Soils (miles)	Compaction on Prone (miles)	Stoney – Rocky (miles)	Shallow Bedrock (miles)	Droghty (miles)
Steele City	MT	Valley	33.977	34.609	0.632	MT105	Phillips-Elloam complex, 1 to 9 percent slopes	0.000	0.569	0.569	0.000	0.006	0.632	0.000	0.000	0.000
Steele City	MT	Valley	34.609	34.658	0.049	MT105	Lisam-Dilts clays, 5 to 35 percent slopes	0.000	0.048	0.030	0.000	0.000	0.049	0.021	0.000	0.000
Steele City	MT	Valley	34.658	34.712	0.054	MT105	Phillips-Elloam complex, 1 to 9 percent slopes	0.000	0.049	0.049	0.000	0.001	0.054	0.000	0.000	0.000
Steele City	MT	Valley	34.712	35.190	0.477	MT105	Lisam-Dilts clays, 5 to 35 percent slopes	0.000	0.468	0.286	0.000	0.005	0.477	0.205	0.000	0.000
Steele City	MT	Valley	35.190	35.340	0.150	MT105	Phillips-Elloam complex, 1 to 9 percent slopes	0.000	0.135	0.135	0.000	0.002	0.150	0.000	0.000	0.000
Steele City	MT	Valley	35.340	35.456	0.116	MT105	Lisam-Dilts clays, 5 to 35 percent slopes	0.000	0.113	0.069	0.000	0.001	0.116	0.050	0.000	0.000
Steele City	MT	Valley	35.456	35.533	0.077	MT105	Phillips loam, 0 to 5 percent slopes	0.000	0.002	0.075	0.000	0.001	0.077	0.000	0.000	0.000
Steele City	MT	Valley	35.533	35.611	0.078	MT105	Cabbart-Delpoint complex, 9 to 35 percent slopes	0.000	0.075	0.066	0.000	0.000	0.070	0.000	0.000	0.000
Steele City	MT	Valley	35.611	35.878	0.268	MT105	Phillips loam, 0 to 5 percent slopes	0.000	0.008	0.260	0.000	0.003	0.268	0.000	0.000	0.000
Steele City	MT	Valley	35.878	36.092	0.213	MT105	Sunburst-Lisam complex, 9 to 35 percent slopes	0.000	0.203	0.198	0.000	0.000	0.198	0.090	0.000	0.000
Steele City	MT	Valley	36.092	36.286	0.194	MT105	Marmarth-Cabbart loams, 5 to 25 percent slopes	0.000	0.194	0.091	0.000	0.000	0.194	0.000	0.000	0.000
Steele City	MT	Valley	36.286	36.606	0.321	MT105	Phillips-Scobey complex, 2 to 9 percent slopes	0.000	0.282	0.224	0.000	0.003	0.321	0.026	0.000	0.000
Steele City	MT	Valley	36.606	38.222	1.616	MT105	Scobey stony clay loams, 2 to 15 percent slopes	0.000	1.616	0.242	0.000	0.000	1.616	1.503	0.000	0.000
Steele City	MT	Valley	38.222	38.675	0.452	MT105	Scobey clay loam, 1 to 9 percent slopes	0.000	0.434	0.045	0.000	0.005	0.452	0.014	0.000	0.000
Steele City	MT	Valley	38.675	38.777	0.102	MT105	Cabbart-Delpoint complex, 9 to 35 percent slopes	0.000	0.098	0.087	0.000	0.000	0.092	0.000	0.000	0.000
Steele City	MT	Valley	38.777	38.873	0.096	MT105	Scobey clay loam, 1 to 9 percent slopes	0.000	0.093	0.010	0.000	0.001	0.096	0.003	0.000	0.000
Steele City	MT	Valley	38.873	39.096	0.223	MT105	Cabbart-Delpoint complex, 9 to 35 percent slopes	0.000	0.214	0.190	0.000	0.000	0.201	0.000	0.000	0.000
Steele City	MT	Valley	39.096	39.296	0.200	MT105	Ustic Torrifluvents, gently sloping	0.000	0.000	0.200	0.000	0.000	0.200	0.200	0.000	0.000
Steele City	MT	Valley	39.296	39.356	0.060	MT105	Havre-Glendive complex	0.000	0.000	0.060	0.060	0.000	0.060	0.000	0.000	0.000
Steele City	MT	Valley	39.356	39.622	0.266	MT105	Cabbart-Delpoint complex, 9 to 35 percent slopes	0.000	0.255	0.226	0.000	0.000	0.239	0.000	0.000	0.000
Steele City	MT	Valley	39.622	40.102	0.480	MT105	Telstad loam, 1 to 9 percent slopes	0.000	0.451	0.456	0.000	0.005	0.480	0.000	0.000	0.000
Steele City	MT	Valley	40.102	40.378	0.276	MT105	Cabbart-Delpoint complex, 9 to 35 percent slopes	0.000	0.265	0.235	0.000	0.000	0.248	0.000	0.000	0.000
Steele City	MT	Valley	40.378	40.806	0.428	MT105	Ustic Torrifluvents, gently sloping	0.000	0.000	0.428	0.000	0.000	0.428	0.428	0.000	0.000
Steele City	MT	Valley	40.806	40.935	0.129	MT105	Evanston loam, 2 to 9 percent slopes	0.000	0.124	0.013	0.000	0.000	0.129	0.000	0.000	0.000
Steele City	MT	Valley	40.935	41.081	0.146	MT105	Sunburst clay loam, 9 to 35 percent slopes	0.000	0.146	0.135	0.000	0.000	0.146	0.117	0.000	0.000
Steele City	MT	Valley	41.081	41.115	0.034	MT105	Lonna-Marias complex, 1 to 3 percent slopes	0.000	0.000	0.033	0.000	0.000	0.034	0.000	0.000	0.000
Steele City	MT	Valley	41.115	41.234	0.118	MT105	Sunburst clay loam, 9 to 35 percent slopes	0.000	0.118	0.109	0.000	0.000	0.118	0.095	0.000	0.000
Steele City	MT	Valley	41.234	41.469	0.235	MT105	Lonna-Marias complex, 1 to 3 percent slopes	0.000	0.000	0.228	0.000	0.000	0.235	0.000	0.000	0.000
Steele City	MT	Valley	41.469	41.531	0.063	MT105	Cabbart-Delpoint complex, 9 to 35 percent slopes	0.000	0.060	0.053	0.000	0.000	0.056	0.000	0.000	0.000
Steele City	MT	Valley	41.531	41.711	0.179	MT105	Sunburst clay loam, 9 to 35 percent slopes	0.000	0.179	0.165	0.000	0.000	0.179	0.143	0.000	0.000
Steele City	MT	Valley	41.711	42.369	0.659	MT105	Scobey clay loam, 1 to 9 percent slopes	0.000	0.632	0.066	0.000	0.007	0.659	0.020	0.000	0.000
Steele City	MT	Valley	42.369	42.454	0.085	MT105	Sunburst clay loam, 9 to 35 percent slopes	0.000	0.085	0.078	0.000	0.000	0.085	0.068	0.000	0.000
Steele City	MT	Valley	42.454	42.581	0.127	MT105	Scobey clay loam, 1 to 9 percent slopes	0.000	0.122	0.013	0.000	0.001	0.127	0.004	0.000	0.000
Steele City	MT	Valley	42.581	42.845	0.264	MT105	Scobey-Sunburst clay loams, 5 to 25 percent slopes	0.000	0.256	0.122	0.000	0.000	0.264	0.079	0.000	0.000
Steele City	MT	Valley	42.845	42.992	0.147	MT105	Evanston loam, 2 to 9 percent slopes	0.000	0.141	0.015	0.000	0.000	0.147	0.000	0.000	0.000
Steele City	MT	Valley	42.992	43.174	0.181	MT105	Marmarth-Cabbart loams, 5 to 25 percent slopes	0.000	0.181	0.085	0.000	0.000	0.181	0.000	0.000	0.000
Steele City	MT	Valley	43.174	43.262	0.088	MT105	Phillips-Scobey complex, 2 to 9 percent slopes	0.000	0.078	0.062	0.000	0.001	0.088	0.007	0.000	0.000
Steele City	MT	Valley	43.262	43.550	0.288	MT105	Phillips-Elloam complex, 1 to 9 percent slopes	0.000	0.259	0.259	0.000	0.003	0.288	0.000	0.000	0.000
Steele City	MT	Valley	43.550	43.681	0.131	MT105	Phillips loam, 0 to 5 percent slopes	0.000	0.004	0.127	0.000	0.001	0.131	0.000	0.000	0.000
Steele City	MT	Valley	43.681	44.019	0.338	MT105	Phillips-Scobey complex, 2 to 9 percent slopes	0.000	0.297	0.237	0.000	0.003	0.338	0.027	0.000	0.000
Steele City	MT	Valley	44.019	44.161	0.142	MT105	Phillips loam, 0 to 5 percent slopes	0.000	0.004	0.137	0.000	0.001	0.142	0.000	0.000	0.000
Steele City	MT	Valley	44.161	44.411	0.251	MT105	Phillips-Scobey complex, 2 to 9 percent slopes	0.000	0.220	0.175	0.000	0.003	0.251	0.020	0.000	0.000
Steele City	MT	Valley	44.411	44.492	0.080	MT105	Sunburst clay loam, 9 to 35 percent slopes	0.000	0.080	0.074	0.000	0.000	0.080	0.064	0.000	0.000
Steele City	MT	Valley	44.492	44.811	0.319	MT105	Phillips-Scobey complex, 2 to 9 percent slopes	0.000	0.281	0.223	0.000	0.003	0.319	0.026	0.000	0.000

Appendix K – Soils by Milepost – Steele City Segment

Pipeline Segment	State	County	Beginning Milepost	Ending Milepost	Miles	Soil Series	Soil Series Name	Wind (miles)	Water (miles)	Low revegetation on Potential (miles)	Prime Farmland (miles)	Hydric Soils (miles)	Compaction on Prone (miles)	Stoney – Rocky (miles)	Shallow Bedrock (miles)	Droghty (miles)
Steele City	MT	Valley	44.811	44.857	0.047	MT105	Marmarth-Cabbart loams, 5 to 25 percent slopes	0.000	0.047	0.022	0.000	0.000	0.047	0.000	0.000	0.000
Steele City	MT	Valley	44.857	44.929	0.072	MT105	Ustic Torrifluvents, gently sloping	0.000	0.000	0.072	0.000	0.000	0.072	0.072	0.000	0.000
Steele City	MT	Valley	44.929	45.078	0.149	MT105	Evanston loam, 2 to 9 percent slopes	0.000	0.143	0.015	0.000	0.000	0.149	0.000	0.000	0.000
Steele City	MT	Valley	45.078	45.214	0.136	MT105	Marmarth-Cabbart loams, 5 to 25 percent slopes	0.000	0.136	0.064	0.000	0.000	0.136	0.000	0.000	0.000
Steele City	MT	Valley	45.214	45.460	0.246	MT105	Phillips loam, 0 to 5 percent slopes	0.000	0.007	0.238	0.000	0.002	0.246	0.000	0.000	0.000
Steele City	MT	Valley	45.460	45.771	0.312	MT105	Elloam clay loam, 1 to 5 percent slopes	0.000	0.000	0.312	0.000	0.000	0.312	0.000	0.000	0.000
Steele City	MT	Valley	45.771	45.842	0.071	MT105	Marias clay, 1 to 9 percent slopes	0.000	0.068	0.071	0.000	0.000	0.071	0.001	0.000	0.000
Steele City	MT	Valley	45.842	46.153	0.311	MT105	Thebo clay, 2 to 9 percent slopes	0.000	0.311	0.311	0.000	0.000	0.311	0.000	0.000	0.000
Steele City	MT	Valley	46.153	46.189	0.036	MT105	Thoeny-Phillips complex, 1 to 5 percent slopes	0.000	0.000	0.036	0.000	0.000	0.036	0.000	0.000	0.000
Steele City	MT	Valley	46.189	46.322	0.134	MT105	Lisam-Dilts clays, 5 to 35 percent slopes	0.000	0.131	0.080	0.000	0.001	0.134	0.057	0.000	0.000
Steele City	MT	Valley	46.322	46.617	0.294	MT105	Thoeny-Phillips complex, 1 to 5 percent slopes	0.000	0.000	0.294	0.000	0.003	0.294	0.000	0.000	0.000
Steele City	MT	Valley	46.617	46.931	0.314	MT105	Sunburst-Lisam complex, 9 to 35 percent slopes	0.000	0.299	0.292	0.000	0.000	0.292	0.132	0.000	0.000
Steele City	MT	Valley	46.931	46.945	0.014	MT105	Thoeny-Phillips complex, 1 to 5 percent slopes	0.000	0.000	0.014	0.000	0.000	0.014	0.000	0.000	0.000
Steele City	MT	Valley	46.945	47.023	0.079	MT105	Sunburst-Lisam complex, 9 to 35 percent slopes	0.000	0.075	0.073	0.000	0.000	0.073	0.033	0.000	0.000
Steele City	MT	Valley	47.023	47.296	0.272	MT105	Thoeny-Phillips complex, 1 to 5 percent slopes	0.000	0.000	0.272	0.000	0.003	0.272	0.000	0.000	0.000
Steele City	MT	Valley	47.296	47.571	0.276	MT105	Tinsley complex, 9 to 35 percent slopes	0.000	0.221	0.083	0.000	0.000	0.152	0.221	0.000	0.000
Steele City	MT	Valley	47.571	47.819	0.247	MT105	Phillips loam, 0 to 5 percent slopes	0.000	0.007	0.240	0.000	0.002	0.247	0.000	0.000	0.000
Steele City	MT	Valley	47.819	47.922	0.103	MT105	Elloam gravelly clay, 2 to 9 percent slopes	0.000	0.100	0.103	0.000	0.000	0.103	0.093	0.000	0.000
Steele City	MT	Valley	47.922	48.039	0.117	MT105	Phillips loam, 0 to 5 percent slopes	0.000	0.004	0.113	0.000	0.001	0.117	0.000	0.000	0.000
Steele City	MT	Valley	48.039	48.502	0.463	MT105	Sunburst-Lisam complex, 9 to 35 percent slopes	0.000	0.440	0.430	0.000	0.000	0.430	0.194	0.000	0.000
Steele City	MT	Valley	48.502	48.655	0.153	MT105	Thoeny-Phillips complex, 1 to 5 percent slopes	0.000	0.000	0.153	0.000	0.002	0.153	0.000	0.000	0.000
Steele City	MT	Valley	48.655	48.706	0.051	MT105	Scobey-Sunburst clay loams, 5 to 25 percent slopes	0.000	0.050	0.024	0.000	0.000	0.051	0.015	0.000	0.000
Steele City	MT	Valley	48.706	48.730	0.024	MT105	Phillips-Elloam complex, 1 to 9 percent slopes	0.000	0.022	0.022	0.000	0.000	0.024	0.000	0.000	0.000
Steele City	MT	Valley	48.730	48.784	0.054	MT105	Scobey-Sunburst clay loams, 5 to 25 percent slopes	0.000	0.052	0.025	0.000	0.000	0.054	0.016	0.000	0.000
Steele City	MT	Valley	48.784	48.849	0.065	MT105	Phillips-Elloam complex, 1 to 9 percent slopes	0.000	0.058	0.058	0.000	0.001	0.065	0.000	0.000	0.000
Steele City	MT	Valley	48.849	49.010	0.161	MT105	Scobey-Sunburst clay loams, 5 to 25 percent slopes	0.000	0.156	0.074	0.000	0.000	0.161	0.048	0.000	0.000
Steele City	MT	Valley	49.010	49.053	0.043	MT105	Phillips-Elloam complex, 1 to 9 percent slopes	0.000	0.038	0.038	0.000	0.000	0.043	0.000	0.000	0.000
Steele City	MT	Valley	49.053	49.125	0.072	MT105	Scobey-Sunburst clay loams, 5 to 25 percent slopes	0.000	0.070	0.033	0.000	0.000	0.072	0.022	0.000	0.000
Steele City	MT	Valley	49.125	51.085	1.960	MT105	Phillips-Elloam complex, 1 to 9 percent slopes	0.000	1.764	1.764	0.000	0.020	1.960	0.000	0.000	0.000
Steele City	MT	Valley	51.085	51.224	0.139	MT105	Absher-Vaeda complex, 1 to 5 percent slopes	0.000	0.000	0.139	0.000	0.000	0.139	0.000	0.000	0.000
Steele City	MT	Valley	51.224	51.495	0.271	MT105	Sunburst-Lisam complex, 9 to 35 percent slopes	0.000	0.258	0.252	0.000	0.000	0.252	0.114	0.000	0.000
Steele City	MT	Valley	51.495	51.571	0.076	MT105	Thoeny-Phillips complex, 1 to 5 percent slopes	0.000	0.000	0.076	0.000	0.001	0.076	0.000	0.000	0.000
Steele City	MT	Valley	51.571	51.738	0.167	MT105	Sunburst-Lisam complex, 9 to 35 percent slopes	0.000	0.159	0.155	0.000	0.000	0.155	0.070	0.000	0.000
Steele City	MT	Valley	51.738	52.152	0.413	MT105	Thoeny-Phillips complex, 1 to 5 percent slopes	0.000	0.000	0.413	0.000	0.004	0.413	0.000	0.000	0.000
Steele City	MT	Valley	52.152	52.290	0.138	MT105	Sunburst-Lisam complex, 9 to 35 percent slopes	0.000	0.131	0.128	0.000	0.000	0.128	0.058	0.000	0.000
Steele City	MT	Valley	52.290	52.388	0.098	MT105	Ustic Torrifluvents, gently sloping	0.000	0.000	0.098	0.000	0.000	0.098	0.098	0.000	0.000
Steele City	MT	Valley	52.388	52.458	0.069	MT105	Sunburst-Lisam complex, 9 to 35 percent slopes	0.000	0.066	0.064	0.000	0.000	0.064	0.029	0.000	0.000
Steele City	MT	Valley	52.458	52.895	0.438	MT105	Phillips-Elloam complex, 1 to 9 percent slopes	0.000	0.394	0.394	0.000	0.004	0.438	0.000	0.000	0.000
Steele City	MT	Valley	52.895	52.964	0.069	MT105	Sunburst-Lisam complex, 9 to 35 percent slopes	0.000	0.065	0.064	0.000	0.000	0.064	0.029	0.000	0.000
Steele City	MT	Valley	52.964	53.143	0.179	MT105	Phillips-Elloam complex, 1 to 9 percent slopes	0.000	0.161	0.161	0.000	0.002	0.179	0.000	0.000	0.000
Steele City	MT	Valley	53.143	53.225	0.082	MT105	Sunburst-Lisam complex, 9 to 35 percent slopes	0.000	0.078	0.076	0.000	0.000	0.076	0.034	0.000	0.000
Steele City	MT	Valley	53.225	53.272	0.047	MT105	Elloam gravelly clay, 2 to 9 percent slopes	0.000	0.045	0.047	0.000	0.000	0.047	0.042	0.000	0.000
Steele City	MT	Valley	53.272	53.492	0.220	MT105	Absher-Vaeda complex, 1 to 5 percent slopes	0.000	0.000	0.220	0.000	0.000	0.220	0.000	0.000	0.000
Steele City	MT	Valley	53.492	53.593	0.102	MT105	Thebo-Lisam clays, 2 to 15 percent slopes	0.000	0.094	0.099	0.000	0.000	0.099	0.000	0.000	0.000

Appendix K – Soils by Milepost – Steele City Segment

Pipeline Segment	State	County	Beginning Milepost	Ending Milepost	Miles	Soil Series	Soil Series Name	Wind (miles)	Water (miles)	Low revegetation on Potential (miles)	Prime Farmland (miles)	Hydric Soils (miles)	Compaction on Prone (miles)	Stoney – Rocky (miles)	Shallow Bedrock (miles)	Droghty (miles)
Steele City	MT	Valley	53.593	54.028	0.435	MT105	Sunburst-Lisam complex, 9 to 35 percent slopes	0.000	0.413	0.404	0.000	0.000	0.404	0.183	0.000	0.000
Steele City	MT	Valley	54.028	54.321	0.293	MT105	Thoeny-Phillips complex, 1 to 5 percent slopes	0.000	0.000	0.293	0.000	0.003	0.293	0.000	0.000	0.000
Steele City	MT	Valley	54.321	54.762	0.442	MT105	Phillips-Elloam complex, 1 to 9 percent slopes	0.000	0.398	0.398	0.000	0.004	0.442	0.000	0.000	0.000
Steele City	MT	Valley	54.762	55.218	0.456	MT105	Sunburst-Lisam complex, 9 to 35 percent slopes	0.000	0.433	0.424	0.000	0.000	0.424	0.191	0.000	0.000
Steele City	MT	Valley	55.218	55.315	0.097	MT105	Ustic Torrifluvents, gently sloping	0.000	0.000	0.097	0.000	0.000	0.097	0.097	0.000	0.000
Steele City	MT	Valley	55.315	55.669	0.354	MT105	Havre-Harlem silty clays	0.000	0.000	0.319	0.000	0.000	0.319	0.000	0.000	0.000
Steele City	MT	Valley	55.669	55.799	0.131	MT105	Sunburst-Lisam complex, 9 to 35 percent slopes	0.000	0.124	0.121	0.000	0.000	0.121	0.055	0.000	0.000
Steele City	MT	Valley	55.799	55.930	0.131	MT105	Phillips-Elloam complex, 1 to 9 percent slopes	0.000	0.118	0.118	0.000	0.001	0.131	0.000	0.000	0.000
Steele City	MT	Valley	55.930	55.973	0.042	MT105	Sunburst clay loam, 9 to 35 percent slopes	0.000	0.042	0.039	0.000	0.000	0.042	0.034	0.000	0.000
Steele City	MT	Valley	55.973	56.475	0.503	MT105	Phillips-Elloam complex, 1 to 9 percent slopes	0.000	0.453	0.453	0.000	0.005	0.503	0.000	0.000	0.000
Steele City	MT	Valley	56.475	56.547	0.072	MT105	Sunburst-Lisam complex, 9 to 35 percent slopes	0.000	0.068	0.067	0.000	0.000	0.067	0.030	0.000	0.000
Steele City	MT	Valley	56.547	56.799	0.251	MT105	Phillips-Elloam complex, 1 to 9 percent slopes	0.000	0.226	0.226	0.000	0.003	0.251	0.000	0.000	0.000
Steele City	MT	Valley	56.799	56.856	0.057	MT105	Sunburst-Lisam complex, 9 to 35 percent slopes	0.000	0.054	0.053	0.000	0.000	0.053	0.024	0.000	0.000
Steele City	MT	Valley	56.856	57.028	0.173	MT105	Aquic Ustifluvents, saline	0.000	0.000	0.173	0.000	0.009	0.173	0.000	0.000	0.000
Steele City	MT	Valley	57.028	57.169	0.140	MT105	Elloam gravelly clay, 2 to 9 percent slopes	0.000	0.136	0.140	0.000	0.000	0.140	0.126	0.000	0.000
Steele City	MT	Valley	57.169	57.234	0.065	MT105	Lisam-Dilts clays, 5 to 35 percent slopes	0.000	0.064	0.039	0.000	0.001	0.065	0.028	0.000	0.000
Steele City	MT	Valley	57.234	57.301	0.067	MT105	Sunburst-Lisam complex, 9 to 35 percent slopes	0.000	0.064	0.062	0.000	0.000	0.062	0.028	0.000	0.000
Steele City	MT	Valley	57.301	57.366	0.065	MT105	Lisam-Dilts clays, 5 to 35 percent slopes	0.000	0.064	0.039	0.000	0.001	0.065	0.028	0.000	0.000
Steele City	MT	Valley	57.366	57.560	0.195	MT105	Sunburst-Lisam complex, 9 to 35 percent slopes	0.000	0.185	0.181	0.000	0.000	0.181	0.082	0.000	0.000
Steele City	MT	Valley	57.560	57.763	0.203	MT105	Phillips-Elloam complex, 1 to 9 percent slopes	0.000	0.182	0.182	0.000	0.002	0.203	0.000	0.000	0.000
Steele City	MT	Valley	57.763	58.344	0.582	MT105	Elloam gravelly clay, 2 to 9 percent slopes	0.000	0.564	0.582	0.000	0.000	0.582	0.523	0.000	0.000
Steele City	MT	Valley	58.344	59.209	0.865	MT105	Thoeny-Phillips complex, 1 to 5 percent slopes	0.000	0.000	0.865	0.000	0.009	0.865	0.000	0.000	0.000
Steele City	MT	Valley	59.209	59.323	0.114	MT105	Ustic Torrifluvents, gently sloping	0.000	0.000	0.114	0.000	0.000	0.114	0.114	0.000	0.000
Steele City	MT	Valley	59.323	59.427	0.104	MT105	Elloam gravelly clay, 2 to 9 percent slopes	0.000	0.101	0.104	0.000	0.000	0.104	0.093	0.000	0.000
Steele City	MT	Valley	59.427	59.593	0.167	MT105	Elloam clay loam, 1 to 5 percent slopes	0.000	0.000	0.167	0.000	0.000	0.167	0.000	0.000	0.000
Steele City	MT	Valley	59.593	59.716	0.122	MT105	Elloam gravelly clay, 2 to 9 percent slopes	0.000	0.119	0.122	0.000	0.000	0.122	0.110	0.000	0.000
Steele City	MT	Valley	59.716	59.889	0.174	MT105	Aquic Ustifluvents, saline	0.000	0.000	0.174	0.000	0.009	0.174	0.000	0.000	0.000
Steele City	MT	Valley	59.889	60.094	0.205	MT105	Redvale loam, 0 to 3 percent slopes	0.000	0.000	0.000	0.205	0.000	0.205	0.197	0.000	0.000
Steele City	MT	Valley	60.094	61.106	1.012	MT105	Thoeny-Phillips complex, 1 to 5 percent slopes	0.000	0.000	1.012	0.000	0.010	1.012	0.000	0.000	0.000
Steele City	MT	Valley	61.106	61.545	0.438	MT105	Scobey-Sunburst clay loams, 5 to 25 percent slopes	0.000	0.425	0.202	0.000	0.000	0.438	0.132	0.000	0.000
Steele City	MT	Valley	61.545	61.689	0.145	MT105	Ustic Torrifluvents, gently sloping	0.000	0.000	0.145	0.000	0.000	0.145	0.145	0.000	0.000
Steele City	MT	Valley	61.689	61.897	0.207	MT105	Scobey-Sunburst clay loams, 5 to 25 percent slopes	0.000	0.201	0.095	0.000	0.000	0.207	0.062	0.000	0.000
Steele City	MT	Valley	61.897	63.188	1.292	MT105	Thoeny-Phillips complex, 1 to 5 percent slopes	0.000	0.000	1.292	0.000	0.013	1.292	0.000	0.000	0.000
Steele City	MT	Valley	63.188	63.596	0.407	MT105	Phillips-Scobey complex, 2 to 9 percent slopes	0.000	0.358	0.285	0.000	0.004	0.407	0.033	0.000	0.000
Steele City	MT	Valley	63.596	64.121	0.526	MT105	Phillips loam, 0 to 5 percent slopes	0.000	0.016	0.510	0.000	0.005	0.526	0.000	0.000	0.000
Steele City	MT	Valley	64.121	64.918	0.796	MT105	Thoeny-Phillips complex, 1 to 5 percent slopes	0.000	0.000	0.796	0.000	0.008	0.796	0.000	0.000	0.000
Steele City	MT	Valley	64.918	66.809	1.892	MT105	Phillips-Scobey complex, 2 to 9 percent slopes	0.000	1.665	1.324	0.000	0.019	1.892	0.151	0.000	0.000
Steele City	MT	Valley	66.809	66.851	0.042	MT105	Scobey-Sunburst clay loams, 5 to 25 percent slopes	0.000	0.040	0.019	0.000	0.000	0.042	0.012	0.000	0.000
Steele City	MT	Valley	66.851	66.939	0.088	MT105	Ustic Torrifluvents, gently sloping	0.000	0.000	0.088	0.000	0.000	0.088	0.088	0.000	0.000
Steele City	MT	Valley	66.939	67.101	0.162	MT105	Havre-Harlem silty clays	0.000	0.000	0.146	0.000	0.000	0.146	0.000	0.000	0.000
Steele City	MT	Valley	67.101	67.194	0.093	MT105	Phillips-Elloam complex, 1 to 9 percent slopes	0.000	0.084	0.084	0.000	0.001	0.093	0.000	0.000	0.000
Steele City	MT	Valley	67.194	67.422	0.228	MT105	Redvale loam, 0 to 3 percent slopes	0.000	0.000	0.000	0.228	0.000	0.228	0.219	0.000	0.000
Steele City	MT	Valley	67.422	67.564	0.142	MT105	Phillips-Elloam complex, 1 to 9 percent slopes	0.000	0.128	0.128	0.000	0.001	0.142	0.000	0.000	0.000
Steele City	MT	Valley	67.564	67.768	0.204	MT105	Phillips-Scobey complex, 2 to 9 percent slopes	0.000	0.179	0.143	0.000	0.002	0.204	0.016	0.000	0.000

Appendix K – Soils by Milepost – Steele City Segment

Pipeline Segment	State	County	Beginning Milepost	Ending Milepost	Miles	Soil Series	Soil Series Name	Wind (miles)	Water (miles)	Low revegetation on Potential (miles)	Prime Farmland (miles)	Hydric Soils (miles)	Compaction on Prone (miles)	Stoney – Rocky (miles)	Shallow Bedrock (miles)	Droghty (miles)
Steele City	MT	Valley	67.768	67.991	0.224	MT105	Thoeny-Phillips complex, 1 to 5 percent slopes	0.000	0.000	0.224	0.000	0.002	0.224	0.000	0.000	0.000
Steele City	MT	Valley	67.991	68.293	0.302	MT105	Phillips-Scobey complex, 2 to 9 percent slopes	0.000	0.266	0.211	0.000	0.003	0.302	0.024	0.000	0.000
Steele City	MT	Valley	68.293	68.416	0.123	MT105	Redvale loam, 0 to 3 percent slopes	0.000	0.000	0.000	0.123	0.000	0.123	0.118	0.000	0.000
Steele City	MT	Valley	68.416	68.556	0.140	MT105	Ustic Torrifluvents, gently sloping	0.000	0.000	0.140	0.000	0.000	0.140	0.140	0.000	0.000
Steele City	MT	Valley	68.556	69.164	0.608	MT105	Phillips-Scobey complex, 2 to 9 percent slopes	0.000	0.535	0.426	0.000	0.006	0.608	0.049	0.000	0.000
Steele City	MT	Valley	69.164	69.206	0.042	MT105	Water	0.000	0.000	0.000	0.000	0.000	0.000	0.000	0.000	0.000
Steele City	MT	Valley	69.206	69.400	0.194	MT105	Phillips-Scobey complex, 2 to 9 percent slopes	0.000	0.171	0.136	0.000	0.002	0.194	0.016	0.000	0.000
Steele City	MT	Valley	69.400	70.217	0.817	MT105	Thoeny-Phillips complex, 1 to 5 percent slopes	0.000	0.000	0.817	0.000	0.008	0.817	0.000	0.000	0.000
Steele City	MT	Valley	70.217	70.375	0.158	MT105	Aquic Ustifluvents, saline	0.000	0.000	0.158	0.000	0.008	0.158	0.000	0.000	0.000
Steele City	MT	Valley	70.375	70.438	0.063	MT105	Havre-Rivra complex	0.000	0.000	0.035	0.000	0.000	0.051	0.022	0.000	0.000
Steele City	MT	Valley	70.438	70.529	0.090	MT105	Sunburst clay loam, 9 to 35 percent slopes	0.000	0.090	0.083	0.000	0.000	0.090	0.072	0.000	0.000
Steele City	MT	Valley	70.529	70.744	0.216	MT105	Phillips-Scobey complex, 2 to 9 percent slopes	0.000	0.190	0.151	0.000	0.002	0.216	0.017	0.000	0.000
Steele City	MT	Valley	70.744	70.823	0.078	MT105	Sunburst clay loam, 9 to 35 percent slopes	0.000	0.078	0.072	0.000	0.000	0.078	0.063	0.000	0.000
Steele City	MT	Valley	70.823	71.008	0.185	MT105	Ustic Torrifluvents, gently sloping	0.000	0.000	0.185	0.000	0.000	0.185	0.185	0.000	0.000
Steele City	MT	Valley	71.008	72.870	1.862	MT105	Phillips-Scobey complex, 2 to 9 percent slopes	0.000	1.638	1.303	0.000	0.019	1.862	0.149	0.000	0.000
Steele City	MT	Valley	72.870	73.398	0.528	MT105	Scobey clay loam, 1 to 9 percent slopes	0.000	0.507	0.053	0.000	0.005	0.528	0.016	0.000	0.000
Steele City	MT	Valley	73.398	73.495	0.098	MT105	Phillips-Scobey complex, 2 to 9 percent slopes	0.000	0.086	0.068	0.000	0.001	0.098	0.008	0.000	0.000
Steele City	MT	Valley	73.495	73.567	0.071	MT105	Scobey clay loam, 1 to 9 percent slopes	0.000	0.068	0.007	0.000	0.001	0.071	0.002	0.000	0.000
Steele City	MT	Valley	73.567	75.769	2.202	MT105	Phillips-Scobey complex, 2 to 9 percent slopes	0.000	1.938	1.542	0.000	0.022	2.202	0.176	0.000	0.000
Steele City	MT	Valley	75.769	75.836	0.067	MT105	Sunburst clay loam, 9 to 35 percent slopes	0.000	0.067	0.061	0.000	0.000	0.067	0.053	0.000	0.000
Steele City	MT	Valley	75.836	75.897	0.061	MT105	Ustic Torrifluvents, gently sloping	0.000	0.000	0.061	0.000	0.000	0.061	0.061	0.000	0.000
Steele City	MT	Valley	75.897	75.946	0.050	MT105	Sunburst clay loam, 9 to 35 percent slopes	0.000	0.050	0.046	0.000	0.000	0.050	0.040	0.000	0.000
Steele City	MT	Valley	75.946	76.449	0.503	MT105	Phillips-Scobey complex, 2 to 9 percent slopes	0.000	0.442	0.352	0.000	0.005	0.503	0.040	0.000	0.000
Steele City	MT	Valley	76.449	76.475	0.026	MT105	Sunburst clay loam, 9 to 35 percent slopes	0.000	0.026	0.024	0.000	0.000	0.026	0.020	0.000	0.000
Steele City	MT	Valley	76.475	77.720	1.245	MT105	Phillips-Scobey complex, 2 to 9 percent slopes	0.000	1.096	0.872	0.000	0.012	1.245	0.100	0.000	0.000
Steele City	MT	Valley	77.720	77.798	0.078	MT105	Sunburst clay loam, 9 to 35 percent slopes	0.000	0.078	0.072	0.000	0.000	0.078	0.062	0.000	0.000
Steele City	MT	Valley	77.798	77.854	0.056	MT105	Ustic Torrifluvents, gently sloping	0.000	0.000	0.056	0.000	0.000	0.056	0.056	0.000	0.000
Steele City	MT	Valley	77.854	77.883	0.029	MT105	Sunburst clay loam, 9 to 35 percent slopes	0.000	0.029	0.027	0.000	0.000	0.029	0.024	0.000	0.000
Steele City	MT	Valley	77.883	78.016	0.134	MT105	Phillips-Scobey complex, 2 to 9 percent slopes	0.000	0.117	0.093	0.000	0.001	0.134	0.011	0.000	0.000
Steele City	MT	Valley	78.016	78.247	0.231	MT105	Sunburst clay loam, 9 to 35 percent slopes	0.000	0.231	0.213	0.000	0.000	0.231	0.185	0.000	0.000
Steele City	MT	Valley	78.247	78.645	0.397	MT105	Phillips-Scobey complex, 2 to 9 percent slopes	0.000	0.350	0.278	0.000	0.004	0.397	0.032	0.000	0.000
Steele City	MT	Valley	78.645	78.817	0.172	MT105	Nishon loam	0.000	0.003	0.169	0.000	0.163	0.172	0.000	0.000	0.000
Steele City	MT	Valley	78.817	79.265	0.448	MT105	Phillips-Scobey complex, 2 to 9 percent slopes	0.000	0.394	0.313	0.000	0.004	0.448	0.036	0.000	0.000
Steele City	MT	Valley	79.265	79.636	0.372	MT105	Scobey clay loam, 1 to 9 percent slopes	0.000	0.357	0.037	0.000	0.004	0.372	0.011	0.000	0.000
Steele City	MT	Valley	79.636	80.744	1.108	MT105	Phillips-Scobey complex, 2 to 9 percent slopes	0.000	0.975	0.776	0.000	0.011	1.108	0.089	0.000	0.000
Steele City	MT	Valley	80.744	82.090	1.346	MT105	Redvale loam, 0 to 3 percent slopes	0.000	0.000	0.000	1.346	0.000	1.346	1.292	0.000	0.000
Steele City	MT	Valley	82.090	82.373	0.283	MT105	Sunburst clay loam, 9 to 35 percent slopes	0.000	0.283	0.260	0.000	0.000	0.283	0.226	0.000	0.000
Steele City	MT	Valley	82.373	82.453	0.080	MT105	Phillips-Elloam complex, 1 to 9 percent slopes	0.000	0.072	0.072	0.000	0.001	0.080	0.000	0.000	0.000
Steele City	MT	Valley	82.453	82.670	0.218	MT105	Havre silty clay loam	0.000	0.000	0.218	0.218	0.000	0.218	0.000	0.000	0.000
Steele City	MT	Valley	82.670	82.689	0.019	MT105	Water	0.000	0.000	0.000	0.000	0.000	0.000	0.000	0.000	0.000
Steele City	MT	Valley	82.689	84.811	2.122	MT105	Harlem clay	0.000	0.000	2.122	0.000	0.000	2.122	0.000	0.000	0.000
Steele City	MT	Valley	84.811	85.008	0.196	MT105	Hillon-Telstad loams, 9 to 15 percent slopes	0.000	0.196	0.090	0.000	0.000	0.189	0.008	0.000	0.000
Steele City	MT	Valley	85.008	86.810	1.803	MT105	Evanston-Lonna loams, 2 to 9 percent slopes	0.000	1.712	0.901	0.000	0.000	1.803	0.000	0.000	0.000
Steele City	MT	Valley	86.810	86.881	0.071	MT105	Hillon loam, 15 to 35 percent slopes	0.000	0.071	0.008	0.000	0.000	0.068	0.007	0.000	0.000

Appendix K – Soils by Milepost – Steele City Segment

Pipeline Segment	State	County	Beginning Milepost	Ending Milepost	Miles	Soil Series	Soil Series Name	Wind (miles)	Water (miles)	Low revegetation on Potential (miles)	Prime Farmland (miles)	Hydric Soils (miles)	Compaction on Prone (miles)	Stoney – Rocky (miles)	Shallow Bedrock (miles)	Droghty (miles)
Steele City	MT	Valley	86.881	87.480	0.598	MT105	Havre-Harlem silty clays	0.000	0.000	0.538	0.000	0.000	0.538	0.000	0.000	0.000
Steele City	MT	Valley	87.480	87.868	0.388	MT105	Havre silty clay loam	0.000	0.000	0.388	0.388	0.000	0.388	0.000	0.000	0.000
Steele City	MT	Valley	87.868	88.035	0.167	MT105	Havre-Harlem silty clays	0.000	0.000	0.150	0.000	0.000	0.150	0.000	0.000	0.000
Steele City	MT	Valley	88.035	88.053	0.019	MT105	Havre silty clay loam	0.000	0.000	0.019	0.019	0.000	0.019	0.000	0.000	0.000
Steele City	MT	Valley	88.053	88.176	0.123	MT105	Havre-Harlem silty clays	0.000	0.000	0.111	0.000	0.000	0.111	0.000	0.000	0.000
Steele City	MT	Valley	88.176	88.364	0.188	MT105	Havre silty clay loam	0.000	0.000	0.188	0.188	0.000	0.188	0.000	0.000	0.000
Steele City	MT	Valley	88.364	88.787	0.423	MT105	Havre-Harlem silty clays	0.000	0.000	0.380	0.000	0.000	0.380	0.000	0.000	0.000
Steele City	MT	Valley	88.787	88.909	0.122	MT105	Water	0.000	0.000	0.000	0.000	0.000	0.000	0.000	0.000	0.000
Steele City	MT	McCone	88.909	89.003	0.094	MT055	Water	0.000	0.000	0.000	0.000	0.000	0.000	0.000	0.000	0.000
Steele City	MT	McCone	89.003	89.148	0.145	MT055	Havre silty clay loam	0.000	0.000	0.145	0.145	0.000	0.145	0.000	0.000	0.000
Steele City	MT	McCone	89.148	89.315	0.167	MT055	Glendive silty clay loam, protected	0.000	0.000	0.167	0.000	0.000	0.167	0.000	0.000	0.000
Steele City	MT	McCone	89.315	89.537	0.223	MT055	Havre silty clay loam, protected	0.000	0.000	0.022	0.223	0.000	0.223	0.000	0.000	0.000
Steele City	MT	McCone	89.537	89.636	0.099	MT055	Glendive silty clay loam, protected	0.000	0.000	0.099	0.000	0.000	0.099	0.000	0.000	0.000
Steele City	MT	McCone	89.636	89.769	0.133	MT055	Havre silty clay loam, protected	0.000	0.000	0.013	0.133	0.000	0.133	0.000	0.000	0.000
Steele City	MT	McCone	89.769	89.957	0.188	MT055	Harlem silty clay, protected	0.000	0.000	0.015	0.188	0.004	0.188	0.000	0.000	0.000
Steele City	MT	McCone	89.957	90.025	0.068	MT055	Neldore-Badland-Bascovy complex, 15 to 45 percent slopes	0.000	0.046	0.048	0.000	0.000	0.048	0.031	0.000	0.000
Steele City	MT	McCone	90.025	90.362	0.337	MT055	Yamac-Twilight-Fleak complex, 8 to 15 percent slopes	0.067	0.145	0.246	0.000	0.000	0.145	0.000	0.000	0.000
Steele City	MT	McCone	90.362	90.742	0.380	MT055	Neldore-Yamac-Badland complex, 15 to 45 percent slopes	0.023	0.285	0.273	0.000	0.000	0.273	0.140	0.000	0.000
Steele City	MT	McCone	90.742	90.794	0.052	MT055	Yamac loam, 8 to 15 percent slopes	0.002	0.047	0.051	0.000	0.000	0.049	0.000	0.000	0.000
Steele City	MT	McCone	90.794	90.887	0.093	MT055	Neldore-Yamac-Badland complex, 15 to 45 percent slopes	0.006	0.070	0.067	0.000	0.000	0.067	0.034	0.000	0.000
Steele City	MT	McCone	90.887	91.375	0.488	MT055	Yamac-Twilight-Fleak complex, 8 to 15 percent slopes	0.098	0.210	0.356	0.000	0.000	0.210	0.000	0.000	0.000
Steele City	MT	McCone	91.375	91.553	0.178	MT055	Busby-Fleak complex, 15 to 45 percent slopes	0.143	0.169	0.027	0.000	0.000	0.027	0.012	0.000	0.000
Steele City	MT	McCone	91.553	91.698	0.144	MT055	Yamac-Twilight-Fleak complex, 8 to 15 percent slopes	0.029	0.062	0.105	0.000	0.000	0.062	0.000	0.000	0.000
Steele City	MT	McCone	91.698	91.988	0.291	MT055	Busby-Fleak complex, 15 to 45 percent slopes	0.233	0.276	0.044	0.000	0.000	0.044	0.020	0.000	0.000
Steele City	MT	McCone	91.988	92.167	0.179	MT055	Twilight-Yetull fine sandy loams, 8 to 15 percent slopes	0.005	0.023	0.173	0.000	0.000	0.030	0.000	0.000	0.000
Steele City	MT	McCone	92.167	92.173	0.007	MT055	Busby-Fleak complex, 15 to 45 percent slopes	0.005	0.006	0.001	0.000	0.000	0.001	0.000	0.000	0.000
Steele City	MT	McCone	92.173	92.375	0.202	MT055	Twilight-Yetull fine sandy loams, 8 to 15 percent slopes	0.006	0.026	0.196	0.000	0.000	0.034	0.000	0.000	0.000
Steele City	MT	McCone	92.375	92.646	0.271	MT055	Busby-Fleak complex, 15 to 45 percent slopes	0.217	0.258	0.041	0.000	0.000	0.041	0.019	0.000	0.000
Steele City	MT	McCone	92.646	92.832	0.185	MT055	Yamac-Twilight-Fleak complex, 8 to 15 percent slopes	0.037	0.080	0.135	0.000	0.000	0.080	0.000	0.000	0.000
Steele City	MT	McCone	92.832	93.448	0.616	MT055	Busby-Yamac-Fleak complex, 15 to 45 percent slopes	0.308	0.579	0.222	0.000	0.000	0.216	0.012	0.000	0.000
Steele City	MT	McCone	93.448	93.483	0.035	MT055	Aeric Fluvaquents, loamy	0.000	0.000	0.003	0.000	0.002	0.003	0.000	0.000	0.000
Steele City	MT	McCone	93.483	93.519	0.035	MT055	Sunburst clay loam, 8 to 15 percent slopes	0.000	0.034	0.034	0.000	0.000	0.034	0.030	0.000	0.000
Steele City	MT	McCone	93.519	93.586	0.067	MT055	Busby-Yamac-Fleak complex, 15 to 45 percent slopes	0.034	0.063	0.024	0.000	0.000	0.023	0.001	0.000	0.000
Steele City	MT	McCone	93.586	93.629	0.044	MT055	Sunburst clay loam, 8 to 15 percent slopes	0.000	0.042	0.042	0.000	0.000	0.042	0.037	0.000	0.000

Appendix K – Soils by Milepost – Steele City Segment

Pipeline Segment	State	County	Beginning Milepost	Ending Milepost	Miles	Soil Series	Soil Series Name	Wind (miles)	Water (miles)	Low revegetation on Potential (miles)	Prime Farmland (miles)	Hydric Soils (miles)	Compaction on Prone (miles)	Stoney – Rocky (miles)	Shallow Bedrock (miles)	Droghty (miles)
Steele City	MT	McCone	93.629	93.708	0.078	MT055	Sunburst clay loam, 15 to 45 percent slopes	0.008	0.078	0.071	0.000	0.000	0.071	0.066	0.000	0.000
Steele City	MT	McCone	93.708	93.912	0.204	MT055	Busby-Fleak complex, 15 to 45 percent slopes	0.164	0.194	0.031	0.000	0.000	0.031	0.014	0.000	0.000
Steele City	MT	McCone	93.912	94.031	0.119	MT055	Hillon-Yamac-Fleak complex, 15 to 45 percent slopes	0.059	0.110	0.044	0.000	0.000	0.080	0.000	0.000	0.000
Steele City	MT	McCone	94.031	94.132	0.101	MT055	Sunburst clay loam, 8 to 15 percent slopes	0.000	0.097	0.098	0.000	0.000	0.098	0.086	0.000	0.000
Steele City	MT	McCone	94.132	94.147	0.015	MT055	Hillon-Yamac-Fleak complex, 15 to 45 percent slopes	0.008	0.014	0.006	0.000	0.000	0.010	0.000	0.000	0.000
Steele City	MT	McCone	94.147	94.166	0.019	MT055	Sunburst clay loam, 15 to 45 percent slopes	0.002	0.019	0.018	0.000	0.000	0.018	0.016	0.000	0.000
Steele City	MT	McCone	94.166	94.398	0.232	MT055	Hillon-Yamac-Fleak complex, 15 to 45 percent slopes	0.116	0.215	0.086	0.000	0.000	0.155	0.000	0.000	0.000
Steele City	MT	McCone	94.398	94.595	0.197	MT055	Sunburst clay loam, 15 to 45 percent slopes	0.020	0.197	0.179	0.000	0.000	0.179	0.167	0.000	0.000
Steele City	MT	McCone	94.595	94.683	0.089	MT055	Hillon-Yamac-Fleak complex, 15 to 45 percent slopes	0.044	0.082	0.033	0.000	0.000	0.059	0.000	0.000	0.000
Steele City	MT	McCone	94.683	94.789	0.106	MT055	Sunburst clay loam, 15 to 45 percent slopes	0.011	0.106	0.096	0.000	0.000	0.096	0.090	0.000	0.000
Steele City	MT	McCone	94.789	94.961	0.171	MT055	Hillon-Yamac-Fleak complex, 15 to 45 percent slopes	0.086	0.159	0.063	0.000	0.000	0.115	0.000	0.000	0.000
Steele City	MT	McCone	94.961	95.277	0.316	MT055	Sunburst clay loam, 15 to 45 percent slopes	0.032	0.316	0.288	0.000	0.000	0.288	0.269	0.000	0.000
Steele City	MT	McCone	95.277	95.774	0.497	MT055	Busby-Yamac-Fleak complex, 15 to 45 percent slopes	0.249	0.468	0.179	0.000	0.000	0.174	0.010	0.000	0.000
Steele City	MT	McCone	95.774	95.859	0.084	MT055	Hillon loam, 8 to 15 percent slopes	0.000	0.082	0.011	0.000	0.000	0.084	0.003	0.000	0.000
Steele City	MT	McCone	95.859	95.936	0.078	MT055	Busby-Fleak complex, 15 to 45 percent slopes	0.062	0.074	0.012	0.000	0.000	0.012	0.005	0.000	0.000
Steele City	MT	McCone	95.936	96.317	0.381	MT055	Busby-Yamac-Fleak complex, 15 to 45 percent slopes	0.190	0.358	0.137	0.000	0.000	0.133	0.008	0.000	0.000
Steele City	MT	McCone	96.317	96.443	0.126	MT055	Busby fine sandy loam, 8 to 15 percent slopes	0.006	0.115	0.009	0.126	0.000	0.008	0.000	0.000	0.000
Steele City	MT	McCone	96.443	96.516	0.073	MT055	Busby-Fleak complex, 15 to 45 percent slopes	0.058	0.069	0.011	0.000	0.000	0.011	0.005	0.000	0.000
Steele City	MT	McCone	96.516	96.672	0.156	MT055	Sunburst clay loam, 15 to 45 percent slopes	0.016	0.156	0.142	0.000	0.000	0.142	0.132	0.000	0.000
Steele City	MT	McCone	96.672	96.794	0.123	MT055	Busby-Yamac-Fleak complex, 15 to 45 percent slopes	0.061	0.115	0.044	0.000	0.000	0.043	0.002	0.000	0.000
Steele City	MT	McCone	96.794	96.893	0.099	MT055	Sunburst clay loam, 15 to 45 percent slopes	0.010	0.099	0.090	0.000	0.000	0.090	0.084	0.000	0.000
Steele City	MT	McCone	96.893	96.928	0.035	MT055	Hillon-Yamac-Fleak complex, 15 to 45 percent slopes	0.017	0.032	0.013	0.000	0.000	0.023	0.000	0.000	0.000
Steele City	MT	McCone	96.928	97.205	0.277	MT055	Sunburst clay loam, 15 to 45 percent slopes	0.028	0.277	0.252	0.000	0.000	0.252	0.235	0.000	0.000
Steele City	MT	McCone	97.205	97.454	0.249	MT055	Hillon-Yamac-Fleak complex, 15 to 45 percent slopes	0.124	0.231	0.092	0.000	0.000	0.167	0.000	0.000	0.000
Steele City	MT	McCone	97.454	97.580	0.127	MT055	Sunburst clay loam, 8 to 15 percent slopes	0.000	0.121	0.123	0.000	0.000	0.123	0.108	0.000	0.000
Steele City	MT	McCone	97.580	97.767	0.187	MT055	Kremlin loam, 0 to 4 percent slopes	0.000	0.000	0.007	0.187	0.000	0.178	0.000	0.000	0.000
Steele City	MT	McCone	97.767	97.878	0.110	MT055	Hillon-Yamac-Fleak complex, 15 to 45 percent slopes	0.055	0.103	0.041	0.000	0.000	0.074	0.000	0.000	0.000
Steele City	MT	McCone	97.878	97.940	0.062	MT055	Sunburst clay loam, 2 to 8 percent slopes	0.000	0.000	0.060	0.000	0.000	0.060	0.053	0.000	0.000
Steele City	MT	McCone	97.940	98.015	0.075	MT055	Yamac-Twilight complex, 2 to 8 percent slopes	0.004	0.004	0.068	0.000	0.000	0.045	0.000	0.000	0.000
Steele City	MT	McCone	98.015	98.147	0.131	MT055	Yamacall loam, 4 to 8 percent slopes	0.000	0.000	0.020	0.000	0.000	0.125	0.000	0.000	0.000
Steele City	MT	McCone	98.147	98.203	0.056	MT055	Busby-Fleak complex, 15 to 45 percent slopes	0.045	0.053	0.008	0.000	0.000	0.008	0.004	0.000	0.000
Steele City	MT	McCone	98.203	98.388	0.185	MT055	Yamacall loam, 4 to 8 percent slopes	0.000	0.000	0.028	0.000	0.000	0.176	0.000	0.000	0.000
Steele City	MT	McCone	98.388	98.587	0.200	MT055	Busby-Fleak complex, 15 to 45 percent slopes	0.160	0.190	0.030	0.000	0.000	0.030	0.014	0.000	0.000
Steele City	MT	McCone	98.587	98.783	0.195	MT055	Busby-Yamac-Fleak complex, 15 to 45 percent	0.098	0.184	0.070	0.000	0.000	0.068	0.004	0.000	0.000

Appendix K – Soils by Milepost – Steele City Segment

Pipeline Segment	State	County	Beginning Milepost	Ending Milepost	Miles	Soil Series	Soil Series Name	Wind (miles)	Water (miles)	Low revegetation on Potential (miles)	Prime Farmland (miles)	Hydric Soils (miles)	Compaction on Prone (miles)	Stoney – Rocky (miles)	Shallow Bedrock (miles)	Droghty (miles)
							slopes									
Steele City	MT	McCone	98.783	98.929	0.146	MT055	Yamac loam, 8 to 15 percent slopes	0.004	0.130	0.142	0.000	0.000	0.136	0.000	0.000	0.000
Steele City	MT	McCone	98.929	99.103	0.174	MT055	Busby-Fleak complex, 15 to 45 percent slopes	0.139	0.165	0.026	0.000	0.000	0.026	0.012	0.000	0.000
Steele City	MT	McCone	99.103	99.231	0.128	MT055	Yamac-Twilight-Fleak complex, 8 to 15 percent slopes	0.026	0.055	0.094	0.000	0.000	0.055	0.000	0.000	0.000
Steele City	MT	McCone	99.231	99.234	0.003	MT055	Sunburst clay loam, 8 to 15 percent slopes	0.000	0.003	0.003	0.000	0.000	0.003	0.003	0.000	0.000
Steele City	MT	McCone	99.234	99.291	0.057	MT055	Yamac-Twilight-Fleak complex, 8 to 15 percent slopes	0.011	0.024	0.041	0.000	0.000	0.024	0.000	0.000	0.000
Steele City	MT	McCone	99.291	99.375	0.084	MT055	Busby-Fleak complex, 15 to 45 percent slopes	0.068	0.080	0.013	0.000	0.000	0.013	0.006	0.000	0.000
Steele City	MT	McCone	99.375	99.410	0.035	MT055	Yamacall loam, 4 to 8 percent slopes	0.000	0.000	0.005	0.000	0.000	0.033	0.000	0.000	0.000
Steele City	MT	McCone	99.410	99.543	0.133	MT055	Busby-Fleak complex, 15 to 45 percent slopes	0.106	0.126	0.020	0.000	0.000	0.020	0.009	0.000	0.000
Steele City	MT	McCone	99.543	99.598	0.054	MT055	Yamac-Twilight-Fleak complex, 8 to 15 percent slopes	0.011	0.023	0.039	0.000	0.000	0.023	0.000	0.000	0.000
Steele City	MT	McCone	99.598	99.655	0.057	MT055	Rominell loam, 0 to 8 percent slopes	0.000	0.000	0.055	0.000	0.000	0.056	0.000	0.000	0.000
Steele City	MT	McCone	99.655	99.873	0.218	MT055	Yamac-Twilight-Fleak complex, 8 to 15 percent slopes	0.044	0.094	0.159	0.000	0.000	0.094	0.000	0.000	0.000
Steele City	MT	McCone	99.873	100.057	0.184	MT055	Sunburst clay loam, 8 to 15 percent slopes	0.000	0.177	0.178	0.000	0.000	0.178	0.156	0.000	0.000
Steele City	MT	McCone	100.057	100.127	0.070	MT055	Busby-Twilight-Fleak complex, 8 to 15 percent slopes	0.014	0.032	0.027	0.000	0.000	0.006	0.000	0.000	0.000
Steele City	MT	McCone	100.127	100.173	0.046	MT055	Kremlin loam, 0 to 4 percent slopes	0.000	0.000	0.002	0.046	0.000	0.044	0.000	0.000	0.000
Steele City	MT	McCone	100.173	100.215	0.042	MT055	Sunburst clay loam, 8 to 15 percent slopes	0.000	0.040	0.041	0.000	0.000	0.041	0.036	0.000	0.000
Steele City	MT	McCone	100.215	100.242	0.027	MT055	Kremlin loam, 0 to 4 percent slopes	0.000	0.000	0.001	0.027	0.000	0.025	0.000	0.000	0.000
Steele City	MT	McCone	100.242	100.476	0.235	MT055	Telstad-Hillon loams, 2 to 8 percent slopes	0.000	0.000	0.136	0.000	0.000	0.235	0.000	0.000	0.000
Steele City	MT	McCone	100.476	100.548	0.072	MT055	Busby-Yamac-Fleak complex, 15 to 45 percent slopes	0.036	0.068	0.026	0.000	0.000	0.025	0.001	0.000	0.000
Steele City	MT	McCone	100.548	100.667	0.119	MT055	Hillon-Yamac-Fleak complex, 15 to 45 percent slopes	0.060	0.111	0.044	0.000	0.000	0.080	0.000	0.000	0.000
Steele City	MT	McCone	100.667	100.770	0.103	MT055	Telstad loam, 2 to 8 percent slopes	0.000	0.000	0.007	0.000	0.000	0.103	0.000	0.000	0.000
Steele City	MT	McCone	100.770	100.979	0.209	MT055	Hillon-Yamac-Fleak complex, 15 to 45 percent slopes	0.104	0.194	0.077	0.000	0.000	0.140	0.000	0.000	0.000
Steele City	MT	McCone	100.979	101.160	0.181	MT055	Gerdrum-Yawdim-Fleak complex, 8 to 45 percent slopes	0.090	0.163	0.083	0.000	0.000	0.128	0.013	0.000	0.000
Steele City	MT	McCone	101.160	101.201	0.041	MT055	Busby-Yamac-Fleak complex, 15 to 45 percent slopes	0.021	0.039	0.015	0.000	0.000	0.014	0.001	0.000	0.000
Steele City	MT	McCone	101.201	101.202	0.001	MT055	Gerdrum clay loam, 0 to 8 percent slopes	0.000	0.000	0.001	0.000	0.000	0.001	0.000	0.000	0.000
Steele City	MT	McCone	101.202	101.384	0.182	MT055	Hillon-Yamac-Fleak complex, 15 to 45 percent slopes	0.091	0.169	0.067	0.000	0.000	0.122	0.000	0.000	0.000
Steele City	MT	McCone	101.384	101.499	0.115	MT055	Sunburst clay loam, 8 to 15 percent slopes	0.000	0.111	0.112	0.000	0.000	0.112	0.098	0.000	0.000
Steele City	MT	McCone	101.499	101.545	0.046	MT055	Gerdrum clay loam, 0 to 8 percent slopes	0.000	0.000	0.045	0.000	0.000	0.046	0.001	0.000	0.000
Steele City	MT	McCone	101.545	101.607	0.062	MT055	Hillon-Yamac-Fleak complex, 15 to 45 percent slopes	0.031	0.058	0.023	0.000	0.000	0.042	0.000	0.000	0.000
Steele City	MT	McCone	101.607	101.678	0.071	MT055	Evanston loam, 2 to 8 percent slopes	0.000	0.000	0.006	0.071	0.000	0.071	0.002	0.000	0.000
Steele City	MT	McCone	101.678	101.856	0.178	MT055	Creed-Gerdrum complex, 0 to 8 percent slopes	0.005	0.000	0.173	0.000	0.000	0.173	0.000	0.000	0.000
Steele City	MT	McCone	101.856	102.088	0.233	MT055	Gerdrum clay loam, 0 to 8 percent slopes	0.000	0.000	0.230	0.000	0.000	0.233	0.007	0.000	0.000
Steele City	MT	McCone	102.088	102.160	0.072	MT055	Busby-Yamac-Fleak complex, 15 to 45 percent	0.036	0.067	0.026	0.000	0.000	0.025	0.001	0.000	0.000

Appendix K – Soils by Milepost – Steele City Segment

Pipeline Segment	State	County	Beginning Milepost	Ending Milepost	Miles	Soil Series	Soil Series Name	Wind (miles)	Water (miles)	Low revegetation on Potential (miles)	Prime Farmland (miles)	Hydric Soils (miles)	Compaction on Prone (miles)	Stoney – Rocky (miles)	Shallow Bedrock (miles)	Droghty (miles)
							slopes									
Steele City	MT	McCone	102.160	102.271	0.111	MT055	Rominell loam, 0 to 8 percent slopes	0.000	0.000	0.107	0.000	0.000	0.109	0.000	0.000	0.000
Steele City	MT	McCone	102.271	102.317	0.046	MT055	Chinook fine sandy loam, 0 to 4 percent slopes	0.000	0.000	0.005	0.046	0.000	0.005	0.000	0.000	0.000
Steele City	MT	McCone	102.317	102.368	0.051	MT055	Lonna-Havre-Glendive complex, 0 to 2 percent slopes	0.001	0.000	0.050	0.000	0.002	0.037	0.000	0.000	0.000
Steele City	MT	McCone	102.368	102.398	0.029	MT055	Busby-Yetull fine sandy loams, 2 to 8 percent slopes	0.000	0.001	0.014	0.000	0.000	0.001	0.000	0.000	0.000
Steele City	MT	McCone	102.398	102.435	0.037	MT055	Lonna-Havre-Glendive complex, 0 to 2 percent slopes	0.001	0.000	0.037	0.000	0.001	0.027	0.000	0.000	0.000
Steele City	MT	McCone	102.435	102.594	0.159	MT055	Busby-Yetull fine sandy loams, 2 to 8 percent slopes	0.000	0.005	0.075	0.000	0.000	0.005	0.000	0.000	0.000
Steele City	MT	McCone	102.594	102.725	0.131	MT055	Busby fine sandy loam, 2 to 8 percent slopes	0.004	0.000	0.020	0.131	0.000	0.012	0.000	0.000	0.000
Steele City	MT	McCone	102.725	102.773	0.048	MT055	Busby-Yetull fine sandy loams, 2 to 8 percent slopes	0.000	0.001	0.023	0.000	0.000	0.001	0.000	0.000	0.000
Steele City	MT	McCone	102.773	102.820	0.048	MT055	Rominell loam, gullied, 0 to 8 percent slopes	0.000	0.000	0.044	0.000	0.000	0.046	0.000	0.000	0.000
Steele City	MT	McCone	102.820	103.013	0.193	MT055	Busby-Yetull fine sandy loams, 2 to 8 percent slopes	0.000	0.006	0.091	0.000	0.000	0.006	0.000	0.000	0.000
Steele City	MT	McCone	103.013	103.057	0.044	MT055	Gerdrum-Absher clay loams, 0 to 8 percent slopes	0.002	0.000	0.041	0.000	0.000	0.043	0.000	0.000	0.000
Steele City	MT	McCone	103.057	103.242	0.185	MT055	Gerdrum clay loam, 0 to 8 percent slopes	0.000	0.000	0.183	0.000	0.000	0.185	0.006	0.000	0.000
Steele City	MT	McCone	103.242	103.279	0.037	MT055	Gerdrum-Absher clay loams, 0 to 8 percent slopes	0.001	0.000	0.034	0.000	0.000	0.035	0.000	0.000	0.000
Steele City	MT	McCone	103.279	103.351	0.072	MT055	Gerdrum clay loam, 0 to 8 percent slopes	0.000	0.000	0.071	0.000	0.000	0.072	0.002	0.000	0.000
Steele City	MT	McCone	103.351	103.743	0.392	MT055	Gerdrum-Absher clay loams, 0 to 8 percent slopes	0.016	0.000	0.361	0.000	0.000	0.377	0.000	0.000	0.000
Steele City	MT	McCone	103.743	103.800	0.057	MT055	Gerdrum clay loam, 0 to 8 percent slopes	0.000	0.000	0.056	0.000	0.000	0.057	0.002	0.000	0.000
Steele City	MT	McCone	103.800	103.977	0.178	MT055	Hillon loam, 15 to 45 percent slopes	0.000	0.165	0.014	0.000	0.000	0.172	0.000	0.000	0.000
Steele City	MT	McCone	103.977	104.126	0.149	MT055	Telstad-Hillon loams, 2 to 8 percent slopes	0.000	0.000	0.086	0.000	0.000	0.149	0.000	0.000	0.000
Steele City	MT	McCone	104.126	104.156	0.030	MT055	Gerdrum clay loam, 0 to 8 percent slopes	0.000	0.000	0.030	0.000	0.000	0.030	0.001	0.000	0.000
Steele City	MT	McCone	104.156	104.204	0.048	MT055	Gerdrum-Absher clay loams, 0 to 8 percent slopes	0.002	0.000	0.044	0.000	0.000	0.046	0.000	0.000	0.000
Steele City	MT	McCone	104.204	104.345	0.141	MT055	Telstad loam, 2 to 8 percent slopes	0.000	0.000	0.010	0.000	0.000	0.141	0.000	0.000	0.000
Steele City	MT	McCone	104.345	104.449	0.104	MT055	Gerdrum clay loam, 0 to 8 percent slopes	0.000	0.000	0.103	0.000	0.000	0.104	0.003	0.000	0.000
Steele City	MT	McCone	104.449	104.501	0.052	MT055	Busby-Twilight-Fleak complex, 8 to 15 percent slopes	0.010	0.024	0.020	0.000	0.000	0.004	0.000	0.000	0.000
Steele City	MT	McCone	104.501	104.615	0.114	MT055	Gerdrum clay loam, 0 to 8 percent slopes	0.000	0.000	0.113	0.000	0.000	0.114	0.003	0.000	0.000
Steele City	MT	McCone	104.615	104.739	0.124	MT055	Ethridge silty clay loam, 4 to 8 percent slopes	0.000	0.000	0.009	0.124	0.000	0.124	0.000	0.000	0.000
Steele City	MT	McCone	104.739	105.169	0.430	MT055	Gerdrum clay loam, 0 to 8 percent slopes	0.000	0.000	0.426	0.000	0.000	0.430	0.013	0.000	0.000
Steele City	MT	McCone	105.169	105.273	0.104	MT055	Ustic torriorthents-Ustic torrifluvents association	0.000	0.006	0.012	0.000	0.002	0.016	0.000	0.000	0.000
Steele City	MT	McCone	105.273	105.287	0.014	MT055	Ethridge silty clay loam, 4 to 8 percent slopes	0.000	0.000	0.001	0.014	0.000	0.014	0.000	0.000	0.000
Steele City	MT	McCone	105.287	105.416	0.129	MT055	Gerdrum clay loam, 0 to 8 percent slopes	0.000	0.000	0.127	0.000	0.000	0.129	0.004	0.000	0.000
Steele City	MT	McCone	105.416	105.426	0.010	MT055	Gerdrum-Absher clay loams, 0 to 8 percent slopes	0.000	0.000	0.009	0.000	0.000	0.010	0.000	0.000	0.000
Steele City	MT	McCone	105.426	105.479	0.053	MT055	Ethridge silty clay loam, 4 to 8 percent slopes	0.000	0.000	0.004	0.053	0.000	0.053	0.000	0.000	0.000
Steele City	MT	McCone	105.479	105.605	0.126	MT055	Gerdrum clay loam, 0 to 8 percent slopes	0.000	0.000	0.125	0.000	0.000	0.126	0.004	0.000	0.000
Steele City	MT	McCone	105.605	105.656	0.052	MT055	Ethridge silty clay loam, 4 to 8 percent slopes	0.000	0.000	0.004	0.052	0.000	0.052	0.000	0.000	0.000
Steele City	MT	McCone	105.656	105.791	0.134	MT055	Cabbart-Yawdim complex, 4 to 15 percent slopes	0.000	0.129	0.087	0.000	0.000	0.129	0.000	0.000	0.000
Steele City	MT	McCone	105.791	106.010	0.219	MT055	Ethridge silty clay loam, 4 to 8 percent slopes	0.000	0.000	0.015	0.219	0.000	0.219	0.000	0.000	0.000
Steele City	MT	McCone	106.010	106.156	0.146	MT055	Cabbart-Yawdim complex, 4 to 15 percent slopes	0.000	0.140	0.095	0.000	0.000	0.140	0.000	0.000	0.000
Steele City	MT	McCone	106.156	106.394	0.238	MT055	Yawdim-Badland-Gerdrum association	0.019	0.157	0.076	0.000	0.000	0.148	0.000	0.000	0.000
Steele City	MT	McCone	106.394	106.515	0.121	MT055	Busby-Twilight-Fleak complex, 8 to 15 percent slopes	0.024	0.056	0.046	0.000	0.000	0.010	0.000	0.000	0.000
Steele City	MT	McCone	106.515	106.594	0.080	MT055	Ustic torriorthents-Ustic torrifluvents association	0.000	0.005	0.010	0.000	0.002	0.012	0.000	0.000	0.000
Steele City	MT	McCone	106.594	106.748	0.154	MT055	Busby-Yamac-Fleak complex, 15 to 45 percent	0.077	0.145	0.055	0.000	0.000	0.054	0.003	0.000	0.000

Appendix K – Soils by Milepost – Steele City Segment

Pipeline Segment	State	County	Beginning Milepost	Ending Milepost	Miles	Soil Series	Soil Series Name	Wind (miles)	Water (miles)	Low revegetation on Potential (miles)	Prime Farmland (miles)	Hydric Soils (miles)	Compaction on Prone (miles)	Stoney – Rocky (miles)	Shallow Bedrock (miles)	Droghty (miles)
							slopes									
Steele City	MT	McCone	106.748	106.797	0.049	MT055	Gerdrum clay loam, 0 to 8 percent slopes	0.000	0.000	0.048	0.000	0.000	0.049	0.001	0.000	0.000
Steele City	MT	McCone	106.797	106.885	0.088	MT055	Creed loam, 0 to 8 percent slopes	0.000	0.000	0.082	0.000	0.000	0.086	0.000	0.000	0.000
Steele City	MT	McCone	106.885	106.969	0.084	MT055	Telstad-Hillon loams, 2 to 8 percent slopes	0.000	0.000	0.049	0.000	0.000	0.084	0.000	0.000	0.000
Steele City	MT	McCone	106.969	107.349	0.379	MT055	Creed loam, 0 to 8 percent slopes	0.000	0.000	0.353	0.000	0.000	0.372	0.000	0.000	0.000
Steele City	MT	McCone	107.349	107.417	0.068	MT055	Ustic torriorthents-Ustic torrifluvents association	0.000	0.004	0.008	0.000	0.001	0.010	0.000	0.000	0.000
Steele City	MT	McCone	107.417	107.613	0.196	MT055	Creed loam, 0 to 8 percent slopes	0.000	0.000	0.182	0.000	0.000	0.192	0.000	0.000	0.000
Steele City	MT	McCone	107.613	108.128	0.515	MT055	Gerdrum clay loam, 0 to 8 percent slopes	0.000	0.000	0.510	0.000	0.000	0.515	0.015	0.000	0.000
Steele City	MT	McCone	108.128	108.514	0.386	MT055	Havre silt loam	0.000	0.000	0.039	0.386	0.008	0.386	0.000	0.000	0.000
Steele City	MT	McCone	108.514	108.573	0.058	MT055	Yawdim-Badland-Gerdrum association	0.005	0.039	0.019	0.000	0.000	0.036	0.000	0.000	0.000
Steele City	MT	McCone	108.573	108.638	0.066	MT055	Benz clay loam, 0 to 8 percent slopes	0.001	0.000	0.064	0.000	0.000	0.064	0.000	0.000	0.000
Steele City	MT	McCone	108.638	108.688	0.051	MT055	Chinook fine sandy loam, 0 to 4 percent slopes	0.000	0.000	0.005	0.051	0.000	0.005	0.000	0.000	0.000
Steele City	MT	McCone	108.688	108.714	0.026	MT055	Badland	0.000	0.003	0.004	0.000	0.000	0.004	0.001	0.000	0.000
Steele City	MT	McCone	108.714	108.813	0.099	MT055	Evanston-Gerdrum complex, 2 to 8 percent slopes	0.000	0.000	0.040	0.000	0.000	0.099	0.000	0.000	0.000
Steele City	MT	McCone	108.813	108.874	0.061	MT055	Rominell loam, gullied, 0 to 8 percent slopes	0.000	0.000	0.057	0.000	0.000	0.059	0.000	0.000	0.000
Steele City	MT	McCone	108.874	108.983	0.109	MT055	Evanston-Gerdrum complex, 2 to 8 percent slopes	0.000	0.000	0.043	0.000	0.000	0.109	0.000	0.000	0.000
Steele City	MT	McCone	108.983	109.064	0.081	MT055	Kremlin loam, 0 to 4 percent slopes	0.000	0.000	0.003	0.081	0.000	0.077	0.000	0.000	0.000
Steele City	MT	McCone	109.064	109.139	0.075	MT055	Evanston-Gerdrum complex, 2 to 8 percent slopes	0.000	0.000	0.030	0.000	0.000	0.075	0.000	0.000	0.000
Steele City	MT	McCone	109.139	109.261	0.123	MT055	Busby-Twilight fine sandy loams, 2 to 8 percent slopes	0.005	0.004	0.044	0.000	0.000	0.007	0.000	0.000	0.000
Steele City	MT	McCone	109.261	109.365	0.104	MT055	Busby-Twilight-Fleak complex, 8 to 15 percent slopes	0.021	0.048	0.039	0.000	0.000	0.008	0.000	0.000	0.000
Steele City	MT	McCone	109.365	109.457	0.092	MT055	Busby-Twilight fine sandy loams, 2 to 8 percent slopes	0.004	0.003	0.033	0.000	0.000	0.006	0.000	0.000	0.000
Steele City	MT	McCone	109.457	109.528	0.070	MT055	Evanston-Gerdrum complex, 2 to 8 percent slopes	0.000	0.000	0.028	0.000	0.000	0.070	0.000	0.000	0.000
Steele City	MT	McCone	109.528	109.693	0.165	MT055	Busby-Twilight fine sandy loams, 2 to 8 percent slopes	0.007	0.005	0.060	0.000	0.000	0.010	0.000	0.000	0.000
Steele City	MT	McCone	109.693	109.734	0.041	MT055	Evanston-Gerdrum complex, 2 to 8 percent slopes	0.000	0.000	0.016	0.000	0.000	0.041	0.000	0.000	0.000
Steele City	MT	McCone	109.734	109.826	0.092	MT055	Busby-Twilight fine sandy loams, 2 to 8 percent slopes	0.004	0.003	0.033	0.000	0.000	0.006	0.000	0.000	0.000
Steele City	MT	McCone	109.826	109.893	0.067	MT055	Evanston-Gerdrum complex, 2 to 8 percent slopes	0.000	0.000	0.027	0.000	0.000	0.067	0.000	0.000	0.000
Steele City	MT	McCone	109.893	109.954	0.062	MT055	Busby-Twilight fine sandy loams, 2 to 8 percent slopes	0.002	0.002	0.022	0.000	0.000	0.004	0.000	0.000	0.000
Steele City	MT	McCone	109.954	110.280	0.325	MT055	Busby-Twilight-Fleak complex, 8 to 15 percent slopes	0.065	0.150	0.124	0.000	0.000	0.026	0.000	0.000	0.000
Steele City	MT	McCone	110.280	110.414	0.135	MT055	Glendive loam	0.005	0.000	0.129	0.000	0.003	0.129	0.000	0.000	0.000
Steele City	MT	McCone	110.414	110.524	0.110	MT055	Lonna silty clay loam, 0 to 4 percent slopes	0.000	0.000	0.110	0.000	0.000	0.110	0.000	0.000	0.000
Steele City	MT	McCone	110.524	110.566	0.042	MT055	Busby-Twilight-Fleak complex, 8 to 15 percent slopes	0.008	0.019	0.016	0.000	0.000	0.003	0.000	0.000	0.000
Steele City	MT	McCone	110.566	110.617	0.051	MT055	Busby-Yamac-Fleak complex, 15 to 45 percent slopes	0.026	0.048	0.018	0.000	0.000	0.018	0.001	0.000	0.000
Steele City	MT	McCone	110.617	110.660	0.043	MT055	Busby-Twilight-Fleak complex, 8 to 15 percent slopes	0.009	0.020	0.016	0.000	0.000	0.003	0.000	0.000	0.000
Steele City	MT	McCone	110.660	110.711	0.051	MT055	Busby-Yamac-Fleak complex, 15 to 45 percent slopes	0.026	0.048	0.018	0.000	0.000	0.018	0.001	0.000	0.000

Appendix K – Soils by Milepost – Steele City Segment

Pipeline Segment	State	County	Beginning Milepost	Ending Milepost	Miles	Soil Series	Soil Series Name	Wind (miles)	Water (miles)	Low revegetation on Potential (miles)	Prime Farmland (miles)	Hydric Soils (miles)	Compaction on Prone (miles)	Stoney – Rocky (miles)	Shallow Bedrock (miles)	Droghty (miles)
Steele City	MT	McCone	110.711	110.749	0.038	MT055	Busby-Twilight-Fleak complex, 8 to 15 percent slopes	0.008	0.017	0.014	0.000	0.000	0.003	0.000	0.000	0.000
Steele City	MT	McCone	110.749	110.881	0.132	MT055	Busby-Yamac-Fleak complex, 15 to 45 percent slopes	0.066	0.124	0.048	0.000	0.000	0.046	0.003	0.000	0.000
Steele City	MT	McCone	110.881	110.956	0.075	MT055	Busby-Twilight-Fleak complex, 8 to 15 percent slopes	0.015	0.035	0.029	0.000	0.000	0.006	0.000	0.000	0.000
Steele City	MT	McCone	110.956	111.064	0.108	MT055	Evanston-Gerdrum complex, 2 to 8 percent slopes	0.000	0.000	0.043	0.000	0.000	0.108	0.000	0.000	0.000
Steele City	MT	McCone	111.064	111.128	0.064	MT055	Kremlin loam, 0 to 4 percent slopes	0.000	0.000	0.003	0.064	0.000	0.061	0.000	0.000	0.000
Steele City	MT	McCone	111.128	111.238	0.110	MT055	Evanston-Gerdrum complex, 2 to 8 percent slopes	0.000	0.000	0.044	0.000	0.000	0.110	0.000	0.000	0.000
Steele City	MT	McCone	111.238	111.274	0.036	MT055	Typic Ustifluvents, saline	0.000	0.000	0.003	0.000	0.001	0.004	0.000	0.000	0.000
Steele City	MT	McCone	111.274	111.284	0.010	MT055	Ustic torriorthents-Ustic torrifluvents association	0.000	0.001	0.001	0.000	0.000	0.001	0.000	0.000	0.000
Steele City	MT	McCone	111.284	111.322	0.039	MT055	Yamac loam, 0 to 4 percent slopes	0.000	0.000	0.038	0.039	0.000	0.037	0.000	0.000	0.000
Steele City	MT	McCone	111.322	111.431	0.109	MT055	Gerdrum-Absher clay loams, 0 to 8 percent slopes	0.004	0.000	0.100	0.000	0.000	0.105	0.000	0.000	0.000
Steele City	MT	McCone	111.431	111.475	0.044	MT055	Rominell loam, 0 to 8 percent slopes	0.000	0.000	0.042	0.000	0.000	0.043	0.000	0.000	0.000
Steele City	MT	McCone	111.475	111.538	0.063	MT055	Rominell loam, gullied, 0 to 8 percent slopes	0.000	0.000	0.058	0.000	0.000	0.061	0.000	0.000	0.000
Steele City	MT	McCone	111.538	111.578	0.040	MT055	Chinook fine sandy loam, 8 to 15 percent slopes	0.002	0.003	0.003	0.000	0.000	0.003	0.000	0.000	0.000
Steele City	MT	McCone	111.578	111.690	0.113	MT055	Evanston-Gerdrum complex, 2 to 8 percent slopes	0.000	0.000	0.045	0.000	0.000	0.113	0.000	0.000	0.000
Steele City	MT	McCone	111.690	111.729	0.039	MT055	Rominell loam, gullied, 0 to 8 percent slopes	0.000	0.000	0.036	0.000	0.000	0.038	0.000	0.000	0.000
Steele City	MT	McCone	111.729	111.863	0.134	MT055	Benz clay loam, 0 to 8 percent slopes	0.003	0.000	0.130	0.000	0.000	0.131	0.000	0.000	0.000
Steele City	MT	McCone	111.863	112.249	0.386	MT055	Badland	0.000	0.050	0.058	0.000	0.000	0.058	0.008	0.000	0.000
Steele City	MT	McCone	112.249	112.375	0.126	MT055	Rominell loam, gullied, 0 to 8 percent slopes	0.000	0.000	0.117	0.000	0.000	0.122	0.000	0.000	0.000
Steele City	MT	McCone	112.375	112.418	0.043	MT055	Busby-Fleak complex, 15 to 45 percent slopes	0.034	0.041	0.006	0.000	0.000	0.006	0.003	0.000	0.000
Steele City	MT	McCone	112.418	112.585	0.167	MT055	Yawdim-Badland-Cabbart association	0.017	0.117	0.058	0.000	0.000	0.108	0.008	0.000	0.000
Steele City	MT	McCone	112.585	112.623	0.038	MT055	Yamac loam, 8 to 15 percent slopes	0.001	0.034	0.037	0.000	0.000	0.035	0.000	0.000	0.000
Steele City	MT	McCone	112.623	112.831	0.208	MT055	Creed loam, 0 to 8 percent slopes	0.000	0.000	0.194	0.000	0.000	0.204	0.000	0.000	0.000
Steele City	MT	McCone	112.831	112.842	0.011	MT055	Busby-Twilight-Fleak complex, 8 to 15 percent slopes	0.002	0.005	0.004	0.000	0.000	0.001	0.000	0.000	0.000
Steele City	MT	McCone	112.842	112.925	0.083	MT055	Gerdrum clay loam, 0 to 8 percent slopes	0.000	0.000	0.082	0.000	0.000	0.083	0.002	0.000	0.000
Steele City	MT	McCone	112.925	112.977	0.052	MT055	Creed loam, 0 to 8 percent slopes	0.000	0.000	0.048	0.000	0.000	0.051	0.000	0.000	0.000
Steele City	MT	McCone	112.977	113.045	0.068	MT055	Rominell-Yamac loams, 4 to 15 percent slopes	0.001	0.029	0.061	0.000	0.000	0.063	0.000	0.000	0.000
Steele City	MT	McCone	113.045	113.087	0.042	MT055	Rominell loam, 0 to 8 percent slopes	0.000	0.000	0.040	0.000	0.000	0.041	0.000	0.000	0.000
Steele City	MT	McCone	113.087	113.100	0.013	MT055	Hillon loam, 15 to 45 percent slopes	0.000	0.012	0.001	0.000	0.000	0.013	0.000	0.000	0.000
Steele City	MT	McCone	113.100	113.157	0.057	MT055	Rominell loam, 0 to 8 percent slopes	0.000	0.000	0.055	0.000	0.000	0.056	0.000	0.000	0.000
Steele City	MT	McCone	113.157	113.379	0.223	MT055	Hillon loam, 15 to 45 percent slopes	0.000	0.207	0.018	0.000	0.000	0.216	0.000	0.000	0.000
Steele City	MT	McCone	113.379	113.480	0.100	MT055	Hillon loam, 2 to 8 percent slopes	0.000	0.000	0.015	0.000	0.000	0.100	0.004	0.000	0.000
Steele City	MT	McCone	113.480	113.585	0.105	MT055	Ustic torriorthents-Ustic torrifluvents association	0.000	0.006	0.013	0.000	0.002	0.016	0.000	0.000	0.000
Steele City	MT	McCone	113.585	113.618	0.033	MT055	Hillon loam, 2 to 8 percent slopes	0.000	0.000	0.005	0.000	0.000	0.033	0.001	0.000	0.000
Steele City	MT	McCone	113.618	113.642	0.024	MT055	Yamacall loam, 4 to 8 percent slopes	0.000	0.000	0.004	0.000	0.000	0.023	0.000	0.000	0.000
Steele City	MT	McCone	113.642	113.723	0.081	MT055	Ustic torriorthents-Ustic torrifluvents association	0.000	0.005	0.010	0.000	0.002	0.012	0.000	0.000	0.000
Steele City	MT	McCone	113.723	113.825	0.102	MT055	Twilight-Yetull fine sandy loams, 8 to 15 percent slopes	0.003	0.013	0.099	0.000	0.000	0.017	0.000	0.000	0.000
Steele City	MT	McCone	113.825	113.869	0.044	MT055	Cabbart-Yawdim complex, 15 to 45 percent slopes	0.007	0.042	0.023	0.000	0.000	0.038	0.000	0.000	0.000
Steele City	MT	McCone	113.869	113.958	0.089	MT055	Gerdrum-Absher clay loams, 0 to 8 percent slopes	0.004	0.000	0.082	0.000	0.000	0.085	0.000	0.000	0.000
Steele City	MT	McCone	113.958	113.996	0.038	MT055	Cabbart-Yawdim complex, 15 to 45 percent slopes	0.006	0.036	0.019	0.000	0.000	0.033	0.000	0.000	0.000
Steele City	MT	McCone	113.996	114.016	0.020	MT055	Cambeth-Twilight-Cabbart complex, 4 to 15 percent	0.000	0.014	0.019	0.000	0.000	0.014	0.000	0.000	0.000

Appendix K – Soils by Milepost – Steele City Segment

Pipeline Segment	State	County	Beginning Milepost	Ending Milepost	Miles	Soil Series	Soil Series Name	Wind (miles)	Water (miles)	Low revegetation on Potential (miles)	Prime Farmland (miles)	Hydric Soils (miles)	Compaction on Prone (miles)	Stoney – Rocky (miles)	Shallow Bedrock (miles)	Droghty (miles)
							slopes									
Steele City	MT	McCone	114.016	114.079	0.062	MT055	Gerdrum-Absher clay loams, 0 to 8 percent slopes	0.002	0.000	0.057	0.000	0.000	0.060	0.000	0.000	0.000
Steele City	MT	McCone	114.079	114.118	0.040	MT055	Kremlin loam, 0 to 4 percent slopes	0.000	0.000	0.002	0.040	0.000	0.038	0.000	0.000	0.000
Steele City	MT	McCone	114.118	114.124	0.005	MT055	Gerdrum clay loam, 0 to 8 percent slopes	0.000	0.000	0.005	0.000	0.000	0.005	0.000	0.000	0.000
Steele City	MT	McCone	114.124	114.202	0.078	MT055	Lonna-Havre-Glendive complex, 0 to 2 percent slopes	0.002	0.000	0.077	0.000	0.002	0.057	0.000	0.000	0.000
Steele City	MT	McCone	114.202	114.315	0.113	MT055	Gerdrum clay loam, 0 to 8 percent slopes	0.000	0.000	0.112	0.000	0.000	0.113	0.003	0.000	0.000
Steele City	MT	McCone	114.315	114.470	0.155	MT055	Chinook fine sandy loam, gullied, 2 to 8 percent slopes	0.006	0.000	0.017	0.000	0.000	0.009	0.000	0.000	0.000
Steele City	MT	McCone	114.470	114.488	0.018	MT055	Badland	0.000	0.002	0.003	0.000	0.000	0.003	0.000	0.000	0.000
Steele City	MT	McCone	114.488	114.569	0.081	MT055	Chinook fine sandy loam, gullied, 2 to 8 percent slopes	0.003	0.000	0.009	0.000	0.000	0.005	0.000	0.000	0.000
Steele City	MT	McCone	114.569	114.850	0.281	MT055	Badland	0.000	0.036	0.042	0.000	0.000	0.042	0.006	0.000	0.000
Steele City	MT	McCone	114.850	114.874	0.024	MT055	Benz clay loam, 0 to 8 percent slopes	0.000	0.000	0.023	0.000	0.000	0.024	0.000	0.000	0.000
Steele City	MT	McCone	114.874	114.903	0.029	MT055	Rominell loam, gullied, 0 to 8 percent slopes	0.000	0.000	0.027	0.000	0.000	0.028	0.000	0.000	0.000
Steele City	MT	McCone	114.903	114.949	0.046	MT055	Benz clay loam, 0 to 8 percent slopes	0.001	0.000	0.045	0.000	0.000	0.045	0.000	0.000	0.000
Steele City	MT	McCone	114.949	115.000	0.051	MT055	Rominell loam, gullied, 0 to 8 percent slopes	0.000	0.000	0.048	0.000	0.000	0.050	0.000	0.000	0.000
Steele City	MT	McCone	115.000	115.271	0.271	MT055	Rominell loam, 0 to 8 percent slopes	0.000	0.000	0.260	0.000	0.000	0.266	0.000	0.000	0.000
Steele City	MT	McCone	115.271	115.313	0.042	MT055	Absher clay loam, 8 to 15 percent slopes	0.000	0.040	0.037	0.000	0.000	0.042	0.001	0.000	0.000
Steele City	MT	McCone	115.313	115.360	0.048	MT055	Gerdrum clay loam, 0 to 8 percent slopes	0.000	0.000	0.047	0.000	0.000	0.048	0.001	0.000	0.000
Steele City	MT	McCone	115.360	115.451	0.090	MT055	Lonna-Havre-Glendive complex, 0 to 2 percent slopes	0.002	0.000	0.088	0.000	0.003	0.066	0.000	0.000	0.000
Steele City	MT	McCone	115.451	115.474	0.023	MT055	Yamac loam, 0 to 4 percent slopes	0.000	0.000	0.023	0.023	0.000	0.022	0.000	0.000	0.000
Steele City	MT	McCone	115.474	115.507	0.033	MT055	Ustic torriorthents-Ustic torrifluvents association	0.000	0.002	0.004	0.000	0.001	0.005	0.000	0.000	0.000
Steele City	MT	McCone	115.507	115.544	0.037	MT055	Hillon loam, 2 to 8 percent slopes	0.000	0.000	0.006	0.000	0.000	0.037	0.001	0.000	0.000
Steele City	MT	McCone	115.544	115.630	0.086	MT055	Yawdim silty clay, 2 to 8 percent slopes	0.000	0.000	0.010	0.000	0.000	0.084	0.000	0.000	0.000
Steele City	MT	McCone	115.630	115.704	0.074	MT055	Hillon loam, 2 to 8 percent slopes	0.000	0.000	0.011	0.000	0.000	0.074	0.003	0.000	0.000
Steele City	MT	McCone	115.704	115.745	0.041	MT055	Kremlin loam, 0 to 4 percent slopes	0.000	0.000	0.002	0.041	0.000	0.039	0.000	0.000	0.000
Steele City	MT	McCone	115.745	116.014	0.269	MT055	Rominell loam, 0 to 8 percent slopes	0.000	0.000	0.258	0.000	0.000	0.264	0.000	0.000	0.000
Steele City	MT	McCone	116.014	116.172	0.158	MT055	Yawdim-Badland-Gerdrum association	0.013	0.104	0.051	0.000	0.000	0.098	0.000	0.000	0.000
Steele City	MT	McCone	116.172	116.405	0.233	MT055	Busby-Yamac-Fleak complex, 15 to 45 percent slopes	0.117	0.219	0.084	0.000	0.000	0.082	0.005	0.000	0.000
Steele City	MT	McCone	116.405	116.454	0.049	MT055	Weingart clay, 2 to 8 percent slopes	0.000	0.000	0.045	0.000	0.000	0.049	0.001	0.000	0.000
Steele City	MT	McCone	116.454	116.506	0.052	MT055	Badland	0.000	0.007	0.008	0.000	0.000	0.008	0.001	0.000	0.000
Steele City	MT	McCone	116.506	116.539	0.033	MT055	Cabbart-Yawdim complex, 4 to 15 percent slopes	0.000	0.031	0.021	0.000	0.000	0.031	0.000	0.000	0.000
Steele City	MT	McCone	116.539	116.658	0.119	MT055	Gerdrum clay loam, 0 to 8 percent slopes	0.000	0.000	0.118	0.000	0.000	0.119	0.004	0.000	0.000
Steele City	MT	McCone	116.658	116.724	0.066	MT055	Hillon loam, 2 to 8 percent slopes	0.000	0.000	0.010	0.000	0.000	0.066	0.003	0.000	0.000
Steele City	MT	McCone	116.724	116.939	0.215	MT055	Cabbart-Twilight complex, 15 to 45 percent slopes	0.030	0.204	0.167	0.000	0.000	0.103	0.000	0.000	0.000
Steele City	MT	McCone	116.939	117.046	0.107	MT055	Yamac-Twilight-Fleak complex, 8 to 15 percent slopes	0.021	0.046	0.078	0.000	0.000	0.046	0.000	0.000	0.000
Steele City	MT	McCone	117.046	117.108	0.062	MT055	Telstad-Hillon loams, 2 to 8 percent slopes	0.000	0.000	0.036	0.000	0.000	0.062	0.000	0.000	0.000
Steele City	MT	McCone	117.108	117.181	0.073	MT055	Hillon loam, 8 to 15 percent slopes	0.000	0.071	0.009	0.000	0.000	0.073	0.003	0.000	0.000
Steele City	MT	McCone	117.181	117.274	0.093	MT055	Thoeny loam, 2 to 8 percent slopes	0.000	0.000	0.085	0.000	0.000	0.093	0.000	0.000	0.000
Steele City	MT	McCone	117.274	117.315	0.042	MT055	Yawdim-Kirby complex, 8 to 35 percent slopes	0.003	0.042	0.005	0.000	0.000	0.025	0.015	0.000	0.000
Steele City	MT	McCone	117.315	117.514	0.199	MT055	Gerdrum-Absher clay loams, 0 to 8 percent slopes	0.008	0.000	0.183	0.000	0.000	0.191	0.000	0.000	0.000

Appendix K – Soils by Milepost – Steele City Segment

Pipeline Segment	State	County	Beginning Milepost	Ending Milepost	Miles	Soil Series	Soil Series Name	Wind (miles)	Water (miles)	Low revegetation on Potential (miles)	Prime Farmland (miles)	Hydric Soils (miles)	Compaction on Prone (miles)	Stoney – Rocky (miles)	Shallow Bedrock (miles)	Droghty (miles)
Steele City	MT	McCone	117.514	117.551	0.037	MT055	Telstad loam, 2 to 8 percent slopes	0.000	0.000	0.003	0.000	0.000	0.037	0.000	0.000	0.000
Steele City	MT	McCone	117.551	117.656	0.105	MT055	Cabbart-Yawdim complex, 4 to 15 percent slopes	0.000	0.101	0.068	0.000	0.000	0.101	0.000	0.000	0.000
Steele City	MT	McCone	117.656	117.698	0.042	MT055	Gerdrum-Absher clay loams, 0 to 8 percent slopes	0.002	0.000	0.039	0.000	0.000	0.041	0.000	0.000	0.000
Steele City	MT	McCone	117.698	117.766	0.068	MT055	Cambeth silt loam, 2 to 8 percent slopes	0.000	0.000	0.063	0.000	0.000	0.066	0.000	0.000	0.000
Steele City	MT	McCone	117.766	118.120	0.354	MT055	Gerdrum-Absher clay loams, 0 to 8 percent slopes	0.014	0.000	0.325	0.000	0.000	0.340	0.000	0.000	0.000
Steele City	MT	McCone	118.120	118.201	0.081	MT055	Gerdrum-Yawdim-Fleak complex, 8 to 45 percent slopes	0.040	0.073	0.037	0.000	0.000	0.057	0.006	0.000	0.000
Steele City	MT	McCone	118.201	118.311	0.110	MT055	Typic Fluvaquents, saline	0.000	0.001	0.006	0.000	0.000	0.009	0.000	0.000	0.000
Steele City	MT	McCone	118.311	118.440	0.129	MT055	Cambeth-Twilight-Cabbart complex, 4 to 15 percent slopes	0.000	0.087	0.123	0.000	0.000	0.087	0.000	0.000	0.000
Steele City	MT	McCone	118.440	118.469	0.029	MT055	Yawdim silty clay, 2 to 8 percent slopes	0.000	0.000	0.003	0.000	0.000	0.028	0.000	0.000	0.000
Steele City	MT	McCone	118.469	118.492	0.023	MT055	Typic Fluvaquents, saline	0.000	0.000	0.001	0.000	0.000	0.002	0.000	0.000	0.000
Steele City	MT	McCone	118.492	118.655	0.163	MT055	Yawdim silty clay, 2 to 8 percent slopes	0.000	0.000	0.020	0.000	0.000	0.158	0.000	0.000	0.000
Steele City	MT	McCone	118.655	119.000	0.345	MT055	Gerdrum-Absher clay loams, 0 to 8 percent slopes	0.014	0.000	0.318	0.000	0.000	0.331	0.000	0.000	0.000
Steele City	MT	McCone	119.000	119.073	0.073	MT055	Ustic torriorthents-Ustic torrifluvents association	0.000	0.004	0.009	0.000	0.001	0.011	0.000	0.000	0.000
Steele City	MT	McCone	119.073	119.128	0.055	MT055	Kremlin loam, 0 to 4 percent slopes	0.000	0.000	0.002	0.055	0.000	0.052	0.000	0.000	0.000
Steele City	MT	McCone	119.128	119.195	0.067	MT055	Havre silt loam	0.000	0.000	0.007	0.067	0.001	0.067	0.000	0.000	0.000
Steele City	MT	McCone	119.195	119.308	0.113	MT055	Weingart clay, 2 to 8 percent slopes	0.000	0.000	0.105	0.000	0.000	0.113	0.003	0.000	0.000
Steele City	MT	McCone	119.308	119.508	0.200	MT055	Evanston-Gerdrum complex, 2 to 8 percent slopes	0.000	0.000	0.080	0.000	0.000	0.200	0.000	0.000	0.000
Steele City	MT	McCone	119.508	119.550	0.042	MT055	Cabbart-Yawdim complex, 4 to 15 percent slopes	0.000	0.041	0.027	0.000	0.000	0.041	0.000	0.000	0.000
Steele City	MT	McCone	119.550	119.838	0.288	MT055	Cambeth-Twilight-Cabbart complex, 4 to 15 percent slopes	0.000	0.193	0.273	0.000	0.000	0.193	0.000	0.000	0.000
Steele City	MT	McCone	119.838	119.902	0.064	MT055	Cabbart-Badland complex, 15 to 45 percent slopes	0.000	0.041	0.027	0.000	0.000	0.033	0.005	0.000	0.000
Steele City	MT	McCone	119.902	119.989	0.087	MT055	Cabbart-Twilight complex, 15 to 45 percent slopes	0.012	0.083	0.068	0.000	0.000	0.042	0.000	0.000	0.000
Steele City	MT	McCone	119.989	120.059	0.071	MT055	Cabbart-Badland complex, 15 to 45 percent slopes	0.000	0.045	0.030	0.000	0.000	0.037	0.006	0.000	0.000
Steele City	MT	McCone	120.059	120.102	0.042	MT055	Busby-Fleak complex, 15 to 45 percent slopes	0.034	0.040	0.006	0.000	0.000	0.006	0.003	0.000	0.000
Steele City	MT	McCone	120.102	120.183	0.081	MT055	Cabbart-Badland complex, 15 to 45 percent slopes	0.000	0.052	0.035	0.000	0.000	0.042	0.006	0.000	0.000
Steele City	MT	McCone	120.183	120.238	0.055	MT055	Cabbart-Twilight complex, 15 to 45 percent slopes	0.008	0.053	0.043	0.000	0.000	0.027	0.000	0.000	0.000
Steele City	MT	McCone	120.238	120.363	0.125	MT055	Rominell-Yamac loams, 4 to 15 percent slopes	0.002	0.054	0.111	0.000	0.000	0.115	0.000	0.000	0.000
Steele City	MT	McCone	120.363	120.491	0.128	MT055	Cabbart-Twilight complex, 15 to 45 percent slopes	0.018	0.122	0.100	0.000	0.000	0.062	0.000	0.000	0.000
Steele City	MT	McCone	120.491	120.508	0.018	MT055	Evanston-Gerdrum complex, 2 to 8 percent slopes	0.000	0.000	0.007	0.000	0.000	0.018	0.000	0.000	0.000
Steele City	MT	McCone	120.508	120.581	0.073	MT055	Cabbart-Twilight complex, 15 to 45 percent slopes	0.010	0.069	0.057	0.000	0.000	0.035	0.000	0.000	0.000
Steele City	MT	McCone	120.581	120.621	0.040	MT055	Cambeth-Twilight-Cabbart complex, 4 to 15 percent slopes	0.000	0.027	0.038	0.000	0.000	0.027	0.000	0.000	0.000
Steele City	MT	McCone	120.621	120.699	0.078	MT055	Gerdrum clay loam, 0 to 8 percent slopes	0.000	0.000	0.077	0.000	0.000	0.078	0.002	0.000	0.000
Steele City	MT	McCone	120.699	120.742	0.043	MT055	Floweree-Cambeth silt loams, 2 to 8 percent slopes	0.000	0.000	0.042	0.000	0.000	0.042	0.001	0.000	0.000
Steele City	MT	McCone	120.742	120.804	0.062	MT055	Cabbart-Twilight complex, 15 to 45 percent slopes	0.009	0.059	0.048	0.000	0.000	0.030	0.000	0.000	0.000
Steele City	MT	McCone	120.804	120.848	0.044	MT055	Floweree-Cambeth silt loams, 2 to 8 percent slopes	0.000	0.000	0.043	0.000	0.000	0.043	0.001	0.000	0.000
Steele City	MT	McCone	120.848	120.979	0.131	MT055	Creed-Gerdrum complex, 0 to 8 percent slopes	0.004	0.000	0.127	0.000	0.000	0.127	0.000	0.000	0.000
Steele City	MT	McCone	120.979	121.000	0.021	MT055	Yawdim silty clay, 2 to 8 percent slopes	0.000	0.000	0.002	0.000	0.000	0.020	0.000	0.000	0.000
Steele City	MT	McCone	121.000	121.128	0.128	MT055	Busby-Twilight-Fleak complex, 8 to 15 percent slopes	0.026	0.059	0.049	0.000	0.000	0.010	0.000	0.000	0.000
Steele City	MT	McCone	121.128	121.233	0.106	MT055	Ethridge silty clay loam, 0 to 4 percent slopes	0.000	0.000	0.007	0.106	0.000	0.106	0.000	0.000	0.000
Steele City	MT	McCone	121.233	121.340	0.106	MT055	Floweree silt loam, 0 to 4 percent slopes	0.000	0.000	0.010	0.000	0.000	0.103	0.000	0.000	0.000
Steele City	MT	McCone	121.340	121.987	0.647	MT055	Ethridge silty clay loam, 0 to 4 percent slopes	0.000	0.000	0.045	0.647	0.000	0.647	0.000	0.000	0.000

Appendix K – Soils by Milepost – Steele City Segment

Pipeline Segment	State	County	Beginning Milepost	Ending Milepost	Miles	Soil Series	Soil Series Name	Wind (miles)	Water (miles)	Low revegetation on Potential (miles)	Prime Farmland (miles)	Hydric Soils (miles)	Compaction on Prone (miles)	Stoney – Rocky (miles)	Shallow Bedrock (miles)	Droghty (miles)
Steele City	MT	McCone	121.987	122.163	0.176	MT055	Gerdrum clay loam, 0 to 8 percent slopes	0.000	0.000	0.175	0.000	0.000	0.176	0.005	0.000	0.000
Steele City	MT	McCone	122.163	122.273	0.109	MT055	Lonna-Havre-Glendive complex, 0 to 2 percent slopes	0.002	0.000	0.107	0.000	0.003	0.109	0.000	0.000	0.000
Steele City	MT	McCone	122.273	122.356	0.084	MT055	Evanston loam, 0 to 2 percent slopes	0.000	0.000	0.005	0.084	0.000	0.084	0.001	0.000	0.000
Steele City	MT	McCone	122.356	122.370	0.013	MT055	Floweree silt loam, 0 to 4 percent slopes	0.000	0.000	0.001	0.000	0.000	0.013	0.000	0.000	0.000
Steele City	MT	McCone	122.370	122.468	0.098	MT055	Gerdrum clay loam, 0 to 8 percent slopes	0.000	0.000	0.097	0.000	0.000	0.098	0.003	0.000	0.000
Steele City	MT	McCone	122.468	122.571	0.103	MT055	Rominell-Yamac loams, 4 to 15 percent slopes	0.002	0.044	0.092	0.000	0.000	0.103	0.000	0.000	0.000
Steele City	MT	McCone	122.571	122.626	0.055	MT055	Floweree silt loam, 0 to 4 percent slopes	0.000	0.000	0.005	0.000	0.000	0.055	0.000	0.000	0.000
Steele City	MT	McCone	122.626	122.673	0.047	MT055	Marias clay	0.000	0.000	0.047	0.000	0.000	0.047	0.000	0.000	0.000
Steele City	MT	McCone	122.673	122.701	0.028	MT055	Floweree silt loam, 0 to 4 percent slopes	0.000	0.000	0.003	0.000	0.000	0.028	0.000	0.000	0.000
Steele City	MT	McCone	122.701	122.796	0.094	MT055	Lonna silty clay loam, 0 to 4 percent slopes	0.000	0.000	0.094	0.000	0.000	0.094	0.000	0.000	0.000
Steele City	MT	McCone	122.796	122.801	0.005	MT055	Ethridge silty clay loam, 0 to 4 percent slopes	0.000	0.000	0.000	0.005	0.000	0.005	0.000	0.000	0.000
Steele City	MT	McCone	122.801	122.909	0.108	MT055	Alona silt loam, 0 to 8 percent slopes	0.000	0.000	0.098	0.000	0.000	0.108	0.000	0.000	0.000
Steele City	MT	McCone	122.909	123.009	0.100	MT055	Lonna-Havre-Glendive complex, 0 to 2 percent slopes	0.002	0.000	0.098	0.000	0.003	0.100	0.000	0.000	0.000
Steele City	MT	McCone	123.009	123.141	0.132	MT055	Gerdrum clay loam, 0 to 8 percent slopes	0.000	0.000	0.130	0.000	0.000	0.132	0.004	0.000	0.000
Steele City	MT	McCone	123.141	123.219	0.078	MT055	Cambeth silt loam, 2 to 8 percent slopes	0.000	0.000	0.072	0.000	0.000	0.078	0.000	0.000	0.000
Steele City	MT	McCone	123.219	123.490	0.271	MT055	Cabbart-Yawdim complex, 4 to 15 percent slopes	0.000	0.260	0.176	0.000	0.000	0.271	0.000	0.000	0.000
Steele City	MT	McCone	123.490	123.500	0.010	MT055	Evanston-Gerdrum complex, 2 to 8 percent slopes	0.000	0.000	0.004	0.000	0.000	0.010	0.000	0.000	0.000
Steele City	MT	McCone	123.500	123.851	0.352	MT055	Kremlin loam, 4 to 8 percent slopes	0.000	0.000	0.025	0.352	0.000	0.352	0.000	0.000	0.000
Steele City	MT	McCone	123.851	123.919	0.068	MT055	Cabbart-Yawdim complex, 4 to 15 percent slopes	0.000	0.065	0.044	0.000	0.000	0.068	0.000	0.000	0.000
Steele City	MT	McCone	123.919	123.980	0.060	MT055	Kremlin loam, 4 to 8 percent slopes	0.000	0.000	0.004	0.060	0.000	0.060	0.000	0.000	0.000
Steele City	MT	McCone	123.980	124.198	0.218	MT055	Cabbart-Yawdim complex, 4 to 15 percent slopes	0.000	0.209	0.142	0.000	0.000	0.218	0.000	0.000	0.000
Steele City	MT	McCone	124.198	124.343	0.145	MT055	Floweree silt loam, 4 to 8 percent slopes	0.000	0.000	0.142	0.000	0.000	0.145	0.000	0.000	0.000
Steele City	MT	McCone	124.343	124.377	0.034	MT055	Floweree-Cambeth silt loams, 2 to 8 percent slopes	0.000	0.000	0.034	0.000	0.000	0.034	0.001	0.000	0.000
Steele City	MT	McCone	124.377	124.451	0.074	MT055	Ustic torriorthents-Ustic torrifluvents association	0.000	0.004	0.009	0.000	0.001	0.074	0.000	0.000	0.000
Steele City	MT	McCone	124.451	124.457	0.006	MT055	Floweree silt loam, 0 to 4 percent slopes	0.000	0.000	0.001	0.000	0.000	0.006	0.000	0.000	0.000
Steele City	MT	McCone	124.457	124.635	0.178	MT055	Floweree-Cambeth silt loams, 2 to 8 percent slopes	0.000	0.000	0.174	0.000	0.000	0.178	0.004	0.000	0.000
Steele City	MT	McCone	124.635	124.735	0.100	MT055	Cambeth-Cabbart silt loams, 8 to 15 percent slopes	0.003	0.097	0.089	0.000	0.000	0.100	0.000	0.000	0.000
Steele City	MT	McCone	124.735	124.890	0.155	MT055	Floweree-Cambeth silt loams, 2 to 8 percent slopes	0.000	0.000	0.152	0.000	0.000	0.155	0.003	0.000	0.000
Steele City	MT	McCone	124.890	124.988	0.098	MT055	Cambeth-Cabbart silt loams, 8 to 15 percent slopes	0.003	0.095	0.087	0.000	0.000	0.098	0.000	0.000	0.000
Steele City	MT	McCone	124.988	125.324	0.336	MT055	Floweree-Cambeth silt loams, 2 to 8 percent slopes	0.000	0.000	0.329	0.000	0.000	0.336	0.007	0.000	0.000
Steele City	MT	McCone	125.324	125.428	0.105	MT055	Floweree silt loam, 0 to 4 percent slopes	0.000	0.000	0.009	0.000	0.000	0.105	0.000	0.000	0.000
Steele City	MT	McCone	125.428	125.836	0.408	MT055	Cabbart-Twilight complex, 15 to 45 percent slopes	0.057	0.388	0.318	0.000	0.000	0.408	0.000	0.000	0.000
Steele City	MT	McCone	125.836	125.967	0.131	MT055	Floweree silt loam, 0 to 4 percent slopes	0.000	0.000	0.012	0.000	0.000	0.131	0.000	0.000	0.000
Steele City	MT	McCone	125.967	126.047	0.080	MT055	Lonna-Havre-Glendive complex, 0 to 2 percent slopes	0.002	0.000	0.078	0.000	0.002	0.080	0.000	0.000	0.000
Steele City	MT	McCone	126.047	126.102	0.055	MT055	Ustic torriorthents-Ustic torrifluvents association	0.000	0.003	0.007	0.000	0.001	0.055	0.000	0.000	0.000
Steele City	MT	McCone	126.102	126.499	0.397	MT055	Floweree silt loam, 0 to 4 percent slopes	0.000	0.000	0.036	0.000	0.000	0.397	0.000	0.000	0.000
Steele City	MT	McCone	126.499	126.692	0.193	MT055	Cabbart silt loam, 15 to 25 percent slopes	0.012	0.189	0.168	0.000	0.000	0.193	0.000	0.000	0.000
Steele City	MT	McCone	126.692	126.786	0.094	MT055	Alona silt loam, 0 to 8 percent slopes	0.000	0.000	0.085	0.000	0.000	0.094	0.000	0.000	0.000
Steele City	MT	McCone	126.786	126.928	0.143	MT055	Lonna silty clay loam, 0 to 4 percent slopes	0.000	0.000	0.143	0.000	0.000	0.143	0.000	0.000	0.000
Steele City	MT	McCone	126.928	127.009	0.080	MT055	Cabbart silt loam, 15 to 25 percent slopes	0.005	0.078	0.070	0.000	0.000	0.080	0.000	0.000	0.000
Steele City	MT	McCone	127.009	127.094	0.085	MT055	Floweree silt loam, 0 to 4 percent slopes	0.000	0.000	0.008	0.000	0.000	0.085	0.000	0.000	0.000
Steele City	MT	McCone	127.094	127.167	0.074	MT055	Alona silt loam, 0 to 8 percent slopes	0.000	0.000	0.067	0.000	0.000	0.074	0.000	0.000	0.000

Appendix K – Soils by Milepost – Steele City Segment

Pipeline Segment	State	County	Beginning Milepost	Ending Milepost	Miles	Soil Series	Soil Series Name	Wind (miles)	Water (miles)	Low revegetation on Potential (miles)	Prime Farmland (miles)	Hydric Soils (miles)	Compaction on Prone (miles)	Stoney – Rocky (miles)	Shallow Bedrock (miles)	Droghty (miles)
Steele City	MT	McCone	127.167	127.266	0.099	MT055	Floweree silt loam, 0 to 4 percent slopes	0.000	0.000	0.009	0.000	0.000	0.099	0.000	0.000	0.000
Steele City	MT	McCone	127.266	127.317	0.051	MT055	Alona silt loam, 0 to 8 percent slopes	0.000	0.000	0.046	0.000	0.000	0.051	0.000	0.000	0.000
Steele City	MT	McCone	127.317	127.408	0.091	MT055	Floweree silt loam, 0 to 4 percent slopes	0.000	0.000	0.008	0.000	0.000	0.091	0.000	0.000	0.000
Steele City	MT	McCone	127.408	127.416	0.008	MT055	Gerdrum-Absher clay loams, 0 to 8 percent slopes	0.000	0.000	0.007	0.000	0.000	0.008	0.000	0.000	0.000
Steele City	MT	McCone	127.416	127.464	0.048	MT055	Cabbart-Badland complex, 15 to 45 percent slopes	0.000	0.031	0.021	0.000	0.000	0.048	0.004	0.000	0.000
Steele City	MT	McCone	127.464	127.645	0.182	MT055	Alona silt loam, saline, 0 to 2 percent slopes	0.000	0.000	0.174	0.000	0.004	0.182	0.000	0.000	0.000
Steele City	MT	McCone	127.645	127.726	0.081	MT055	Floweree silt loam, 0 to 4 percent slopes	0.000	0.000	0.007	0.000	0.000	0.081	0.000	0.000	0.000
Steele City	MT	McCone	127.726	127.794	0.067	MT055	Kremlin loam, 4 to 8 percent slopes	0.000	0.000	0.005	0.067	0.000	0.067	0.000	0.000	0.000
Steele City	MT	McCone	127.794	127.968	0.175	MT055	Floweree silt loam, 0 to 4 percent slopes	0.000	0.000	0.016	0.000	0.000	0.175	0.000	0.000	0.000
Steele City	MT	McCone	127.968	128.031	0.063	MT055	Cambeth silt loam, 2 to 8 percent slopes	0.000	0.000	0.058	0.000	0.000	0.063	0.000	0.000	0.000
Steele City	MT	McCone	128.031	128.097	0.066	MT055	Cambeth-Twilight-Cabbart complex, 4 to 15 percent slopes	0.000	0.044	0.063	0.000	0.000	0.066	0.000	0.000	0.000
Steele City	MT	McCone	128.097	128.128	0.030	MT055	Floweree silt loam, 0 to 4 percent slopes	0.000	0.000	0.003	0.000	0.000	0.030	0.000	0.000	0.000
Steele City	MT	McCone	128.128	128.185	0.057	MT055	Cabbart silt loam, 15 to 25 percent slopes	0.003	0.056	0.050	0.000	0.000	0.057	0.000	0.000	0.000
Steele City	MT	McCone	128.185	128.185	0.000	MT055	Lonna silty clay loam, 0 to 4 percent slopes	0.000	0.000	0.000	0.000	0.000	0.000	0.000	0.000	0.000
Steele City	MT	McCone	128.185	128.366	0.181	MT055	Busby-Fleak complex, 15 to 45 percent slopes	0.145	0.172	0.027	0.000	0.000	0.181	0.013	0.000	0.000
Steele City	MT	McCone	128.366	128.465	0.099	MT055	Cambeth-Twilight-Cabbart complex, 4 to 15 percent slopes	0.000	0.066	0.094	0.000	0.000	0.099	0.000	0.000	0.000
Steele City	MT	McCone	128.465	128.641	0.176	MT055	Alona silt loam, 0 to 8 percent slopes	0.000	0.000	0.161	0.000	0.000	0.176	0.000	0.000	0.000
Steele City	MT	McCone	128.641	128.752	0.111	MT055	Cambeth silt loam, 2 to 8 percent slopes	0.000	0.000	0.102	0.000	0.000	0.111	0.000	0.000	0.000
Steele City	MT	McCone	128.752	128.809	0.057	MT055	Cabbart-Kirby complex, 8 to 45 percent slopes	0.000	0.056	0.034	0.000	0.000	0.057	0.020	0.000	0.000
Steele City	MT	McCone	128.809	128.833	0.023	MT055	Cambeth-Cabbart silt loams, 8 to 15 percent slopes	0.001	0.023	0.021	0.000	0.000	0.023	0.000	0.000	0.000
Steele City	MT	McCone	128.833	128.872	0.039	MT055	Cabbart-Kirby complex, 8 to 45 percent slopes	0.000	0.038	0.023	0.000	0.000	0.039	0.014	0.000	0.000
Steele City	MT	McCone	128.872	128.932	0.061	MT055	Cambeth-Cabbart silt loams, 8 to 15 percent slopes	0.002	0.059	0.054	0.000	0.000	0.061	0.000	0.000	0.000
Steele City	MT	McCone	128.932	128.943	0.011	MT055	Cabbart-Kirby complex, 8 to 45 percent slopes	0.000	0.011	0.007	0.000	0.000	0.011	0.004	0.000	0.000
Steele City	MT	McCone	128.943	128.978	0.034	MT055	Busby-Fleak complex, 15 to 45 percent slopes	0.027	0.033	0.005	0.000	0.000	0.034	0.002	0.000	0.000
Steele City	MT	McCone	128.978	129.094	0.117	MT055	Busby fine sandy loam, 2 to 8 percent slopes	0.004	0.000	0.018	0.117	0.000	0.117	0.000	0.000	0.000
Steele City	MT	McCone	129.094	129.387	0.293	MT055	Kremlin loam, 4 to 8 percent slopes	0.000	0.000	0.021	0.293	0.000	0.293	0.000	0.000	0.000
Steele City	MT	McCone	129.387	129.486	0.099	MT055	Floweree-Cambeth silt loams, 2 to 8 percent slopes	0.000	0.000	0.097	0.000	0.000	0.099	0.002	0.000	0.000
Steele City	MT	McCone	129.486	129.525	0.039	MT055	Cambeth-Cabbart silt loams, 8 to 15 percent slopes	0.001	0.038	0.035	0.000	0.000	0.039	0.000	0.000	0.000
Steele City	MT	McCone	129.525	129.793	0.268	MT055	Floweree-Cambeth silt loams, 2 to 8 percent slopes	0.000	0.000	0.263	0.000	0.000	0.268	0.005	0.000	0.000
Steele City	MT	McCone	129.793	130.033	0.241	MT055	Cambeth silt loam, 2 to 8 percent slopes	0.000	0.000	0.221	0.000	0.000	0.241	0.000	0.000	0.000
Steele City	MT	McCone	130.033	130.156	0.122	MT055	Floweree silt loam, 4 to 8 percent slopes	0.000	0.000	0.120	0.000	0.000	0.122	0.000	0.000	0.000
Steele City	MT	McCone	130.156	130.211	0.055	MT055	Yamacall loam, 4 to 8 percent slopes	0.000	0.000	0.008	0.000	0.000	0.055	0.000	0.000	0.000
Steele City	MT	McCone	130.211	130.384	0.173	MT055	Floweree silt loam, 4 to 8 percent slopes	0.000	0.000	0.170	0.000	0.000	0.173	0.000	0.000	0.000
Steele City	MT	McCone	130.384	130.439	0.055	MT055	Yamac-Twilight-Fleak complex, 8 to 15 percent slopes	0.011	0.024	0.040	0.000	0.000	0.055	0.000	0.000	0.000
Steele City	MT	McCone	130.439	130.705	0.266	MT055	Floweree silt loam, 0 to 4 percent slopes	0.000	0.000	0.024	0.000	0.000	0.266	0.000	0.000	0.000
Steele City	MT	McCone	130.705	130.786	0.082	MT055	Cabbart silt loam, 15 to 25 percent slopes	0.005	0.080	0.071	0.000	0.000	0.082	0.000	0.000	0.000
Steele City	MT	McCone	130.786	130.894	0.108	MT055	Floweree-Cambeth silt loams, 2 to 8 percent slopes	0.000	0.000	0.106	0.000	0.000	0.108	0.002	0.000	0.000
Steele City	MT	McCone	130.894	131.014	0.120	MT055	Cambeth-Cabbart silt loams, 8 to 15 percent slopes	0.004	0.117	0.107	0.000	0.000	0.120	0.000	0.000	0.000
Steele City	MT	McCone	131.014	131.113	0.099	MT055	Floweree silt loam, 0 to 4 percent slopes	0.000	0.000	0.009	0.000	0.000	0.099	0.000	0.000	0.000
Steele City	MT	McCone	131.113	131.170	0.057	MT055	Cabbart silt loam, 15 to 25 percent slopes	0.003	0.056	0.050	0.000	0.000	0.057	0.000	0.000	0.000
Steele City	MT	McCone	131.170	131.246	0.075	MT055	Yamacall loam, 4 to 8 percent slopes	0.000	0.000	0.011	0.000	0.000	0.075	0.000	0.000	0.000
Steele City	MT	McCone	131.246	131.315	0.069	MT055	Yamac loam, 8 to 15 percent slopes	0.002	0.062	0.067	0.000	0.000	0.069	0.000	0.000	0.000

Appendix K – Soils by Milepost – Steele City Segment

Pipeline Segment	State	County	Beginning Milepost	Ending Milepost	Miles	Soil Series	Soil Series Name	Wind (miles)	Water (miles)	Low revegetation on Potential (miles)	Prime Farmland (miles)	Hydric Soils (miles)	Compaction on Prone (miles)	Stoney – Rocky (miles)	Shallow Bedrock (miles)	Droghty (miles)
Steele City	MT	McCone	131.315	131.487	0.172	MT055	Yamacall loam, 4 to 8 percent slopes	0.000	0.000	0.026	0.000	0.000	0.172	0.000	0.000	0.000
Steele City	MT	McCone	131.487	131.595	0.109	MT055	Floweree-Cambeth silt loams, 2 to 8 percent slopes	0.000	0.000	0.106	0.000	0.000	0.109	0.002	0.000	0.000
Steele City	MT	McCone	131.595	131.664	0.069	MT055	Yamacall loam, 4 to 8 percent slopes	0.000	0.000	0.010	0.000	0.000	0.069	0.000	0.000	0.000
Steele City	MT	McCone	131.664	131.708	0.043	MT055	Floweree-Cambeth silt loams, 2 to 8 percent slopes	0.000	0.000	0.043	0.000	0.000	0.043	0.001	0.000	0.000
Steele City	MT	McCone	131.708	131.788	0.080	MT055	Cambert-Dast-Cabba complex, 4 to 15 percent slopes	0.000	0.055	0.049	0.000	0.000	0.080	0.000	0.000	0.000
Steele City	MT	McCone	131.788	131.857	0.069	MT055	Shambo-Cambert loams, 2 to 8 percent slopes	0.000	0.002	0.032	0.069	0.000	0.069	0.000	0.000	0.000
Steele City	MT	McCone	131.857	131.959	0.102	MT055	Cambert-Cabba loams, 8 to 15 percent slopes	0.000	0.091	0.091	0.000	0.000	0.102	0.000	0.000	0.000
Steele City	MT	McCone	131.959	132.085	0.126	MT055	Shambo-Cambert loams, 2 to 8 percent slopes	0.000	0.004	0.058	0.126	0.000	0.126	0.000	0.000	0.000
Steele City	MT	McCone	132.085	132.215	0.130	MT055	Bryant-Cambert complex, 2 to 8 percent slopes	0.000	0.004	0.056	0.130	0.000	0.130	0.000	0.000	0.000
Steele City	MT	McCone	132.215	132.260	0.045	MT055	Cambert loam, 2 to 8 percent slopes	0.000	0.000	0.041	0.045	0.000	0.045	0.001	0.000	0.000
Steele City	MT	McCone	132.260	132.287	0.027	MT055	Cabba loam, 15 to 25 percent slopes	0.000	0.026	0.024	0.000	0.000	0.027	0.000	0.000	0.000
Steele City	MT	McCone	132.287	132.392	0.105	MT055	Cambert loam, 2 to 8 percent slopes	0.000	0.000	0.094	0.105	0.000	0.105	0.002	0.000	0.000
Steele City	MT	McCone	132.392	132.577	0.185	MT055	Bryant-Cambert complex, 2 to 8 percent slopes	0.000	0.006	0.080	0.185	0.000	0.185	0.000	0.000	0.000
Steele City	MT	McCone	132.577	132.671	0.094	MT055	Cambert loam, 2 to 8 percent slopes	0.000	0.000	0.084	0.094	0.000	0.094	0.002	0.000	0.000
Steele City	MT	McCone	132.671	133.285	0.614	MT055	Bryant silt loam, 0 to 4 percent slopes	0.000	0.000	0.037	0.614	0.000	0.614	0.000	0.000	0.000
Steele City	MT	McCone	133.285	133.446	0.161	MT055	Cherry silt loam, 0 to 4 percent slopes	0.000	0.000	0.011	0.161	0.000	0.161	0.000	0.000	0.000
Steele City	MT	McCone	133.446	133.503	0.057	MT055	Cambert loam, 2 to 8 percent slopes	0.000	0.000	0.051	0.057	0.000	0.057	0.001	0.000	0.000
Steele City	MT	McCone	133.503	133.628	0.125	MT055	Bryant silt loam, 0 to 4 percent slopes	0.000	0.000	0.008	0.125	0.000	0.125	0.000	0.000	0.000
Steele City	MT	McCone	133.628	133.686	0.058	MT055	Barkof silty clay, 2 to 8 percent slopes	0.000	0.002	0.051	0.000	0.000	0.058	0.000	0.000	0.000
Steele City	MT	McCone	133.686	133.962	0.276	MT055	Cambert loam, 2 to 8 percent slopes	0.000	0.000	0.248	0.276	0.000	0.276	0.006	0.000	0.000
Steele City	MT	McCone	133.962	134.203	0.241	MT055	Bryant-Cambert complex, 2 to 8 percent slopes	0.000	0.007	0.104	0.241	0.000	0.241	0.000	0.000	0.000
Steele City	MT	McCone	134.203	134.291	0.088	MT055	Bryant silt loam, 0 to 4 percent slopes	0.000	0.000	0.005	0.088	0.000	0.088	0.000	0.000	0.000
Steele City	MT	McCone	134.291	134.341	0.050	MT055	Typic Ustorthents-Typic Ustifluvents association	0.000	0.002	0.003	0.000	0.001	0.050	0.002	0.000	0.000
Steele City	MT	McCone	134.341	134.588	0.246	MT055	Cambert loam, 2 to 8 percent slopes	0.000	0.000	0.222	0.246	0.000	0.246	0.005	0.000	0.000
Steele City	MT	McCone	134.588	134.756	0.169	MT055	Bryant-Cambert complex, 2 to 8 percent slopes	0.000	0.005	0.073	0.169	0.000	0.169	0.000	0.000	0.000
Steele City	MT	McCone	134.756	134.878	0.122	MT055	Cambert loam, 2 to 8 percent slopes	0.000	0.000	0.109	0.122	0.000	0.122	0.002	0.000	0.000
Steele City	MT	McCone	134.878	134.930	0.052	MT055	Bryant-Cambert complex, 2 to 8 percent slopes	0.000	0.002	0.022	0.052	0.000	0.052	0.000	0.000	0.000
Steele City	MT	McCone	134.930	135.011	0.081	MT055	Cambert-Cabba loams, 8 to 15 percent slopes	0.000	0.072	0.072	0.000	0.000	0.081	0.000	0.000	0.000
Steele City	MT	McCone	135.011	135.161	0.150	MT055	Bryant-Cambert complex, 2 to 8 percent slopes	0.000	0.005	0.065	0.150	0.000	0.150	0.000	0.000	0.000
Steele City	MT	McCone	135.161	135.181	0.019	MT055	Cambert loam, 2 to 8 percent slopes	0.000	0.000	0.017	0.019	0.000	0.019	0.000	0.000	0.000
Steele City	MT	McCone	135.181	135.249	0.068	MT055	Bryant-Cambert complex, 2 to 8 percent slopes	0.000	0.002	0.029	0.068	0.000	0.068	0.000	0.000	0.000
Steele City	MT	McCone	135.249	135.287	0.038	MT055	Bryant silt loam, 0 to 4 percent slopes	0.000	0.000	0.002	0.038	0.000	0.038	0.000	0.000	0.000
Steele City	MT	McCone	135.287	135.351	0.064	MT055	Typic Ustorthents-Typic Ustifluvents association	0.000	0.002	0.003	0.000	0.001	0.064	0.002	0.000	0.000
Steele City	MT	McCone	135.351	135.641	0.290	MT055	Bryant-Cambert complex, 2 to 8 percent slopes	0.000	0.009	0.125	0.290	0.000	0.290	0.000	0.000	0.000
Steele City	MT	McCone	135.641	135.901	0.260	MT055	Cambert-Dast-Cabba complex, 4 to 15 percent slopes	0.000	0.179	0.158	0.000	0.000	0.260	0.000	0.000	0.000
Steele City	MT	McCone	135.901	136.024	0.123	MT055	Bryant-Cambert complex, 2 to 8 percent slopes	0.000	0.004	0.053	0.123	0.000	0.123	0.000	0.000	0.000
Steele City	MT	McCone	136.024	136.098	0.074	MT055	Bryant silt loam, 0 to 4 percent slopes	0.000	0.000	0.004	0.074	0.000	0.074	0.000	0.000	0.000
Steele City	MT	McCone	136.098	136.140	0.042	MT055	Cherry silt loam, 0 to 4 percent slopes	0.000	0.000	0.003	0.042	0.000	0.042	0.000	0.000	0.000
Steele City	MT	McCone	136.140	136.206	0.067	MT055	Typic Ustorthents-Typic Ustifluvents association	0.000	0.002	0.003	0.000	0.001	0.067	0.002	0.000	0.000
Steele City	MT	McCone	136.206	136.373	0.166	MT055	Bryant-Cambert complex, 2 to 8 percent slopes	0.000	0.005	0.072	0.166	0.000	0.166	0.000	0.000	0.000
Steele City	MT	McCone	136.373	136.564	0.191	MT055	Cambert-Barkof-Cabba complex, 4 to 15 percent slopes	0.000	0.172	0.172	0.000	0.000	0.191	0.000	0.000	0.000
Steele City	MT	McCone	136.564	136.732	0.168	MT055	Bryant-Cambert complex, 2 to 8 percent slopes	0.000	0.005	0.072	0.168	0.000	0.168	0.000	0.000	0.000

Appendix K – Soils by Milepost – Steele City Segment

Pipeline Segment	State	County	Beginning Milepost	Ending Milepost	Miles	Soil Series	Soil Series Name	Wind (miles)	Water (miles)	Low revegetation on Potential (miles)	Prime Farmland (miles)	Hydric Soils (miles)	Compaction on Prone (miles)	Stoney – Rocky (miles)	Shallow Bedrock (miles)	Droghty (miles)
Steele City	MT	McCone	136.732	136.868	0.136	MT055	Cambert-Barkof-Cabba complex, 4 to 15 percent slopes	0.000	0.122	0.122	0.000	0.000	0.136	0.000	0.000	0.000
Steele City	MT	McCone	136.868	136.944	0.076	MT055	Bryant-Cambert complex, 2 to 8 percent slopes	0.000	0.002	0.033	0.076	0.000	0.076	0.000	0.000	0.000
Steele City	MT	McCone	136.944	137.119	0.175	MT055	Cambert loam, 2 to 8 percent slopes	0.000	0.000	0.158	0.175	0.000	0.175	0.004	0.000	0.000
Steele City	MT	McCone	137.119	137.167	0.048	MT055	Bryant-Cambert complex, 2 to 8 percent slopes	0.000	0.001	0.020	0.048	0.000	0.048	0.000	0.000	0.000
Steele City	MT	McCone	137.167	137.299	0.132	MT055	Cambert loam, 2 to 8 percent slopes	0.000	0.000	0.119	0.132	0.000	0.132	0.003	0.000	0.000
Steele City	MT	McCone	137.299	137.552	0.253	MT055	Bryant-Cambert complex, 2 to 8 percent slopes	0.000	0.008	0.109	0.253	0.000	0.253	0.000	0.000	0.000
Steele City	MT	McCone	137.552	137.927	0.375	MT055	Cambert-Dast-Cabba complex, 4 to 15 percent slopes	0.000	0.259	0.229	0.000	0.000	0.375	0.000	0.000	0.000
Steele City	MT	McCone	137.927	138.069	0.142	MT055	Cambert loam, 2 to 8 percent slopes	0.000	0.000	0.128	0.142	0.000	0.142	0.003	0.000	0.000
Steele City	MT	McCone	138.069	138.183	0.114	MT055	Cherry silt loam, 0 to 4 percent slopes	0.000	0.000	0.008	0.114	0.000	0.114	0.000	0.000	0.000
Steele City	MT	McCone	138.183	138.268	0.085	MT055	Typic Ustorthents-Typic Ustifluvents association	0.000	0.003	0.004	0.000	0.002	0.085	0.003	0.000	0.000
Steele City	MT	McCone	138.268	138.335	0.067	MT055	Bryant silt loam, 0 to 4 percent slopes	0.000	0.000	0.004	0.067	0.000	0.067	0.000	0.000	0.000
Steele City	MT	McCone	138.335	138.413	0.078	MT055	Cambert-Dast-Cabba complex, 4 to 15 percent slopes	0.000	0.054	0.047	0.000	0.000	0.078	0.000	0.000	0.000
Steele City	MT	McCone	138.413	138.547	0.134	MT055	Cherry silt loam, 0 to 4 percent slopes	0.000	0.000	0.009	0.134	0.000	0.134	0.000	0.000	0.000
Steele City	MT	McCone	138.547	138.620	0.073	MT055	Cambert-Dast-Cabba complex, 4 to 15 percent slopes	0.000	0.050	0.044	0.000	0.000	0.073	0.000	0.000	0.000
Steele City	MT	McCone	138.620	138.676	0.057	MT055	Shambo loam, 0 to 4 percent slopes	0.000	0.000	0.001	0.057	0.000	0.057	0.000	0.000	0.000
Steele City	MT	McCone	138.676	138.711	0.035	MT055	Cherry silt loam, 0 to 4 percent slopes	0.000	0.000	0.002	0.035	0.000	0.035	0.000	0.000	0.000
Steele City	MT	McCone	138.711	138.767	0.056	MT055	Typic Ustorthents-Typic Ustifluvents association	0.000	0.002	0.003	0.000	0.001	0.056	0.002	0.000	0.000
Steele City	MT	McCone	138.767	138.783	0.017	MT055	Cherry silt loam, 0 to 4 percent slopes	0.000	0.000	0.001	0.017	0.000	0.017	0.000	0.000	0.000
Steele City	MT	McCone	138.783	138.975	0.192	MT055	Cambert loam, 2 to 8 percent slopes	0.000	0.000	0.173	0.192	0.000	0.192	0.004	0.000	0.000
Steele City	MT	McCone	138.975	139.130	0.154	MT055	Cambert-Cabba loams, 8 to 15 percent slopes	0.000	0.137	0.137	0.000	0.000	0.154	0.000	0.000	0.000
Steele City	MT	McCone	139.130	139.217	0.088	MT055	Bryant-Cambert complex, 2 to 8 percent slopes	0.000	0.003	0.038	0.088	0.000	0.088	0.000	0.000	0.000
Steele City	MT	McCone	139.217	139.271	0.054	MT055	Bryant silt loam, 0 to 4 percent slopes	0.000	0.000	0.003	0.054	0.000	0.054	0.000	0.000	0.000
Steele City	MT	McCone	139.271	139.318	0.048	MT055	Typic Ustorthents-Typic Ustifluvents association	0.000	0.001	0.002	0.000	0.001	0.048	0.001	0.000	0.000
Steele City	MT	McCone	139.318	139.469	0.150	MT055	Cambert loam, 2 to 8 percent slopes	0.000	0.000	0.135	0.150	0.000	0.150	0.003	0.000	0.000
Steele City	MT	McCone	139.469	139.578	0.110	MT055	Dast-Blanchard complex, 2 to 8 percent slopes	0.038	0.003	0.003	0.000	0.000	0.110	0.000	0.000	0.000
Steele City	MT	McCone	139.578	139.626	0.048	MT055	Dast fine sandy loam, 8 to 15 percent slopes	0.000	0.003	0.001	0.000	0.000	0.048	0.000	0.000	0.000
Steele City	MT	McCone	139.626	139.674	0.048	MT055	Bryant silt loam, 0 to 4 percent slopes	0.000	0.000	0.003	0.048	0.000	0.048	0.000	0.000	0.000
Steele City	MT	McCone	139.674	139.787	0.114	MT055	Cambert-Cabba loams, 8 to 15 percent slopes	0.000	0.101	0.101	0.000	0.000	0.114	0.000	0.000	0.000
Steele City	MT	McCone	139.787	139.863	0.075	MT055	Bryant silt loam, 0 to 4 percent slopes	0.000	0.000	0.005	0.075	0.000	0.075	0.000	0.000	0.000
Steele City	MT	McCone	139.863	139.968	0.105	MT055	Cambert loam, 2 to 8 percent slopes	0.000	0.000	0.095	0.105	0.000	0.105	0.002	0.000	0.000
Steele City	MT	McCone	139.968	140.149	0.182	MT055	Cambert-Dast-Cabba complex, 4 to 15 percent slopes	0.000	0.125	0.111	0.000	0.000	0.182	0.000	0.000	0.000
Steele City	MT	McCone	140.149	140.261	0.111	MT055	Bryant-Cambert complex, 2 to 8 percent slopes	0.000	0.003	0.048	0.111	0.000	0.111	0.000	0.000	0.000
Steele City	MT	McCone	140.261	140.292	0.032	MT055	Cambert-Cabba loams, 8 to 15 percent slopes	0.000	0.028	0.028	0.000	0.000	0.032	0.000	0.000	0.000
Steele City	MT	McCone	140.292	140.322	0.030	MT055	Cambert loam, 2 to 8 percent slopes	0.000	0.000	0.027	0.030	0.000	0.030	0.001	0.000	0.000
Steele City	MT	McCone	140.322	140.346	0.024	MT055	Bryant-Cambert complex, 2 to 8 percent slopes	0.000	0.001	0.010	0.024	0.000	0.024	0.000	0.000	0.000
Steele City	MT	McCone	140.346	140.393	0.047	MT055	Cambert loam, 2 to 8 percent slopes	0.000	0.000	0.042	0.047	0.000	0.047	0.001	0.000	0.000
Steele City	MT	McCone	140.393	140.515	0.122	MT055	Cambert-Cabba loams, 8 to 15 percent slopes	0.000	0.108	0.108	0.000	0.000	0.122	0.000	0.000	0.000
Steele City	MT	McCone	140.515	140.643	0.128	MT055	Cambert loam, 2 to 8 percent slopes	0.000	0.000	0.115	0.128	0.000	0.128	0.003	0.000	0.000
Steele City	MT	McCone	140.643	140.814	0.171	MT055	Cambert-Dast-Cabba complex, 4 to 15 percent slopes	0.000	0.118	0.104	0.000	0.000	0.171	0.000	0.000	0.000

Appendix K – Soils by Milepost – Steele City Segment

Pipeline Segment	State	County	Beginning Milepost	Ending Milepost	Miles	Soil Series	Soil Series Name	Wind (miles)	Water (miles)	Low revegetation on Potential (miles)	Prime Farmland (miles)	Hydric Soils (miles)	Compaction on Prone (miles)	Stoney – Rocky (miles)	Shallow Bedrock (miles)	Droghty (miles)
Steele City	MT	McCone	140.814	140.922	0.108	MT055	Cambert loam, 2 to 8 percent slopes	0.000	0.000	0.097	0.108	0.000	0.108	0.002	0.000	0.000
Steele City	MT	McCone	140.922	141.199	0.277	MT055	Cambert-Cabba loams, 8 to 15 percent slopes	0.000	0.247	0.247	0.000	0.000	0.277	0.000	0.000	0.000
Steele City	MT	McCone	141.199	141.223	0.025	MT055	Cambert loam, 2 to 8 percent slopes	0.000	0.000	0.022	0.025	0.000	0.025	0.000	0.000	0.000
Steele City	MT	McCone	141.223	141.405	0.182	MT055	Cambert-Cabba loams, 8 to 15 percent slopes	0.000	0.162	0.162	0.000	0.000	0.182	0.000	0.000	0.000
Steele City	MT	McCone	141.405	142.121	0.716	MT055	Cambert loam, 2 to 8 percent slopes	0.000	0.000	0.644	0.716	0.000	0.716	0.014	0.000	0.000
Steele City	MT	McCone	142.121	142.278	0.157	MT055	Bryant-Cambert complex, 2 to 8 percent slopes	0.000	0.005	0.068	0.157	0.000	0.157	0.000	0.000	0.000
Steele City	MT	McCone	142.278	142.332	0.054	MT055	Cambert loam, 2 to 8 percent slopes	0.000	0.000	0.049	0.054	0.000	0.054	0.001	0.000	0.000
Steele City	MT	McCone	142.332	142.388	0.056	MT055	Bryant-Cambert complex, 2 to 8 percent slopes	0.000	0.002	0.024	0.056	0.000	0.056	0.000	0.000	0.000
Steele City	MT	McCone	142.388	142.744	0.356	MT055	Cambert loam, 2 to 8 percent slopes	0.000	0.000	0.320	0.356	0.000	0.356	0.007	0.000	0.000
Steele City	MT	McCone	142.744	142.809	0.065	MT055	Cambert-Cabba loams, 8 to 15 percent slopes	0.000	0.058	0.058	0.000	0.000	0.065	0.000	0.000	0.000
Steele City	MT	McCone	142.809	142.855	0.046	MT055	Cambert loam, 2 to 8 percent slopes	0.000	0.000	0.041	0.046	0.000	0.046	0.001	0.000	0.000
Steele City	MT	McCone	142.855	142.941	0.086	MT055	Cambert-Cabba loams, 8 to 15 percent slopes	0.000	0.076	0.076	0.000	0.000	0.086	0.000	0.000	0.000
Steele City	MT	McCone	142.941	143.357	0.416	MT055	Cambert loam, 2 to 8 percent slopes	0.000	0.000	0.374	0.416	0.000	0.416	0.008	0.000	0.000
Steele City	MT	McCone	143.357	143.452	0.095	MT055	Cambert-Cabba loams, 8 to 15 percent slopes	0.000	0.085	0.085	0.000	0.000	0.095	0.000	0.000	0.000
Steele City	MT	McCone	143.452	143.637	0.185	MT055	Cambert loam, 2 to 8 percent slopes	0.000	0.000	0.167	0.185	0.000	0.185	0.004	0.000	0.000
Steele City	MT	McCone	143.637	143.803	0.166	MT055	Bryant-Cambert complex, 2 to 8 percent slopes	0.000	0.005	0.071	0.166	0.000	0.166	0.000	0.000	0.000
Steele City	MT	McCone	143.803	144.027	0.224	MT055	Cambert loam, 2 to 8 percent slopes	0.000	0.000	0.201	0.224	0.000	0.224	0.004	0.000	0.000
Steele City	MT	McCone	144.027	144.287	0.260	MT055	Bryant-Cambert complex, 2 to 8 percent slopes	0.000	0.008	0.112	0.260	0.000	0.260	0.000	0.000	0.000
Steele City	MT	McCone	144.287	144.321	0.033	MT055	Cherry silt loam, 0 to 4 percent slopes	0.000	0.000	0.002	0.033	0.000	0.033	0.000	0.000	0.000
Steele City	MT	McCone	144.321	144.379	0.058	MT055	Cambert loam, 2 to 8 percent slopes	0.000	0.000	0.052	0.058	0.000	0.058	0.001	0.000	0.000
Steele City	MT	McCone	144.379	144.455	0.076	MT055	Cherry silt loam, 0 to 4 percent slopes	0.000	0.000	0.005	0.076	0.000	0.076	0.000	0.000	0.000
Steele City	MT	McCone	144.455	144.600	0.145	MT055	Cambert loam, 2 to 8 percent slopes	0.000	0.000	0.130	0.145	0.000	0.145	0.003	0.000	0.000
Steele City	MT	McCone	144.600	144.674	0.074	MT055	Cherry-Havrelon-Trembles complex, 0 to 2 percent slopes	0.000	0.000	0.004	0.074	0.001	0.074	0.000	0.000	0.000
Steele City	MT	McCone	144.674	144.890	0.216	MT055	Cherry silt loam, 0 to 4 percent slopes	0.000	0.000	0.015	0.216	0.000	0.216	0.000	0.000	0.000
Steele City	MT	McCone	144.890	144.964	0.074	MT055	Cambert loam, 2 to 8 percent slopes	0.000	0.000	0.066	0.074	0.000	0.074	0.001	0.000	0.000
Steele City	MT	McCone	144.964	144.976	0.013	MT055	Cherry silt loam, 0 to 4 percent slopes	0.000	0.000	0.001	0.013	0.000	0.013	0.000	0.000	0.000
Steele City	MT	McCone	144.976	145.107	0.130	MT055	Cambert loam, 2 to 8 percent slopes	0.000	0.000	0.117	0.130	0.000	0.130	0.003	0.000	0.000
Steele City	MT	McCone	145.107	145.345	0.238	MT055	Cherry silt loam, 0 to 4 percent slopes	0.000	0.000	0.017	0.238	0.000	0.238	0.000	0.000	0.000
Steele City	MT	McCone	145.345	145.497	0.152	MT055	Cambert loam, 2 to 8 percent slopes	0.000	0.000	0.137	0.152	0.000	0.152	0.003	0.000	0.000
Steele City	MT	McCone	145.497	145.592	0.095	MT055	Cabba-Wabek-Dast complex, 15 to 45 percent slopes	0.000	0.089	0.042	0.000	0.000	0.095	0.024	0.000	0.000
Steele City	MT	McCone	145.592	145.740	0.149	MT055	Cambert loam, 2 to 8 percent slopes	0.000	0.000	0.134	0.149	0.000	0.149	0.003	0.000	0.000
Steele City	MT	McCone	145.740	145.935	0.195	MT055	Cabba-Wabek-Dast complex, 15 to 45 percent slopes	0.000	0.183	0.086	0.000	0.000	0.195	0.049	0.000	0.000
Steele City	MT	McCone	145.935	146.059	0.124	MT055	Cambert-Cabba loams, 8 to 15 percent slopes	0.000	0.110	0.110	0.000	0.000	0.124	0.000	0.000	0.000
Steele City	MT	McCone	146.059	146.122	0.063	MT055	Cherry-Havrelon-Trembles complex, 0 to 2 percent slopes	0.000	0.000	0.004	0.063	0.001	0.063	0.000	0.000	0.000
Steele City	MT	McCone	146.122	146.229	0.107	MT055	Havrelon loam	0.000	0.000	0.000	0.107	0.000	0.107	0.003	0.000	0.000
Steele City	MT	McCone	146.229	146.442	0.213	MT055	Trembles fine sandy loam	0.000	0.000	0.000	0.213	0.000	0.213	0.015	0.000	0.000
Steele City	MT	McCone	146.442	146.512	0.070	MT055	Typic Fluvaquents, frequently flooded	0.002	0.000	0.000	0.000	0.000	0.070	0.001	0.000	0.000
Steele City	MT	McCone	146.512	146.534	0.023	MT055	Trembles fine sandy loam	0.000	0.000	0.000	0.023	0.000	0.023	0.002	0.000	0.000
Steele City	MT	McCone	146.534	147.349	0.815	MT055	Cherry silt loam, 0 to 4 percent slopes	0.000	0.000	0.057	0.815	0.000	0.815	0.000	0.000	0.000
Steele City	MT	McCone	147.349	147.588	0.239	MT055	Cherry-Havrelon-Trembles complex, 0 to 2 percent slopes	0.000	0.000	0.014	0.239	0.005	0.239	0.000	0.000	0.000

Appendix K – Soils by Milepost – Steele City Segment

Pipeline Segment	State	County	Beginning Milepost	Ending Milepost	Miles	Soil Series	Soil Series Name	Wind (miles)	Water (miles)	Low revegetation on Potential (miles)	Prime Farmland (miles)	Hydric Soils (miles)	Compaction on Prone (miles)	Stoney – Rocky (miles)	Shallow Bedrock (miles)	Droghty (miles)
Steele City	MT	McCone	147.588	147.837	0.250	MT055	Cherry silt loam, 0 to 4 percent slopes	0.000	0.000	0.017	0.250	0.000	0.250	0.000	0.000	0.000
Steele City	MT	McCone	147.837	147.936	0.099	MT055	Bryant silt loam, 0 to 4 percent slopes	0.000	0.000	0.006	0.099	0.000	0.099	0.000	0.000	0.000
Steele City	MT	McCone	147.936	148.087	0.151	MT055	Cambert loam, 2 to 8 percent slopes	0.000	0.000	0.136	0.151	0.000	0.151	0.003	0.000	0.000
Steele City	MT	McCone	148.087	148.294	0.207	MT055	Bryant silt loam, 0 to 4 percent slopes	0.000	0.000	0.012	0.207	0.000	0.207	0.000	0.000	0.000
Steele City	MT	McCone	148.294	148.589	0.295	MT055	Cambert-Cabba loams, 8 to 15 percent slopes	0.000	0.262	0.262	0.000	0.000	0.295	0.000	0.000	0.000
Steele City	MT	McCone	148.589	148.730	0.141	MT055	Bryant silt loam, 0 to 4 percent slopes	0.000	0.000	0.008	0.141	0.000	0.141	0.000	0.000	0.000
Steele City	MT	McCone	148.730	148.840	0.110	MT055	Cambert loam, 2 to 8 percent slopes	0.000	0.000	0.099	0.110	0.000	0.110	0.002	0.000	0.000
Steele City	MT	McCone	148.840	149.066	0.226	MT055	Cambert-Dast-Cabba complex, 4 to 15 percent slopes	0.000	0.156	0.138	0.000	0.000	0.226	0.000	0.000	0.000
Steele City	MT	McCone	149.066	149.182	0.116	MT055	Cherry silt loam, 0 to 4 percent slopes	0.000	0.000	0.008	0.116	0.000	0.116	0.000	0.000	0.000
Steele City	MT	McCone	149.182	149.270	0.088	MT055	Cambert loam, 2 to 8 percent slopes	0.000	0.000	0.079	0.088	0.000	0.088	0.002	0.000	0.000
Steele City	MT	McCone	149.270	149.465	0.195	MT055	Macar loam, 4 to 8 percent slopes	0.000	0.006	0.010	0.195	0.000	0.195	0.002	0.000	0.000
Steele City	MT	McCone	149.465	149.631	0.166	MT055	Cabba-Wabek-Dast complex, 15 to 45 percent slopes	0.000	0.156	0.073	0.000	0.000	0.166	0.042	0.000	0.000
Steele City	MT	McCone	149.631	149.686	0.055	MT055	Shambo loam, 4 to 8 percent slopes	0.000	0.002	0.004	0.055	0.000	0.055	0.001	0.000	0.000
Steele City	MT	McCone	149.686	149.804	0.118	MT055	Bryant silt loam, 0 to 4 percent slopes	0.000	0.000	0.007	0.118	0.000	0.118	0.000	0.000	0.000
Steele City	MT	McCone	149.804	149.877	0.073	MT055	Cherry-Havrelon-Trembles complex, 0 to 2 percent slopes	0.000	0.000	0.004	0.073	0.001	0.073	0.000	0.000	0.000
Steele City	MT	McCone	149.877	150.104	0.228	MT055	Bryant silt loam, 0 to 4 percent slopes	0.000	0.000	0.014	0.228	0.000	0.228	0.000	0.000	0.000
Steele City	MT	McCone	150.104	150.368	0.264	MT055	Shambo loam, 4 to 8 percent slopes	0.000	0.011	0.021	0.264	0.000	0.264	0.005	0.000	0.000
Steele City	MT	McCone	150.368	150.402	0.034	MT055	Cambert-Dast-Cabba complex, 4 to 15 percent slopes	0.000	0.024	0.021	0.000	0.000	0.034	0.000	0.000	0.000
Steele City	MT	McCone	150.402	150.404	0.002	MT055	Cherry-Havrelon-Trembles complex, 0 to 2 percent slopes	0.000	0.000	0.000	0.002	0.000	0.002	0.000	0.000	0.000
Steele City	MT	McCone	150.404	150.484	0.079	MT055	Typic Fluvaquents, saline	0.000	0.001	0.004	0.000	0.000	0.079	0.000	0.000	0.000
Steele City	MT	McCone	150.484	150.771	0.287	MT055	Cherry silt loam, 0 to 4 percent slopes	0.000	0.000	0.020	0.287	0.000	0.287	0.000	0.000	0.000
Steele City	MT	McCone	150.771	150.947	0.176	MT055	Cambert loam, 2 to 8 percent slopes	0.000	0.000	0.159	0.176	0.000	0.176	0.004	0.000	0.000
Steele City	MT	McCone	150.947	151.230	0.284	MT055	Cherry silt loam, 0 to 4 percent slopes	0.000	0.000	0.020	0.284	0.000	0.284	0.000	0.000	0.000
Steele City	MT	McCone	151.230	151.274	0.044	MT055	Typic Ustorthents-Typic Ustifluvents association	0.000	0.001	0.002	0.000	0.001	0.044	0.001	0.000	0.000
Steele City	MT	McCone	151.274	151.678	0.404	MT055	Cherry silt loam, 0 to 4 percent slopes	0.000	0.000	0.028	0.404	0.000	0.404	0.000	0.000	0.000
Steele City	MT	McCone	151.678	151.740	0.062	MT055	Cherry-Havrelon-Trembles complex, 0 to 2 percent slopes	0.000	0.000	0.004	0.062	0.001	0.062	0.000	0.000	0.000
Steele City	MT	McCone	151.740	151.948	0.208	MT055	Cherry silt loam, 0 to 4 percent slopes	0.000	0.000	0.015	0.208	0.000	0.208	0.000	0.000	0.000
Steele City	MT	McCone	151.948	152.215	0.267	MT055	Macar loam, 4 to 8 percent slopes	0.000	0.008	0.013	0.267	0.000	0.267	0.003	0.000	0.000
Steele City	MT	McCone	152.215	152.241	0.026	MT055	Cherry silt loam, 0 to 4 percent slopes	0.000	0.000	0.002	0.026	0.000	0.026	0.000	0.000	0.000
Steele City	MT	McCone	152.241	152.312	0.071	MT055	Macar loam, 4 to 8 percent slopes	0.000	0.002	0.004	0.071	0.000	0.071	0.001	0.000	0.000
Steele City	MT	McCone	152.312	152.350	0.037	MT055	Cambert-Cabba loams, 8 to 15 percent slopes	0.000	0.033	0.033	0.000	0.000	0.037	0.000	0.000	0.000
Steele City	MT	McCone	152.350	152.403	0.054	MT055	Macar-Cambert loams, 2 to 8 percent slopes	0.000	0.000	0.025	0.054	0.000	0.054	0.000	0.000	0.000
Steele City	MT	McCone	152.403	152.807	0.404	MT055	Cambert loam, 2 to 8 percent slopes	0.000	0.000	0.364	0.404	0.000	0.404	0.008	0.000	0.000
Steele City	MT	McCone	152.807	153.055	0.247	MT055	Cherry silt loam, 0 to 4 percent slopes	0.000	0.000	0.017	0.247	0.000	0.247	0.000	0.000	0.000
Steele City	MT	McCone	153.055	153.111	0.056	MT055	Cabba-Wabek-Dast complex, 15 to 45 percent slopes	0.000	0.053	0.025	0.000	0.000	0.056	0.014	0.000	0.000
Steele City	MT	McCone	153.111	153.140	0.029	MT055	Subwell-Peerless loams, 0 to 4 percent slopes	0.000	0.000	0.026	0.000	0.000	0.029	0.027	0.000	0.000
Steele City	MT	McCone	153.140	153.192	0.053	MT055	Cabba-Wabek-Dast complex, 15 to 45 percent slopes	0.000	0.049	0.023	0.000	0.000	0.053	0.013	0.000	0.000

Appendix K – Soils by Milepost – Steele City Segment

Pipeline Segment	State	County	Beginning Milepost	Ending Milepost	Miles	Soil Series	Soil Series Name	Wind (miles)	Water (miles)	Low revegetation on Potential (miles)	Prime Farmland (miles)	Hydric Soils (miles)	Compaction on Prone (miles)	Stoney – Rocky (miles)	Shallow Bedrock (miles)	Droghty (miles)
Steele City	MT	McCone	153.192	153.238	0.046	MT055	Cherry-Havrelon-Trembles complex, 0 to 2 percent slopes	0.000	0.000	0.003	0.046	0.001	0.046	0.000	0.000	0.000
Steele City	MT	McCone	153.238	153.263	0.025	MT055	Cabba-Badland complex, 15 to 45 percent slopes	0.000	0.016	0.009	0.000	0.000	0.025	0.004	0.000	0.000
Steele City	MT	McCone	153.263	153.598	0.335	MT055	Cambert-Cabba loams, 8 to 15 percent slopes	0.000	0.298	0.298	0.000	0.000	0.335	0.000	0.000	0.000
Steele City	MT	McCone	153.598	153.637	0.039	MT055	Macar loam, 8 to 15 percent slopes	0.000	0.038	0.004	0.000	0.000	0.039	0.001	0.000	0.000
Steele City	MT	McCone	153.637	154.074	0.437	MT055	Bryant-Cambert complex, 2 to 8 percent slopes	0.000	0.013	0.188	0.437	0.000	0.437	0.000	0.000	0.000
Steele City	MT	McCone	154.074	154.269	0.195	MT055	Cambert-Cabba loams, 8 to 15 percent slopes	0.000	0.174	0.174	0.000	0.000	0.195	0.000	0.000	0.000
Steele City	MT	McCone	154.269	154.414	0.144	MT055	Bryant-Cambert complex, 2 to 8 percent slopes	0.000	0.004	0.062	0.144	0.000	0.144	0.000	0.000	0.000
Steele City	MT	McCone	154.414	154.722	0.308	MT055	Cambert-Cabba loams, 8 to 15 percent slopes	0.000	0.274	0.274	0.000	0.000	0.308	0.000	0.000	0.000
Steele City	MT	McCone	154.722	154.885	0.164	MT055	Cabba-Barkof complex, 15 to 45 percent slopes	0.000	0.159	0.143	0.000	0.000	0.164	0.000	0.000	0.000
Steele City	MT	McCone	154.885	155.003	0.117	MT055	Cambert-Cabba loams, 8 to 15 percent slopes	0.000	0.104	0.104	0.000	0.000	0.117	0.000	0.000	0.000
Steele City	MT	McCone	155.003	155.039	0.037	MT055	Shambo-Cambert loams, 2 to 8 percent slopes	0.000	0.001	0.017	0.037	0.000	0.037	0.000	0.000	0.000
Steele City	MT	McCone	155.039	155.546	0.507	MT055	Cabba-Barkof complex, 15 to 45 percent slopes	0.000	0.492	0.441	0.000	0.000	0.507	0.000	0.000	0.000
Steele City	MT	McCone	155.546	155.960	0.414	MT055	Macar loam, 4 to 8 percent slopes	0.000	0.012	0.021	0.414	0.000	0.414	0.004	0.000	0.000
Steele City	MT	McCone	155.960	156.174	0.214	MT055	Dast-Blanchard complex, 8 to 25 percent slopes	0.075	0.188	0.009	0.000	0.000	0.214	0.000	0.000	0.000
Steele City	MT	McCone	156.174	156.239	0.065	MT055	Lonna-Cambeth silt loams, 2 to 8 percent slopes	0.000	0.000	0.064	0.000	0.000	0.065	0.001	0.000	0.000
Steele City	MT	McCone	156.239	156.263	0.025	MT055	Cabba-Dast complex, 15 to 45 percent slopes	0.000	0.023	0.012	0.000	0.000	0.025	0.000	0.000	0.000
Steele City	MT	Dawson	156.263	156.339	0.076	MT021	Lambert-Yetull complex, 15 to 65 percent slopes	0.027	0.068	0.041	0.000	0.000	0.076	0.000	0.000	0.000
Steele City	MT	Dawson	156.339	156.530	0.190	MT021	Twilight-Yetull complex, 8 to 25 percent slopes	0.067	0.185	0.118	0.000	0.000	0.190	0.000	0.000	0.000
Steele City	MT	Dawson	156.530	156.644	0.115	MT021	Lonna, Havre, and Glendive soils, 0 to 4 percent slopes, occasionally flooded	0.003	0.000	0.045	0.000	0.006	0.115	0.001	0.000	0.000
Steele City	MT	Dawson	156.644	156.664	0.020	MT021	Terrace escarpments	0.000	0.020	0.000	0.000	0.000	0.020	0.020	0.000	0.000
Steele City	MT	Dawson	156.664	156.793	0.129	MT021	Attewan loam, 2 to 4 percent slopes	0.000	0.000	0.000	0.129	0.000	0.129	0.129	0.000	0.000
Steele City	MT	Dawson	156.793	156.830	0.037	MT021	Kremlin loam, 4 to 8 percent slopes	0.000	0.001	0.037	0.037	0.000	0.037	0.001	0.000	0.000
Steele City	MT	Dawson	156.830	156.888	0.058	MT021	Attewan loam, 2 to 4 percent slopes	0.000	0.000	0.000	0.058	0.000	0.058	0.058	0.000	0.000
Steele City	MT	Dawson	156.888	157.391	0.503	MT021	Lonna-Cambeth silt loams, 2 to 8 percent slopes	0.000	0.000	0.493	0.000	0.000	0.503	0.010	0.000	0.000
Steele City	MT	Dawson	157.391	157.563	0.173	MT021	Chinook fine sandy loam, 4 to 8 percent slopes	0.000	0.000	0.010	0.173	0.000	0.173	0.007	0.000	0.000
Steele City	MT	Dawson	157.563	157.633	0.070	MT021	Lonna-Cambeth-Cabbart silt loams, 4 to 12 percent slopes	0.000	0.066	0.066	0.000	0.000	0.070	0.001	0.000	0.000
Steele City	MT	Dawson	157.633	157.797	0.163	MT021	Twilight-Yetull complex, 2 to 8 percent slopes	0.057	0.000	0.101	0.000	0.000	0.163	0.000	0.000	0.000
Steele City	MT	Dawson	157.797	157.883	0.086	MT021	Twilight-Yetull complex, 8 to 25 percent slopes	0.030	0.084	0.054	0.000	0.000	0.086	0.000	0.000	0.000
Steele City	MT	Dawson	157.883	158.180	0.297	MT021	Attewan-Attewan, thin solum, loams, 4 to 8 percent slopes	0.009	0.000	0.000	0.000	0.000	0.297	0.155	0.000	0.000
Steele City	MT	Dawson	158.180	158.439	0.259	MT021	Lambert-Yetull complex, 15 to 65 percent slopes	0.091	0.233	0.140	0.000	0.000	0.259	0.000	0.000	0.000
Steele City	MT	Dawson	158.439	158.555	0.116	MT021	Chinook fine sandy loam, 4 to 8 percent slopes	0.000	0.000	0.007	0.116	0.000	0.116	0.005	0.000	0.000
Steele City	MT	Dawson	158.555	158.643	0.088	MT021	Lambert gravelly loam, 20 to 40 percent slopes	0.000	0.088	0.084	0.000	0.000	0.088	0.082	0.000	0.000
Steele City	MT	Dawson	158.643	158.814	0.171	MT021	Lonna silt loam, 2 to 4 percent slopes	0.000	0.000	0.171	0.000	0.000	0.171	0.003	0.000	0.000
Steele City	MT	Dawson	158.814	158.942	0.127	MT021	Lambert-Rock outcrop, soft complex, 15 to 70 percent slopes	0.001	0.076	0.073	0.000	0.000	0.127	0.001	0.000	0.000
Steele City	MT	Dawson	158.942	159.103	0.161	MT021	Twilight-Yetull complex, 8 to 25 percent slopes	0.056	0.156	0.100	0.000	0.000	0.161	0.000	0.000	0.000
Steele City	MT	Dawson	159.103	159.122	0.019	MT021	Lambert-Rock outcrop, soft complex, 15 to 70 percent slopes	0.000	0.011	0.011	0.000	0.000	0.019	0.000	0.000	0.000
Steele City	MT	Dawson	159.122	159.176	0.055	MT021	Lonna, Havre, and Glendive soils, 0 to 4 percent slopes, occasionally flooded	0.002	0.000	0.021	0.000	0.003	0.055	0.001	0.000	0.000
Steele City	MT	Dawson	159.176	159.224	0.048	MT021	Lambert-Rock outcrop, soft complex, 15 to 70	0.000	0.029	0.027	0.000	0.000	0.048	0.000	0.000	0.000

Appendix K – Soils by Milepost – Steele City Segment

Pipeline Segment	State	County	Beginning Milepost	Ending Milepost	Miles	Soil Series	Soil Series Name	Wind (miles)	Water (miles)	Low revegetation on Potential (miles)	Prime Farmland (miles)	Hydric Soils (miles)	Compaction on Prone (miles)	Stoney – Rocky (miles)	Shallow Bedrock (miles)	Droghty (miles)
							percent slopes									
Steele City	MT	Dawson	159.224	159.565	0.341	MT021	Twilight-Yetull complex, 2 to 8 percent slopes	0.119	0.000	0.211	0.000	0.000	0.341	0.000	0.000	0.000
Steele City	MT	Dawson	159.565	159.623	0.059	MT021	Lonna, Havre, and Glendive soils, 0 to 4 percent slopes, occasionally flooded	0.002	0.000	0.023	0.000	0.003	0.059	0.001	0.000	0.000
Steele City	MT	Dawson	159.623	160.066	0.443	MT021	Lonna silt loam, 2 to 4 percent slopes	0.000	0.000	0.443	0.000	0.000	0.443	0.009	0.000	0.000
Steele City	MT	Dawson	160.066	160.123	0.057	MT021	Lonna-Cambeth silt loams, 2 to 8 percent slopes	0.000	0.000	0.055	0.000	0.000	0.057	0.001	0.000	0.000
Steele City	MT	Dawson	160.123	160.214	0.091	MT021	Lambert-Dimyaw complex, 15 to 65 percent slopes	0.004	0.091	0.052	0.000	0.000	0.091	0.004	0.000	0.000
Steele City	MT	Dawson	160.214	160.417	0.203	MT021	Lonna-Cambeth silt loams, 2 to 8 percent slopes	0.000	0.000	0.199	0.000	0.000	0.203	0.004	0.000	0.000
Steele City	MT	Dawson	160.417	160.572	0.155	MT021	Lonna-Cambeth-Cabbart silt loams, 4 to 12 percent slopes	0.000	0.147	0.147	0.000	0.000	0.155	0.003	0.000	0.000
Steele City	MT	Dawson	160.572	160.890	0.319	MT021	Lambert-Dimyaw complex, 15 to 65 percent slopes	0.013	0.319	0.182	0.000	0.000	0.319	0.013	0.000	0.000
Steele City	MT	Dawson	160.890	160.977	0.087	MT021	Lambert-Rock outcrop, soft complex, 15 to 70 percent slopes	0.001	0.052	0.049	0.000	0.000	0.087	0.001	0.000	0.000
Steele City	MT	Dawson	160.977	161.006	0.029	MT021	Lonna-Cambeth-Cabbart silt loams, 4 to 12 percent slopes	0.000	0.028	0.028	0.000	0.000	0.029	0.001	0.000	0.000
Steele City	MT	Dawson	161.006	161.041	0.035	MT021	Lambert-Rock outcrop, soft complex, 15 to 70 percent slopes	0.000	0.021	0.020	0.000	0.000	0.035	0.000	0.000	0.000
Steele City	MT	Dawson	161.041	161.177	0.136	MT021	Lonna-Cambeth-Cabbart silt loams, 4 to 12 percent slopes	0.000	0.129	0.129	0.000	0.000	0.136	0.003	0.000	0.000
Steele City	MT	Dawson	161.177	161.267	0.090	MT021	Kremlin loam, 2 to 4 percent slopes	0.000	0.000	0.087	0.090	0.000	0.090	0.005	0.000	0.000
Steele City	MT	Dawson	161.267	161.542	0.275	MT021	Lonna-Cambeth silt loams, 2 to 8 percent slopes	0.000	0.000	0.269	0.000	0.000	0.275	0.005	0.000	0.000
Steele City	MT	Dawson	161.542	161.617	0.076	MT021	Lambert-Dimyaw complex, 15 to 65 percent slopes	0.003	0.076	0.043	0.000	0.000	0.076	0.003	0.000	0.000
Steele City	MT	Dawson	161.617	161.884	0.267	MT021	Lonna-Cambeth silt loams, 2 to 8 percent slopes	0.000	0.000	0.261	0.000	0.000	0.267	0.005	0.000	0.000
Steele City	MT	Dawson	161.884	161.972	0.088	MT021	Lambert gravelly loam, 20 to 40 percent slopes	0.000	0.088	0.084	0.000	0.000	0.088	0.082	0.000	0.000
Steele City	MT	Dawson	161.972	162.261	0.290	MT021	Lonna-Cambeth silt loams, 2 to 8 percent slopes	0.000	0.000	0.284	0.000	0.000	0.290	0.006	0.000	0.000
Steele City	MT	Dawson	162.261	162.293	0.032	MT021	Attewan loam, 4 to 8 percent slopes	0.000	0.000	0.000	0.032	0.000	0.032	0.032	0.000	0.000
Steele City	MT	Dawson	162.293	162.347	0.054	MT021	Lonna-Cambeth silt loams, 2 to 8 percent slopes	0.000	0.000	0.053	0.000	0.000	0.054	0.001	0.000	0.000
Steele City	MT	Dawson	162.347	162.421	0.074	MT021	Lambert gravelly loam, 20 to 40 percent slopes	0.000	0.074	0.071	0.000	0.000	0.074	0.069	0.000	0.000
Steele City	MT	Dawson	162.421	162.581	0.160	MT021	Lonna-Cambeth silt loams, 2 to 8 percent slopes	0.000	0.000	0.157	0.000	0.000	0.160	0.003	0.000	0.000
Steele City	MT	Dawson	162.581	162.679	0.098	MT021	Lambert gravelly loam, 20 to 40 percent slopes	0.000	0.098	0.093	0.000	0.000	0.098	0.091	0.000	0.000
Steele City	MT	Dawson	162.679	163.000	0.321	MT021	Attewan loam, 2 to 4 percent slopes	0.000	0.000	0.000	0.321	0.000	0.321	0.321	0.000	0.000
Steele City	MT	Dawson	163.000	163.015	0.015	MT021	Lambert gravelly loam, 20 to 40 percent slopes	0.000	0.015	0.015	0.000	0.000	0.015	0.014	0.000	0.000
Steele City	MT	Dawson	163.015	163.126	0.111	MT021	Lonna, Havre, and Glendive soils, 0 to 4 percent slopes, occasionally flooded	0.003	0.000	0.043	0.000	0.006	0.111	0.001	0.000	0.000
Steele City	MT	Dawson	163.126	163.451	0.325	MT021	Lonna-Cambeth silt loams, 2 to 8 percent slopes	0.000	0.000	0.318	0.000	0.000	0.325	0.006	0.000	0.000
Steele City	MT	Dawson	163.451	163.591	0.140	MT021	Lonna-Cambeth-Cabbart silt loams, 4 to 12 percent slopes	0.000	0.133	0.133	0.000	0.000	0.140	0.003	0.000	0.000
Steele City	MT	Dawson	163.591	164.163	0.572	MT021	Lonna-Cambeth silt loams, 2 to 8 percent slopes	0.000	0.000	0.561	0.000	0.000	0.572	0.011	0.000	0.000
Steele City	MT	Dawson	164.163	164.297	0.134	MT021	Lonna-Cambeth-Cabbart silt loams, 12 to 25 percent slopes	0.000	0.123	0.126	0.000	0.000	0.134	0.000	0.000	0.000
Steele City	MT	Dawson	164.297	164.390	0.093	MT021	Lonna-Cambeth silt loams, 2 to 8 percent slopes	0.000	0.000	0.091	0.000	0.000	0.093	0.002	0.000	0.000
Steele City	MT	Dawson	164.390	164.452	0.062	MT021	Lonna-Cambeth-Cabbart silt loams, 12 to 25 percent slopes	0.000	0.057	0.058	0.000	0.000	0.062	0.000	0.000	0.000
Steele City	MT	Dawson	164.452	165.102	0.650	MT021	Lonna-Cambeth silt loams, 2 to 8 percent slopes	0.000	0.000	0.637	0.000	0.000	0.650	0.013	0.000	0.000
Steele City	MT	Dawson	165.102	165.179	0.077	MT021	Lonna-Cambeth-Cabbart silt loams, 4 to 12 percent	0.000	0.073	0.073	0.000	0.000	0.077	0.002	0.000	0.000

Appendix K – Soils by Milepost – Steele City Segment

Pipeline Segment	State	County	Beginning Milepost	Ending Milepost	Miles	Soil Series	Soil Series Name	Wind (miles)	Water (miles)	Low revegetation on Potential (miles)	Prime Farmland (miles)	Hydric Soils (miles)	Compaction on Prone (miles)	Stoney – Rocky (miles)	Shallow Bedrock (miles)	Droghty (miles)
							slopes									
Steele City	MT	Dawson	165.179	165.669	0.490	MT021	Lonna-Cambeth silt loams, 2 to 8 percent slopes	0.000	0.000	0.480	0.000	0.000	0.490	0.010	0.000	0.000
Steele City	MT	Dawson	165.669	166.014	0.345	MT021	Subwell-Littlemo loams, 0 to 4 percent slopes	0.000	0.000	0.311	0.000	0.000	0.345	0.328	0.000	0.000
Steele City	MT	Dawson	166.014	166.248	0.234	MT021	Lonna, Havre, and Glendive soils, 0 to 4 percent slopes, occasionally flooded	0.007	0.000	0.091	0.000	0.012	0.234	0.002	0.000	0.000
Steele City	MT	Dawson	166.248	166.275	0.027	MT021	Lonna-Cambeth-Cabbart silt loams, 4 to 12 percent slopes	0.000	0.025	0.025	0.000	0.000	0.027	0.001	0.000	0.000
Steele City	MT	Dawson	166.275	166.324	0.050	MT021	Lonna, Havre, and Glendive soils, 0 to 4 percent slopes, occasionally flooded	0.001	0.000	0.019	0.000	0.002	0.050	0.000	0.000	0.000
Steele City	MT	Dawson	166.324	166.595	0.271	MT021	Lonna-Cambeth-Cabbart silt loams, 4 to 12 percent slopes	0.000	0.258	0.258	0.000	0.000	0.271	0.005	0.000	0.000
Steele City	MT	Dawson	166.595	167.707	1.112	MT021	Lonna-Cambeth silt loams, 2 to 8 percent slopes	0.000	0.000	1.090	0.000	0.000	1.112	0.022	0.000	0.000
Steele City	MT	Dawson	167.707	168.354	0.647	MT021	Lonna silt loam, 2 to 4 percent slopes	0.000	0.000	0.647	0.000	0.000	0.647	0.013	0.000	0.000
Steele City	MT	Dawson	168.354	168.616	0.263	MT021	Subwell-Bigsheep complex, 4 to 15 percent slopes	0.000	0.100	0.184	0.000	0.000	0.263	0.231	0.000	0.000
Steele City	MT	Dawson	168.616	168.698	0.081	MT021	Subwell-Littlemo loams, 0 to 4 percent slopes	0.000	0.000	0.073	0.000	0.000	0.081	0.077	0.000	0.000
Steele City	MT	Dawson	168.698	168.980	0.283	MT021	Lonna silt loam, 2 to 4 percent slopes	0.000	0.000	0.283	0.000	0.000	0.283	0.006	0.000	0.000
Steele City	MT	Dawson	168.980	169.182	0.202	MT021	Lonna-Cambeth silt loams, 2 to 8 percent slopes	0.000	0.000	0.198	0.000	0.000	0.202	0.004	0.000	0.000
Steele City	MT	Dawson	169.182	169.336	0.154	MT021	Kremlin loam, 2 to 4 percent slopes	0.000	0.000	0.148	0.154	0.000	0.154	0.008	0.000	0.000
Steele City	MT	Dawson	169.336	169.702	0.366	MT021	Lonna-Cambeth silt loams, 2 to 8 percent slopes	0.000	0.000	0.358	0.000	0.000	0.366	0.007	0.000	0.000
Steele City	MT	Dawson	169.702	169.744	0.042	MT021	Lonna-Cambeth-Cabbart silt loams, 4 to 12 percent slopes	0.000	0.040	0.040	0.000	0.000	0.042	0.001	0.000	0.000
Steele City	MT	Dawson	169.744	169.784	0.040	MT021	Kremlin loam, 2 to 4 percent slopes	0.000	0.000	0.038	0.040	0.000	0.040	0.002	0.000	0.000
Steele City	MT	Dawson	169.784	169.941	0.157	MT021	Lonna-Cambeth-Cabbart silt loams, 4 to 12 percent slopes	0.000	0.149	0.149	0.000	0.000	0.157	0.003	0.000	0.000
Steele City	MT	Dawson	169.941	171.158	1.217	MT021	Lonna silt loam, 2 to 4 percent slopes	0.000	0.000	1.217	0.000	0.000	1.217	0.024	0.000	0.000
Steele City	MT	Dawson	171.158	171.247	0.089	MT021	Lonna silt loam, 0 to 2 percent slopes	0.000	0.000	0.089	0.000	0.000	0.089	0.000	0.000	0.000
Steele City	MT	Dawson	171.247	172.131	0.885	MT021	Lonna-Cambeth silt loams, 2 to 8 percent slopes	0.000	0.000	0.867	0.000	0.000	0.885	0.018	0.000	0.000
Steele City	MT	Dawson	172.131	172.319	0.187	MT021	Lonna silt loam, 2 to 4 percent slopes	0.000	0.000	0.187	0.000	0.000	0.187	0.004	0.000	0.000
Steele City	MT	Dawson	172.319	172.556	0.238	MT021	Lonna-Cambeth silt loams, 2 to 8 percent slopes	0.000	0.000	0.233	0.000	0.000	0.238	0.005	0.000	0.000
Steele City	MT	Dawson	172.556	172.660	0.104	MT021	Lonna-Cambeth-Cabbart silt loams, 4 to 12 percent slopes	0.000	0.099	0.099	0.000	0.000	0.104	0.002	0.000	0.000
Steele City	MT	Dawson	172.660	174.139	1.479	MT021	Lonna-Cambeth silt loams, 2 to 8 percent slopes	0.000	0.000	1.449	0.000	0.000	1.479	0.030	0.000	0.000
Steele City	MT	Dawson	174.139	174.189	0.051	MT021	Lonna-Cambeth-Cabbart silt loams, 4 to 12 percent slopes	0.000	0.048	0.048	0.000	0.000	0.051	0.001	0.000	0.000
Steele City	MT	Dawson	174.189	174.211	0.021	MT021	Lonna-Cambeth silt loams, 2 to 8 percent slopes	0.000	0.000	0.021	0.000	0.000	0.021	0.000	0.000	0.000
Steele City	MT	Dawson	174.211	174.260	0.050	MT021	Lonna-Cambeth-Cabbart silt loams, 4 to 12 percent slopes	0.000	0.047	0.047	0.000	0.000	0.050	0.001	0.000	0.000
Steele City	MT	Dawson	174.260	174.342	0.082	MT021	Lonna-Cambeth silt loams, 2 to 8 percent slopes	0.000	0.000	0.080	0.000	0.000	0.082	0.002	0.000	0.000
Steele City	MT	Dawson	174.342	174.496	0.154	MT021	Lonna-Cambeth-Cabbart silt loams, 4 to 12 percent slopes	0.000	0.146	0.146	0.000	0.000	0.154	0.003	0.000	0.000
Steele City	MT	Dawson	174.496	174.716	0.220	MT021	Lonna-Cambeth silt loams, 2 to 8 percent slopes	0.000	0.000	0.216	0.000	0.000	0.220	0.004	0.000	0.000
Steele City	MT	Dawson	174.716	175.055	0.339	MT021	Lonna silt loam, 2 to 4 percent slopes	0.000	0.000	0.339	0.000	0.000	0.339	0.007	0.000	0.000
Steele City	MT	Dawson	175.055	175.095	0.039	MT021	Lonna silt loam, 0 to 2 percent slopes	0.000	0.000	0.039	0.000	0.000	0.039	0.000	0.000	0.000
Steele City	MT	Dawson	175.095	175.273	0.179	MT021	Lonna, Havre, and Glendive soils, 0 to 4 percent slopes, occasionally flooded	0.005	0.000	0.070	0.000	0.009	0.179	0.002	0.000	0.000

Appendix K – Soils by Milepost – Steele City Segment

Pipeline Segment	State	County	Beginning Milepost	Ending Milepost	Miles	Soil Series	Soil Series Name	Wind (miles)	Water (miles)	Low revegetation on Potential (miles)	Prime Farmland (miles)	Hydric Soils (miles)	Compaction on Prone (miles)	Stoney – Rocky (miles)	Shallow Bedrock (miles)	Droghty (miles)
Steele City	MT	Dawson	175.273	175.511	0.238	MT021	Lonna silt loam, 0 to 2 percent slopes	0.000	0.000	0.238	0.000	0.000	0.238	0.000	0.000	0.000
Steele City	MT	Dawson	175.511	175.530	0.019	MT021	Lonna silt loam, 2 to 4 percent slopes	0.000	0.000	0.019	0.000	0.000	0.019	0.000	0.000	0.000
Steele City	MT	Dawson	175.530	175.536	0.006	MT021	Lonna, Havre, and Glendive soils, 0 to 4 percent slopes, occasionally flooded	0.000	0.000	0.002	0.000	0.000	0.006	0.000	0.000	0.000
Steele City	MT	Dawson	175.536	175.685	0.149	MT021	Lonna silt loam, 2 to 4 percent slopes	0.000	0.000	0.149	0.000	0.000	0.149	0.003	0.000	0.000
Steele City	MT	Dawson	175.685	176.110	0.425	MT021	Lonna-Cambeth silt loams, 2 to 8 percent slopes	0.000	0.000	0.417	0.000	0.000	0.425	0.009	0.000	0.000
Steele City	MT	Dawson	176.110	176.301	0.191	MT021	Lonna silt loam, 2 to 4 percent slopes	0.000	0.000	0.191	0.000	0.000	0.191	0.004	0.000	0.000
Steele City	MT	Dawson	176.301	176.332	0.030	MT021	Lonna-Cambeth-Cabbart silt loams, 4 to 12 percent slopes	0.000	0.029	0.029	0.000	0.000	0.030	0.001	0.000	0.000
Steele City	MT	Dawson	176.332	176.392	0.061	MT021	Lonna-Cambeth silt loams, 2 to 8 percent slopes	0.000	0.000	0.059	0.000	0.000	0.061	0.001	0.000	0.000
Steele City	MT	Dawson	176.392	176.808	0.416	MT021	Lonna-Cambeth-Cabbart silt loams, 4 to 12 percent slopes	0.000	0.395	0.395	0.000	0.000	0.416	0.008	0.000	0.000
Steele City	MT	Dawson	176.808	177.146	0.339	MT021	Lonna-Cambeth silt loams, 2 to 8 percent slopes	0.000	0.000	0.332	0.000	0.000	0.339	0.007	0.000	0.000
Steele City	MT	Dawson	177.146	177.247	0.101	MT021	Lambert-Rock outcrop, soft complex, 15 to 70 percent slopes	0.001	0.061	0.058	0.000	0.000	0.101	0.001	0.000	0.000
Steele City	MT	Dawson	177.247	177.457	0.209	MT021	Lonna silt loam, 0 to 2 percent slopes	0.000	0.000	0.209	0.000	0.000	0.209	0.000	0.000	0.000
Steele City	MT	Dawson	177.457	177.510	0.054	MT021	Lonna silt loam, 2 to 4 percent slopes	0.000	0.000	0.054	0.000	0.000	0.054	0.001	0.000	0.000
Steele City	MT	Dawson	177.510	177.804	0.294	MT021	Lonna silt loam, 0 to 2 percent slopes	0.000	0.000	0.294	0.000	0.000	0.294	0.000	0.000	0.000
Steele City	MT	Dawson	177.804	177.971	0.167	MT021	Lonna silt loam, 2 to 4 percent slopes	0.000	0.000	0.167	0.000	0.000	0.167	0.003	0.000	0.000
Steele City	MT	Dawson	177.971	178.054	0.083	MT021	Lonna-Cambeth-Cabbart silt loams, 4 to 12 percent slopes	0.000	0.079	0.079	0.000	0.000	0.083	0.002	0.000	0.000
Steele City	MT	Dawson	178.054	178.328	0.274	MT021	Lonna silt loam, 2 to 4 percent slopes	0.000	0.000	0.274	0.000	0.000	0.274	0.005	0.000	0.000
Steele City	MT	Dawson	178.328	178.837	0.509	MT021	Lonna-Cambeth silt loams, 2 to 8 percent slopes	0.000	0.000	0.499	0.000	0.000	0.509	0.010	0.000	0.000
Steele City	MT	Dawson	178.837	178.871	0.034	MT021	Lonna-Cambeth-Cabbart silt loams, 4 to 12 percent slopes	0.000	0.032	0.032	0.000	0.000	0.034	0.001	0.000	0.000
Steele City	MT	Dawson	178.871	178.942	0.071	MT021	Lambert gravelly loam, 20 to 40 percent slopes	0.000	0.071	0.068	0.000	0.000	0.071	0.066	0.000	0.000
Steele City	MT	Dawson	178.942	178.970	0.028	MT021	Lonna-Cambeth-Cabbart silt loams, 4 to 12 percent slopes	0.000	0.026	0.026	0.000	0.000	0.028	0.001	0.000	0.000
Steele City	MT	Dawson	178.970	179.554	0.584	MT021	Lambert gravelly loam, 20 to 40 percent slopes	0.000	0.584	0.554	0.000	0.000	0.584	0.543	0.000	0.000
Steele City	MT	Dawson	179.554	179.912	0.358	MT021	Lonna silt loam, 2 to 4 percent slopes	0.000	0.000	0.358	0.000	0.000	0.358	0.007	0.000	0.000
Steele City	MT	Dawson	179.912	180.003	0.091	MT021	Lonna-Cambeth silt loams, 2 to 8 percent slopes	0.000	0.000	0.089	0.000	0.000	0.091	0.002	0.000	0.000
Steele City	MT	Dawson	180.003	180.211	0.208	MT021	Lonna silt loam, 2 to 4 percent slopes	0.000	0.000	0.208	0.000	0.000	0.208	0.004	0.000	0.000
Steele City	MT	Dawson	180.211	180.506	0.295	MT021	Lonna-Cambeth-Cabbart silt loams, 4 to 12 percent slopes	0.000	0.280	0.280	0.000	0.000	0.295	0.006	0.000	0.000
Steele City	MT	Dawson	180.506	180.853	0.346	MT021	Lambert gravelly loam, 20 to 40 percent slopes	0.000	0.346	0.329	0.000	0.000	0.346	0.322	0.000	0.000
Steele City	MT	Dawson	180.853	181.971	1.119	MT021	Tinsley-Lambert complex, 15 to 65 percent slopes	0.056	1.007	0.336	0.000	0.000	1.119	1.007	0.000	0.000
Steele City	MT	Dawson	181.971	182.090	0.119	MT021	Kremlin loam, 4 to 8 percent slopes	0.000	0.005	0.116	0.119	0.000	0.119	0.002	0.000	0.000
Steele City	MT	Dawson	182.090	182.127	0.037	MT021	Kremlin-Eapa loams, 0 to 4 percent slopes	0.000	0.000	0.028	0.037	0.000	0.037	0.011	0.000	0.000
Steele City	MT	Dawson	182.127	182.257	0.129	MT021	Kremlin loam, 4 to 8 percent slopes	0.000	0.005	0.127	0.129	0.000	0.129	0.003	0.000	0.000
Steele City	MT	Dawson	182.257	183.521	1.265	MT021	Kremlin-Eapa loams, 0 to 4 percent slopes	0.000	0.000	0.949	1.265	0.000	1.265	0.379	0.000	0.000
Steele City	MT	Dawson	183.521	183.621	0.099	MT021	Attewan-Attewan, thin solum, loams, 4 to 8 percent slopes	0.003	0.000	0.000	0.000	0.000	0.099	0.052	0.000	0.000
Steele City	MT	Dawson	183.621	183.649	0.028	MT021	Kremlin-Eapa loams, 0 to 4 percent slopes	0.000	0.000	0.021	0.028	0.000	0.028	0.008	0.000	0.000
Steele City	MT	Dawson	183.649	183.788	0.139	MT021	Attewan-Attewan, thin solum, loams, 4 to 8 percent slopes	0.004	0.000	0.000	0.000	0.000	0.139	0.072	0.000	0.000

Appendix K – Soils by Milepost – Steele City Segment

Pipeline Segment	State	County	Beginning Milepost	Ending Milepost	Miles	Soil Series	Soil Series Name	Wind (miles)	Water (miles)	Low revegetation on Potential (miles)	Prime Farmland (miles)	Hydric Soils (miles)	Compaction on Prone (miles)	Stoney – Rocky (miles)	Shallow Bedrock (miles)	Droghty (miles)
Steele City	MT	Dawson	183.788	183.911	0.123	MT021	Kremlin-Eapa loams, 0 to 4 percent slopes	0.000	0.000	0.092	0.123	0.000	0.123	0.037	0.000	0.000
Steele City	MT	Dawson	183.911	183.982	0.071	MT021	Attewan-Attewan, thin solum, loams, 4 to 8 percent slopes	0.002	0.000	0.000	0.000	0.000	0.071	0.037	0.000	0.000
Steele City	MT	Dawson	183.982	184.420	0.438	MT021	Kremlin-Eapa loams, 0 to 4 percent slopes	0.000	0.000	0.328	0.438	0.000	0.438	0.131	0.000	0.000
Steele City	MT	Dawson	184.420	184.554	0.134	MT021	Attewan loam, 2 to 4 percent slopes	0.000	0.000	0.000	0.134	0.000	0.134	0.134	0.000	0.000
Steele City	MT	Dawson	184.554	185.018	0.464	MT021	Attewan, thin solum complex, 4 to 15 percent slopes	0.000	0.037	0.037	0.000	0.000	0.464	0.427	0.000	0.000
Steele City	MT	Dawson	185.018	185.477	0.459	MT021	Subwell-Bigsheep complex, 4 to 15 percent slopes	0.000	0.174	0.321	0.000	0.000	0.459	0.404	0.000	0.000
Steele City	MT	Dawson	185.477	185.620	0.144	MT021	Subwell-Littlemo loams, 0 to 4 percent slopes	0.000	0.000	0.129	0.000	0.000	0.144	0.137	0.000	0.000
Steele City	MT	Dawson	185.620	185.743	0.123	MT021	Subwell-Bigsheep complex, 4 to 15 percent slopes	0.000	0.047	0.086	0.000	0.000	0.123	0.108	0.000	0.000
Steele City	MT	Dawson	185.743	185.920	0.177	MT021	Subwell-Littlemo loams, 0 to 4 percent slopes	0.000	0.000	0.159	0.000	0.000	0.177	0.168	0.000	0.000
Steele City	MT	Dawson	185.920	186.168	0.249	MT021	Kremlin loam, 4 to 8 percent slopes	0.000	0.010	0.244	0.249	0.000	0.249	0.005	0.000	0.000
Steele City	MT	Dawson	186.168	186.968	0.800	MT021	Subwell-Littlemo loams, 0 to 4 percent slopes	0.000	0.000	0.720	0.000	0.000	0.800	0.760	0.000	0.000
Steele City	MT	Dawson	186.968	187.131	0.163	MT021	Attewan loam, 2 to 4 percent slopes	0.000	0.000	0.000	0.163	0.000	0.163	0.163	0.000	0.000
Steele City	MT	Dawson	187.131	187.189	0.058	MT021	Subwell-Littlemo loams, 0 to 4 percent slopes	0.000	0.000	0.052	0.000	0.000	0.058	0.055	0.000	0.000
Steele City	MT	Dawson	187.189	187.256	0.066	MT021	Tinsley-Lambert complex, 15 to 65 percent slopes	0.003	0.060	0.020	0.000	0.000	0.066	0.060	0.000	0.000
Steele City	MT	Dawson	187.256	187.625	0.369	MT021	Attewan loam, 2 to 4 percent slopes	0.000	0.000	0.000	0.369	0.000	0.369	0.369	0.000	0.000
Steele City	MT	Dawson	187.625	187.735	0.110	MT021	Tinsley-Lambert complex, 15 to 65 percent slopes	0.006	0.099	0.033	0.000	0.000	0.110	0.099	0.000	0.000
Steele City	MT	Dawson	187.735	187.779	0.044	MT021	Attewan-Attewan, thin solum, loams, 4 to 8 percent slopes	0.001	0.000	0.000	0.000	0.000	0.044	0.023	0.000	0.000
Steele City	MT	Dawson	187.779	187.985	0.206	MT021	Attewan-Attewan, thin solum, loams, 2 to 4 percent slopes	0.000	0.000	0.006	0.000	0.000	0.206	0.200	0.000	0.000
Steele City	MT	Dawson	187.985	188.113	0.128	MT021	Lonna, Havre, and Glendive soils, 0 to 4 percent slopes, occasionally flooded	0.004	0.000	0.050	0.000	0.006	0.128	0.001	0.000	0.000
Steele City	MT	Dawson	188.113	188.180	0.068	MT021	Attewan-Attewan, thin solum, loams, 2 to 4 percent slopes	0.000	0.000	0.002	0.000	0.000	0.068	0.065	0.000	0.000
Steele City	MT	Dawson	188.180	188.255	0.074	MT021	Kremlin loam, 4 to 8 percent slopes	0.000	0.003	0.073	0.074	0.000	0.074	0.001	0.000	0.000
Steele City	MT	Dawson	188.255	188.364	0.109	MT021	Attewan-Attewan, thin solum, loams, 2 to 4 percent slopes	0.000	0.000	0.003	0.000	0.000	0.109	0.106	0.000	0.000
Steele City	MT	Dawson	188.364	188.430	0.066	MT021	Attewan-Attewan, thin solum, loams, 4 to 8 percent slopes	0.002	0.000	0.000	0.000	0.000	0.066	0.035	0.000	0.000
Steele City	MT	Dawson	188.430	188.758	0.329	MT021	Kremlin-Eapa loams, 0 to 4 percent slopes	0.000	0.000	0.246	0.329	0.000	0.329	0.099	0.000	0.000
Steele City	MT	Dawson	188.758	189.080	0.322	MT021	Attewan loam, 2 to 4 percent slopes	0.000	0.000	0.000	0.322	0.000	0.322	0.322	0.000	0.000
Steele City	MT	Dawson	189.080	189.098	0.018	MT021	Attewan-Attewan, thin solum, loams, 2 to 4 percent slopes	0.000	0.000	0.001	0.000	0.000	0.018	0.017	0.000	0.000
Steele City	MT	Dawson	189.098	189.208	0.110	MT021	Attewan-Attewan, thin solum, loams, 4 to 8 percent slopes	0.003	0.000	0.000	0.000	0.000	0.110	0.057	0.000	0.000
Steele City	MT	Dawson	189.208	189.321	0.113	MT021	Kremlin-Eapa loams, 0 to 4 percent slopes	0.000	0.000	0.085	0.113	0.000	0.113	0.034	0.000	0.000
Steele City	MT	Dawson	189.321	189.376	0.054	MT021	Attewan-Attewan, thin solum, loams, 4 to 8 percent slopes	0.002	0.000	0.000	0.000	0.000	0.054	0.028	0.000	0.000
Steele City	MT	Dawson	189.376	189.526	0.150	MT021	Kremlin-Eapa loams, 0 to 4 percent slopes	0.000	0.000	0.113	0.150	0.000	0.150	0.045	0.000	0.000
Steele City	MT	Dawson	189.526	189.704	0.179	MT021	Attewan-Attewan, thin solum, loams, 4 to 8 percent slopes	0.005	0.000	0.000	0.000	0.000	0.179	0.093	0.000	0.000
Steele City	MT	Dawson	189.704	189.747	0.043	MT021	Attewan-Attewan, thin solum, loams, 2 to 4 percent slopes	0.000	0.000	0.001	0.000	0.000	0.043	0.042	0.000	0.000
Steele City	MT	Dawson	189.747	189.829	0.081	MT021	Attewan-Attewan, thin solum, loams, 4 to 8 percent	0.002	0.000	0.000	0.000	0.000	0.081	0.042	0.000	0.000

Appendix K – Soils by Milepost – Steele City Segment

Pipeline Segment	State	County	Beginning Milepost	Ending Milepost	Miles	Soil Series	Soil Series Name	Wind (miles)	Water (miles)	Low revegetation on Potential (miles)	Prime Farmland (miles)	Hydric Soils (miles)	Compaction on Prone (miles)	Stoney – Rocky (miles)	Shallow Bedrock (miles)	Droghty (miles)
							slopes									
Steele City	MT	Dawson	189.829	189.859	0.031	MT021	Attewan-Attewan, thin solum, loams, 2 to 4 percent slopes	0.000	0.000	0.001	0.000	0.000	0.031	0.030	0.000	0.000
Steele City	MT	Dawson	189.859	190.218	0.359	MT021	Attewan loam, 2 to 4 percent slopes	0.000	0.000	0.000	0.359	0.000	0.359	0.359	0.000	0.000
Steele City	MT	Dawson	190.218	190.777	0.559	MT021	Chinook fine sandy loam, 0 to 4 percent slopes	0.000	0.000	0.028	0.559	0.000	0.559	0.028	0.000	0.000
Steele City	MT	Dawson	190.777	191.322	0.545	MT021	Kremlin loam, 4 to 8 percent slopes	0.000	0.022	0.534	0.545	0.000	0.545	0.011	0.000	0.000
Steele City	MT	Dawson	191.322	191.953	0.632	MT021	Attewan loam, 2 to 4 percent slopes	0.000	0.000	0.000	0.632	0.000	0.632	0.632	0.000	0.000
Steele City	MT	Dawson	191.953	192.566	0.612	MT021	Tinsley-Lambert complex, 15 to 65 percent slopes	0.031	0.551	0.184	0.000	0.000	0.612	0.551	0.000	0.000
Steele City	MT	Dawson	192.566	192.681	0.116	MT021	Lambert-Yetull complex, 15 to 65 percent slopes	0.040	0.104	0.062	0.000	0.000	0.116	0.000	0.000	0.000
Steele City	MT	Dawson	192.681	192.759	0.078	MT021	Twilight-Yetull complex, 8 to 25 percent slopes	0.027	0.075	0.048	0.000	0.000	0.078	0.000	0.000	0.000
Steele City	MT	Dawson	192.759	192.764	0.005	MT021	Lambert-Yetull complex, 15 to 65 percent slopes	0.002	0.005	0.003	0.000	0.000	0.005	0.000	0.000	0.000
Steele City	MT	Dawson	192.764	192.813	0.049	MT021	Twilight-Yetull complex, 8 to 25 percent slopes	0.017	0.047	0.030	0.000	0.000	0.049	0.000	0.000	0.000
Steele City	MT	Dawson	192.813	192.860	0.047	MT021	Lambert-Yetull complex, 15 to 65 percent slopes	0.016	0.042	0.025	0.000	0.000	0.047	0.000	0.000	0.000
Steele City	MT	Dawson	192.860	193.072	0.212	MT021	Twilight-Yetull complex, 8 to 25 percent slopes	0.074	0.205	0.131	0.000	0.000	0.212	0.000	0.000	0.000
Steele City	MT	Dawson	193.072	193.121	0.049	MT021	Lambert-Yetull complex, 15 to 65 percent slopes	0.017	0.044	0.027	0.000	0.000	0.049	0.000	0.000	0.000
Steele City	MT	Dawson	193.121	193.488	0.367	MT021	Twilight-Yetull complex, 2 to 8 percent slopes	0.129	0.000	0.228	0.000	0.000	0.367	0.000	0.000	0.000
Steele City	MT	Dawson	193.488	193.574	0.085	MT021	Tinsley-Lambert complex, 15 to 65 percent slopes	0.004	0.077	0.026	0.000	0.000	0.085	0.077	0.000	0.000
Steele City	MT	Dawson	193.574	193.579	0.005	MT021	Glendive loam, 0 to 2 percent slopes, occasionally flooded	0.000	0.000	0.000	0.005	0.000	0.005	0.000	0.000	0.000
Steele City	MT	Dawson	193.579	194.169	0.590	MT021	Cherry silty clay loam, noncalcareous, 0 to 2 percent slopes	0.000	0.000	0.549	0.000	0.000	0.590	0.000	0.000	0.000
Steele City	MT	Dawson	194.169	194.177	0.008	MT021	Glendive loam, 0 to 2 percent slopes, occasionally flooded	0.000	0.000	0.000	0.008	0.000	0.008	0.000	0.000	0.000
Steele City	MT	Dawson	194.177	194.467	0.290	MT021	Glendive fine sandy loam, 0 to 2 percent slopes, occasionally flooded	0.012	0.000	0.020	0.290	0.000	0.290	0.000	0.000	0.000
Steele City	MT	Dawson	194.467	194.568	0.102	MT021	Lambert gravelly loam, 20 to 40 percent slopes	0.000	0.102	0.097	0.000	0.000	0.102	0.095	0.000	0.000
Steele City	MT	Dawson	194.568	194.666	0.098	MT021	Terrace escarpments	0.000	0.098	0.000	0.000	0.000	0.098	0.098	0.000	0.000
Steele City	MT	Dawson	194.666	194.902	0.236	MT021	Saline land	0.000	0.000	0.236	0.000	0.236	0.236	0.000	0.000	0.000
Steele City	MT	Dawson	194.902	194.927	0.026	MT021	Havre silt loam, 0 to 2 percent slopes	0.000	0.000	0.001	0.026	0.000	0.026	0.000	0.000	0.000
Steele City	MT	Dawson	194.927	195.217	0.289	MT021	Glendive loam, 0 to 2 percent slopes, occasionally flooded	0.000	0.000	0.012	0.289	0.000	0.289	0.000	0.000	0.000
Steele City	MT	Dawson	195.217	195.558	0.341	MT021	Havre silt loam, 0 to 2 percent slopes	0.000	0.000	0.014	0.341	0.000	0.341	0.000	0.000	0.000
Steele City	MT	Dawson	195.558	195.597	0.040	MT021	Hanly soils, 0 to 4 percent slopes, occasionally flooded	0.012	0.000	0.012	0.000	0.000	0.040	0.000	0.000	0.000
Steele City	MT	Dawson	195.597	195.635	0.038	MT021	Glendive loam, 0 to 2 percent slopes, occasionally flooded	0.000	0.000	0.002	0.038	0.000	0.038	0.000	0.000	0.000
Steele City	MT	Dawson	195.635	195.825	0.189	MT021	Hanly soils, 0 to 4 percent slopes, occasionally flooded	0.057	0.000	0.057	0.000	0.000	0.189	0.000	0.000	0.000
Steele City	MT	Dawson	195.825	195.851	0.027	MT021	Riverwash	0.001	0.000	0.001	0.000	0.000	0.027	0.000	0.000	0.000
Steele City	MT	Dawson	195.851	195.967	0.116	MT021	Water	0.000	0.000	0.000	0.000	0.000	0.116	0.000	0.000	0.000
Steele City	MT	Dawson	195.967	196.130	0.163	MT021	Lambert-Dimyaw complex, 15 to 65 percent slopes	0.007	0.163	0.093	0.000	0.000	0.163	0.007	0.000	0.000
Steele City	MT	Dawson	196.130	196.205	0.075	MT021	Lonna silt loam, 0 to 2 percent slopes	0.000	0.000	0.075	0.000	0.000	0.075	0.000	0.000	0.000
Steele City	MT	Dawson	196.205	196.271	0.066	MT021	Lonna silt loam, 2 to 8 percent slopes	0.000	0.004	0.066	0.000	0.000	0.066	0.000	0.000	0.000
Steele City	MT	Dawson	196.271	196.392	0.121	MT021	Lambert-Dimyaw complex, 15 to 65 percent slopes	0.005	0.121	0.069	0.000	0.000	0.121	0.005	0.000	0.000
Steele City	MT	Dawson	196.392	196.694	0.302	MT021	Lambert-Rock outcrop, soft complex, 15 to 70	0.003	0.181	0.172	0.000	0.000	0.302	0.003	0.000	0.000

Appendix K – Soils by Milepost – Steele City Segment

Pipeline Segment	State	County	Beginning Milepost	Ending Milepost	Miles	Soil Series	Soil Series Name	Wind (miles)	Water (miles)	Low revegetation on Potential (miles)	Prime Farmland (miles)	Hydric Soils (miles)	Compaction on Prone (miles)	Stoney – Rocky (miles)	Shallow Bedrock (miles)	Droghty (miles)
							percent slopes									
Steele City	MT	Dawson	196.694	196.924	0.231	MT021	Tinsley-Lambert complex, 15 to 65 percent slopes	0.012	0.208	0.069	0.000	0.000	0.231	0.208	0.000	0.000
Steele City	MT	Prairie	196.924	196.954	0.030	MT079	Lihen-Tinsley complex, 8 to 35 percent slopes	0.015	0.027	0.005	0.000	0.000	0.030	0.014	0.000	0.000
Steele City	MT	Prairie	196.954	196.997	0.043	MT079	Lihen loamy sand, 4 to 15 percent slopes	0.036	0.000	0.000	0.000	0.000	0.043	0.002	0.000	0.000
Steele City	MT	Prairie	196.997	197.062	0.065	MT079	Lihen-Yetull complex, 8 to 35 percent slopes	0.055	0.059	0.016	0.000	0.000	0.065	0.020	0.000	0.000
Steele City	MT	Prairie	197.062	197.289	0.227	MT079	Lihen loamy sand, 4 to 15 percent slopes	0.193	0.000	0.000	0.000	0.000	0.227	0.011	0.000	0.000
Steele City	MT	Prairie	197.289	197.451	0.162	MT079	Lihen-Yetull complex, 8 to 35 percent slopes	0.138	0.146	0.040	0.000	0.000	0.162	0.049	0.000	0.000
Steele City	MT	Prairie	197.451	197.546	0.095	MT079	Degrand loam, 0 to 4 percent slopes	0.000	0.000	0.005	0.095	0.000	0.095	0.081	0.000	0.000
Steele City	MT	Prairie	197.546	197.563	0.017	MT079	Lihen-Yetull complex, 8 to 35 percent slopes	0.014	0.015	0.004	0.000	0.000	0.017	0.005	0.000	0.000
Steele City	MT	Prairie	197.563	197.805	0.242	MT079	Degrand loam, 0 to 4 percent slopes	0.000	0.000	0.012	0.242	0.000	0.242	0.206	0.000	0.000
Steele City	MT	Prairie	197.805	197.960	0.156	MT079	Lihen-Parshall-Yetull complex, 4 to 15 percent slopes	0.086	0.000	0.023	0.000	0.000	0.156	0.039	0.000	0.000
Steele City	MT	Prairie	197.960	198.049	0.088	MT079	Lihen-Yetull complex, 8 to 35 percent slopes	0.075	0.079	0.022	0.000	0.000	0.088	0.026	0.000	0.000
Steele City	MT	Prairie	198.049	198.162	0.114	MT079	Lihen-Parshall-Yetull complex, 4 to 15 percent slopes	0.063	0.000	0.017	0.000	0.000	0.114	0.028	0.000	0.000
Steele City	MT	Prairie	198.162	198.229	0.067	MT079	Degrand loam, 0 to 4 percent slopes	0.000	0.000	0.003	0.067	0.000	0.067	0.057	0.000	0.000
Steele City	MT	Prairie	198.229	198.268	0.039	MT079	Lihen-Yetull complex, 8 to 35 percent slopes	0.033	0.035	0.010	0.000	0.000	0.039	0.012	0.000	0.000
Steele City	MT	Prairie	198.268	199.385	1.117	MT079	Degrand loam, 0 to 4 percent slopes	0.000	0.000	0.056	1.117	0.000	1.117	0.949	0.000	0.000
Steele City	MT	Prairie	199.385	199.521	0.136	MT079	Lihen loamy sand, 4 to 15 percent slopes	0.115	0.000	0.000	0.000	0.000	0.136	0.007	0.000	0.000
Steele City	MT	Prairie	199.521	199.685	0.164	MT079	Lihen-Tinsley complex, 8 to 35 percent slopes	0.082	0.148	0.025	0.000	0.000	0.164	0.074	0.000	0.000
Steele City	MT	Prairie	199.685	199.723	0.038	MT079	Busby-Twilight-Blackhall fine sandy loams, 4 to 15 percent slopes	0.002	0.019	0.029	0.000	0.000	0.038	0.000	0.000	0.000
Steele City	MT	Prairie	199.723	199.759	0.036	MT079	Lonna-Cambeth silt loams, 2 to 8 percent slopes	0.000	0.000	0.035	0.000	0.000	0.036	0.001	0.000	0.000
Steele City	MT	Prairie	199.759	199.819	0.060	MT079	Busby-Twilight-Blackhall fine sandy loams, 4 to 15 percent slopes	0.003	0.030	0.045	0.000	0.000	0.060	0.000	0.000	0.000
Steele City	MT	Prairie	199.819	199.855	0.036	MT079	Lonna-Cambeth silt loams, 2 to 8 percent slopes	0.000	0.000	0.035	0.000	0.000	0.036	0.001	0.000	0.000
Steele City	MT	Prairie	199.855	199.877	0.022	MT079	Busby-Twilight-Blackhall fine sandy loams, 4 to 15 percent slopes	0.001	0.011	0.017	0.000	0.000	0.022	0.000	0.000	0.000
Steele City	MT	Prairie	199.877	200.466	0.589	MT079	Lonna-Cambeth silt loams, 2 to 8 percent slopes	0.000	0.000	0.577	0.000	0.000	0.589	0.012	0.000	0.000
Steele City	MT	Prairie	200.466	200.499	0.033	MT079	Lihen loamy sand, 4 to 15 percent slopes	0.028	0.000	0.000	0.000	0.000	0.033	0.002	0.000	0.000
Steele City	MT	Prairie	200.499	200.838	0.339	MT079	Lonna-Cambeth silt loams, 2 to 8 percent slopes	0.000	0.000	0.332	0.000	0.000	0.339	0.007	0.000	0.000
Steele City	MT	Prairie	200.838	200.863	0.025	MT079	Yawdim-Cambeth, calcareous, complex, 2 to 8 percent slopes	0.000	0.002	0.011	0.000	0.000	0.025	0.000	0.000	0.000
Steele City	MT	Prairie	200.863	200.994	0.131	MT079	Lonna-Cambeth silt loams, 2 to 8 percent slopes	0.000	0.000	0.129	0.000	0.000	0.131	0.003	0.000	0.000
Steele City	MT	Prairie	200.994	201.167	0.173	MT079	Lihen-Parshall-Yetull complex, 4 to 15 percent slopes	0.095	0.000	0.026	0.000	0.000	0.173	0.043	0.000	0.000
Steele City	MT	Prairie	201.167	201.252	0.085	MT079	Lonna-Cambeth silt loams, 2 to 8 percent slopes	0.000	0.000	0.083	0.000	0.000	0.085	0.002	0.000	0.000
Steele City	MT	Prairie	201.252	201.320	0.069	MT079	Kremlin loam, 0 to 2 percent slopes	0.000	0.000	0.066	0.069	0.000	0.069	0.002	0.000	0.000
Steele City	MT	Prairie	201.320	201.394	0.074	MT079	Glendive fine sandy loam, 0 to 2 percent slopes	0.003	0.000	0.008	0.074	0.000	0.074	0.002	0.000	0.000
Steele City	MT	Prairie	201.394	201.631	0.237	MT079	Busby fine sandy loam, 0 to 2 percent slopes	0.000	0.000	0.237	0.237	0.000	0.237	0.000	0.000	0.000
Steele City	MT	Prairie	201.631	201.821	0.189	MT079	Busby fine sandy loam, 2 to 8 percent slopes	0.009	0.000	0.019	0.189	0.000	0.189	0.000	0.000	0.000
Steele City	MT	Prairie	201.821	201.867	0.046	MT079	Busby fine sandy loam, 0 to 2 percent slopes	0.000	0.000	0.046	0.046	0.000	0.046	0.000	0.000	0.000
Steele City	MT	Prairie	201.867	202.219	0.352	MT079	Glendive fine sandy loam, 0 to 2 percent slopes	0.014	0.000	0.039	0.352	0.000	0.352	0.011	0.000	0.000
Steele City	MT	Prairie	202.219	202.286	0.067	MT079	Yamac loam, 0 to 2 percent slopes	0.000	0.000	0.007	0.067	0.000	0.067	0.000	0.000	0.000
Steele City	MT	Prairie	202.286	202.446	0.161	MT079	Lonna silt loam, 2 to 8 percent slopes	0.000	0.010	0.161	0.000	0.000	0.161	0.000	0.000	0.000

Appendix K – Soils by Milepost – Steele City Segment

Pipeline Segment	State	County	Beginning Milepost	Ending Milepost	Miles	Soil Series	Soil Series Name	Wind (miles)	Water (miles)	Low revegetation on Potential (miles)	Prime Farmland (miles)	Hydric Soils (miles)	Compaction on Prone (miles)	Stoney – Rocky (miles)	Shallow Bedrock (miles)	Droghty (miles)
Steele City	MT	Prairie	202.446	202.473	0.027	MT079	Floweree silt loam, calcareous, 0 to 2 percent slopes	0.000	0.000	0.004	0.027	0.000	0.027	0.000	0.000	0.000
Steele City	MT	Prairie	202.473	202.600	0.127	MT079	Lonna silt loam, 2 to 8 percent slopes	0.000	0.008	0.127	0.000	0.000	0.127	0.000	0.000	0.000
Steele City	MT	Prairie	202.600	202.745	0.145	MT079	Floweree silt loam, calcareous, 0 to 2 percent slopes	0.000	0.000	0.022	0.145	0.000	0.145	0.000	0.000	0.000
Steele City	MT	Prairie	202.745	203.116	0.371	MT079	Yamac loam, 0 to 2 percent slopes	0.000	0.000	0.037	0.371	0.000	0.371	0.000	0.000	0.000
Steele City	MT	Prairie	203.116	203.696	0.580	MT079	Lonna silt loam, 2 to 8 percent slopes	0.000	0.035	0.580	0.000	0.000	0.580	0.000	0.000	0.000
Steele City	MT	Prairie	203.696	203.989	0.293	MT079	Busby-Twilight-Blackhall fine sandy loams, 4 to 15 percent slopes	0.015	0.147	0.220	0.000	0.000	0.293	0.000	0.000	0.000
Steele City	MT	Prairie	203.989	204.151	0.162	MT079	Lonna-Cambeth-Cabbart silt loams, 4 to 12 percent slopes	0.000	0.154	0.154	0.000	0.000	0.162	0.003	0.000	0.000
Steele City	MT	Prairie	204.151	204.190	0.039	MT079	Chinook-Kremlin complex, 2 to 6 percent slopes	0.000	0.000	0.018	0.039	0.000	0.039	0.000	0.000	0.000
Steele City	MT	Prairie	204.190	204.601	0.410	MT079	Lonna silt loam, 2 to 8 percent slopes	0.000	0.025	0.410	0.000	0.000	0.410	0.000	0.000	0.000
Steele City	MT	Prairie	204.601	204.718	0.118	MT079	Delpoint-Busby-Blackhall complex, 4 to 15 percent slopes	0.006	0.082	0.053	0.000	0.000	0.118	0.000	0.000	0.000
Steele City	MT	Prairie	204.718	204.988	0.270	MT079	Degrand loam, 0 to 4 percent slopes	0.000	0.000	0.013	0.270	0.000	0.270	0.229	0.000	0.000
Steele City	MT	Prairie	204.988	205.104	0.116	MT079	Chinook-Twilight-Blackhall fine sandy loams, 8 to 15 percent slopes	0.000	0.009	0.034	0.000	0.000	0.116	0.000	0.000	0.000
Steele City	MT	Prairie	205.104	205.218	0.114	MT079	Kremlin loam, 2 to 8 percent slopes	0.000	0.000	0.011	0.114	0.000	0.114	0.000	0.000	0.000
Steele City	MT	Prairie	205.218	205.265	0.048	MT079	Lonna silt loam, 0 to 2 percent slopes	0.000	0.000	0.048	0.000	0.000	0.048	0.000	0.000	0.000
Steele City	MT	Prairie	205.265	205.476	0.211	MT079	Lonna-Cambeth silt loams, 2 to 8 percent slopes	0.000	0.000	0.206	0.000	0.000	0.211	0.004	0.000	0.000
Steele City	MT	Prairie	205.476	205.501	0.025	MT079	Parshall fine sandy loam, 2 to 6 percent slopes	0.001	0.000	0.001	0.025	0.000	0.025	0.002	0.000	0.000
Steele City	MT	Prairie	205.501	205.603	0.103	MT079	Lonna-Cambeth silt loams, 2 to 8 percent slopes	0.000	0.000	0.101	0.000	0.000	0.103	0.002	0.000	0.000
Steele City	MT	Prairie	205.603	205.840	0.236	MT079	Lonna silt loam, 0 to 2 percent slopes	0.000	0.000	0.236	0.000	0.000	0.236	0.000	0.000	0.000
Steele City	MT	Prairie	205.840	205.901	0.062	MT079	Lonna-Cambeth silt loams, 2 to 8 percent slopes	0.000	0.000	0.061	0.000	0.000	0.062	0.001	0.000	0.000
Steele City	MT	Prairie	205.901	206.123	0.221	MT079	Lonna-Cambeth-Cabbart silt loams, 4 to 12 percent slopes	0.000	0.210	0.210	0.000	0.000	0.221	0.004	0.000	0.000
Steele City	MT	Prairie	206.123	206.175	0.053	MT079	Lonna silt loam, 2 to 8 percent slopes	0.000	0.003	0.053	0.000	0.000	0.053	0.000	0.000	0.000
Steele City	MT	Prairie	206.175	206.439	0.264	MT079	Lonna-Cambeth-Cabbart silt loams, 4 to 12 percent slopes	0.000	0.251	0.251	0.000	0.000	0.264	0.005	0.000	0.000
Steele City	MT	Prairie	206.439	206.507	0.068	MT079	Lonna silt loam, 2 to 8 percent slopes	0.000	0.004	0.068	0.000	0.000	0.068	0.000	0.000	0.000
Steele City	MT	Prairie	206.507	206.577	0.070	MT079	Lonna-Cambeth-Cabbart silt loams, 4 to 12 percent slopes	0.000	0.067	0.067	0.000	0.000	0.070	0.001	0.000	0.000
Steele City	MT	Prairie	206.577	206.733	0.156	MT079	Lonna-Cambeth-Cabbart silt loams, 12 to 25 percent slopes	0.000	0.143	0.146	0.000	0.000	0.156	0.000	0.000	0.005
Steele City	MT	Prairie	206.733	206.857	0.124	MT079	Cambeth, calcareous-Cabbart-Yawdim complex, 4 to 25 percent slopes	0.000	0.121	0.096	0.000	0.000	0.124	0.000	0.000	0.000
Steele City	MT	Prairie	206.857	207.311	0.453	MT079	Lonna-Cambeth-Cabbart silt loams, 12 to 25 percent slopes	0.000	0.417	0.426	0.000	0.000	0.453	0.000	0.000	0.014
Steele City	MT	Prairie	207.311	207.592	0.281	MT079	Lonna-Cambeth-Cabbart silt loams, 4 to 12 percent slopes	0.000	0.267	0.267	0.000	0.000	0.281	0.006	0.000	0.006
Steele City	MT	Prairie	207.592	207.659	0.067	MT079	Lonna silt loam, 2 to 8 percent slopes	0.000	0.004	0.067	0.000	0.000	0.067	0.000	0.000	0.001
Steele City	MT	Prairie	207.659	207.832	0.174	MT079	Lonna-Cambeth-Cabbart silt loams, 4 to 12 percent slopes	0.000	0.165	0.165	0.000	0.000	0.174	0.003	0.000	0.003
Steele City	MT	Prairie	207.832	207.844	0.012	MT079	Ustic Torriorthents-Ustic Torrifluvents-Rock outcrop complex, 0 to 35 percent slopes	0.000	0.001	0.001	0.000	0.000	0.012	0.000	0.000	0.000
Steele City	MT	Prairie	207.844	207.946	0.102	MT079	Ismay silty clay loam, 0 to 2 percent slopes	0.000	0.000	0.102	0.000	0.003	0.102	0.000	0.000	0.000

Appendix K – Soils by Milepost – Steele City Segment

Pipeline Segment	State	County	Beginning Milepost	Ending Milepost	Miles	Soil Series	Soil Series Name	Wind (miles)	Water (miles)	Low revegetation on Potential (miles)	Prime Farmland (miles)	Hydric Soils (miles)	Compaction on Prone (miles)	Stoney – Rocky (miles)	Shallow Bedrock (miles)	Droghty (miles)
Steele City	MT	Prairie	207.946	208.071	0.124	MT079	Lonna-Cambeth-Cabbart silt loams, 12 to 25 percent slopes	0.000	0.114	0.117	0.000	0.000	0.124	0.000	0.000	0.004
Steele City	MT	Prairie	208.071	208.290	0.219	MT079	Chinook-Twilight-Blackhall fine sandy loams, 8 to 15 percent slopes	0.000	0.018	0.064	0.000	0.000	0.219	0.000	0.000	0.000
Steele City	MT	Prairie	208.290	208.449	0.160	MT079	Chinook-Twilight fine sandy loams, 2 to 8 percent slopes	0.000	0.006	0.073	0.160	0.000	0.160	0.006	0.000	0.000
Steele City	MT	Prairie	208.449	208.526	0.077	MT079	Lonna silt loam, 2 to 8 percent slopes	0.000	0.005	0.077	0.000	0.000	0.077	0.000	0.000	0.002
Steele City	MT	Prairie	208.526	208.581	0.055	MT079	Chinook-Twilight-Blackhall fine sandy loams, 8 to 15 percent slopes	0.000	0.004	0.016	0.000	0.000	0.055	0.000	0.000	0.000
Steele City	MT	Prairie	208.581	208.812	0.231	MT079	Lonna silt loam, 2 to 8 percent slopes	0.000	0.014	0.231	0.000	0.000	0.231	0.000	0.000	0.005
Steele City	MT	Prairie	208.812	208.835	0.023	MT079	Ismay silty clay loam, 0 to 2 percent slopes	0.000	0.000	0.023	0.000	0.001	0.023	0.000	0.000	0.000
Steele City	MT	Prairie	208.835	208.888	0.054	MT079	Lonna silt loam, 2 to 8 percent slopes	0.000	0.003	0.054	0.000	0.000	0.054	0.000	0.000	0.001
Steele City	MT	Prairie	208.888	208.982	0.093	MT079	Ismay silty clay loam, 0 to 2 percent slopes	0.000	0.000	0.093	0.000	0.003	0.093	0.000	0.000	0.000
Steele City	MT	Prairie	208.982	209.101	0.120	MT079	Lonna-Cambeth-Cabbart silt loams, 12 to 25 percent slopes	0.000	0.110	0.112	0.000	0.000	0.120	0.000	0.000	0.004
Steele City	MT	Prairie	209.101	209.209	0.108	MT079	Cambeth, calcareous-Cabbart-Yawdim complex, 4 to 25 percent slopes	0.000	0.105	0.083	0.000	0.000	0.108	0.000	0.000	0.000
Steele City	MT	Prairie	209.209	209.465	0.256	MT079	Lonna-Cambeth-Cabbart silt loams, 12 to 25 percent slopes	0.000	0.235	0.241	0.000	0.000	0.256	0.000	0.000	0.008
Steele City	MT	Prairie	209.465	209.804	0.339	MT079	Cambeth, calcareous-Cabbart-Yawdim complex, 4 to 25 percent slopes	0.000	0.329	0.261	0.000	0.000	0.339	0.000	0.000	0.000
Steele City	MT	Prairie	209.804	210.092	0.287	MT079	Cambeth, calcareous-Cabbart-Kirby complex, 8 to 45 percent slopes	0.000	0.253	0.215	0.000	0.000	0.287	0.066	0.000	0.000
Steele City	MT	Prairie	210.092	210.388	0.296	MT079	Lonna-Cambeth-Cabbart silt loams, 4 to 12 percent slopes	0.000	0.281	0.281	0.000	0.000	0.296	0.006	0.000	0.006
Steele City	MT	Prairie	210.388	210.780	0.393	MT079	Cambeth, calcareous-Cabbart-Kirby complex, 8 to 45 percent slopes	0.000	0.346	0.295	0.000	0.000	0.393	0.090	0.000	0.000
Steele City	MT	Prairie	210.780	210.837	0.057	MT079	Lonna-Cambeth-Cabbart silt loams, 12 to 25 percent slopes	0.000	0.052	0.053	0.000	0.000	0.057	0.000	0.000	0.002
Steele City	MT	Prairie	210.837	210.971	0.134	MT079	Cambeth, calcareous-Cabbart-Kirby complex, 8 to 45 percent slopes	0.000	0.118	0.101	0.000	0.000	0.134	0.031	0.000	0.000
Steele City	MT	Prairie	210.971	211.047	0.076	MT079	Lonna-Cambeth-Cabbart silt loams, 4 to 12 percent slopes	0.000	0.073	0.073	0.000	0.000	0.076	0.002	0.000	0.002
Steele City	MT	Prairie	211.047	211.130	0.083	MT079	Cambeth, calcareous-Cabbart-Kirby complex, 8 to 45 percent slopes	0.000	0.073	0.062	0.000	0.000	0.083	0.019	0.000	0.000
Steele City	MT	Prairie	211.130	211.182	0.051	MT079	Lonna-Cambeth-Cabbart silt loams, 4 to 12 percent slopes	0.000	0.049	0.049	0.000	0.000	0.051	0.001	0.000	0.001
Steele City	MT	Prairie	211.182	211.257	0.076	MT079	Cambeth, calcareous-Cabbart-Kirby complex, 8 to 45 percent slopes	0.000	0.067	0.057	0.000	0.000	0.076	0.017	0.000	0.000
Steele City	MT	Prairie	211.257	211.757	0.500	MT079	Lonna-Cambeth-Cabbart silt loams, 12 to 25 percent slopes	0.000	0.460	0.470	0.000	0.000	0.500	0.000	0.000	0.015
Steele City	MT	Prairie	211.757	211.969	0.212	MT079	Lonna-Cambeth-Cabbart silt loams, 4 to 12 percent slopes	0.000	0.201	0.201	0.000	0.000	0.212	0.004	0.000	0.004
Steele City	MT	Prairie	211.969	212.177	0.208	MT079	Lonna-Cambeth-Cabbart silt loams, 12 to 25 percent slopes	0.000	0.192	0.196	0.000	0.000	0.208	0.000	0.000	0.006
Steele City	MT	Prairie	212.177	212.232	0.055	MT079	Lonna-Cambeth-Cabbart silt loams, 4 to 12 percent	0.000	0.052	0.052	0.000	0.000	0.055	0.001	0.000	0.001

Appendix K – Soils by Milepost – Steele City Segment

Pipeline Segment	State	County	Beginning Milepost	Ending Milepost	Miles	Soil Series	Soil Series Name	Wind (miles)	Water (miles)	Low revegetation on Potential (miles)	Prime Farmland (miles)	Hydric Soils (miles)	Compaction on Prone (miles)	Stoney – Rocky (miles)	Shallow Bedrock (miles)	Droghty (miles)
							slopes									
Steele City	MT	Prairie	212.232	212.360	0.128	MT079	Lonna-Cambeth-Cabbart silt loams, 12 to 25 percent slopes	0.000	0.117	0.120	0.000	0.000	0.128	0.000	0.000	0.004
Steele City	MT	Prairie	212.360	212.962	0.603	MT079	Lonna-Cambeth-Cabbart silt loams, 4 to 12 percent slopes	0.000	0.573	0.573	0.000	0.000	0.603	0.012	0.000	0.012
Steele City	MT	Prairie	212.962	213.157	0.195	MT079	Cambeth, calcareous-Cabbart-Kirby complex, 8 to 45 percent slopes	0.000	0.172	0.146	0.000	0.000	0.195	0.045	0.000	0.000
Steele City	MT	Prairie	213.157	213.614	0.457	MT079	Lonna-Cambeth-Cabbart silt loams, 4 to 12 percent slopes	0.000	0.434	0.434	0.000	0.000	0.457	0.009	0.000	0.009
Steele City	MT	Prairie	213.614	213.875	0.261	MT079	Lonna-Cambeth-Cabbart silt loams, 12 to 25 percent slopes	0.000	0.240	0.245	0.000	0.000	0.261	0.000	0.000	0.008
Steele City	MT	Prairie	213.875	214.003	0.128	MT079	Lonna-Cambeth-Cabbart silt loams, 4 to 12 percent slopes	0.000	0.122	0.122	0.000	0.000	0.128	0.003	0.000	0.003
Steele City	MT	Prairie	214.003	214.250	0.247	MT079	Lonna-Cambeth-Cabbart silt loams, 12 to 25 percent slopes	0.000	0.227	0.232	0.000	0.000	0.247	0.000	0.000	0.007
Steele City	MT	Prairie	214.250	214.325	0.075	MT079	Cambeth, calcareous-Cabbart-Kirby complex, 8 to 45 percent slopes	0.000	0.066	0.056	0.000	0.000	0.075	0.017	0.000	0.000
Steele City	MT	Prairie	214.325	214.599	0.274	MT079	Lonna-Cambeth-Cabbart silt loams, 12 to 25 percent slopes	0.000	0.252	0.257	0.000	0.000	0.274	0.000	0.000	0.008
Steele City	MT	Prairie	214.599	214.904	0.306	MT079	Cambeth, calcareous-Cabbart-Kirby complex, 8 to 45 percent slopes	0.000	0.269	0.229	0.000	0.000	0.306	0.070	0.000	0.000
Steele City	MT	Prairie	214.904	215.081	0.176	MT079	Lonna-Cambeth silt loams, 2 to 8 percent slopes	0.000	0.000	0.173	0.000	0.000	0.176	0.004	0.000	0.004
Steele City	MT	Prairie	215.081	215.241	0.160	MT079	Lonna-Cambeth-Cabbart silt loams, 12 to 25 percent slopes	0.000	0.147	0.150	0.000	0.000	0.160	0.000	0.000	0.005
Steele City	MT	Prairie	215.241	215.310	0.069	MT079	Lonna-Cambeth-Cabbart silt loams, 4 to 12 percent slopes	0.000	0.066	0.066	0.000	0.000	0.069	0.001	0.000	0.001
Steele City	MT	Prairie	215.310	215.686	0.377	MT079	Lonna-Cambeth-Cabbart silt loams, 12 to 25 percent slopes	0.000	0.347	0.354	0.000	0.000	0.377	0.000	0.000	0.011
Steele City	MT	Prairie	215.686	215.750	0.063	MT079	Lonna-Cambeth-Cabbart silt loams, 4 to 12 percent slopes	0.000	0.060	0.060	0.000	0.000	0.063	0.001	0.000	0.001
Steele City	MT	Prairie	215.750	215.800	0.050	MT079	Lonna silt loam, 2 to 8 percent slopes	0.000	0.003	0.050	0.000	0.000	0.050	0.000	0.000	0.001
Steele City	MT	Prairie	215.800	216.020	0.220	MT079	Lonna-Cambeth-Cabbart silt loams, 12 to 25 percent slopes	0.000	0.202	0.207	0.000	0.000	0.220	0.000	0.000	0.007
Steele City	MT	Prairie	216.020	216.131	0.111	MT079	Lonna-Cambeth-Cabbart silt loams, 4 to 12 percent slopes	0.000	0.106	0.106	0.000	0.000	0.111	0.002	0.000	0.002
Steele City	MT	Prairie	216.131	216.162	0.031	MT079	Lonna-Cambeth-Cabbart silt loams, 12 to 25 percent slopes	0.000	0.028	0.029	0.000	0.000	0.031	0.000	0.000	0.001
Steele City	MT	Prairie	216.162	216.182	0.020	MT079	Lonna-Cambeth-Cabbart silt loams, 4 to 12 percent slopes	0.000	0.019	0.019	0.000	0.000	0.020	0.000	0.000	0.000
Steele City	MT	Prairie	216.182	216.372	0.190	MT079	Lonna-Cambeth-Cabbart silt loams, 12 to 25 percent slopes	0.000	0.175	0.179	0.000	0.000	0.190	0.000	0.000	0.006
Steele City	MT	Prairie	216.372	216.862	0.490	MT079	Lonna-Cambeth-Cabbart silt loams, 4 to 12 percent slopes	0.000	0.466	0.466	0.000	0.000	0.490	0.010	0.000	0.010
Steele City	MT	Prairie	216.862	217.063	0.201	MT079	Lonna-Cambeth-Cabbart silt loams, 12 to 25 percent slopes	0.000	0.185	0.189	0.000	0.000	0.201	0.000	0.000	0.006
Steele City	MT	Prairie	217.063	217.133	0.070	MT079	Lonna silt loam, 2 to 8 percent slopes	0.000	0.004	0.070	0.000	0.000	0.070	0.000	0.000	0.001

Appendix K – Soils by Milepost – Steele City Segment

Pipeline Segment	State	County	Beginning Milepost	Ending Milepost	Miles	Soil Series	Soil Series Name	Wind (miles)	Water (miles)	Low revegetation on Potential (miles)	Prime Farmland (miles)	Hydric Soils (miles)	Compaction on Prone (miles)	Stoney – Rocky (miles)	Shallow Bedrock (miles)	Droghty (miles)
Steele City	MT	Prairie	217.133	217.401	0.268	MT079	Lonna-Cambeth-Cabbart silt loams, 12 to 25 percent slopes	0.000	0.247	0.252	0.000	0.000	0.268	0.000	0.000	0.008
Steele City	MT	Prairie	217.401	217.597	0.197	MT079	Cambeth, calcareous-Cabbart-Lonna silt loams, 15 to 35 percent slopes	0.000	0.187	0.177	0.000	0.000	0.197	0.000	0.000	0.020
Steele City	MT	Prairie	217.597	217.673	0.076	MT079	Cabbart-Rock outcrop-Yawdim complex, 15 to 70 percent slopes	0.000	0.053	0.038	0.000	0.000	0.076	0.000	0.000	0.002
Steele City	MT	Prairie	217.673	217.908	0.235	MT079	Lonna-Cambeth-Cabbart silt loams, 4 to 12 percent slopes	0.000	0.223	0.223	0.000	0.000	0.235	0.005	0.000	0.005
Steele City	MT	Fallon	217.908	218.082	0.174	MT025	Lonna-Cambeth-Cabbart silt loams, 4 to 12 percent slopes	0.000	0.167	0.169	0.000	0.000	0.174	0.000	0.000	0.000
Steele City	MT	Fallon	218.082	218.169	0.087	MT025	Cabbart-Rock outcrop-Delpoint complex, 15 to 50 percent slopes	0.000	0.066	0.064	0.000	0.001	0.087	0.000	0.000	0.000
Steele City	MT	Fallon	218.169	218.209	0.040	MT025	Lonna-Cambeth-Cabbart silt loams, 4 to 12 percent slopes	0.000	0.039	0.039	0.000	0.000	0.040	0.000	0.000	0.000
Steele City	MT	Fallon	218.209	218.361	0.152	MT025	Cabbart-Rock outcrop-Delpoint complex, 15 to 50 percent slopes	0.000	0.115	0.112	0.000	0.002	0.152	0.000	0.000	0.000
Steele City	MT	Fallon	218.361	218.409	0.048	MT025	Lonna-Cambeth-Cabbart silt loams, 4 to 12 percent slopes	0.000	0.046	0.046	0.000	0.000	0.048	0.000	0.000	0.000
Steele City	MT	Fallon	218.409	218.971	0.562	MT025	Lonna-Cabbart silt loams, 2 to 8 percent slopes	0.000	0.000	0.534	0.000	0.000	0.562	0.000	0.000	0.000
Steele City	MT	Fallon	218.971	219.650	0.680	MT025	Kremlin loam, 2 to 8 percent slopes	0.000	0.020	0.061	0.680	0.000	0.680	0.041	0.000	0.020
Steele City	MT	Fallon	219.650	219.720	0.070	MT025	Lonna-Cabbart silt loams, 8 to 25 percent slopes	0.000	0.064	0.067	0.000	0.000	0.070	0.000	0.000	0.000
Steele City	MT	Fallon	219.720	219.806	0.086	MT025	Cabbart-Rock outcrop-Delpoint complex, 15 to 50 percent slopes	0.000	0.065	0.064	0.000	0.001	0.086	0.000	0.000	0.000
Steele City	MT	Fallon	219.806	219.986	0.180	MT025	Lonna-Cabbart silt loams, 8 to 25 percent slopes	0.000	0.164	0.171	0.000	0.000	0.180	0.000	0.000	0.000
Steele City	MT	Fallon	219.986	220.429	0.442	MT025	Cabbart-Rock outcrop-Delpoint complex, 15 to 50 percent slopes	0.000	0.336	0.327	0.000	0.004	0.442	0.000	0.000	0.000
Steele City	MT	Fallon	220.429	220.610	0.181	MT025	Yamacall loam, 8 to 15 percent slopes	0.000	0.174	0.177	0.000	0.000	0.181	0.000	0.000	0.000
Steele City	MT	Fallon	220.610	221.159	0.550	MT025	Yamacall-Cabbart loams, 15 to 35 percent slopes	0.000	0.511	0.517	0.000	0.005	0.550	0.000	0.000	0.000
Steele City	MT	Fallon	221.159	221.428	0.269	MT025	Lonna-Cabbart silt loams, 8 to 25 percent slopes	0.000	0.245	0.256	0.000	0.000	0.269	0.000	0.000	0.000
Steele City	MT	Fallon	221.428	221.624	0.195	MT025	Cambeth-Cabbart silt loams, 2 to 8 percent slopes	0.000	0.004	0.189	0.000	0.000	0.195	0.000	0.000	0.000
Steele City	MT	Fallon	221.624	221.737	0.113	MT025	Delpoint-Cabbart complex, 8 to 15 percent slopes	0.000	0.110	0.107	0.000	0.000	0.113	0.000	0.000	0.000
Steele City	MT	Fallon	221.737	221.823	0.086	MT025	Cambeth-Cabbart silt loams, 2 to 8 percent slopes	0.000	0.002	0.083	0.000	0.000	0.086	0.000	0.000	0.000
Steele City	MT	Fallon	221.823	221.938	0.116	MT025	Lonna silt loam, 2 to 8 percent slopes	0.000	0.000	0.112	0.116	0.000	0.116	0.000	0.000	0.000
Steele City	MT	Fallon	221.938	222.052	0.113	MT025	Lonna-Cambeth silt loams, 2 to 8 percent slopes	0.000	0.003	0.113	0.113	0.000	0.113	0.000	0.000	0.000
Steele City	MT	Fallon	222.052	222.107	0.055	MT025	Lonna-Cabbart silt loams, 8 to 25 percent slopes	0.000	0.050	0.053	0.000	0.000	0.055	0.000	0.000	0.000
Steele City	MT	Fallon	222.107	222.173	0.066	MT025	Lonna-Cambeth silt loams, 2 to 8 percent slopes	0.000	0.002	0.066	0.066	0.000	0.066	0.000	0.000	0.000
Steele City	MT	Fallon	222.173	222.206	0.033	MT025	Lonna-Cabbart silt loams, 8 to 25 percent slopes	0.000	0.030	0.032	0.000	0.000	0.033	0.000	0.000	0.000
Steele City	MT	Fallon	222.206	222.292	0.086	MT025	Lonna-Cambeth silt loams, 2 to 8 percent slopes	0.000	0.003	0.086	0.086	0.000	0.086	0.000	0.000	0.000
Steele City	MT	Fallon	222.292	222.910	0.618	MT025	Lonna-Cabbart silt loams, 8 to 25 percent slopes	0.000	0.563	0.587	0.000	0.000	0.618	0.000	0.000	0.000
Steele City	MT	Fallon	222.910	223.083	0.173	MT025	Lonna silt loam, 2 to 8 percent slopes	0.000	0.000	0.168	0.173	0.000	0.173	0.000	0.000	0.000
Steele City	MT	Fallon	223.083	223.244	0.161	MT025	Cabbart-Cambeth silt loams, 8 to 15 percent slopes	0.000	0.149	0.149	0.000	0.000	0.161	0.000	0.000	0.000
Steele City	MT	Fallon	223.244	223.288	0.044	MT025	Lonna-Cabbart silt loams, 8 to 25 percent slopes	0.000	0.040	0.042	0.000	0.000	0.044	0.000	0.000	0.000
Steele City	MT	Fallon	223.288	223.332	0.044	MT025	Cabbart-Cambeth silt loams, 8 to 15 percent slopes	0.000	0.041	0.041	0.000	0.000	0.044	0.000	0.000	0.000
Steele City	MT	Fallon	223.332	223.418	0.086	MT025	Lonna-Cabbart silt loams, 8 to 25 percent slopes	0.000	0.078	0.081	0.000	0.000	0.086	0.000	0.000	0.000
Steele City	MT	Fallon	223.418	223.498	0.080	MT025	Lonna-Cambeth-Cabbart silt loams, 4 to 12 percent	0.000	0.077	0.078	0.000	0.000	0.080	0.000	0.000	0.000

Appendix K – Soils by Milepost – Steele City Segment

Pipeline Segment	State	County	Beginning Milepost	Ending Milepost	Miles	Soil Series	Soil Series Name	Wind (miles)	Water (miles)	Low revegetation on Potential (miles)	Prime Farmland (miles)	Hydric Soils (miles)	Compaction on Prone (miles)	Stoney – Rocky (miles)	Shallow Bedrock (miles)	Droghty (miles)
							slopes									
Steele City	MT	Fallon	223.498	223.823	0.325	MT025	Cabbart-Cambeth silt loams, 8 to 15 percent slopes	0.000	0.302	0.302	0.000	0.000	0.325	0.000	0.000	0.000
Steele City	MT	Fallon	223.823	223.914	0.091	MT025	Blacksheep-Twilight fine sandy loams, 8 to 15 percent slopes	0.000	0.006	0.046	0.000	0.000	0.091	0.000	0.000	0.000
Steele City	MT	Fallon	223.914	224.007	0.093	MT025	Delpoint-Cabbart complex, 8 to 15 percent slopes	0.000	0.091	0.088	0.000	0.000	0.093	0.000	0.000	0.000
Steele City	MT	Fallon	224.007	224.131	0.124	MT025	Yamacall loam, 8 to 15 percent slopes	0.000	0.119	0.121	0.000	0.000	0.124	0.000	0.000	0.000
Steele City	MT	Fallon	224.131	224.324	0.193	MT025	Cabbart-Rock outcrop-Delpoint complex, 15 to 50 percent slopes	0.000	0.147	0.143	0.000	0.002	0.193	0.000	0.000	0.000
Steele City	MT	Fallon	224.324	224.561	0.238	MT025	Cabbart-Cambeth silt loams, 8 to 15 percent slopes	0.000	0.221	0.221	0.000	0.000	0.238	0.000	0.000	0.000
Steele City	MT	Fallon	224.561	224.621	0.060	MT025	Orinoco-Yawdim silty clay loams, 4 to 15 percent slopes	0.000	0.058	0.037	0.000	0.000	0.060	0.000	0.000	0.000
Steele City	MT	Fallon	224.621	224.631	0.010	MT025	Cabbart-Cambeth silt loams, 8 to 15 percent slopes	0.000	0.009	0.009	0.000	0.000	0.010	0.000	0.000	0.000
Steele City	MT	Fallon	224.631	224.705	0.074	MT025	Floweree silt loam, 2 to 8 percent slopes	0.000	0.000	0.074	0.074	0.000	0.074	0.000	0.000	0.000
Steele City	MT	Fallon	224.705	224.723	0.018	MT025	Orinoco-Yawdim silty clay loams, 4 to 15 percent slopes	0.000	0.018	0.011	0.000	0.000	0.018	0.000	0.000	0.000
Steele City	MT	Fallon	224.723	224.902	0.179	MT025	Yamacall-Cabbart loams, 15 to 35 percent slopes	0.000	0.167	0.169	0.000	0.002	0.179	0.000	0.000	0.000
Steele City	MT	Fallon	224.902	224.969	0.067	MT025	Kremlin loam, 2 to 8 percent slopes	0.000	0.002	0.006	0.067	0.000	0.067	0.004	0.000	0.002
Steele City	MT	Fallon	224.969	225.036	0.067	MT025	Yamacall-Cabbart loams, 15 to 35 percent slopes	0.000	0.062	0.063	0.000	0.001	0.067	0.000	0.000	0.000
Steele City	MT	Fallon	225.036	225.523	0.487	MT025	Kremlin-Cabbart complex, 2 to 8 percent slopes	0.000	0.000	0.462	0.000	0.000	0.487	0.000	0.000	0.000
Steele City	MT	Fallon	225.523	225.715	0.192	MT025	Yamacall-Cabbart loams, 15 to 35 percent slopes	0.000	0.179	0.181	0.000	0.002	0.192	0.000	0.000	0.000
Steele City	MT	Fallon	225.715	225.817	0.102	MT025	Yamacall loam, 2 to 8 percent slopes	0.000	0.000	0.096	0.000	0.000	0.102	0.000	0.000	0.000
Steele City	MT	Fallon	225.817	225.939	0.122	MT025	Kremlin loam, 2 to 8 percent slopes	0.000	0.004	0.011	0.122	0.000	0.122	0.007	0.000	0.004
Steele City	MT	Fallon	225.939	225.997	0.058	MT025	Delpoint-Cabbart complex, 8 to 15 percent slopes	0.000	0.056	0.055	0.000	0.000	0.058	0.000	0.000	0.000
Steele City	MT	Fallon	225.997	226.047	0.050	MT025	Kremlin loam, 2 to 8 percent slopes	0.000	0.001	0.004	0.050	0.000	0.050	0.003	0.000	0.001
Steele City	MT	Fallon	226.047	226.108	0.061	MT025	Lonna silt loam, 0 to 2 percent slopes	0.000	0.000	0.060	0.061	0.000	0.061	0.000	0.000	0.000
Steele City	MT	Fallon	226.108	226.205	0.097	MT025	Delpoint loam, 2 to 8 percent slopes	0.000	0.006	0.091	0.000	0.000	0.097	0.000	0.000	0.000
Steele City	MT	Fallon	226.205	226.443	0.238	MT025	Lonna silt loam, 2 to 8 percent slopes	0.000	0.000	0.231	0.238	0.000	0.238	0.000	0.000	0.000
Steele City	MT	Fallon	226.443	226.602	0.159	MT025	Lonna silt loam, 0 to 2 percent slopes	0.000	0.000	0.156	0.159	0.000	0.159	0.000	0.000	0.000
Steele City	MT	Fallon	226.602	226.779	0.177	MT025	Havre loam, 0 to 2 percent slopes	0.000	0.000	0.021	0.177	0.005	0.177	0.000	0.000	0.000
Steele City	MT	Fallon	226.779	227.049	0.270	MT025	Lonna silt loam, 0 to 2 percent slopes	0.000	0.000	0.264	0.270	0.000	0.270	0.000	0.000	0.000
Steele City	MT	Fallon	227.049	227.582	0.533	MT025	Lonna-Cambeth silt loams, 2 to 8 percent slopes	0.000	0.016	0.533	0.533	0.000	0.533	0.000	0.000	0.000
Steele City	MT	Fallon	227.582	227.702	0.120	MT025	Cabbart-Cambeth silt loams, 8 to 15 percent slopes	0.000	0.112	0.112	0.000	0.000	0.120	0.000	0.000	0.000
Steele City	MT	Fallon	227.702	227.738	0.036	MT025	Cabbart-Rock outcrop-Delpoint complex, 15 to 50 percent slopes	0.000	0.027	0.027	0.000	0.000	0.036	0.000	0.000	0.000
Steele City	MT	Fallon	227.738	227.766	0.028	MT025	Cabbart-Cambeth silt loams, 8 to 15 percent slopes	0.000	0.026	0.026	0.000	0.000	0.028	0.000	0.000	0.000
Steele City	MT	Fallon	227.766	227.804	0.038	MT025	Lonna-Cambeth silt loams, 2 to 8 percent slopes	0.000	0.001	0.038	0.038	0.000	0.038	0.000	0.000	0.000
Steele City	MT	Fallon	227.804	227.842	0.038	MT025	Cabbart-Cambeth silt loams, 8 to 15 percent slopes	0.000	0.035	0.035	0.000	0.000	0.038	0.000	0.000	0.000
Steele City	MT	Fallon	227.842	228.000	0.158	MT025	Lonna-Cambeth silt loams, 2 to 8 percent slopes	0.000	0.005	0.158	0.158	0.000	0.158	0.000	0.000	0.000
Steele City	MT	Fallon	228.000	228.070	0.071	MT025	Cabbart-Cambeth silt loams, 8 to 15 percent slopes	0.000	0.066	0.066	0.000	0.000	0.071	0.000	0.000	0.000
Steele City	MT	Fallon	228.070	228.298	0.228	MT025	Lonna-Cambeth silt loams, 2 to 8 percent slopes	0.000	0.007	0.228	0.228	0.000	0.228	0.000	0.000	0.000
Steele City	MT	Fallon	228.298	228.350	0.052	MT025	Kirby-Cabbart complex, 8 to 25 percent slopes	0.000	0.049	0.020	0.000	0.000	0.052	0.027	0.000	0.000
Steele City	MT	Fallon	228.350	228.636	0.285	MT025	Lonna silt loam, 2 to 8 percent slopes	0.000	0.000	0.277	0.285	0.000	0.285	0.000	0.000	0.000
Steele City	MT	Fallon	228.636	228.681	0.046	MT025	Cabbart-Cambeth silt loams, 8 to 15 percent slopes	0.000	0.043	0.043	0.000	0.000	0.046	0.000	0.000	0.000
Steele City	MT	Fallon	228.681	228.701	0.019	MT025	Alona silt loam, 2 to 8 percent slopes	0.000	0.000	0.019	0.000	0.000	0.019	0.000	0.000	0.000
Steele City	MT	Fallon	228.701	229.265	0.565	MT025	Blacksheep-Twilight fine sandy loams, 8 to 15	0.000	0.040	0.288	0.000	0.000	0.565	0.000	0.000	0.000

Appendix K – Soils by Milepost – Steele City Segment

Pipeline Segment	State	County	Beginning Milepost	Ending Milepost	Miles	Soil Series	Soil Series Name	Wind (miles)	Water (miles)	Low revegetation on Potential (miles)	Prime Farmland (miles)	Hydric Soils (miles)	Compaction on Prone (miles)	Stoney – Rocky (miles)	Shallow Bedrock (miles)	Droghty (miles)
							percent slopes									
Steele City	MT	Fallon	229.265	229.392	0.127	MT025	Kirby-Cabbart complex, 8 to 25 percent slopes	0.000	0.120	0.049	0.000	0.000	0.127	0.067	0.000	0.000
Steele City	MT	Fallon	229.392	229.504	0.112	MT025	Lonna silt loam, 2 to 8 percent slopes	0.000	0.000	0.108	0.112	0.000	0.112	0.000	0.000	0.000
Steele City	MT	Fallon	229.504	229.719	0.216	MT025	Lonna-Cambeth-Cabbart silt loams, 4 to 12 percent slopes	0.000	0.207	0.209	0.000	0.000	0.216	0.000	0.000	0.000
Steele City	MT	Fallon	229.719	229.920	0.201	MT025	Delpoint-Cabbart complex, 8 to 15 percent slopes	0.000	0.195	0.189	0.000	0.000	0.201	0.000	0.000	0.000
Steele City	MT	Fallon	229.920	229.974	0.054	MT025	Lonna silt loam, 2 to 8 percent slopes	0.000	0.000	0.053	0.054	0.000	0.054	0.000	0.000	0.000
Steele City	MT	Fallon	229.974	230.159	0.185	MT025	Delpoint-Cabbart complex, 8 to 15 percent slopes	0.000	0.179	0.174	0.000	0.000	0.185	0.000	0.000	0.000
Steele City	MT	Fallon	230.159	230.239	0.080	MT025	Kobase silty clay loam, 2 to 8 percent slopes	0.000	0.000	0.075	0.080	0.000	0.080	0.000	0.000	0.000
Steele City	MT	Fallon	230.239	230.297	0.058	MT025	Cabbart silt loam, 4 to 15 percent slopes	0.000	0.053	0.055	0.000	0.000	0.058	0.000	0.000	0.000
Steele City	MT	Fallon	230.297	230.366	0.069	MT025	Gerdrum clay loam, 2 to 8 percent slopes	0.000	0.000	0.067	0.000	0.000	0.069	0.000	0.000	0.000
Steele City	MT	Fallon	230.366	230.664	0.298	MT025	Cabbart-Rock outcrop-Delpoint complex, 15 to 50 percent slopes	0.000	0.226	0.220	0.000	0.003	0.298	0.000	0.000	0.000
Steele City	MT	Fallon	230.664	230.741	0.076	MT025	Yamacall loam, 2 to 8 percent slopes	0.000	0.000	0.072	0.000	0.000	0.076	0.000	0.000	0.000
Steele City	MT	Fallon	230.741	231.158	0.418	MT025	Cabbart-Rock outcrop-Delpoint complex, 15 to 50 percent slopes	0.000	0.318	0.309	0.000	0.004	0.418	0.000	0.000	0.000
Steele City	MT	Fallon	231.158	231.398	0.240	MT025	Delpoint-Cabbart complex, 8 to 15 percent slopes	0.000	0.233	0.225	0.000	0.000	0.240	0.000	0.000	0.000
Steele City	MT	Fallon	231.398	231.563	0.165	MT025	Blacksheep-Twilight fine sandy loams, 8 to 15 percent slopes	0.000	0.012	0.084	0.000	0.000	0.165	0.000	0.000	0.000
Steele City	MT	Fallon	231.563	231.739	0.176	MT025	Kremlin loam, 2 to 8 percent slopes	0.000	0.005	0.016	0.176	0.000	0.176	0.011	0.000	0.005
Steele City	MT	Fallon	231.739	231.771	0.032	MT025	Lonna silt loam, 2 to 8 percent slopes	0.000	0.000	0.031	0.032	0.000	0.032	0.000	0.000	0.000
Steele City	MT	Fallon	231.771	231.795	0.024	MT025	Water	0.000	0.000	0.000	0.000	0.000	0.024	0.000	0.000	0.000
Steele City	MT	Fallon	231.795	231.836	0.041	MT025	Lonna silt loam, 2 to 8 percent slopes	0.000	0.000	0.040	0.041	0.000	0.041	0.000	0.000	0.000
Steele City	MT	Fallon	231.836	232.474	0.638	MT025	Eapa loam, 2 to 8 percent slopes	0.000	0.019	0.089	0.638	0.000	0.638	0.000	0.000	0.000
Steele City	MT	Fallon	232.474	232.484	0.011	MT025	Havre-Harlake complex, 0 to 2 percent slopes	0.000	0.000	0.001	0.011	0.000	0.011	0.000	0.000	0.000
Steele City	MT	Fallon	232.484	232.631	0.146	MT025	Archin loam, 2 to 8 percent slopes	0.000	0.000	0.138	0.000	0.000	0.146	0.000	0.000	0.000
Steele City	MT	Fallon	232.631	233.002	0.371	MT025	Gerdrum-Absher complex, 0 to 2 percent slopes	0.000	0.000	0.367	0.000	0.000	0.371	0.000	0.000	0.000
Steele City	MT	Fallon	233.002	233.130	0.129	MT025	Floweree silt loam, 0 to 2 percent slopes	0.000	0.000	0.129	0.129	0.000	0.129	0.000	0.000	0.000
Steele City	MT	Fallon	233.130	233.191	0.061	MT025	Archin-Absher complex, 0 to 2 percent slopes	0.000	0.000	0.059	0.000	0.000	0.061	0.000	0.000	0.000
Steele City	MT	Fallon	233.191	233.661	0.470	MT025	Floweree silt loam, 0 to 2 percent slopes	0.000	0.000	0.470	0.470	0.000	0.470	0.000	0.000	0.000
Steele City	MT	Fallon	233.661	234.048	0.387	MT025	Kremlin loam, 0 to 2 percent slopes	0.000	0.000	0.359	0.387	0.000	0.387	0.015	0.000	0.015
Steele City	MT	Fallon	234.048	234.154	0.106	MT025	Gerdrum-Absher complex, 2 to 8 percent slopes	0.000	0.000	0.105	0.000	0.000	0.106	0.000	0.000	0.000
Steele City	MT	Fallon	234.154	234.479	0.325	MT025	Havre-Harlake complex, 0 to 2 percent slopes	0.000	0.000	0.023	0.325	0.006	0.325	0.000	0.000	0.000
Steele City	MT	Fallon	234.479	234.598	0.119	MT025	Gerdrum-Absher complex, 2 to 8 percent slopes	0.000	0.000	0.118	0.000	0.000	0.119	0.000	0.000	0.000
Steele City	MT	Fallon	234.598	234.675	0.078	MT025	Bonfri-Parchin complex, 2 to 8 percent slopes	0.000	0.001	0.076	0.000	0.000	0.078	0.000	0.000	0.000
Steele City	MT	Fallon	234.675	234.744	0.069	MT025	Gerdrum-Absher complex, 2 to 8 percent slopes	0.000	0.000	0.068	0.000	0.000	0.069	0.000	0.000	0.000
Steele City	MT	Fallon	234.744	234.897	0.153	MT025	Bonfri-Parchin complex, 2 to 8 percent slopes	0.000	0.002	0.150	0.000	0.000	0.153	0.000	0.000	0.000
Steele City	MT	Fallon	234.897	235.102	0.205	MT025	Yamacall-Busby-Blacksheep complex, 4 to 15 percent slopes	0.000	0.158	0.090	0.000	0.000	0.205	0.000	0.000	0.000
Steele City	MT	Fallon	235.102	235.241	0.139	MT025	Archin loam, 2 to 8 percent slopes	0.000	0.000	0.131	0.000	0.000	0.139	0.000	0.000	0.000
Steele City	MT	Fallon	235.241	235.301	0.060	MT025	Bonfri-Parchin complex, 2 to 8 percent slopes	0.000	0.001	0.059	0.000	0.000	0.060	0.000	0.000	0.000
Steele City	MT	Fallon	235.301	235.402	0.101	MT025	Archin loam, 2 to 8 percent slopes	0.000	0.000	0.095	0.000	0.000	0.101	0.000	0.000	0.000
Steele City	MT	Fallon	235.402	235.495	0.093	MT025	Cambeth silt loam, 2 to 8 percent slopes	0.000	0.003	0.093	0.093	0.000	0.093	0.000	0.000	0.000
Steele City	MT	Fallon	235.495	235.671	0.176	MT025	Archin loam, 2 to 8 percent slopes	0.000	0.000	0.166	0.000	0.000	0.176	0.000	0.000	0.000
Steele City	MT	Fallon	235.671	235.746	0.075	MT025	Yamacall loam, 2 to 8 percent slopes	0.000	0.000	0.071	0.000	0.000	0.075	0.000	0.000	0.000

Appendix K – Soils by Milepost – Steele City Segment

Pipeline Segment	State	County	Beginning Milepost	Ending Milepost	Miles	Soil Series	Soil Series Name	Wind (miles)	Water (miles)	Low revegetation on Potential (miles)	Prime Farmland (miles)	Hydric Soils (miles)	Compaction on Prone (miles)	Stoney – Rocky (miles)	Shallow Bedrock (miles)	Droghty (miles)
Steele City	MT	Fallon	235.746	235.854	0.109	MT025	Delpoint-Cabbart complex, 8 to 15 percent slopes	0.000	0.105	0.102	0.000	0.000	0.109	0.000	0.000	0.000
Steele City	MT	Fallon	235.854	235.966	0.112	MT025	Yamacall loam, 2 to 8 percent slopes	0.000	0.000	0.106	0.000	0.000	0.112	0.000	0.000	0.000
Steele City	MT	Fallon	235.966	236.025	0.059	MT025	Delpoint-Cabbart complex, 8 to 15 percent slopes	0.000	0.057	0.056	0.000	0.000	0.059	0.000	0.000	0.000
Steele City	MT	Fallon	236.025	236.269	0.243	MT025	Busby fine sandy loam, 8 to 15 percent slopes	0.000	0.224	0.024	0.243	0.000	0.243	0.000	0.000	0.000
Steele City	MT	Fallon	236.269	236.316	0.048	MT025	Yamacall loam, 2 to 8 percent slopes	0.000	0.000	0.045	0.000	0.000	0.048	0.000	0.000	0.000
Steele City	MT	Fallon	236.316	236.488	0.172	MT025	Eapa loam, 2 to 8 percent slopes	0.000	0.005	0.024	0.172	0.000	0.172	0.000	0.000	0.000
Steele City	MT	Fallon	236.488	236.764	0.276	MT025	Chinook sandy loam, 2 to 8 percent slopes	0.000	0.000	0.014	0.276	0.000	0.276	0.003	0.000	0.003
Steele City	MT	Fallon	236.764	236.996	0.232	MT025	Kremlin loam, 2 to 8 percent slopes	0.000	0.007	0.021	0.232	0.000	0.232	0.014	0.000	0.007
Steele City	MT	Fallon	236.996	237.185	0.189	MT025	Chinook sandy loam, 2 to 8 percent slopes	0.000	0.000	0.009	0.189	0.000	0.189	0.002	0.000	0.002
Steele City	MT	Fallon	237.185	237.254	0.069	MT025	Twilight fine sandy loam, 8 to 15 percent slopes	0.000	0.004	0.061	0.069	0.000	0.069	0.000	0.000	0.000
Steele City	MT	Fallon	237.254	237.304	0.050	MT025	Yamacall loam, 2 to 8 percent slopes	0.000	0.000	0.047	0.000	0.000	0.050	0.000	0.000	0.000
Steele City	MT	Fallon	237.304	237.348	0.044	MT025	Chinook sandy loam, 2 to 8 percent slopes	0.000	0.000	0.002	0.044	0.000	0.044	0.000	0.000	0.000
Steele City	MT	Fallon	237.348	237.359	0.011	MT025	Yamacall loam, 2 to 8 percent slopes	0.000	0.000	0.010	0.000	0.000	0.011	0.000	0.000	0.000
Steele City	MT	Fallon	237.359	237.438	0.079	MT025	Chinook sandy loam, 2 to 8 percent slopes	0.000	0.000	0.004	0.079	0.000	0.079	0.001	0.000	0.001
Steele City	MT	Fallon	237.438	238.041	0.603	MT025	Yamacall loam, 2 to 8 percent slopes	0.000	0.000	0.573	0.000	0.000	0.603	0.000	0.000	0.000
Steele City	MT	Fallon	238.041	238.171	0.130	MT025	Busby-Blacksheep-Twilight fine sandy loams, 8 to 25 percent slopes	0.000	0.125	0.027	0.000	0.000	0.130	0.000	0.000	0.000
Steele City	MT	Fallon	238.171	238.272	0.102	MT025	Yamacall loam, 2 to 8 percent slopes	0.000	0.000	0.097	0.000	0.000	0.102	0.000	0.000	0.000
Steele City	MT	Fallon	238.272	238.351	0.079	MT025	Delpoint-Cabbart complex, 8 to 15 percent slopes	0.000	0.076	0.074	0.000	0.000	0.079	0.000	0.000	0.000
Steele City	MT	Fallon	238.351	238.444	0.093	MT025	Busby fine sandy loam, 8 to 15 percent slopes	0.000	0.086	0.009	0.093	0.000	0.093	0.000	0.000	0.000
Steele City	MT	Fallon	238.444	238.525	0.081	MT025	Busby fine sandy loam, 2 to 8 percent slopes	0.000	0.002	0.007	0.081	0.000	0.081	0.000	0.000	0.000
Steele City	MT	Fallon	238.525	238.583	0.058	MT025	Busby fine sandy loam, 8 to 15 percent slopes	0.000	0.054	0.006	0.058	0.000	0.058	0.000	0.000	0.000
Steele City	MT	Fallon	238.583	238.605	0.022	MT025	Eapa loam, 2 to 8 percent slopes	0.000	0.001	0.003	0.022	0.000	0.022	0.000	0.000	0.000
Steele City	MT	Fallon	238.605	238.652	0.047	MT025	Busby fine sandy loam, 8 to 15 percent slopes	0.000	0.043	0.005	0.047	0.000	0.047	0.000	0.000	0.000
Steele City	MT	Fallon	238.652	238.761	0.109	MT025	Chinook sandy loam, 2 to 8 percent slopes	0.000	0.000	0.005	0.109	0.000	0.109	0.001	0.000	0.001
Steele City	MT	Fallon	238.761	238.813	0.052	MT025	Assinniboine sandy clay loam, 2 to 8 percent slopes	0.000	0.000	0.006	0.052	0.000	0.052	0.000	0.000	0.000
Steele City	MT	Fallon	238.813	239.084	0.271	MT025	Busby fine sandy loam, 2 to 8 percent slopes	0.000	0.008	0.024	0.271	0.000	0.271	0.000	0.000	0.000
Steele City	MT	Fallon	239.084	239.215	0.131	MT025	Chinook sandy loam, 2 to 8 percent slopes	0.000	0.000	0.007	0.131	0.000	0.131	0.001	0.000	0.001
Steele City	MT	Fallon	239.215	239.399	0.184	MT025	Busby fine sandy loam, 2 to 8 percent slopes	0.000	0.006	0.017	0.184	0.000	0.184	0.000	0.000	0.000
Steele City	MT	Fallon	239.399	239.498	0.099	MT025	Assinniboine sandy clay loam, 2 to 8 percent slopes	0.000	0.000	0.012	0.099	0.000	0.099	0.000	0.000	0.000
Steele City	MT	Fallon	239.498	239.727	0.229	MT025	Busby fine sandy loam, 2 to 8 percent slopes	0.000	0.007	0.021	0.229	0.000	0.229	0.000	0.000	0.000
Steele City	MT	Fallon	239.727	239.959	0.232	MT025	Blacksheep-Twilight fine sandy loams, 8 to 15 percent slopes	0.000	0.016	0.118	0.000	0.000	0.232	0.000	0.000	0.000
Steele City	MT	Fallon	239.959	240.026	0.067	MT025	Busby fine sandy loam, 2 to 8 percent slopes	0.000	0.002	0.006	0.067	0.000	0.067	0.000	0.000	0.000
Steele City	MT	Fallon	240.026	240.297	0.271	MT025	Blacksheep-Twilight fine sandy loams, 8 to 15 percent slopes	0.000	0.019	0.138	0.000	0.000	0.271	0.000	0.000	0.000
Steele City	MT	Fallon	240.297	240.336	0.040	MT025	Delpoint-Cabbart complex, 8 to 15 percent slopes	0.000	0.039	0.037	0.000	0.000	0.040	0.000	0.000	0.000
Steele City	MT	Fallon	240.336	240.548	0.212	MT025	Twilight-Delpoint complex, 2 to 8 percent slopes	0.000	0.000	0.203	0.000	0.000	0.212	0.000	0.000	0.000
Steele City	MT	Fallon	240.548	240.597	0.049	MT025	Delpoint-Cabbart complex, 8 to 15 percent slopes	0.000	0.047	0.046	0.000	0.000	0.049	0.000	0.000	0.000
Steele City	MT	Fallon	240.597	240.984	0.387	MT025	Busby fine sandy loam, 8 to 15 percent slopes	0.000	0.356	0.039	0.387	0.000	0.387	0.000	0.000	0.000
Steele City	MT	Fallon	240.984	241.200	0.216	MT025	Blacksheep-Twilight fine sandy loams, 8 to 15 percent slopes	0.000	0.015	0.110	0.000	0.000	0.216	0.000	0.000	0.000
Steele City	MT	Fallon	241.200	241.216	0.016	MT025	Blacksheep-Rock outcrop complex, 25 to 50 percent	0.000	0.011	0.001	0.000	0.000	0.016	0.000	0.000	0.000
Steele City	MT	Fallon	241.216	241.523	0.308	MT025	Blacksheep-Twilight fine sandy loams, 8 to 15 percent slopes	0.000	0.022	0.157	0.000	0.000	0.308	0.000	0.000	0.000

Appendix K – Soils by Milepost – Steele City Segment

Pipeline Segment	State	County	Beginning Milepost	Ending Milepost	Miles	Soil Series	Soil Series Name	Wind (miles)	Water (miles)	Low revegetation on Potential (miles)	Prime Farmland (miles)	Hydric Soils (miles)	Compaction on Prone (miles)	Stoney – Rocky (miles)	Shallow Bedrock (miles)	Droghty (miles)
Steele City	MT	Fallon	241.523	241.699	0.175	MT025	Bonfri loam, 8 to 15 percent slopes	0.000	0.165	0.170	0.000	0.000	0.175	0.000	0.000	0.000
Steele City	MT	Fallon	241.699	242.744	1.045	MT025	Gerdrum clay loam, 2 to 8 percent slopes	0.000	0.000	1.014	0.000	0.000	1.045	0.000	0.000	0.000
Steele City	MT	Fallon	242.744	242.809	0.065	MT025	Neldore-Bascovy clays, 4 to 15 percent slopes	0.000	0.064	0.061	0.000	0.001	0.065	0.031	0.000	0.000
Steele City	MT	Fallon	242.809	242.955	0.146	MT025	Gerdrum clay loam, 2 to 8 percent slopes	0.000	0.000	0.141	0.000	0.000	0.146	0.000	0.000	0.000
Steele City	MT	Fallon	242.955	243.252	0.298	MT025	Delpoint-Cabbart complex, 8 to 15 percent slopes	0.000	0.289	0.280	0.000	0.000	0.298	0.000	0.000	0.000
Steele City	MT	Fallon	243.252	243.342	0.090	MT025	Marvan silty clay, 2 to 8 percent slopes	0.000	0.000	0.088	0.000	0.001	0.090	0.000	0.000	0.000
Steele City	MT	Fallon	243.342	243.393	0.052	MT025	Bonfri-Cabbart loams, 8 to 15 percent slopes	0.000	0.048	0.049	0.000	0.000	0.052	0.000	0.000	0.000
Steele City	MT	Fallon	243.393	243.659	0.265	MT025	Bascovy clay, 2 to 8 percent slopes	0.000	0.008	0.255	0.000	0.000	0.265	0.008	0.000	0.000
Steele City	MT	Fallon	243.659	243.848	0.189	MT025	Eapa loam, 2 to 8 percent slopes	0.000	0.006	0.027	0.189	0.000	0.189	0.000	0.000	0.000
Steele City	MT	Fallon	243.848	244.022	0.174	MT025	Gerdrum-Absher complex, 2 to 8 percent slopes	0.000	0.000	0.172	0.000	0.000	0.174	0.000	0.000	0.000
Steele City	MT	Fallon	244.022	244.101	0.079	MT025	Havre loam, 0 to 2 percent slopes	0.000	0.000	0.009	0.079	0.002	0.079	0.000	0.000	0.000
Steele City	MT	Fallon	244.101	244.428	0.327	MT025	Bonfri loam, 2 to 8 percent slopes	0.000	0.003	0.318	0.327	0.000	0.327	0.000	0.000	0.000
Steele City	MT	Fallon	244.428	244.494	0.066	MT025	Bonfri-Cambeth complex, 2 to 8 percent slopes	0.000	0.001	0.063	0.066	0.000	0.066	0.000	0.000	0.000
Steele City	MT	Fallon	244.494	244.628	0.134	MT025	Eapa loam, 2 to 8 percent slopes	0.000	0.004	0.019	0.134	0.000	0.134	0.000	0.000	0.000
Steele City	MT	Fallon	244.628	245.164	0.536	MT025	Bonfri-Cambeth complex, 2 to 8 percent slopes	0.000	0.005	0.515	0.536	0.000	0.536	0.000	0.000	0.000
Steele City	MT	Fallon	245.164	245.240	0.076	MT025	Bonfri-Cabbart loams, 8 to 15 percent slopes	0.000	0.071	0.073	0.000	0.000	0.076	0.000	0.000	0.000
Steele City	MT	Fallon	245.240	245.354	0.114	MT025	Eapa loam, 2 to 8 percent slopes	0.000	0.003	0.016	0.114	0.000	0.114	0.000	0.000	0.000
Steele City	MT	Fallon	245.354	245.431	0.078	MT025	Bonfri loam, 2 to 8 percent slopes	0.000	0.001	0.075	0.078	0.000	0.078	0.000	0.000	0.000
Steele City	MT	Fallon	245.431	245.877	0.445	MT025	Eapa loam, 2 to 8 percent slopes	0.000	0.013	0.062	0.445	0.000	0.445	0.000	0.000	0.000
Steele City	MT	Fallon	245.877	245.915	0.038	MT025	Tanna-Ethridge silty clay loams, 2 to 8 percent slopes	0.000	0.000	0.021	0.038	0.000	0.038	0.000	0.000	0.000
Steele City	MT	Fallon	245.915	245.926	0.011	MT025	Gerdrum clay loam, 2 to 8 percent slopes	0.000	0.000	0.011	0.000	0.000	0.011	0.000	0.000	0.000
Steele City	MT	Fallon	245.926	246.538	0.612	MT025	Tanna-Ethridge silty clay loams, 2 to 8 percent slopes	0.000	0.000	0.337	0.612	0.000	0.612	0.000	0.000	0.000
Steele City	MT	Fallon	246.538	247.092	0.554	MT025	Bonfri-Cambeth complex, 2 to 8 percent slopes	0.000	0.006	0.532	0.554	0.000	0.554	0.000	0.000	0.000
Steele City	MT	Fallon	247.092	247.170	0.079	MT025	Kirby-Cabbart complex, 8 to 25 percent slopes	0.000	0.075	0.031	0.000	0.000	0.079	0.042	0.000	0.000
Steele City	MT	Fallon	247.170	247.209	0.039	MT025	Cambeth-Cabbart silt loams, 2 to 8 percent slopes	0.000	0.001	0.038	0.000	0.000	0.039	0.000	0.000	0.000
Steele City	MT	Fallon	247.209	247.432	0.222	MT025	Cabbart-Cambeth silt loams, 8 to 15 percent slopes	0.000	0.207	0.207	0.000	0.000	0.222	0.000	0.000	0.000
Steele City	MT	Fallon	247.432	247.555	0.123	MT025	Cabbart-Rock outcrop-Delpoint complex, 15 to 50 percent slopes	0.000	0.094	0.091	0.000	0.001	0.123	0.000	0.000	0.000
Steele City	MT	Fallon	247.555	247.871	0.316	MT025	Tanna-Ethridge silty clay loams, 2 to 8 percent slopes	0.000	0.000	0.174	0.316	0.000	0.316	0.000	0.000	0.000
Steele City	MT	Fallon	247.871	248.091	0.220	MT025	Tanna-Ethridge silty clay loams, 8 to 15 percent slopes	0.000	0.200	0.128	0.000	0.000	0.220	0.000	0.000	0.000
Steele City	MT	Fallon	248.091	248.170	0.078	MT025	Cabbart-Rock outcrop-Delpoint complex, 15 to 50 percent slopes	0.000	0.060	0.058	0.000	0.001	0.078	0.000	0.000	0.000
Steele City	MT	Fallon	248.170	248.438	0.268	MT025	Tanna-Ethridge silty clay loams, 8 to 15 percent slopes	0.000	0.244	0.155	0.000	0.000	0.268	0.000	0.000	0.000
Steele City	MT	Fallon	248.438	248.564	0.127	MT025	Cabbart-Rock outcrop-Delpoint complex, 15 to 50 percent slopes	0.000	0.096	0.094	0.000	0.001	0.127	0.000	0.000	0.000
Steele City	MT	Fallon	248.564	248.950	0.385	MT025	Cabbart-Cambeth silt loams, 8 to 15 percent slopes	0.000	0.358	0.358	0.000	0.000	0.385	0.000	0.000	0.000
Steele City	MT	Fallon	248.950	249.286	0.336	MT025	Bonfri loam, 2 to 8 percent slopes	0.000	0.003	0.326	0.336	0.000	0.336	0.000	0.000	0.000
Steele City	MT	Fallon	249.286	249.350	0.064	MT025	Bonfri-Cabbart loams, 8 to 15 percent slopes	0.000	0.061	0.062	0.000	0.000	0.064	0.000	0.000	0.000
Steele City	MT	Fallon	249.350	249.453	0.103	MT025	Kirby-Cabbart complex, 8 to 25 percent slopes	0.000	0.098	0.040	0.000	0.000	0.103	0.054	0.000	0.000
Steele City	MT	Fallon	249.453	249.476	0.023	MT025	Bonfri-Cabbart loams, 8 to 15 percent slopes	0.000	0.022	0.022	0.000	0.000	0.023	0.000	0.000	0.000

Appendix K – Soils by Milepost – Steele City Segment

Pipeline Segment	State	County	Beginning Milepost	Ending Milepost	Miles	Soil Series	Soil Series Name	Wind (miles)	Water (miles)	Low revegetation on Potential (miles)	Prime Farmland (miles)	Hydric Soils (miles)	Compaction on Prone (miles)	Stoney – Rocky (miles)	Shallow Bedrock (miles)	Droghty (miles)
Steele City	MT	Fallon	249.476	249.486	0.010	MT025	Kirby-Cabbart complex, 8 to 25 percent slopes	0.000	0.010	0.004	0.000	0.000	0.010	0.005	0.000	0.000
Steele City	MT	Fallon	249.486	249.493	0.007	MT025	Bonfri-Cabbart loams, 8 to 15 percent slopes	0.000	0.007	0.007	0.000	0.000	0.007	0.000	0.000	0.000
Steele City	MT	Fallon	249.493	249.494	0.000	MT025	Kirby-Cabbart complex, 8 to 25 percent slopes	0.000	0.000	0.000	0.000	0.000	0.000	0.000	0.000	0.000
Steele City	MT	Fallon	249.494	249.660	0.167	MT025	Bonfri-Cabbart loams, 8 to 15 percent slopes	0.000	0.157	0.160	0.000	0.000	0.167	0.000	0.000	0.000
Steele City	MT	Fallon	249.660	249.804	0.143	MT025	Havre loam, 0 to 2 percent slopes	0.000	0.000	0.017	0.143	0.004	0.143	0.000	0.000	0.000
Steele City	MT	Fallon	249.804	249.887	0.083	MT025	Kirby-Cabbart complex, 8 to 25 percent slopes	0.000	0.079	0.032	0.000	0.000	0.083	0.044	0.000	0.000
Steele City	MT	Fallon	249.887	249.991	0.104	MT025	Bonfri-Cabbart loams, 8 to 15 percent slopes	0.000	0.098	0.100	0.000	0.000	0.104	0.000	0.000	0.000
Steele City	MT	Fallon	249.991	250.070	0.079	MT025	Gerdrum clay loam, 2 to 8 percent slopes	0.000	0.000	0.077	0.000	0.000	0.079	0.000	0.000	0.000
Steele City	MT	Fallon	250.070	250.165	0.095	MT025	Bonfri-Cabbart loams, 8 to 15 percent slopes	0.000	0.089	0.091	0.000	0.000	0.095	0.000	0.000	0.000
Steele City	MT	Fallon	250.165	250.384	0.219	MT025	Gerdrum clay loam, 2 to 8 percent slopes	0.000	0.000	0.212	0.000	0.000	0.219	0.000	0.000	0.000
Steele City	MT	Fallon	250.384	250.477	0.093	MT025	Havre loam, 0 to 2 percent slopes	0.000	0.000	0.011	0.093	0.003	0.093	0.000	0.000	0.000
Steele City	MT	Fallon	250.477	250.584	0.107	MT025	Bonfri-Cambeth complex, 2 to 8 percent slopes	0.000	0.001	0.103	0.107	0.000	0.107	0.000	0.000	0.000
Steele City	MT	Fallon	250.584	250.815	0.231	MT025	Cabbart-Rock outcrop-Delpoint complex, 15 to 50 percent slopes	0.000	0.175	0.171	0.000	0.002	0.231	0.000	0.000	0.000
Steele City	MT	Fallon	250.815	250.894	0.079	MT025	Bonfri-Cabbart loams, 8 to 15 percent slopes	0.000	0.074	0.075	0.000	0.000	0.079	0.000	0.000	0.000
Steele City	MT	Fallon	250.894	250.998	0.105	MT025	Cabbart silt loam, 4 to 15 percent slopes	0.000	0.095	0.098	0.000	0.000	0.105	0.000	0.000	0.000
Steele City	MT	Fallon	250.998	251.376	0.378	MT025	Cabbart-Cambeth silt loams, 8 to 15 percent slopes	0.000	0.352	0.352	0.000	0.000	0.378	0.000	0.000	0.000
Steele City	MT	Fallon	251.376	251.436	0.059	MT025	Cabbart-Rock outcrop-Delpoint complex, 15 to 50 percent slopes	0.000	0.045	0.044	0.000	0.001	0.059	0.000	0.000	0.000
Steele City	MT	Fallon	251.436	251.520	0.084	MT025	Tanna-Ethridge silty clay loams, 2 to 8 percent slopes	0.000	0.000	0.046	0.084	0.000	0.084	0.000	0.000	0.000
Steele City	MT	Fallon	251.520	251.747	0.227	MT025	Gerdrum clay loam, 2 to 8 percent slopes	0.000	0.000	0.220	0.000	0.000	0.227	0.000	0.000	0.000
Steele City	MT	Fallon	251.747	251.781	0.034	MT025	Bonfri-Cabbart loams, 8 to 15 percent slopes	0.000	0.032	0.033	0.000	0.000	0.034	0.000	0.000	0.000
Steele City	MT	Fallon	251.781	251.892	0.112	MT025	Gerdrum clay loam, 2 to 8 percent slopes	0.000	0.000	0.108	0.000	0.000	0.112	0.000	0.000	0.000
Steele City	MT	Fallon	251.892	251.978	0.085	MT025	Cabbart-Rock outcrop-Delpoint complex, 15 to 50 percent slopes	0.000	0.065	0.063	0.000	0.001	0.085	0.000	0.000	0.000
Steele City	MT	Fallon	251.978	252.367	0.389	MT025	Twilight fine sandy loam, 8 to 15 percent slopes	0.000	0.023	0.342	0.389	0.000	0.389	0.000	0.000	0.000
Steele City	MT	Fallon	252.367	252.834	0.467	MT025	Bonfri-Cabbart loams, 8 to 15 percent slopes	0.000	0.439	0.448	0.000	0.000	0.467	0.000	0.000	0.000
Steele City	MT	Fallon	252.834	252.882	0.048	MT025	Cabbart-Rock outcrop-Delpoint complex, 15 to 50 percent slopes	0.000	0.037	0.036	0.000	0.000	0.048	0.000	0.000	0.000
Steele City	MT	Fallon	252.882	253.067	0.185	MT025	Bonfri-Cabbart loams, 8 to 15 percent slopes	0.000	0.174	0.178	0.000	0.000	0.185	0.000	0.000	0.000
Steele City	MT	Fallon	253.067	253.109	0.041	MT025	Cabbart-Rock outcrop-Delpoint complex, 15 to 50 percent slopes	0.000	0.031	0.031	0.000	0.000	0.041	0.000	0.000	0.000
Steele City	MT	Fallon	253.109	253.229	0.121	MT025	Bonfri-Cabbart loams, 8 to 15 percent slopes	0.000	0.113	0.116	0.000	0.000	0.121	0.000	0.000	0.000
Steele City	MT	Fallon	253.229	254.413	1.184	MT025	Cabbart-Rock outcrop-Delpoint complex, 15 to 50 percent slopes	0.000	0.900	0.876	0.000	0.012	1.184	0.000	0.000	0.000
Steele City	MT	Fallon	254.413	254.595	0.182	MT025	Badland	0.000	0.027	0.027	0.000	0.000	0.182	0.000	0.000	0.000
Steele City	MT	Fallon	254.595	254.648	0.053	MT025	Yamacall-Delpoint loams, 2 to 8 percent slopes	0.000	0.002	0.051	0.000	0.000	0.053	0.000	0.000	0.000
Steele City	MT	Fallon	254.648	254.847	0.200	MT025	Badland	0.000	0.030	0.030	0.000	0.000	0.200	0.000	0.000	0.000
Steele City	MT	Fallon	254.847	254.924	0.077	MT025	Twilight fine sandy loam, 2 to 8 percent slopes	0.000	0.000	0.068	0.077	0.000	0.077	0.000	0.000	0.000
Steele City	MT	Fallon	254.924	254.955	0.031	MT025	Badland	0.000	0.005	0.005	0.000	0.000	0.031	0.000	0.000	0.000
Steele City	MT	Fallon	254.955	255.100	0.145	MT025	Twilight fine sandy loam, 2 to 8 percent slopes	0.000	0.000	0.128	0.145	0.000	0.145	0.000	0.000	0.000
Steele City	MT	Fallon	255.100	255.229	0.128	MT025	Badland	0.000	0.019	0.019	0.000	0.000	0.128	0.000	0.000	0.000
Steele City	MT	Fallon	255.229	255.386	0.158	MT025	Twilight fine sandy loam, 2 to 8 percent slopes	0.000	0.000	0.139	0.158	0.000	0.158	0.000	0.000	0.000
Steele City	MT	Fallon	255.386	255.526	0.140	MT025	Yamacall-Delpoint loams, 2 to 8 percent slopes	0.000	0.004	0.136	0.000	0.000	0.140	0.000	0.000	0.000

Appendix K – Soils by Milepost – Steele City Segment

Pipeline Segment	State	County	Beginning Milepost	Ending Milepost	Miles	Soil Series	Soil Series Name	Wind (miles)	Water (miles)	Low revegetation on Potential (miles)	Prime Farmland (miles)	Hydric Soils (miles)	Compaction on Prone (miles)	Stoney – Rocky (miles)	Shallow Bedrock (miles)	Droghty (miles)
Steele City	MT	Fallon	255.526	255.652	0.125	MT025	Archin loam, 2 to 8 percent slopes	0.000	0.000	0.118	0.000	0.000	0.125	0.000	0.000	0.000
Steele City	MT	Fallon	255.652	255.743	0.091	MT025	Busby fine sandy loam, 8 to 15 percent slopes	0.000	0.084	0.009	0.091	0.000	0.091	0.000	0.000	0.000
Steele City	MT	Fallon	255.743	255.904	0.161	MT025	Archin-Ynot complex, 2 to 8 percent slopes	0.000	0.000	0.087	0.000	0.000	0.161	0.000	0.000	0.000
Steele City	MT	Fallon	255.904	256.004	0.100	MT025	Creed loam, 2 to 8 percent slopes	0.000	0.000	0.097	0.000	0.000	0.100	0.000	0.000	0.000
Steele City	MT	Fallon	256.004	256.345	0.341	MT025	Carfall-Assinniboine complex, 2 to 8 percent slopes	0.000	0.000	0.038	0.341	0.000	0.341	0.000	0.000	0.000
Steele City	MT	Fallon	256.345	256.477	0.132	MT025	Carfall-Assinniboine complex, 8 to 15 percent slopes	0.000	0.124	0.012	0.000	0.000	0.132	0.000	0.000	0.000
Steele City	MT	Fallon	256.477	256.597	0.120	MT025	Ynot sandy loam, 2 to 8 percent slopes	0.000	0.000	0.004	0.120	0.000	0.120	0.000	0.000	0.000
Steele City	MT	Fallon	256.597	256.625	0.028	MT025	Archin-Absher complex, 2 to 8 percent slopes	0.000	0.000	0.026	0.000	0.000	0.028	0.000	0.000	0.000
Steele City	MT	Fallon	256.625	256.775	0.150	MT025	Archin loam, 2 to 8 percent slopes	0.000	0.000	0.141	0.000	0.000	0.150	0.000	0.000	0.000
Steele City	MT	Fallon	256.775	257.089	0.314	MT025	Archin-Ynot complex, 2 to 8 percent slopes	0.000	0.000	0.170	0.000	0.000	0.314	0.000	0.000	0.000
Steele City	MT	Fallon	257.089	257.305	0.216	MT025	Ynot sandy loam, 2 to 8 percent slopes	0.000	0.000	0.006	0.216	0.000	0.216	0.000	0.000	0.000
Steele City	MT	Fallon	257.305	257.519	0.213	MT025	Carfall-Assinniboine complex, 2 to 8 percent slopes	0.000	0.000	0.023	0.213	0.000	0.213	0.000	0.000	0.000
Steele City	MT	Fallon	257.519	257.598	0.080	MT025	Ynot sandy loam, 2 to 8 percent slopes	0.000	0.000	0.002	0.080	0.000	0.080	0.000	0.000	0.000
Steele City	MT	Fallon	257.598	257.783	0.184	MT025	Carfall-Assinniboine complex, 8 to 15 percent slopes	0.000	0.173	0.017	0.000	0.000	0.184	0.000	0.000	0.000
Steele City	MT	Fallon	257.783	257.906	0.124	MT025	Archin loam, 2 to 8 percent slopes	0.000	0.000	0.116	0.000	0.000	0.124	0.000	0.000	0.000
Steele City	MT	Fallon	257.906	257.941	0.035	MT025	Chinook sandy loam, 2 to 8 percent slopes	0.000	0.000	0.002	0.035	0.000	0.035	0.000	0.000	0.000
Steele City	MT	Fallon	257.941	258.012	0.072	MT025	Archin-Absher complex, 2 to 8 percent slopes	0.000	0.000	0.067	0.000	0.000	0.072	0.000	0.000	0.000
Steele City	MT	Fallon	258.012	258.075	0.063	MT025	Archin loam, 2 to 8 percent slopes	0.000	0.000	0.059	0.000	0.000	0.063	0.000	0.000	0.000
Steele City	MT	Fallon	258.075	258.106	0.031	MT025	Archin-Absher complex, 2 to 8 percent slopes	0.000	0.000	0.029	0.000	0.000	0.031	0.000	0.000	0.000
Steele City	MT	Fallon	258.106	258.223	0.117	MT025	Havre loam, saline, 0 to 2 percent slopes	0.000	0.000	0.113	0.000	0.001	0.117	0.000	0.000	0.000
Steele City	MT	Fallon	258.223	258.349	0.127	MT025	Archin-Absher complex, 0 to 2 percent slopes	0.000	0.000	0.123	0.000	0.000	0.127	0.000	0.000	0.000
Steele City	MT	Fallon	258.349	258.458	0.109	MT025	Archin loam, 2 to 8 percent slopes	0.000	0.000	0.102	0.000	0.000	0.109	0.000	0.000	0.000
Steele City	MT	Fallon	258.458	258.591	0.133	MT025	Archin-Absher complex, 2 to 8 percent slopes	0.000	0.000	0.125	0.000	0.000	0.133	0.000	0.000	0.000
Steele City	MT	Fallon	258.591	258.652	0.061	MT025	Archin-Ynot complex, 2 to 8 percent slopes	0.000	0.000	0.033	0.000	0.000	0.061	0.000	0.000	0.000
Steele City	MT	Fallon	258.652	258.719	0.067	MT025	Archin-Absher complex, 2 to 8 percent slopes	0.000	0.000	0.063	0.000	0.000	0.067	0.000	0.000	0.000
Steele City	MT	Fallon	258.719	258.880	0.162	MT025	Yamacall-Cabbart loams, 15 to 35 percent slopes	0.000	0.150	0.152	0.000	0.002	0.162	0.000	0.000	0.000
Steele City	MT	Fallon	258.880	259.085	0.205	MT025	Twilight-Bonfri complex, 8 to 15 percent slopes	0.000	0.086	0.193	0.000	0.000	0.205	0.000	0.000	0.000
Steele City	MT	Fallon	259.085	259.274	0.189	MT025	Archin-Ynot complex, 2 to 8 percent slopes	0.000	0.000	0.102	0.000	0.000	0.189	0.000	0.000	0.000
Steele City	MT	Fallon	259.274	259.375	0.101	MT025	Busby-Blacksheep-Twilight fine sandy loams, 8 to 25 percent slopes	0.000	0.097	0.021	0.000	0.000	0.101	0.000	0.000	0.000
Steele City	MT	Fallon	259.375	259.407	0.032	MT025	Archin-Ynot complex, 2 to 8 percent slopes	0.000	0.000	0.017	0.000	0.000	0.032	0.000	0.000	0.000
Steele City	MT	Fallon	259.407	259.518	0.111	MT025	Archin loam, 2 to 8 percent slopes	0.000	0.000	0.104	0.000	0.000	0.111	0.000	0.000	0.000
Steele City	MT	Fallon	259.518	259.665	0.147	MT025	Twilight-Bonfri complex, 8 to 15 percent slopes	0.000	0.062	0.138	0.000	0.000	0.147	0.000	0.000	0.000
Steele City	MT	Fallon	259.665	260.103	0.438	MT025	Carfall-Assinniboine complex, 2 to 8 percent slopes	0.000	0.000	0.048	0.438	0.000	0.438	0.000	0.000	0.000
Steele City	MT	Fallon	260.103	260.184	0.082	MT025	Archin-Absher complex, 2 to 8 percent slopes	0.000	0.000	0.077	0.000	0.000	0.082	0.000	0.000	0.000
Steele City	MT	Fallon	260.184	260.391	0.207	MT025	Carfall-Assinniboine complex, 8 to 15 percent slopes	0.000	0.194	0.019	0.000	0.000	0.207	0.000	0.000	0.000
Steele City	MT	Fallon	260.391	260.578	0.187	MT025	Archin-Ynot complex, 2 to 8 percent slopes	0.000	0.000	0.101	0.000	0.000	0.187	0.000	0.000	0.000
Steele City	MT	Fallon	260.578	260.702	0.124	MT025	Carfall loam, 2 to 8 percent slopes	0.000	0.000	0.007	0.124	0.000	0.124	0.000	0.000	0.000
Steele City	MT	Fallon	260.702	260.810	0.109	MT025	Archin-Ynot complex, 2 to 8 percent slopes	0.000	0.000	0.059	0.000	0.000	0.109	0.000	0.000	0.000
Steele City	MT	Fallon	260.810	260.879	0.069	MT025	Archin-Absher complex, 2 to 8 percent slopes	0.000	0.000	0.065	0.000	0.000	0.069	0.000	0.000	0.000
Steele City	MT	Fallon	260.879	261.038	0.159	MT025	Archin loam, 2 to 8 percent slopes	0.000	0.000	0.150	0.000	0.000	0.159	0.000	0.000	0.000
Steele City	MT	Fallon	261.038	261.109	0.071	MT025	Eapa-Yamacall loams, 2 to 8 percent slopes	0.000	0.002	0.039	0.000	0.000	0.071	0.000	0.000	0.000
Steele City	MT	Fallon	261.109	261.330	0.221	MT025	Ynot sandy loam, 2 to 8 percent slopes	0.000	0.000	0.007	0.221	0.000	0.221	0.000	0.000	0.000
Steele City	MT	Fallon	261.330	261.884	0.554	MT025	Ynot sandy loam, 0 to 2 percent slopes	0.000	0.000	0.039	0.554	0.000	0.554	0.000	0.000	0.022
Steele City	MT	Fallon	261.884	262.130	0.246	MT025	Carfall loam, 2 to 8 percent slopes	0.000	0.000	0.015	0.246	0.000	0.246	0.000	0.000	0.000

Appendix K – Soils by Milepost – Steele City Segment

Pipeline Segment	State	County	Beginning Milepost	Ending Milepost	Miles	Soil Series	Soil Series Name	Wind (miles)	Water (miles)	Low revegetation on Potential (miles)	Prime Farmland (miles)	Hydric Soils (miles)	Compaction on Prone (miles)	Stoney – Rocky (miles)	Shallow Bedrock (miles)	Droghty (miles)
Steele City	MT	Fallon	262.130	262.476	0.346	MT025	Hanly-Ryell fine sandy loams, 0 to 4 percent slopes	0.000	0.000	0.152	0.000	0.014	0.346	0.121	0.000	0.294
Steele City	MT	Fallon	262.476	262.532	0.056	MT025	Yawdim-Blacksheep-Rock outcrop complex, 15 to 45 percent slopes	0.000	0.043	0.003	0.000	0.000	0.056	0.000	0.000	0.000
Steele City	MT	Fallon	262.532	262.806	0.274	MT025	Ynot sandy loam, 2 to 8 percent slopes	0.000	0.000	0.008	0.274	0.000	0.274	0.000	0.000	0.000
Steele City	MT	Fallon	262.806	263.242	0.436	MT025	Chinook-Archin complex, 2 to 8 percent slopes	0.000	0.000	0.201	0.000	0.000	0.436	0.000	0.000	0.000
Steele City	MT	Fallon	263.242	263.305	0.063	MT025	Ynot sandy loam, 2 to 8 percent slopes	0.000	0.000	0.002	0.063	0.000	0.063	0.000	0.000	0.000
Steele City	MT	Fallon	263.305	263.356	0.051	MT025	Chinook sandy loam, 8 to 15 percent slopes	0.000	0.005	0.004	0.051	0.000	0.051	0.000	0.000	0.000
Steele City	MT	Fallon	263.356	263.390	0.034	MT025	Ynot sandy loam, 2 to 8 percent slopes	0.000	0.000	0.001	0.034	0.000	0.034	0.000	0.000	0.000
Steele City	MT	Fallon	263.390	263.414	0.024	MT025	Chinook-Archin complex, 2 to 8 percent slopes	0.000	0.000	0.011	0.000	0.000	0.024	0.000	0.000	0.000
Steele City	MT	Fallon	263.414	263.458	0.043	MT025	Ynot sandy loam, 2 to 8 percent slopes	0.000	0.000	0.001	0.043	0.000	0.043	0.000	0.000	0.000
Steele City	MT	Fallon	263.458	263.866	0.408	MT025	Chinook-Assinniboine complex, 2 to 8 percent slopes	0.000	0.000	0.024	0.408	0.000	0.408	0.000	0.000	0.000
Steele City	MT	Fallon	263.866	263.957	0.091	MT025	Chinook-Archin complex, 2 to 8 percent slopes	0.000	0.000	0.042	0.000	0.000	0.091	0.000	0.000	0.000
Steele City	MT	Fallon	263.957	264.035	0.078	MT025	Chinook sandy loam, 2 to 8 percent slopes	0.000	0.000	0.004	0.078	0.000	0.078	0.001	0.000	0.001
Steele City	MT	Fallon	264.035	264.267	0.232	MT025	Chinook-Archin complex, 2 to 8 percent slopes	0.000	0.000	0.107	0.000	0.000	0.232	0.000	0.000	0.000
Steele City	MT	Fallon	264.267	264.382	0.115	MT025	Badland	0.000	0.017	0.017	0.000	0.000	0.115	0.000	0.000	0.000
Steele City	MT	Fallon	264.382	264.783	0.401	MT025	Chinook-Archin complex, 2 to 8 percent slopes	0.000	0.000	0.184	0.000	0.000	0.401	0.000	0.000	0.000
Steele City	MT	Fallon	264.783	264.894	0.110	MT025	Badland	0.000	0.017	0.017	0.000	0.000	0.110	0.000	0.000	0.000
Steele City	MT	Fallon	264.894	264.944	0.050	MT025	Chinook-Archin complex, 2 to 8 percent slopes	0.000	0.000	0.023	0.000	0.000	0.050	0.000	0.000	0.000
Steele City	MT	Fallon	264.944	265.376	0.432	MT025	Zeona-Blacksheep-Rock outcrop complex, 4 to 15 percent slopes	0.173	0.048	0.048	0.000	0.000	0.432	0.000	0.000	0.173
Steele City	MT	Fallon	265.376	265.401	0.025	MT025	Chinook-Archin complex, 2 to 8 percent slopes	0.000	0.000	0.012	0.000	0.000	0.025	0.000	0.000	0.000
Steele City	MT	Fallon	265.401	265.510	0.108	MT025	Gerdrum-Absher complex, 2 to 8 percent slopes	0.000	0.000	0.107	0.000	0.000	0.108	0.000	0.000	0.000
Steele City	MT	Fallon	265.510	265.917	0.407	MT025	Chinook-Archin complex, 2 to 8 percent slopes	0.000	0.000	0.187	0.000	0.000	0.407	0.000	0.000	0.000
Steele City	MT	Fallon	265.917	266.445	0.529	MT025	Archin-Absher complex, 2 to 8 percent slopes	0.000	0.000	0.497	0.000	0.000	0.529	0.000	0.000	0.000
Steele City	MT	Fallon	266.445	266.632	0.187	MT025	Chinook-Assinniboine complex, 2 to 8 percent slopes	0.000	0.000	0.011	0.187	0.000	0.187	0.000	0.000	0.000
Steele City	MT	Fallon	266.632	266.808	0.176	MT025	Busby-Blacksheep-Twilight fine sandy loams, 8 to 25 percent slopes	0.000	0.169	0.037	0.000	0.000	0.176	0.000	0.000	0.000
Steele City	MT	Fallon	266.808	267.106	0.298	MT025	Chinook-Archin complex, 2 to 8 percent slopes	0.000	0.000	0.137	0.000	0.000	0.298	0.000	0.000	0.000
Steele City	MT	Fallon	267.106	267.227	0.121	MT025	Archin, gullied-Delpoint complex, 4 to 15 percent slopes	0.000	0.059	0.117	0.000	0.000	0.121	0.000	0.000	0.000
Steele City	MT	Fallon	267.227	267.377	0.150	MT025	Busby-Blacksheep-Twilight fine sandy loams, 8 to 25 percent slopes	0.000	0.144	0.032	0.000	0.000	0.150	0.000	0.000	0.000
Steele City	MT	Fallon	267.377	267.602	0.225	MT025	Chinook sandy loam, 2 to 8 percent slopes	0.000	0.000	0.011	0.225	0.000	0.225	0.002	0.000	0.002
Steele City	MT	Fallon	267.602	267.923	0.321	MT025	Busby-Blacksheep-Twilight fine sandy loams, 8 to 25 percent slopes	0.000	0.308	0.067	0.000	0.000	0.321	0.000	0.000	0.000
Steele City	MT	Fallon	267.923	268.012	0.089	MT025	Chinook sandy loam, 2 to 8 percent slopes	0.000	0.000	0.004	0.089	0.000	0.089	0.001	0.000	0.001
Steele City	MT	Fallon	268.012	268.681	0.669	MT025	Archin-Absher complex, 2 to 8 percent slopes	0.000	0.000	0.629	0.000	0.000	0.669	0.000	0.000	0.000
Steele City	MT	Fallon	268.681	268.710	0.030	MT025	Lonna-Cambeth silt loams, 2 to 8 percent slopes	0.000	0.001	0.030	0.030	0.000	0.030	0.000	0.000	0.000
Steele City	MT	Fallon	268.710	268.928	0.217	MT025	Busby-Blacksheep-Twilight fine sandy loams, 8 to 25 percent slopes	0.000	0.209	0.046	0.000	0.000	0.217	0.000	0.000	0.000
Steele City	MT	Fallon	268.928	269.123	0.196	MT025	Chinook-Archin complex, 2 to 8 percent slopes	0.000	0.000	0.090	0.000	0.000	0.196	0.000	0.000	0.000
Steele City	MT	Fallon	269.123	269.168	0.045	MT025	Archin-Absher complex, 2 to 8 percent slopes	0.000	0.000	0.042	0.000	0.000	0.045	0.000	0.000	0.000
Steele City	MT	Fallon	269.168	269.183	0.016	MT025	Chinook-Archin complex, 2 to 8 percent slopes	0.000	0.000	0.007	0.000	0.000	0.016	0.000	0.000	0.000
Steele City	MT	Fallon	269.183	269.283	0.100	MT025	Blacksheep-Twilight fine sandy loams, 15 to 45 percent slopes	0.000	0.094	0.046	0.000	0.000	0.100	0.000	0.000	0.000

Appendix K – Soils by Milepost – Steele City Segment

Pipeline Segment	State	County	Beginning Milepost	Ending Milepost	Miles	Soil Series	Soil Series Name	Wind (miles)	Water (miles)	Low revegetation on Potential (miles)	Prime Farmland (miles)	Hydric Soils (miles)	Compaction on Prone (miles)	Stoney – Rocky (miles)	Shallow Bedrock (miles)	Droghty (miles)
Steele City	MT	Fallon	269.283	269.374	0.091	MT025	Busby-Blacksheep-Twilight fine sandy loams, 8 to 25 percent slopes	0.000	0.087	0.019	0.000	0.000	0.091	0.000	0.000	0.000
Steele City	MT	Fallon	269.374	269.377	0.003	MT025	Busby fine sandy loam, 2 to 8 percent slopes	0.000	0.000	0.000	0.003	0.000	0.003	0.000	0.000	0.000
Steele City	MT	Fallon	269.377	269.388	0.011	MT025	Busby-Blacksheep-Twilight fine sandy loams, 8 to 25 percent slopes	0.000	0.010	0.002	0.000	0.000	0.011	0.000	0.000	0.000
Steele City	MT	Fallon	269.388	269.499	0.112	MT025	Busby fine sandy loam, 2 to 8 percent slopes	0.000	0.003	0.010	0.112	0.000	0.112	0.000	0.000	0.000
Steele City	MT	Fallon	269.499	269.580	0.081	MT025	Busby fine sandy loam, 8 to 15 percent slopes	0.000	0.074	0.008	0.081	0.000	0.081	0.000	0.000	0.000
Steele City	MT	Fallon	269.580	269.597	0.017	MT025	Archin-Ynot complex, 2 to 8 percent slopes	0.000	0.000	0.009	0.000	0.000	0.017	0.000	0.000	0.000
Steele City	MT	Fallon	269.597	269.650	0.053	MT025	Busby fine sandy loam, 8 to 15 percent slopes	0.000	0.049	0.005	0.053	0.000	0.053	0.000	0.000	0.000
Steele City	MT	Fallon	269.650	269.685	0.036	MT025	Archin-Ynot complex, 2 to 8 percent slopes	0.000	0.000	0.019	0.000	0.000	0.036	0.000	0.000	0.000
Steele City	MT	Fallon	269.685	269.790	0.104	MT025	Busby-Blacksheep-Twilight fine sandy loams, 8 to 25 percent slopes	0.000	0.100	0.022	0.000	0.000	0.104	0.000	0.000	0.000
Steele City	MT	Fallon	269.790	269.966	0.176	MT025	Busby fine sandy loam, 2 to 8 percent slopes	0.000	0.005	0.016	0.176	0.000	0.176	0.000	0.000	0.000
Steele City	MT	Fallon	269.966	270.008	0.042	MT025	Yawdim-Blacksheep-Rock outcrop complex, 15 to 45 percent slopes	0.000	0.032	0.003	0.000	0.000	0.042	0.000	0.000	0.000
Steele City	MT	Fallon	270.008	270.057	0.050	MT025	Blacksheep-Twilight fine sandy loams, 15 to 45 percent slopes	0.000	0.047	0.023	0.000	0.000	0.050	0.000	0.000	0.000
Steele City	MT	Fallon	270.057	270.139	0.081	MT025	Archin-Absher complex, 2 to 8 percent slopes	0.000	0.000	0.076	0.000	0.000	0.081	0.000	0.000	0.000
Steele City	MT	Fallon	270.139	270.216	0.078	MT025	Archin loam, 2 to 8 percent slopes	0.000	0.000	0.073	0.000	0.000	0.078	0.000	0.000	0.000
Steele City	MT	Fallon	270.216	270.249	0.033	MT025	Archin-Absher complex, 2 to 8 percent slopes	0.000	0.000	0.031	0.000	0.000	0.033	0.000	0.000	0.000
Steele City	MT	Fallon	270.249	270.363	0.114	MT025	Archin loam, 2 to 8 percent slopes	0.000	0.000	0.108	0.000	0.000	0.114	0.000	0.000	0.000
Steele City	MT	Fallon	270.363	270.445	0.081	MT025	Ynot sandy loam, 8 to 15 percent slopes	0.000	0.010	0.007	0.081	0.000	0.081	0.000	0.000	0.000
Steele City	MT	Fallon	270.445	270.631	0.186	MT025	Busby-Blacksheep-Twilight fine sandy loams, 8 to 25 percent slopes	0.000	0.179	0.039	0.000	0.000	0.186	0.000	0.000	0.000
Steele City	MT	Fallon	270.631	270.735	0.104	MT025	Chinook-Archin complex, 2 to 8 percent slopes	0.000	0.000	0.048	0.000	0.000	0.104	0.000	0.000	0.000
Steele City	MT	Fallon	270.735	270.836	0.101	MT025	Twilight-Delpoint complex, 2 to 8 percent slopes	0.000	0.000	0.097	0.000	0.000	0.101	0.000	0.000	0.000
Steele City	MT	Fallon	270.836	270.899	0.064	MT025	Busby-Blacksheep-Twilight fine sandy loams, 8 to 25 percent slopes	0.000	0.061	0.013	0.000	0.000	0.064	0.000	0.000	0.000
Steele City	MT	Fallon	270.899	271.007	0.107	MT025	Chinook-Archin complex, 2 to 8 percent slopes	0.000	0.000	0.049	0.000	0.000	0.107	0.000	0.000	0.000
Steele City	MT	Fallon	271.007	271.453	0.446	MT025	Chinook sandy loam, 2 to 8 percent slopes	0.000	0.000	0.022	0.446	0.000	0.446	0.004	0.000	0.004
Steele City	MT	Fallon	271.453	271.544	0.091	MT025	Chinook-Archin complex, 2 to 8 percent slopes	0.000	0.000	0.042	0.000	0.000	0.091	0.000	0.000	0.000
Steele City	MT	Fallon	271.544	271.620	0.076	MT025	Badland	0.000	0.011	0.011	0.000	0.000	0.076	0.000	0.000	0.000
Steele City	MT	Fallon	271.620	271.738	0.119	MT025	Chinook-Archin complex, 2 to 8 percent slopes	0.000	0.000	0.055	0.000	0.000	0.119	0.000	0.000	0.000
Steele City	MT	Fallon	271.738	271.824	0.086	MT025	Chinook sandy loam, 2 to 8 percent slopes	0.000	0.000	0.004	0.086	0.000	0.086	0.001	0.000	0.001
Steele City	MT	Fallon	271.824	271.969	0.144	MT025	Busby, gullied-Delpoint-Yawdim complex, 8 to 25 percent slopes	0.000	0.138	0.061	0.000	0.001	0.144	0.000	0.000	0.000
Steele City	MT	Fallon	271.969	271.999	0.030	MT025	Twilight fine sandy loam, 2 to 8 percent slopes	0.000	0.000	0.027	0.030	0.000	0.030	0.000	0.000	0.000
Steele City	MT	Fallon	271.999	272.197	0.198	MT025	Blacksheep-Twilight fine sandy loams, 8 to 15 percent slopes	0.000	0.014	0.101	0.000	0.000	0.198	0.000	0.000	0.000
Steele City	MT	Fallon	272.197	272.299	0.102	MT025	Chinook-Archin complex, 2 to 8 percent slopes	0.000	0.000	0.047	0.000	0.000	0.102	0.000	0.000	0.000
Steele City	MT	Fallon	272.299	272.484	0.185	MT025	Chinook sandy loam, 2 to 8 percent slopes	0.000	0.000	0.009	0.185	0.000	0.185	0.002	0.000	0.002
Steele City	MT	Fallon	272.484	272.617	0.133	MT025	Chinook-Archin complex, 2 to 8 percent slopes	0.000	0.000	0.061	0.000	0.000	0.133	0.000	0.000	0.000
Steele City	MT	Fallon	272.617	272.744	0.127	MT025	Archin loam, 2 to 8 percent slopes	0.000	0.000	0.120	0.000	0.000	0.127	0.000	0.000	0.000
Steele City	MT	Fallon	272.744	272.848	0.104	MT025	Gerdrum-Absher complex, 2 to 8 percent slopes	0.000	0.000	0.103	0.000	0.000	0.104	0.000	0.000	0.000
Steele City	MT	Fallon	272.848	272.906	0.058	MT025	Twilight-Cabbart complex, 8 to 15 percent slopes	0.000	0.026	0.055	0.000	0.000	0.058	0.000	0.000	0.000

Appendix K – Soils by Milepost – Steele City Segment

Pipeline Segment	State	County	Beginning Milepost	Ending Milepost	Miles	Soil Series	Soil Series Name	Wind (miles)	Water (miles)	Low revegetation on Potential (miles)	Prime Farmland (miles)	Hydric Soils (miles)	Compaction on Prone (miles)	Stoney – Rocky (miles)	Shallow Bedrock (miles)	Droghty (miles)
Steele City	MT	Fallon	272.906	273.048	0.142	MT025	Ynot sandy loam, 8 to 15 percent slopes	0.000	0.017	0.011	0.142	0.000	0.142	0.000	0.000	0.000
Steele City	MT	Fallon	273.048	273.108	0.060	MT025	Assinniboine-Ynot complex, 2 to 8 percent slopes	0.000	0.001	0.004	0.060	0.000	0.060	0.000	0.000	0.000
Steele City	MT	Fallon	273.108	273.183	0.075	MT025	Twilight-Cabbart complex, 8 to 15 percent slopes	0.000	0.034	0.071	0.000	0.000	0.075	0.000	0.000	0.000
Steele City	MT	Fallon	273.183	273.289	0.106	MT025	Gerdrum-Absher complex, 2 to 8 percent slopes	0.000	0.000	0.105	0.000	0.000	0.106	0.000	0.000	0.000
Steele City	MT	Fallon	273.289	273.386	0.097	MT025	Eapa loam, 2 to 8 percent slopes	0.000	0.003	0.014	0.097	0.000	0.097	0.000	0.000	0.000
Steele City	MT	Fallon	273.386	273.466	0.080	MT025	Creed-Gerdrum complex, 2 to 8 percent slopes	0.000	0.000	0.078	0.000	0.000	0.080	0.000	0.000	0.000
Steele City	MT	Fallon	273.466	273.496	0.030	MT025	Archin loam, 2 to 8 percent slopes	0.000	0.000	0.029	0.000	0.000	0.030	0.000	0.000	0.000
Steele City	MT	Fallon	273.496	273.707	0.211	MT025	Cambeth-Cabbart silt loams, 2 to 8 percent slopes	0.000	0.004	0.205	0.000	0.000	0.211	0.000	0.000	0.000
Steele City	MT	Fallon	273.707	273.793	0.086	MT025	Eapa loam, 2 to 8 percent slopes	0.000	0.003	0.012	0.086	0.000	0.086	0.000	0.000	0.000
Steele City	MT	Fallon	273.793	273.854	0.062	MT025	Cambeth-Cabbart silt loams, 2 to 8 percent slopes	0.000	0.001	0.060	0.000	0.000	0.062	0.000	0.000	0.000
Steele City	MT	Fallon	273.854	273.877	0.023	MT025	Eapa loam, 2 to 8 percent slopes	0.000	0.001	0.003	0.023	0.000	0.023	0.000	0.000	0.000
Steele City	MT	Fallon	273.877	273.949	0.071	MT025	Cambeth-Cabbart silt loams, 2 to 8 percent slopes	0.000	0.001	0.069	0.000	0.000	0.071	0.000	0.000	0.000
Steele City	MT	Fallon	273.949	273.990	0.041	MT025	Eapa loam, 2 to 8 percent slopes	0.000	0.001	0.006	0.041	0.000	0.041	0.000	0.000	0.000
Steele City	MT	Fallon	273.990	274.038	0.048	MT025	Cambeth-Cabbart silt loams, 2 to 8 percent slopes	0.000	0.001	0.046	0.000	0.000	0.048	0.000	0.000	0.000
Steele City	MT	Fallon	274.038	274.104	0.067	MT025	Eapa loam, 2 to 8 percent slopes	0.000	0.002	0.009	0.067	0.000	0.067	0.000	0.000	0.000
Steele City	MT	Fallon	274.104	274.424	0.320	MT025	Bonfri-Cabbart loams, 8 to 15 percent slopes	0.000	0.301	0.307	0.000	0.000	0.320	0.000	0.000	0.000
Steele City	MT	Fallon	274.424	274.539	0.115	MT025	Tanna-Ethridge silty clay loams, 2 to 8 percent slopes	0.000	0.000	0.063	0.115	0.000	0.115	0.000	0.000	0.000
Steele City	MT	Fallon	274.539	274.739	0.200	MT025	Creed-Gerdrum complex, 2 to 8 percent slopes	0.000	0.000	0.196	0.000	0.000	0.200	0.000	0.000	0.000
Steele City	MT	Fallon	274.739	274.798	0.059	MT025	Archin-Absher complex, 2 to 8 percent slopes	0.000	0.000	0.056	0.000	0.000	0.059	0.000	0.000	0.000
Steele City	MT	Fallon	274.798	274.891	0.093	MT025	Chinook-Archin complex, 2 to 8 percent slopes	0.000	0.000	0.043	0.000	0.000	0.093	0.000	0.000	0.000
Steele City	MT	Fallon	274.891	274.939	0.048	MT025	Archin-Absher complex, 2 to 8 percent slopes	0.000	0.000	0.045	0.000	0.000	0.048	0.000	0.000	0.000
Steele City	MT	Fallon	274.939	275.006	0.067	MT025	Yamacall-Cabbart loams, 15 to 35 percent slopes	0.000	0.063	0.063	0.000	0.001	0.067	0.000	0.000	0.000
Steele City	MT	Fallon	275.006	275.027	0.021	MT025	Creed-Gerdrum complex, 2 to 8 percent slopes	0.000	0.000	0.020	0.000	0.000	0.021	0.000	0.000	0.000
Steele City	MT	Fallon	275.027	275.055	0.029	MT025	Eapa loam, 2 to 8 percent slopes	0.000	0.001	0.004	0.029	0.000	0.029	0.000	0.000	0.000
Steele City	MT	Fallon	275.055	275.139	0.084	MT025	Creed-Gerdrum complex, 2 to 8 percent slopes	0.000	0.000	0.082	0.000	0.000	0.084	0.000	0.000	0.000
Steele City	MT	Fallon	275.139	275.158	0.018	MT025	Yamacall-Cabbart loams, 15 to 35 percent slopes	0.000	0.017	0.017	0.000	0.000	0.018	0.000	0.000	0.000
Steele City	MT	Fallon	275.158	275.245	0.088	MT025	Carfall-Assinniboine complex, 2 to 8 percent slopes	0.000	0.000	0.010	0.088	0.000	0.088	0.000	0.000	0.000
Steele City	MT	Fallon	275.245	275.431	0.185	MT025	Creed-Gerdrum complex, 2 to 8 percent slopes	0.000	0.000	0.182	0.000	0.000	0.185	0.000	0.000	0.000
Steele City	MT	Fallon	275.431	275.962	0.532	MT025	Yamacall-Cabbart loams, 15 to 35 percent slopes	0.000	0.494	0.500	0.000	0.005	0.532	0.000	0.000	0.000
Steele City	MT	Fallon	275.962	276.046	0.083	MT025	Creed-Gerdrum complex, 2 to 8 percent slopes	0.000	0.000	0.082	0.000	0.000	0.083	0.000	0.000	0.000
Steele City	MT	Fallon	276.046	276.134	0.089	MT025	Yamacall-Cabbart loams, 15 to 35 percent slopes	0.000	0.082	0.083	0.000	0.001	0.089	0.000	0.000	0.000
Steele City	MT	Fallon	276.134	276.767	0.632	MT025	Gerdrum-Absher complex, 2 to 8 percent slopes	0.000	0.000	0.626	0.000	0.000	0.632	0.000	0.000	0.000
Steele City	MT	Fallon	276.767	276.808	0.042	MT025	Creed-Gerdrum complex, 2 to 8 percent slopes	0.000	0.000	0.041	0.000	0.000	0.042	0.000	0.000	0.000
Steele City	MT	Fallon	276.808	277.385	0.577	MT025	Archin-Ynot complex, 2 to 8 percent slopes	0.000	0.000	0.312	0.000	0.000	0.577	0.000	0.000	0.000
Steele City	MT	Fallon	277.385	277.443	0.057	MT025	Ynot sandy loam, 2 to 8 percent slopes	0.000	0.000	0.002	0.057	0.000	0.057	0.000	0.000	0.000
Steele City	MT	Fallon	277.443	277.742	0.300	MT025	Archin-Ynot complex, 2 to 8 percent slopes	0.000	0.000	0.162	0.000	0.000	0.300	0.000	0.000	0.000
Steele City	MT	Fallon	277.742	278.116	0.374	MT025	Archin-Absher complex, 0 to 2 percent slopes	0.000	0.000	0.363	0.000	0.000	0.374	0.000	0.000	0.000
Steele City	MT	Fallon	278.116	278.417	0.301	MT025	Archin-Ynot complex, 2 to 8 percent slopes	0.000	0.000	0.162	0.000	0.000	0.301	0.000	0.000	0.000
Steele City	MT	Fallon	278.417	278.562	0.145	MT025	Archin-Absher complex, 0 to 2 percent slopes	0.000	0.000	0.141	0.000	0.000	0.145	0.000	0.000	0.000
Steele City	MT	Fallon	278.562	278.565	0.003	MT025	Archin-Ynot complex, 2 to 8 percent slopes	0.000	0.000	0.002	0.000	0.000	0.003	0.000	0.000	0.000
Steele City	MT	Fallon	278.565	278.831	0.266	MT025	Archin-Absher complex, 0 to 2 percent slopes	0.000	0.000	0.258	0.000	0.000	0.266	0.000	0.000	0.000
Steele City	MT	Fallon	278.831	278.956	0.125	MT025	Gerdrum-Absher complex, 0 to 2 percent slopes	0.000	0.000	0.124	0.000	0.000	0.125	0.000	0.000	0.000
Steele City	MT	Fallon	278.956	279.153	0.197	MT025	Busby, gullied-Delpoint-Yawdim complex, 8 to 25 percent slopes	0.000	0.189	0.083	0.000	0.002	0.197	0.000	0.000	0.000

Appendix K – Soils by Milepost – Steele City Segment

Pipeline Segment	State	County	Beginning Milepost	Ending Milepost	Miles	Soil Series	Soil Series Name	Wind (miles)	Water (miles)	Low revegetation on Potential (miles)	Prime Farmland (miles)	Hydric Soils (miles)	Compaction on Prone (miles)	Stoney – Rocky (miles)	Shallow Bedrock (miles)	Droghty (miles)
Steele City	MT	Fallon	279.153	279.184	0.031	MT025	Archin loam, 2 to 8 percent slopes	0.000	0.000	0.029	0.000	0.000	0.031	0.000	0.000	0.000
Steele City	MT	Fallon	279.184	279.353	0.170	MT025	Creed-Gerdrum complex, 2 to 8 percent slopes	0.000	0.000	0.166	0.000	0.000	0.170	0.000	0.000	0.000
Steele City	MT	Fallon	279.353	279.397	0.044	MT025	Archin loam, 2 to 8 percent slopes	0.000	0.000	0.041	0.000	0.000	0.044	0.000	0.000	0.000
Steele City	MT	Fallon	279.397	279.492	0.095	MT025	Eapa-Yamacall loams, 2 to 8 percent slopes	0.000	0.003	0.052	0.000	0.000	0.095	0.000	0.000	0.000
Steele City	MT	Fallon	279.492	279.568	0.076	MT025	Bonfri-Parchin complex, 2 to 8 percent slopes	0.000	0.001	0.074	0.000	0.000	0.076	0.000	0.000	0.000
Steele City	MT	Fallon	279.568	279.664	0.096	MT025	Eapa-Yamacall loams, 2 to 8 percent slopes	0.000	0.003	0.053	0.000	0.000	0.096	0.000	0.000	0.000
Steele City	MT	Fallon	279.664	279.796	0.132	MT025	Bonfri-Parchin complex, 2 to 8 percent slopes	0.000	0.001	0.129	0.000	0.000	0.132	0.000	0.000	0.000
Steele City	MT	Fallon	279.796	280.007	0.211	MT025	Archin loam, 2 to 8 percent slopes	0.000	0.000	0.198	0.000	0.000	0.211	0.000	0.000	0.000
Steele City	MT	Fallon	280.007	280.038	0.032	MT025	Archin-Absher complex, 2 to 8 percent slopes	0.000	0.000	0.030	0.000	0.000	0.032	0.000	0.000	0.000
Steele City	MT	Fallon	280.038	280.222	0.184	MT025	Archin loam, 2 to 8 percent slopes	0.000	0.000	0.173	0.000	0.000	0.184	0.000	0.000	0.000
Steele City	MT	Fallon	280.222	280.272	0.050	MT025	Archin-Absher complex, 2 to 8 percent slopes	0.000	0.000	0.047	0.000	0.000	0.050	0.000	0.000	0.000
Steele City	MT	Fallon	280.272	280.451	0.179	MT025	Delpoint-Cabbart complex, 8 to 15 percent slopes	0.000	0.173	0.168	0.000	0.000	0.179	0.000	0.000	0.000
Steele City	MT	Fallon	280.451	280.561	0.111	MT025	Archin-Absher complex, 2 to 8 percent slopes	0.000	0.000	0.104	0.000	0.000	0.111	0.000	0.000	0.000
Steele City	MT	Fallon	280.561	280.802	0.241	MT025	Creed-Gerdrum complex, 2 to 8 percent slopes	0.000	0.000	0.236	0.000	0.000	0.241	0.000	0.000	0.000
Steele City	MT	Fallon	280.802	280.862	0.060	MT025	Yamacall-Cabbart loams, 15 to 35 percent slopes	0.000	0.056	0.056	0.000	0.001	0.060	0.000	0.000	0.000
Steele City	MT	Fallon	280.862	280.941	0.078	MT025	Archin loam, 2 to 8 percent slopes	0.000	0.000	0.074	0.000	0.000	0.078	0.000	0.000	0.000
Steele City	MT	Fallon	280.941	280.996	0.055	MT025	Assinniboine sandy clay loam, 0 to 2 percent slopes	0.000	0.000	0.008	0.055	0.000	0.055	0.000	0.000	0.000
Steele City	MT	Fallon	280.996	281.075	0.079	MT025	Archin loam, 2 to 8 percent slopes	0.000	0.000	0.075	0.000	0.000	0.079	0.000	0.000	0.000
Steele City	MT	Fallon	281.075	281.184	0.109	MT025	Glendive sandy loam, 0 to 2 percent slopes	0.000	0.000	0.096	0.109	0.003	0.109	0.000	0.000	0.007
Steele City	MT	Fallon	281.184	281.196	0.012	MT025	Water	0.000	0.000	0.000	0.000	0.000	0.012	0.000	0.000	0.000
Steele City	MT	Fallon	281.196	281.238	0.042	MT025	Glendive sandy loam, 0 to 2 percent slopes	0.000	0.000	0.037	0.042	0.001	0.042	0.000	0.000	0.003
Steele City	MT	Fallon	281.238	281.622	0.384	MT025	Eapa-Yamacall loams, 2 to 8 percent slopes	0.000	0.012	0.211	0.000	0.000	0.384	0.000	0.000	0.000
Steele City	MT	Fallon	281.622	281.740	0.118	MT025	Yamacall-Cabbart loams, 15 to 35 percent slopes	0.000	0.110	0.111	0.000	0.001	0.118	0.000	0.000	0.000
Steele City	MT	Fallon	281.740	281.830	0.090	MT025	Parchin-Bullock complex, 2 to 8 percent slopes	0.000	0.003	0.087	0.000	0.000	0.090	0.000	0.000	0.000
Steele City	MT	Fallon	281.830	281.936	0.107	MT025	Archin loam, 2 to 8 percent slopes	0.000	0.000	0.100	0.000	0.000	0.107	0.000	0.000	0.000
Steele City	MT	Fallon	281.936	282.163	0.227	MT025	Bonfri-Parchin complex, 2 to 8 percent slopes	0.000	0.002	0.222	0.000	0.000	0.227	0.000	0.000	0.000
Steele City	MT	Fallon	282.163	282.225	0.061	MT025	Parchin-Bullock complex, 2 to 8 percent slopes	0.000	0.002	0.060	0.000	0.000	0.061	0.000	0.000	0.000
Steele City	MT	Fallon	282.225	282.278	0.053	MT025	Twilight-Bonfri complex, 2 to 8 percent slopes	0.000	0.000	0.050	0.053	0.000	0.053	0.000	0.000	0.000
Steele City	MT	Harding	282.278	282.306	0.028	SD063	Twilight-Parchin fine sandy loams, 6 to 15 percent slopes	0.000	0.011	0.010	0.000	0.000	0.028	0.000	0.000	0.024
Steele City	MT	Harding	282.306	282.479	0.173	SD063	Bullock-Parchin-Slickspots complex, 2 to 9 percent slopes	0.000	0.005	0.138	0.000	0.000	0.173	0.000	0.000	0.067
Steele City	MT	Harding	282.479	282.569	0.090	SD063	Parchin-Bullock fine sandy loams, 2 to 9 percent slopes	0.000	0.014	0.078	0.000	0.000	0.090	0.000	0.000	0.048
Steele City	MT	Harding	282.569	282.727	0.158	SD063	Rhame-Parchin fine sandy loams, 2 to 6 percent slopes	0.000	0.016	0.071	0.000	0.000	0.158	0.000	0.000	0.040
Steele City	MT	Harding	282.727	282.796	0.069	SD063	Parchin-Bullock fine sandy loams, 2 to 9 percent slopes	0.000	0.010	0.059	0.000	0.000	0.069	0.000	0.000	0.036
Steele City	MT	Harding	282.796	282.872	0.077	SD063	Rhame-Parchin fine sandy loams, 2 to 6 percent slopes	0.000	0.008	0.034	0.000	0.000	0.077	0.000	0.000	0.019
Steele City	MT	Harding	282.872	283.363	0.491	SD063	Twilight-Parchin fine sandy loams, 6 to 15 percent slopes	0.000	0.196	0.172	0.000	0.000	0.491	0.000	0.000	0.417
Steele City	MT	Harding	283.363	283.572	0.209	SD063	Cabbart-Rock outcrop complex, 15 to 40 percent slopes	0.000	0.198	0.017	0.000	0.000	0.209	0.058	0.052	0.000
Steele City	MT	Harding	283.572	283.799	0.228	SD063	Twilight-Parchin fine sandy loams, 6 to 15 percent	0.000	0.091	0.080	0.000	0.000	0.228	0.000	0.000	0.193

Appendix K – Soils by Milepost – Steele City Segment

Pipeline Segment	State	County	Beginning Milepost	Ending Milepost	Miles	Soil Series	Soil Series Name	Wind (miles)	Water (miles)	Low revegetation on Potential (miles)	Prime Farmland (miles)	Hydric Soils (miles)	Compaction on Prone (miles)	Stoney – Rocky (miles)	Shallow Bedrock (miles)	Droghty (miles)
							slopes									
Steele City	MT	Harding	283.799	283.958	0.159	SD063	Bullock-Parchin-Slickspots complex, 2 to 9 percent slopes	0.000	0.005	0.127	0.000	0.000	0.159	0.000	0.000	0.062
Steele City	MT	Harding	283.958	284.348	0.390	SD063	Badlands	0.000	0.371	0.051	0.000	0.000	0.390	0.347	0.000	0.000
Steele City	MT	Harding	284.348	284.704	0.356	SD063	Bullock-Parchin-Slickspots complex, 2 to 9 percent slopes	0.000	0.011	0.285	0.000	0.000	0.356	0.000	0.000	0.139
Steele City	MT	Harding	284.704	284.725	0.021	SD063	Cabbart-Delridge loams, 15 to 40 percent slopes	0.000	0.019	0.002	0.000	0.000	0.021	0.001	0.000	0.001
Steele City	MT	Harding	284.725	284.819	0.094	SD063	Bullock-Parchin-Slickspots complex, 2 to 9 percent slopes	0.000	0.003	0.075	0.000	0.000	0.094	0.000	0.000	0.037
Steele City	MT	Harding	284.819	284.868	0.049	SD063	Cabbart-Delridge loams, 15 to 40 percent slopes	0.000	0.045	0.004	0.000	0.000	0.049	0.001	0.000	0.001
Steele City	MT	Harding	284.868	284.954	0.086	SD063	Bullock-Parchin-Slickspots complex, 2 to 9 percent slopes	0.000	0.003	0.069	0.000	0.000	0.086	0.000	0.000	0.034
Steele City	MT	Harding	284.954	284.980	0.027	SD063	Parchin-Bullock fine sandy loams, 2 to 9 percent slopes	0.000	0.004	0.023	0.000	0.000	0.027	0.000	0.000	0.014
Steele City	MT	Harding	284.980	285.335	0.355	SD063	Bullock-Parchin-Slickspots complex, 2 to 9 percent slopes	0.000	0.011	0.284	0.000	0.000	0.355	0.000	0.000	0.138
Steele City	MT	Harding	285.335	285.440	0.105	SD063	Parchin-Bullock fine sandy loams, 2 to 9 percent slopes	0.000	0.016	0.091	0.000	0.000	0.105	0.000	0.000	0.056
Steele City	MT	Harding	285.440	285.502	0.061	SD063	Twilight-Parchin fine sandy loams, 6 to 15 percent slopes	0.000	0.024	0.021	0.000	0.000	0.061	0.000	0.000	0.052
Steele City	MT	Harding	285.502	285.523	0.022	SD063	Bullock-Parchin-Slickspots complex, 2 to 9 percent slopes	0.000	0.001	0.017	0.000	0.000	0.022	0.000	0.000	0.008
Steele City	MT	Harding	285.523	285.589	0.066	SD063	Twilight-Parchin fine sandy loams, 6 to 15 percent slopes	0.000	0.026	0.023	0.000	0.000	0.066	0.000	0.000	0.056
Steele City	MT	Harding	285.589	285.975	0.386	SD063	Bullock-Parchin-Slickspots complex, 2 to 9 percent slopes	0.000	0.012	0.308	0.000	0.000	0.386	0.000	0.000	0.150
Steele City	MT	Harding	285.975	286.036	0.061	SD063	Parchin-Bullock fine sandy loams, 2 to 9 percent slopes	0.000	0.009	0.052	0.000	0.000	0.061	0.000	0.000	0.032
Steele City	MT	Harding	286.036	286.083	0.048	SD063	Bullock-Parchin-Slickspots complex, 2 to 9 percent slopes	0.000	0.001	0.038	0.000	0.000	0.048	0.000	0.000	0.019
Steele City	MT	Harding	286.083	286.106	0.022	SD063	Parchin-Bullock fine sandy loams, 2 to 9 percent slopes	0.000	0.003	0.019	0.000	0.000	0.022	0.000	0.000	0.012
Steele City	MT	Harding	286.106	286.224	0.118	SD063	Bullock-Parchin-Slickspots complex, 2 to 9 percent slopes	0.000	0.004	0.094	0.000	0.000	0.118	0.000	0.000	0.046
Steele City	MT	Harding	286.224	286.303	0.080	SD063	Parchin-Bullock fine sandy loams, 2 to 9 percent slopes	0.000	0.012	0.069	0.000	0.000	0.080	0.000	0.000	0.042
Steele City	MT	Harding	286.303	286.478	0.175	SD063	Bullock-Parchin-Slickspots complex, 2 to 9 percent slopes	0.000	0.005	0.140	0.000	0.000	0.175	0.000	0.000	0.068
Steele City	MT	Harding	286.478	286.636	0.158	SD063	Kirby-Cabbart-Rock outcrop complex, 15 to 60 percent slopes	0.000	0.142	0.016	0.000	0.000	0.158	0.079	0.032	0.016
Steele City	MT	Harding	286.636	286.754	0.118	SD063	Parchin-Bullock fine sandy loams, 2 to 9 percent slopes	0.000	0.018	0.102	0.000	0.000	0.118	0.000	0.000	0.063
Steele City	MT	Harding	286.754	286.843	0.089	SD063	Kirby-Cabbart-Rock outcrop complex, 15 to 60 percent slopes	0.000	0.080	0.009	0.000	0.000	0.089	0.044	0.018	0.009
Steele City	MT	Harding	286.843	286.944	0.101	SD063	Twilight-Parchin fine sandy loams, 6 to 15 percent slopes	0.000	0.041	0.035	0.000	0.000	0.101	0.000	0.000	0.086

Appendix K – Soils by Milepost – Steele City Segment

Pipeline Segment	State	County	Beginning Milepost	Ending Milepost	Miles	Soil Series	Soil Series Name	Wind (miles)	Water (miles)	Low revegetation on Potential (miles)	Prime Farmland (miles)	Hydric Soils (miles)	Compaction on Prone (miles)	Stoney – Rocky (miles)	Shallow Bedrock (miles)	Droghty (miles)
Steele City	MT	Harding	286.944	287.039	0.095	SD063	Kirby-Cabbart-Rock outcrop complex, 15 to 60 percent slopes	0.000	0.085	0.009	0.000	0.000	0.095	0.047	0.019	0.009
Steele City	MT	Harding	287.039	287.401	0.363	SD063	Twilight-Blackhall fine sandy loams, 9 to 25 percent slopes	0.000	0.145	0.127	0.000	0.000	0.363	0.000	0.000	0.236
Steele City	MT	Harding	287.401	287.471	0.070	SD063	Kirby-Cabbart-Rock outcrop complex, 15 to 60 percent slopes	0.000	0.063	0.007	0.000	0.000	0.070	0.035	0.014	0.007
Steele City	MT	Harding	287.471	287.514	0.043	SD063	Twilight-Blackhall fine sandy loams, 9 to 25 percent slopes	0.000	0.017	0.015	0.000	0.000	0.043	0.000	0.000	0.028
Steele City	MT	Harding	287.514	287.683	0.168	SD063	Parchin-Bullock fine sandy loams, 2 to 9 percent slopes	0.000	0.025	0.145	0.000	0.000	0.168	0.000	0.000	0.089
Steele City	MT	Harding	287.683	287.702	0.020	SD063	Bullock-Cabbart complex, 6 to 25 percent slopes	0.000	0.019	0.011	0.000	0.000	0.020	0.000	0.000	0.000
Steele City	MT	Harding	287.702	287.751	0.049	SD063	Parchin-Bullock fine sandy loams, 2 to 9 percent slopes	0.000	0.007	0.042	0.000	0.000	0.049	0.000	0.000	0.026
Steele City	MT	Harding	287.751	287.798	0.047	SD063	Bullock-Cabbart complex, 6 to 25 percent slopes	0.000	0.045	0.026	0.000	0.000	0.047	0.000	0.000	0.000
Steele City	MT	Harding	287.798	287.986	0.188	SD063	Parchin-Bullock fine sandy loams, 2 to 9 percent slopes	0.000	0.028	0.162	0.000	0.000	0.188	0.000	0.000	0.100
Steele City	MT	Harding	287.986	288.023	0.037	SD063	Bullock-Parchin-Slickspots complex, 2 to 9 percent slopes	0.000	0.001	0.030	0.000	0.000	0.037	0.000	0.000	0.015
Steele City	MT	Harding	288.023	288.135	0.112	SD063	Delridge-Cabbart loams, 6 to 15 percent slopes	0.000	0.105	0.011	0.000	0.000	0.112	0.000	0.000	0.008
Steele City	MT	Harding	288.135	288.203	0.068	SD063	Bullock-Cabbart complex, 6 to 25 percent slopes	0.000	0.064	0.038	0.000	0.000	0.068	0.000	0.000	0.000
Steele City	MT	Harding	288.203	288.423	0.220	SD063	Delridge-Cabbart loams, 6 to 15 percent slopes	0.000	0.207	0.022	0.000	0.000	0.220	0.000	0.000	0.015
Steele City	MT	Harding	288.423	288.508	0.085	SD063	Bullock-Cabbart complex, 6 to 25 percent slopes	0.000	0.081	0.048	0.000	0.000	0.085	0.000	0.000	0.000
Steele City	MT	Harding	288.508	288.713	0.205	SD063	Gerdrum silt loam, 0 to 4 percent slopes	0.000	0.000	0.205	0.000	0.000	0.205	0.000	0.000	0.000
Steele City	MT	Harding	288.713	288.743	0.030	SD063	Bullock-Cabbart complex, 6 to 25 percent slopes	0.000	0.028	0.017	0.000	0.000	0.030	0.000	0.000	0.000
Steele City	MT	Harding	288.743	288.817	0.075	SD063	Gerdrum silt loam, 0 to 4 percent slopes	0.000	0.000	0.075	0.000	0.000	0.075	0.000	0.000	0.000
Steele City	MT	Harding	288.817	288.927	0.110	SD063	Bullock-Cabbart complex, 6 to 25 percent slopes	0.000	0.105	0.062	0.000	0.000	0.110	0.000	0.000	0.000
Steele City	MT	Harding	288.927	289.041	0.114	SD063	Gerdrum silt loam, 0 to 4 percent slopes	0.000	0.000	0.114	0.000	0.000	0.114	0.000	0.000	0.000
Steele City	MT	Harding	289.041	289.201	0.160	SD063	Eapa-Archin complex, 0 to 3 percent slopes	0.000	0.000	0.150	0.000	0.000	0.160	0.000	0.000	0.010
Steele City	MT	Harding	289.201	289.258	0.057	SD063	Sage loam	0.000	0.000	0.057	0.000	0.048	0.057	0.000	0.000	0.000
Steele City	MT	Harding	289.258	289.432	0.174	SD063	Korchea loam, channeled	0.000	0.000	0.028	0.000	0.007	0.174	0.000	0.000	0.000
Steele City	MT	Harding	289.432	289.683	0.252	SD063	Cabbart-Rock outcrop complex, 15 to 40 percent slopes	0.000	0.239	0.020	0.000	0.000	0.252	0.070	0.063	0.000
Steele City	MT	Harding	289.683	289.715	0.032	SD063	Parchin-Bullock fine sandy loams, 2 to 9 percent slopes	0.000	0.005	0.027	0.000	0.000	0.032	0.000	0.000	0.017
Steele City	MT	Harding	289.715	289.733	0.018	SD063	Rhame-Parchin fine sandy loams, 2 to 6 percent slopes	0.000	0.002	0.008	0.000	0.000	0.018	0.000	0.000	0.005
Steele City	MT	Harding	289.733	289.784	0.051	SD063	Parchin-Bullock fine sandy loams, 2 to 9 percent slopes	0.000	0.008	0.044	0.000	0.000	0.051	0.000	0.000	0.027
Steele City	MT	Harding	289.784	289.965	0.181	SD063	Rhame-Parchin fine sandy loams, 2 to 6 percent slopes	0.000	0.018	0.082	0.000	0.000	0.181	0.000	0.000	0.045
Steele City	MT	Harding	289.965	290.435	0.470	SD063	Parchin-Bullock fine sandy loams, 2 to 9 percent slopes	0.000	0.070	0.404	0.000	0.000	0.470	0.000	0.000	0.249
Steele City	MT	Harding	290.435	290.514	0.079	SD063	Rhame-Parchin fine sandy loams, 2 to 6 percent slopes	0.000	0.008	0.036	0.000	0.000	0.079	0.000	0.000	0.020
Steele City	MT	Harding	290.514	290.667	0.153	SD063	Parchin-Bullock fine sandy loams, 2 to 9 percent	0.000	0.023	0.131	0.000	0.000	0.153	0.000	0.000	0.081

Appendix K – Soils by Milepost – Steele City Segment

Pipeline Segment	State	County	Beginning Milepost	Ending Milepost	Miles	Soil Series	Soil Series Name	Wind (miles)	Water (miles)	Low revegetation on Potential (miles)	Prime Farmland (miles)	Hydric Soils (miles)	Compaction on Prone (miles)	Stoney – Rocky (miles)	Shallow Bedrock (miles)	Droghty (miles)
							slopes									
Steele City	MT	Harding	290.667	290.691	0.024	SD063	Twilight-Parchin fine sandy loams, 6 to 15 percent slopes	0.000	0.009	0.008	0.000	0.000	0.024	0.000	0.000	0.020
Steele City	MT	Harding	290.691	290.791	0.100	SD063	Parchin-Bullock fine sandy loams, 2 to 9 percent slopes	0.000	0.015	0.086	0.000	0.000	0.100	0.000	0.000	0.053
Steele City	MT	Harding	290.791	290.947	0.156	SD063	Bullock-Parchin-Slickspots complex, 2 to 9 percent slopes	0.000	0.005	0.125	0.000	0.000	0.156	0.000	0.000	0.061
Steele City	MT	Harding	290.947	291.031	0.085	SD063	Twilight-Parchin fine sandy loams, 6 to 15 percent slopes	0.000	0.034	0.030	0.000	0.000	0.085	0.000	0.000	0.072
Steele City	MT	Harding	291.031	291.174	0.143	SD063	Bullock-Slickspots complex, 0 to 4 percent slopes	0.000	0.000	0.126	0.000	0.000	0.143	0.000	0.000	0.016
Steele City	MT	Harding	291.174	291.482	0.308	SD063	Gerdrum silt loam, 0 to 4 percent slopes	0.000	0.000	0.308	0.000	0.000	0.308	0.000	0.000	0.000
Steele City	MT	Harding	291.482	291.643	0.161	SD063	Havre loam	0.000	0.000	0.156	0.161	0.005	0.161	0.000	0.000	0.000
Steele City	MT	Harding	291.643	291.818	0.174	SD063	Glendive fine sandy loam	0.000	0.000	0.174	0.174	0.009	0.174	0.000	0.000	0.000
Steele City	MT	Harding	291.818	291.853	0.035	SD063	Water	0.000	0.000	0.000	0.000	0.000	0.035	0.000	0.000	0.000
Steele City	MT	Harding	291.853	291.882	0.030	SD063	Cabbart-Rock outcrop complex, 15 to 40 percent slopes	0.000	0.028	0.002	0.000	0.000	0.030	0.008	0.007	0.000
Steele City	MT	Harding	291.882	292.198	0.316	SD063	Havre-Harlake complex	0.000	0.000	0.297	0.313	0.028	0.316	0.000	0.000	0.000
Steele City	MT	Harding	292.198	292.220	0.022	SD063	Glendive fine sandy loam	0.000	0.000	0.022	0.022	0.001	0.022	0.000	0.000	0.000
Steele City	MT	Harding	292.220	292.343	0.123	SD063	Cabbart-Rock outcrop complex, 15 to 40 percent slopes	0.000	0.117	0.010	0.000	0.000	0.123	0.035	0.031	0.000
Steele City	MT	Harding	292.343	292.582	0.238	SD063	Parchin-Bullock fine sandy loams, 2 to 9 percent slopes	0.000	0.036	0.205	0.000	0.000	0.238	0.000	0.000	0.126
Steele City	MT	Harding	292.582	293.025	0.443	SD063	Twilight-Blackhall fine sandy loams, 9 to 25 percent slopes	0.000	0.177	0.155	0.000	0.000	0.443	0.000	0.000	0.288
Steele City	MT	Harding	293.025	293.080	0.055	SD063	Twilight fine sandy loam, 6 to 9 percent slopes	0.000	0.007	0.005	0.000	0.000	0.055	0.000	0.000	0.050
Steele City	MT	Harding	293.080	293.707	0.627	SD063	Twilight-Parchin fine sandy loams, 6 to 15 percent slopes	0.000	0.251	0.220	0.000	0.000	0.627	0.000	0.000	0.533
Steele City	MT	Harding	293.707	293.724	0.016	SD063	Cabbart-Rock outcrop complex, 15 to 40 percent slopes	0.000	0.015	0.001	0.000	0.000	0.016	0.005	0.004	0.000
Steele City	MT	Harding	293.724	293.770	0.046	SD063	Twilight-Parchin fine sandy loams, 6 to 15 percent slopes	0.000	0.018	0.016	0.000	0.000	0.046	0.000	0.000	0.039
Steele City	MT	Harding	293.770	293.873	0.103	SD063	Cabbart-Rock outcrop complex, 15 to 40 percent slopes	0.000	0.098	0.008	0.000	0.000	0.103	0.029	0.026	0.000
Steele City	MT	Harding	293.873	293.879	0.006	SD063	Parchin-Bullock fine sandy loams, 2 to 9 percent slopes	0.000	0.001	0.005	0.000	0.000	0.006	0.000	0.000	0.003
Steele City	MT	Harding	293.879	293.964	0.085	SD063	Bullock-Cabbart complex, 6 to 25 percent slopes	0.000	0.081	0.048	0.000	0.000	0.085	0.000	0.000	0.000
Steele City	MT	Harding	293.964	294.017	0.053	SD063	Parchin-Bullock fine sandy loams, 2 to 9 percent slopes	0.000	0.008	0.046	0.000	0.000	0.053	0.000	0.000	0.028
Steele City	MT	Harding	294.017	294.048	0.031	SD063	Bullock-Cabbart complex, 6 to 25 percent slopes	0.000	0.029	0.017	0.000	0.000	0.031	0.000	0.000	0.000
Steele City	MT	Harding	294.048	294.111	0.063	SD063	Parchin-Bullock fine sandy loams, 2 to 9 percent slopes	0.000	0.009	0.054	0.000	0.000	0.063	0.000	0.000	0.033
Steele City	MT	Harding	294.111	294.163	0.052	SD063	Bullock-Cabbart complex, 6 to 25 percent slopes	0.000	0.049	0.029	0.000	0.000	0.052	0.000	0.000	0.000
Steele City	MT	Harding	294.163	294.278	0.116	SD063	Parchin-Bullock fine sandy loams, 2 to 9 percent slopes	0.000	0.017	0.100	0.000	0.000	0.116	0.000	0.000	0.061
Steele City	MT	Harding	294.278	294.374	0.096	SD063	Bullock-Cabbart complex, 6 to 25 percent slopes	0.000	0.091	0.054	0.000	0.000	0.096	0.000	0.000	0.000

Appendix K – Soils by Milepost – Steele City Segment

Pipeline Segment	State	County	Beginning Milepost	Ending Milepost	Miles	Soil Series	Soil Series Name	Wind (miles)	Water (miles)	Low revegetation on Potential (miles)	Prime Farmland (miles)	Hydric Soils (miles)	Compaction on Prone (miles)	Stoney – Rocky (miles)	Shallow Bedrock (miles)	Droghty (miles)
Steele City	MT	Harding	294.374	294.440	0.066	SD063	Parchin-Bullock fine sandy loams, 2 to 9 percent slopes	0.000	0.010	0.057	0.000	0.000	0.066	0.000	0.000	0.035
Steele City	MT	Harding	294.440	294.757	0.316	SD063	Bullock-Cabbart complex, 6 to 25 percent slopes	0.000	0.300	0.177	0.000	0.000	0.316	0.000	0.000	0.000
Steele City	MT	Harding	294.757	294.837	0.081	SD063	Parchin-Bullock fine sandy loams, 2 to 9 percent slopes	0.000	0.012	0.069	0.000	0.000	0.081	0.000	0.000	0.043
Steele City	MT	Harding	294.837	294.976	0.139	SD063	Bullock-Cabbart complex, 6 to 25 percent slopes	0.000	0.132	0.078	0.000	0.000	0.139	0.000	0.000	0.000
Steele City	MT	Harding	294.976	295.105	0.129	SD063	Parchin-Bullock fine sandy loams, 2 to 9 percent slopes	0.000	0.019	0.111	0.000	0.000	0.129	0.000	0.000	0.068
Steele City	MT	Harding	295.105	295.183	0.078	SD063	Bullock-Cabbart complex, 6 to 25 percent slopes	0.000	0.074	0.044	0.000	0.000	0.078	0.000	0.000	0.000
Steele City	MT	Harding	295.183	295.305	0.121	SD063	Bullock-Parchin-Slickspots complex, 2 to 9 percent slopes	0.000	0.004	0.097	0.000	0.000	0.121	0.000	0.000	0.047
Steele City	MT	Harding	295.305	295.362	0.057	SD063	Parchin-Bullock fine sandy loams, 2 to 9 percent slopes	0.000	0.009	0.049	0.000	0.000	0.057	0.000	0.000	0.030
Steele City	MT	Harding	295.362	295.517	0.156	SD063	Bullock-Parchin-Slickspots complex, 2 to 9 percent slopes	0.000	0.005	0.125	0.000	0.000	0.156	0.000	0.000	0.061
Steele City	MT	Harding	295.517	295.844	0.326	SD063	Marmarth-Parchin fine sandy loams, 2 to 6 percent slopes	0.000	0.042	0.111	0.000	0.000	0.326	0.000	0.000	0.095
Steele City	MT	Harding	295.844	296.144	0.301	SD063	Parchin-Bullock fine sandy loams, 2 to 9 percent slopes	0.000	0.045	0.258	0.000	0.000	0.301	0.000	0.000	0.159
Steele City	MT	Harding	296.144	296.494	0.350	SD063	Twilight-Parchin fine sandy loams, 6 to 15 percent slopes	0.000	0.140	0.123	0.000	0.000	0.350	0.000	0.000	0.298
Steele City	MT	Harding	296.494	296.773	0.279	SD063	Bullock-Cabbart complex, 6 to 25 percent slopes	0.000	0.265	0.156	0.000	0.000	0.279	0.000	0.000	0.000
Steele City	MT	Harding	296.773	297.015	0.242	SD063	Parchin-Bullock fine sandy loams, 2 to 9 percent slopes	0.000	0.036	0.208	0.000	0.000	0.242	0.000	0.000	0.128
Steele City	MT	Harding	297.015	297.364	0.349	SD063	Bullock-Cabbart complex, 6 to 25 percent slopes	0.000	0.332	0.196	0.000	0.000	0.349	0.000	0.000	0.000
Steele City	MT	Harding	297.364	297.593	0.229	SD063	Archin-Bullock fine sandy loams, 0 to 4 percent slopes	0.000	0.000	0.199	0.000	0.000	0.229	0.000	0.000	0.030
Steele City	MT	Harding	297.593	297.722	0.129	SD063	Twilight-Parchin fine sandy loams, 6 to 15 percent slopes	0.000	0.052	0.045	0.000	0.000	0.129	0.000	0.000	0.109
Steele City	MT	Harding	297.722	297.797	0.075	SD063	Twilight-Blackhall fine sandy loams, 9 to 25 percent slopes	0.000	0.030	0.026	0.000	0.000	0.075	0.000	0.000	0.049
Steele City	MT	Harding	297.797	297.960	0.163	SD063	Twilight-Parchin fine sandy loams, 6 to 15 percent slopes	0.000	0.065	0.057	0.000	0.000	0.163	0.000	0.000	0.138
Steele City	MT	Harding	297.960	298.034	0.074	SD063	Marmarth-Parchin fine sandy loams, 2 to 6 percent slopes	0.000	0.010	0.025	0.000	0.000	0.074	0.000	0.000	0.021
Steele City	MT	Harding	298.034	298.248	0.214	SD063	Twilight-Parchin fine sandy loams, 6 to 15 percent slopes	0.000	0.086	0.075	0.000	0.000	0.214	0.000	0.000	0.182
Steele City	MT	Harding	298.248	298.853	0.606	SD063	Parchin-Bullock fine sandy loams, 2 to 9 percent slopes	0.000	0.091	0.521	0.000	0.000	0.606	0.000	0.000	0.321
Steele City	MT	Harding	298.853	298.935	0.082	SD063	Rhame-Parchin fine sandy loams, 2 to 6 percent slopes	0.000	0.008	0.037	0.000	0.000	0.082	0.000	0.000	0.020
Steele City	MT	Harding	298.935	299.365	0.430	SD063	Parchin-Bullock fine sandy loams, 2 to 9 percent slopes	0.000	0.064	0.369	0.000	0.000	0.430	0.000	0.000	0.228
Steele City	MT	Harding	299.365	299.496	0.132	SD063	Twilight-Parchin fine sandy loams, 6 to 15 percent slopes	0.000	0.053	0.046	0.000	0.000	0.132	0.000	0.000	0.112
Steele City	MT	Harding	299.496	299.542	0.046	SD063	Twilight-Blackhall fine sandy loams, 9 to 25 percent	0.000	0.018	0.016	0.000	0.000	0.046	0.000	0.000	0.030

Appendix K – Soils by Milepost – Steele City Segment

Pipeline Segment	State	County	Beginning Milepost	Ending Milepost	Miles	Soil Series	Soil Series Name	Wind (miles)	Water (miles)	Low revegetation on Potential (miles)	Prime Farmland (miles)	Hydric Soils (miles)	Compaction on Prone (miles)	Stoney – Rocky (miles)	Shallow Bedrock (miles)	Droghty (miles)
							slopes									
Steele City	MT	Harding	299.542	299.588	0.047	SD063	Twilight-Parchin fine sandy loams, 6 to 15 percent slopes	0.000	0.019	0.016	0.000	0.000	0.047	0.000	0.000	0.040
Steele City	MT	Harding	299.588	299.686	0.098	SD063	Rhame-Parchin fine sandy loams, 2 to 6 percent slopes	0.000	0.010	0.044	0.000	0.000	0.098	0.000	0.000	0.024
Steele City	MT	Harding	299.686	299.738	0.052	SD063	Parchin-Bullock fine sandy loams, 2 to 9 percent slopes	0.000	0.008	0.045	0.000	0.000	0.052	0.000	0.000	0.028
Steele City	MT	Harding	299.738	299.770	0.031	SD063	Rhame-Parchin fine sandy loams, 2 to 6 percent slopes	0.000	0.003	0.014	0.000	0.000	0.031	0.000	0.000	0.008
Steele City	MT	Harding	299.770	299.813	0.043	SD063	Parchin-Bullock fine sandy loams, 2 to 9 percent slopes	0.000	0.006	0.037	0.000	0.000	0.043	0.000	0.000	0.023
Steele City	MT	Harding	299.813	299.934	0.121	SD063	Sage loam	0.000	0.000	0.121	0.000	0.103	0.121	0.000	0.000	0.000
Steele City	MT	Harding	299.934	299.995	0.061	SD063	Twilight-Parchin fine sandy loams, 6 to 15 percent slopes	0.000	0.024	0.021	0.000	0.000	0.061	0.000	0.000	0.052
Steele City	MT	Harding	299.995	300.119	0.125	SD063	Bullock-Parchin-Slickspots complex, 2 to 9 percent slopes	0.000	0.004	0.100	0.000	0.000	0.125	0.000	0.000	0.049
Steele City	MT	Harding	300.119	300.201	0.082	SD063	Sage loam	0.000	0.000	0.082	0.000	0.069	0.082	0.000	0.000	0.000
Steele City	MT	Harding	300.201	300.504	0.303	SD063	Twilight-Parchin fine sandy loams, 6 to 15 percent slopes	0.000	0.121	0.106	0.000	0.000	0.303	0.000	0.000	0.258
Steele City	MT	Harding	300.504	300.586	0.082	SD063	Parchin-Bullock fine sandy loams, 2 to 9 percent slopes	0.000	0.012	0.070	0.000	0.000	0.082	0.000	0.000	0.043
Steele City	MT	Harding	300.586	300.753	0.167	SD063	Twilight-Blackhall fine sandy loams, 9 to 25 percent slopes	0.000	0.067	0.058	0.000	0.000	0.167	0.000	0.000	0.108
Steele City	MT	Harding	300.753	300.974	0.221	SD063	Twilight-Parchin fine sandy loams, 6 to 15 percent slopes	0.000	0.088	0.077	0.000	0.000	0.221	0.000	0.000	0.188
Steele City	MT	Harding	300.974	301.036	0.062	SD063	Bullock-Cabbart complex, 6 to 25 percent slopes	0.000	0.059	0.035	0.000	0.000	0.062	0.000	0.000	0.000
Steele City	MT	Harding	301.036	301.210	0.175	SD063	Parchin-Bullock fine sandy loams, 2 to 9 percent slopes	0.000	0.026	0.150	0.000	0.000	0.175	0.000	0.000	0.093
Steele City	MT	Harding	301.210	301.298	0.088	SD063	Bullock-Cabbart complex, 6 to 25 percent slopes	0.000	0.084	0.049	0.000	0.000	0.088	0.000	0.000	0.000
Steele City	MT	Harding	301.298	301.556	0.258	SD063	Bullock-Parchin-Slickspots complex, 2 to 9 percent slopes	0.000	0.008	0.207	0.000	0.000	0.258	0.000	0.000	0.101
Steele City	MT	Harding	301.556	301.779	0.222	SD063	Rhame-Parchin fine sandy loams, 2 to 6 percent slopes	0.000	0.022	0.100	0.000	0.000	0.222	0.000	0.000	0.056
Steele City	MT	Harding	301.779	301.974	0.195	SD063	Twilight-Blackhall fine sandy loams, 9 to 25 percent slopes	0.000	0.078	0.068	0.000	0.000	0.195	0.000	0.000	0.127
Steele City	MT	Harding	301.974	302.456	0.482	SD063	Cabbart-Rock outcrop complex, 15 to 40 percent slopes	0.000	0.458	0.039	0.000	0.000	0.482	0.135	0.121	0.000
Steele City	MT	Harding	302.456	302.486	0.029	SD063	Parchin-Bullock fine sandy loams, 2 to 9 percent slopes	0.000	0.004	0.025	0.000	0.000	0.029	0.000	0.000	0.016
Steele City	MT	Harding	302.486	303.005	0.520	SD063	Twilight-Parchin fine sandy loams, 6 to 15 percent slopes	0.000	0.208	0.182	0.000	0.000	0.520	0.000	0.000	0.442
Steele City	MT	Harding	303.005	303.156	0.151	SD063	Bullock-Cabbart complex, 6 to 25 percent slopes	0.000	0.143	0.085	0.000	0.000	0.151	0.000	0.000	0.000
Steele City	MT	Harding	303.156	303.565	0.409	SD063	Twilight-Blackhall fine sandy loams, 9 to 25 percent slopes	0.000	0.163	0.143	0.000	0.000	0.409	0.000	0.000	0.266
Steele City	MT	Harding	303.565	303.653	0.088	SD063	Twilight-Parchin fine sandy loams, 6 to 15 percent slopes	0.000	0.035	0.031	0.000	0.000	0.088	0.000	0.000	0.075

Appendix K – Soils by Milepost – Steele City Segment

Pipeline Segment	State	County	Beginning Milepost	Ending Milepost	Miles	Soil Series	Soil Series Name	Wind (miles)	Water (miles)	Low revegetation on Potential (miles)	Prime Farmland (miles)	Hydric Soils (miles)	Compaction on Prone (miles)	Stoney – Rocky (miles)	Shallow Bedrock (miles)	Droghty (miles)
Steele City	MT	Harding	303.653	303.881	0.228	SD063	Cabbart-Rock outcrop complex, 15 to 40 percent slopes	0.000	0.217	0.018	0.000	0.000	0.228	0.064	0.057	0.000
Steele City	MT	Harding	303.881	304.011	0.130	SD063	Bullock-Cabbart complex, 6 to 25 percent slopes	0.000	0.123	0.073	0.000	0.000	0.130	0.000	0.000	0.000
Steele City	MT	Harding	304.011	304.191	0.180	SD063	Parchin-Bullock fine sandy loams, 2 to 9 percent slopes	0.000	0.027	0.154	0.000	0.000	0.180	0.000	0.000	0.095
Steele City	MT	Harding	304.191	304.361	0.170	SD063	Assinniboine-Archin fine sandy loams, 0 to 3 percent slopes	0.000	0.000	0.063	0.000	0.000	0.170	0.012	0.000	0.097
Steele City	MT	Harding	304.361	304.428	0.067	SD063	Bullock-Parchin-Slickspots complex, 2 to 9 percent slopes	0.000	0.002	0.054	0.000	0.000	0.067	0.000	0.000	0.026
Steele City	MT	Harding	304.428	304.629	0.201	SD063	Bullock-Cabbart complex, 6 to 25 percent slopes	0.000	0.191	0.112	0.000	0.000	0.201	0.000	0.000	0.000
Steele City	MT	Harding	304.629	304.934	0.305	SD063	Bullock-Parchin-Slickspots complex, 2 to 9 percent slopes	0.000	0.009	0.244	0.000	0.000	0.305	0.000	0.000	0.119
Steele City	MT	Harding	304.934	305.043	0.109	SD063	Twilight-Parchin fine sandy loams, 6 to 15 percent slopes	0.000	0.044	0.038	0.000	0.000	0.109	0.000	0.000	0.093
Steele City	MT	Harding	305.043	305.120	0.078	SD063	Twilight fine sandy loam, 6 to 9 percent slopes	0.000	0.009	0.007	0.000	0.000	0.078	0.000	0.000	0.071
Steele City	MT	Harding	305.120	305.234	0.114	SD063	Rhame-Parchin fine sandy loams, 2 to 6 percent slopes	0.000	0.011	0.051	0.000	0.000	0.114	0.000	0.000	0.028
Steele City	MT	Harding	305.234	305.489	0.255	SD063	Twilight fine sandy loam, 6 to 9 percent slopes	0.000	0.031	0.023	0.000	0.000	0.255	0.000	0.000	0.232
Steele City	MT	Harding	305.489	305.822	0.333	SD063	Rhame-Parchin fine sandy loams, 2 to 6 percent slopes	0.000	0.033	0.150	0.000	0.000	0.333	0.000	0.000	0.083
Steele City	MT	Harding	305.822	306.272	0.451	SD063	Archin-Bullock fine sandy loams, 0 to 4 percent slopes	0.000	0.000	0.392	0.000	0.000	0.451	0.000	0.000	0.059
Steele City	MT	Harding	306.272	306.301	0.028	SD063	Assinniboine-Archin fine sandy loams, 0 to 3 percent slopes	0.000	0.000	0.011	0.000	0.000	0.028	0.002	0.000	0.016
Steele City	MT	Harding	306.301	306.477	0.177	SD063	Bullock-Cabbart complex, 6 to 25 percent slopes	0.000	0.168	0.099	0.000	0.000	0.177	0.000	0.000	0.000
Steele City	MT	Harding	306.477	306.839	0.361	SD063	Rhame-Parchin fine sandy loams, 2 to 6 percent slopes	0.000	0.036	0.163	0.000	0.000	0.361	0.000	0.000	0.090
Steele City	MT	Harding	306.839	306.945	0.107	SD063	Twilight-Parchin fine sandy loams, 6 to 15 percent slopes	0.000	0.043	0.037	0.000	0.000	0.107	0.000	0.000	0.091
Steele City	MT	Harding	306.945	307.139	0.194	SD063	Parchin-Bullock fine sandy loams, 2 to 9 percent slopes	0.000	0.029	0.167	0.000	0.000	0.194	0.000	0.000	0.103
Steele City	MT	Harding	307.139	307.254	0.116	SD063	Bullock-Cabbart complex, 6 to 25 percent slopes	0.000	0.110	0.065	0.000	0.000	0.116	0.000	0.000	0.000
Steele City	MT	Harding	307.254	307.361	0.106	SD063	Parchin-Bullock fine sandy loams, 2 to 9 percent slopes	0.000	0.016	0.091	0.000	0.000	0.106	0.000	0.000	0.056
Steele City	MT	Harding	307.361	307.589	0.229	SD063	Bullock-Parchin-Slickspots complex, 2 to 9 percent slopes	0.000	0.007	0.183	0.000	0.000	0.229	0.000	0.000	0.089
Steele City	MT	Harding	307.589	307.707	0.118	SD063	Twilight-Parchin fine sandy loams, 6 to 15 percent slopes	0.000	0.047	0.041	0.000	0.000	0.118	0.000	0.000	0.100
Steele City	MT	Harding	307.707	307.791	0.084	SD063	Parchin-Bullock fine sandy loams, 2 to 9 percent slopes	0.000	0.013	0.072	0.000	0.000	0.084	0.000	0.000	0.044
Steele City	MT	Harding	307.791	307.868	0.076	SD063	Twilight-Blackhall fine sandy loams, 9 to 25 percent slopes	0.000	0.030	0.027	0.000	0.000	0.076	0.000	0.000	0.050
Steele City	MT	Harding	307.868	308.379	0.512	SD063	Bullock-Parchin-Slickspots complex, 2 to 9 percent slopes	0.000	0.015	0.410	0.000	0.000	0.512	0.000	0.000	0.200
Steele City	MT	Harding	308.379	308.430	0.051	SD063	Cabbart-Rock outcrop complex, 15 to 40 percent slopes	0.000	0.048	0.004	0.000	0.000	0.051	0.014	0.013	0.000

Appendix K – Soils by Milepost – Steele City Segment

Pipeline Segment	State	County	Beginning Milepost	Ending Milepost	Miles	Soil Series	Soil Series Name	Wind (miles)	Water (miles)	Low revegetation on Potential (miles)	Prime Farmland (miles)	Hydric Soils (miles)	Compaction on Prone (miles)	Stoney – Rocky (miles)	Shallow Bedrock (miles)	Droghty (miles)
Steele City	MT	Harding	308.430	308.532	0.102	SD063	Bullock-Cabbart complex, 6 to 25 percent slopes	0.000	0.097	0.057	0.000	0.000	0.102	0.000	0.000	0.000
Steele City	MT	Harding	308.532	308.723	0.191	SD063	Marmarth-Parchin fine sandy loams, 2 to 6 percent slopes	0.000	0.025	0.065	0.000	0.000	0.191	0.000	0.000	0.056
Steele City	MT	Harding	308.723	308.970	0.247	SD063	Bullock-Cabbart complex, 6 to 25 percent slopes	0.000	0.235	0.138	0.000	0.000	0.247	0.000	0.000	0.000
Steele City	MT	Harding	308.970	309.180	0.210	SD063	Bullock-Parchin-Slickspots complex, 2 to 9 percent slopes	0.000	0.006	0.168	0.000	0.000	0.210	0.000	0.000	0.082
Steele City	MT	Harding	309.180	309.335	0.155	SD063	Cabbart-Rock outcrop complex, 15 to 40 percent slopes	0.000	0.147	0.012	0.000	0.000	0.155	0.043	0.039	0.000
Steele City	MT	Harding	309.335	309.766	0.431	SD063	Twilight-Blackhall fine sandy loams, 9 to 25 percent slopes	0.000	0.172	0.151	0.000	0.000	0.431	0.000	0.000	0.280
Steele City	MT	Harding	309.766	309.865	0.100	SD063	Cabbart-Rock outcrop complex, 15 to 40 percent slopes	0.000	0.095	0.008	0.000	0.000	0.100	0.028	0.025	0.000
Steele City	MT	Harding	309.865	310.064	0.199	SD063	Twilight-Blackhall fine sandy loams, 9 to 25 percent slopes	0.000	0.080	0.070	0.000	0.000	0.199	0.000	0.000	0.130
Steele City	MT	Harding	310.064	310.324	0.260	SD063	Parchin-Bullock fine sandy loams, 2 to 9 percent slopes	0.000	0.039	0.223	0.000	0.000	0.260	0.000	0.000	0.138
Steele City	MT	Harding	310.324	310.361	0.037	SD063	Badlands	0.000	0.035	0.005	0.000	0.000	0.037	0.033	0.000	0.000
Steele City	MT	Harding	310.361	310.408	0.047	SD063	Bullock-Parchin-Slickspots complex, 2 to 9 percent slopes	0.000	0.001	0.037	0.000	0.000	0.047	0.000	0.000	0.018
Steele City	MT	Harding	310.408	310.598	0.191	SD063	Twilight-Parchin fine sandy loams, 6 to 15 percent slopes	0.000	0.076	0.067	0.000	0.000	0.191	0.000	0.000	0.162
Steele City	MT	Harding	310.598	310.900	0.301	SD063	Cabbart-Rock outcrop complex, 15 to 40 percent slopes	0.000	0.286	0.024	0.000	0.000	0.301	0.084	0.075	0.000
Steele City	MT	Harding	310.900	311.179	0.279	SD063	Twilight-Parchin fine sandy loams, 6 to 15 percent slopes	0.000	0.112	0.098	0.000	0.000	0.279	0.000	0.000	0.237
Steele City	MT	Harding	311.179	311.360	0.181	SD063	Parchin-Bullock fine sandy loams, 2 to 9 percent slopes	0.000	0.027	0.156	0.000	0.000	0.181	0.000	0.000	0.096
Steele City	MT	Harding	311.360	311.644	0.284	SD063	Twilight-Parchin fine sandy loams, 6 to 15 percent slopes	0.000	0.114	0.099	0.000	0.000	0.284	0.000	0.000	0.242
Steele City	MT	Harding	311.644	311.790	0.145	SD063	Parchin-Bullock fine sandy loams, 2 to 9 percent slopes	0.000	0.022	0.125	0.000	0.000	0.145	0.000	0.000	0.077
Steele City	MT	Harding	311.790	312.426	0.636	SD063	Twilight-Parchin fine sandy loams, 6 to 15 percent slopes	0.000	0.255	0.223	0.000	0.000	0.636	0.000	0.000	0.541
Steele City	MT	Harding	312.426	312.626	0.200	SD063	Parchin-Bullock fine sandy loams, 2 to 9 percent slopes	0.000	0.030	0.172	0.000	0.000	0.200	0.000	0.000	0.106
Steele City	MT	Harding	312.626	312.912	0.286	SD063	Bullock-Parchin-Slickspots complex, 2 to 9 percent slopes	0.000	0.009	0.229	0.000	0.000	0.286	0.000	0.000	0.112
Steele City	MT	Harding	312.912	313.073	0.161	SD063	Rhame fine sandy loam, 2 to 6 percent slopes	0.000	0.008	0.024	0.161	0.000	0.161	0.000	0.000	0.008
Steele City	MT	Harding	313.073	313.132	0.059	SD063	Bullock-Parchin-Slickspots complex, 2 to 9 percent slopes	0.000	0.002	0.047	0.000	0.000	0.059	0.000	0.000	0.023
Steele City	MT	Harding	313.132	313.274	0.142	SD063	Twilight-Parchin fine sandy loams, 6 to 15 percent slopes	0.000	0.057	0.050	0.000	0.000	0.142	0.000	0.000	0.121
Steele City	MT	Harding	313.274	313.433	0.159	SD063	Twilight-Blackhall fine sandy loams, 9 to 25 percent slopes	0.000	0.064	0.056	0.000	0.000	0.159	0.000	0.000	0.103
Steele City	MT	Harding	313.433	313.533	0.100	SD063	Rhame-Parchin fine sandy loams, 2 to 6 percent slopes	0.000	0.010	0.045	0.000	0.000	0.100	0.000	0.000	0.025

Appendix K – Soils by Milepost – Steele City Segment

Pipeline Segment	State	County	Beginning Milepost	Ending Milepost	Miles	Soil Series	Soil Series Name	Wind (miles)	Water (miles)	Low revegetation on Potential (miles)	Prime Farmland (miles)	Hydric Soils (miles)	Compaction on Prone (miles)	Stoney – Rocky (miles)	Shallow Bedrock (miles)	Droghty (miles)
Steele City	MT	Harding	313.533	313.629	0.096	SD063	Twilight fine sandy loam, 6 to 9 percent slopes	0.000	0.011	0.009	0.000	0.000	0.096	0.000	0.000	0.087
Steele City	MT	Harding	313.629	313.729	0.101	SD063	Rhame-Parchin fine sandy loams, 2 to 6 percent slopes	0.000	0.010	0.045	0.000	0.000	0.101	0.000	0.000	0.025
Steele City	MT	Harding	313.729	314.038	0.308	SD063	Twilight-Parchin fine sandy loams, 6 to 15 percent slopes	0.000	0.123	0.108	0.000	0.000	0.308	0.000	0.000	0.262
Steele City	MT	Harding	314.038	314.166	0.128	SD063	Twilight fine sandy loam, 6 to 9 percent slopes	0.000	0.015	0.011	0.000	0.000	0.128	0.000	0.000	0.116
Steele City	MT	Harding	314.166	314.456	0.291	SD063	Trey-Fleak loamy fine sands, 2 to 15 percent slopes	0.218	0.049	0.049	0.000	0.000	0.291	0.000	0.000	0.265
Steele City	MT	Harding	314.456	314.541	0.085	SD063	Twilight-Parchin fine sandy loams, 6 to 15 percent slopes	0.000	0.034	0.030	0.000	0.000	0.085	0.000	0.000	0.072
Steele City	MT	Harding	314.541	314.639	0.098	SD063	Twilight-Blackhall fine sandy loams, 9 to 25 percent slopes	0.000	0.039	0.034	0.000	0.000	0.098	0.000	0.000	0.064
Steele City	MT	Harding	314.639	314.672	0.033	SD063	Twilight fine sandy loam, 6 to 9 percent slopes	0.000	0.004	0.003	0.000	0.000	0.033	0.000	0.000	0.030
Steele City	MT	Harding	314.672	314.858	0.186	SD063	Rhame fine sandy loam, 2 to 6 percent slopes	0.000	0.009	0.028	0.186	0.000	0.186	0.000	0.000	0.009
Steele City	MT	Harding	314.858	315.044	0.186	SD063	Marmarth fine sandy loam, 2 to 6 percent slopes	0.000	0.011	0.017	0.186	0.000	0.186	0.000	0.000	0.011
Steele City	MT	Harding	315.044	315.102	0.058	SD063	Rhame-Parchin fine sandy loams, 2 to 6 percent slopes	0.000	0.006	0.026	0.000	0.000	0.058	0.000	0.000	0.015
Steele City	MT	Harding	315.102	315.222	0.121	SD063	Rhame fine sandy loam, 2 to 6 percent slopes	0.000	0.006	0.018	0.121	0.000	0.121	0.000	0.000	0.006
Steele City	MT	Harding	315.222	315.339	0.117	SD063	Rhame-Parchin fine sandy loams, 2 to 6 percent slopes	0.000	0.012	0.052	0.000	0.000	0.117	0.000	0.000	0.029
Steele City	MT	Harding	315.339	315.626	0.287	SD063	Assinniboine fine sandy loam, 3 to 6 percent slopes	0.000	0.000	0.032	0.287	0.000	0.287	0.000	0.000	0.244
Steele City	MT	Harding	315.626	315.710	0.084	SD063	Parchin-Bullock fine sandy loams, 2 to 9 percent slopes	0.000	0.013	0.072	0.000	0.000	0.084	0.000	0.000	0.044
Steele City	MT	Harding	315.710	316.113	0.404	SD063	Twilight fine sandy loam, 6 to 9 percent slopes	0.000	0.048	0.036	0.000	0.000	0.404	0.000	0.000	0.367
Steele City	MT	Harding	316.113	316.351	0.238	SD063	Rhame-Parchin fine sandy loams, 2 to 6 percent slopes	0.000	0.024	0.107	0.000	0.000	0.238	0.000	0.000	0.059
Steele City	MT	Harding	316.351	316.499	0.148	SD063	Bullock-Cabbart complex, 6 to 25 percent slopes	0.000	0.141	0.083	0.000	0.000	0.148	0.000	0.000	0.000
Steele City	MT	Harding	316.499	317.003	0.504	SD063	Rhame-Parchin fine sandy loams, 2 to 6 percent slopes	0.000	0.050	0.227	0.000	0.000	0.504	0.000	0.000	0.126
Steele City	MT	Harding	317.003	317.263	0.260	SD063	Bullock-Cabbart complex, 6 to 25 percent slopes	0.000	0.247	0.146	0.000	0.000	0.260	0.000	0.000	0.000
Steele City	MT	Harding	317.263	317.540	0.276	SD063	Bullock-Parchin-Slickspots complex, 2 to 9 percent slopes	0.000	0.008	0.221	0.000	0.000	0.276	0.000	0.000	0.108
Steele City	MT	Harding	317.540	317.787	0.247	SD063	Twilight-Parchin fine sandy loams, 6 to 15 percent slopes	0.000	0.099	0.087	0.000	0.000	0.247	0.000	0.000	0.210
Steele City	MT	Harding	317.787	317.800	0.014	SD063	Hanly fine sandy loam	0.000	0.000	0.002	0.000	0.001	0.014	0.000	0.000	0.000
Steele City	MT	Harding	317.800	317.903	0.103	SD063	Hanly-Dogiecreek fine sandy loams	0.000	0.000	0.054	0.000	0.036	0.103	0.000	0.000	0.000
Steele City	MT	Harding	317.903	318.119	0.216	SD063	Trey-Parchin-Bullock complex, 2 to 9 percent slopes	0.095	0.009	0.102	0.000	0.000	0.216	0.000	0.000	0.162
Steele City	MT	Harding	318.119	318.180	0.060	SD063	Zeona-Blownout land complex, 2 to 15 percent slopes	0.036	0.003	0.003	0.000	0.000	0.060	0.000	0.000	0.042
Steele City	MT	Harding	318.180	318.304	0.124	SD063	Trey-Parchin-Bullock complex, 2 to 9 percent slopes	0.055	0.005	0.058	0.000	0.000	0.124	0.000	0.000	0.093
Steele City	MT	Harding	318.304	318.362	0.058	SD063	Zeona-Blownout land complex, 2 to 15 percent slopes	0.035	0.003	0.003	0.000	0.000	0.058	0.000	0.000	0.041
Steele City	MT	Harding	318.362	318.580	0.217	SD063	Zeona loamy fine sand, 2 to 9 percent slopes	0.193	0.017	0.017	0.000	0.000	0.217	0.000	0.000	0.209
Steele City	MT	Harding	318.580	319.246	0.666	SD063	Trey-Fleak loamy fine sands, 2 to 15 percent slopes	0.500	0.113	0.113	0.000	0.000	0.666	0.000	0.000	0.606
Steele City	MT	Harding	319.246	319.615	0.369	SD063	Zeona loamy fine sand, 9 to 25 percent slopes	0.332	0.369	0.037	0.000	0.000	0.369	0.000	0.000	0.351
Steele City	MT	Harding	319.615	319.687	0.072	SD063	Trey-Fleak loamy fine sands, 2 to 15 percent slopes	0.054	0.012	0.012	0.000	0.000	0.072	0.000	0.000	0.066

Appendix K – Soils by Milepost – Steele City Segment

Pipeline Segment	State	County	Beginning Milepost	Ending Milepost	Miles	Soil Series	Soil Series Name	Wind (miles)	Water (miles)	Low revegetation on Potential (miles)	Prime Farmland (miles)	Hydric Soils (miles)	Compaction on Prone (miles)	Stoney – Rocky (miles)	Shallow Bedrock (miles)	Droghty (miles)
Steele City	MT	Harding	319.687	319.768	0.081	SD063	Zeona loamy fine sand, 9 to 25 percent slopes	0.073	0.081	0.008	0.000	0.000	0.081	0.000	0.000	0.077
Steele City	MT	Harding	319.768	319.824	0.056	SD063	Trey-Fleak loamy fine sands, 2 to 15 percent slopes	0.042	0.009	0.009	0.000	0.000	0.056	0.000	0.000	0.051
Steele City	MT	Harding	319.824	320.367	0.543	SD063	Zeona loamy fine sand, 9 to 25 percent slopes	0.489	0.543	0.054	0.000	0.000	0.543	0.000	0.000	0.516
Steele City	MT	Harding	320.367	320.485	0.118	SD063	Zeona loamy fine sand, 2 to 9 percent slopes	0.105	0.009	0.009	0.000	0.000	0.118	0.000	0.000	0.113
Steele City	MT	Harding	320.485	321.522	1.037	SD063	Twilight fine sandy loam, 6 to 9 percent slopes	0.000	0.124	0.093	0.000	0.000	1.037	0.000	0.000	0.944
Steele City	MT	Harding	321.522	321.569	0.047	SD063	Zeona loamy fine sand, 2 to 9 percent slopes	0.042	0.004	0.004	0.000	0.000	0.047	0.000	0.000	0.045
Steele City	MT	Harding	321.569	321.635	0.066	SD063	Chinook fine sandy loam, 0 to 3 percent slopes	0.000	0.000	0.007	0.066	0.000	0.066	0.003	0.000	0.059
Steele City	MT	Harding	321.635	321.705	0.070	SD063	Zeona loamy fine sand, 2 to 9 percent slopes	0.063	0.006	0.006	0.000	0.000	0.070	0.000	0.000	0.067
Steele City	MT	Harding	321.705	321.811	0.106	SD063	Rhame fine sandy loam, 2 to 6 percent slopes	0.000	0.005	0.016	0.106	0.000	0.106	0.000	0.000	0.005
Steele City	MT	Harding	321.811	321.903	0.092	SD063	Chinook fine sandy loam, 0 to 3 percent slopes	0.000	0.000	0.010	0.092	0.000	0.092	0.004	0.000	0.082
Steele City	MT	Harding	321.903	322.397	0.494	SD063	Rhame fine sandy loam, 2 to 6 percent slopes	0.000	0.025	0.074	0.494	0.000	0.494	0.000	0.000	0.025
Steele City	MT	Harding	322.397	322.557	0.160	SD063	Chinook-Archin fine sandy loams, 0 to 3 percent slopes	0.000	0.000	0.064	0.000	0.000	0.160	0.008	0.000	0.096
Steele City	MT	Harding	322.557	322.776	0.219	SD063	Chinook fine sandy loam, 0 to 3 percent slopes	0.000	0.000	0.024	0.219	0.000	0.219	0.009	0.000	0.195
Steele City	MT	Harding	322.776	322.868	0.092	SD063	Hanly-Dogiecreek fine sandy loams	0.000	0.000	0.049	0.000	0.032	0.092	0.000	0.000	0.000
Steele City	MT	Harding	322.868	322.969	0.100	SD063	Zeona loamy fine sand, 2 to 9 percent slopes	0.089	0.008	0.008	0.000	0.000	0.100	0.000	0.000	0.096
Steele City	MT	Harding	322.969	323.010	0.042	SD063	Zeona-Blownout land complex, 2 to 15 percent slopes	0.025	0.002	0.002	0.000	0.000	0.042	0.000	0.000	0.029
Steele City	MT	Harding	323.010	323.075	0.065	SD063	Trey-Parchin-Bullock complex, 2 to 9 percent slopes	0.029	0.003	0.031	0.000	0.000	0.065	0.000	0.000	0.049
Steele City	MT	Harding	323.075	323.238	0.162	SD063	Hanly-Slickspots complex	0.097	0.000	0.065	0.000	0.002	0.162	0.000	0.000	0.097
Steele City	MT	Harding	323.238	323.306	0.069	SD063	Zeona loamy fine sand, 2 to 9 percent slopes	0.061	0.006	0.006	0.000	0.000	0.069	0.000	0.000	0.066
Steele City	MT	Harding	323.306	323.499	0.193	SD063	Fleak-Trey-Rock outcrop complex, 15 to 50 percent slopes	0.232	0.174	0.019	0.000	0.000	0.193	0.039	0.039	0.135
Steele City	MT	Harding	323.499	323.788	0.288	SD063	Trey loamy fine sand, 2 to 9 percent slopes	0.265	0.023	0.023	0.000	0.000	0.288	0.000	0.000	0.277
Steele City	MT	Harding	323.788	324.321	0.534	SD063	Fleak-Trey-Rock outcrop complex, 15 to 50 percent slopes	0.640	0.480	0.053	0.000	0.000	0.534	0.107	0.107	0.374
Steele City	MT	Harding	324.321	324.716	0.395	SD063	Zeona-Blownout land complex, 2 to 15 percent slopes	0.237	0.020	0.020	0.000	0.000	0.395	0.000	0.000	0.276
Steele City	MT	Harding	324.716	324.936	0.220	SD063	Trey-Fleak loamy fine sands, 2 to 15 percent slopes	0.165	0.037	0.037	0.000	0.000	0.220	0.000	0.000	0.200
Steele City	MT	Harding	324.936	325.241	0.305	SD063	Fleak-Trey-Rock outcrop complex, 15 to 50 percent slopes	0.366	0.274	0.030	0.000	0.000	0.305	0.061	0.061	0.213
Steele City	MT	Harding	325.241	325.327	0.086	SD063	Twilight fine sandy loam, 6 to 9 percent slopes	0.000	0.010	0.008	0.000	0.000	0.086	0.000	0.000	0.078
Steele City	MT	Harding	325.327	325.379	0.052	SD063	Rhame-Parchin fine sandy loams, 2 to 6 percent slopes	0.000	0.005	0.023	0.000	0.000	0.052	0.000	0.000	0.013
Steele City	MT	Harding	325.379	325.422	0.044	SD063	Twilight fine sandy loam, 6 to 9 percent slopes	0.000	0.005	0.004	0.000	0.000	0.044	0.000	0.000	0.040
Steele City	MT	Harding	325.422	325.761	0.339	SD063	Rhame-Parchin fine sandy loams, 2 to 6 percent slopes	0.000	0.034	0.152	0.000	0.000	0.339	0.000	0.000	0.085
Steele City	MT	Harding	325.761	326.061	0.300	SD063	Rhame fine sandy loam, 2 to 6 percent slopes	0.000	0.015	0.045	0.300	0.000	0.300	0.000	0.000	0.015
Steele City	MT	Harding	326.061	326.175	0.114	SD063	Twilight fine sandy loam, 6 to 9 percent slopes	0.000	0.014	0.010	0.000	0.000	0.114	0.000	0.000	0.104
Steele City	MT	Harding	326.175	326.423	0.248	SD063	Assinniboine-Archin fine sandy loams, 0 to 3 percent slopes	0.000	0.000	0.092	0.000	0.000	0.248	0.017	0.000	0.141
Steele City	MT	Harding	326.423	326.462	0.039	SD063	Rhame-Parchin fine sandy loams, 2 to 6 percent slopes	0.000	0.004	0.018	0.000	0.000	0.039	0.000	0.000	0.010
Steele City	MT	Harding	326.462	326.635	0.173	SD063	Assinniboine fine sandy loam, 3 to 6 percent slopes	0.000	0.000	0.019	0.173	0.000	0.173	0.000	0.000	0.147
Steele City	MT	Harding	326.635	326.668	0.033	SD063	Assinniboine-Archin fine sandy loams, 0 to 3 percent	0.000	0.000	0.012	0.000	0.000	0.033	0.002	0.000	0.019

Appendix K – Soils by Milepost – Steele City Segment

Pipeline Segment	State	County	Beginning Milepost	Ending Milepost	Miles	Soil Series	Soil Series Name	Wind (miles)	Water (miles)	Low revegetation on Potential (miles)	Prime Farmland (miles)	Hydric Soils (miles)	Compaction on Prone (miles)	Stoney – Rocky (miles)	Shallow Bedrock (miles)	Droghty (miles)
							slopes									
Steele City	MT	Harding	326.668	326.927	0.259	SD063	Parchin-Bullock fine sandy loams, 2 to 9 percent slopes	0.000	0.039	0.223	0.000	0.000	0.259	0.000	0.000	0.137
Steele City	MT	Harding	326.927	327.126	0.199	SD063	Rhame-Parchin fine sandy loams, 2 to 6 percent slopes	0.000	0.020	0.089	0.000	0.000	0.199	0.000	0.000	0.050
Steele City	MT	Harding	327.126	327.385	0.259	SD063	Rhame fine sandy loam, 2 to 6 percent slopes	0.000	0.013	0.039	0.259	0.000	0.259	0.000	0.000	0.013
Steele City	MT	Harding	327.385	327.484	0.099	SD063	Parchin-Bullock fine sandy loams, 2 to 9 percent slopes	0.000	0.015	0.085	0.000	0.000	0.099	0.000	0.000	0.053
Steele City	MT	Harding	327.484	327.912	0.428	SD063	Rhame fine sandy loam, 2 to 6 percent slopes	0.000	0.021	0.064	0.428	0.000	0.428	0.000	0.000	0.021
Steele City	MT	Harding	327.912	327.962	0.050	SD063	Archin-Bullock fine sandy loams, 0 to 4 percent slopes	0.000	0.000	0.044	0.000	0.000	0.050	0.000	0.000	0.007
Steele City	MT	Harding	327.962	328.132	0.170	SD063	Gerdrum silt loam, 0 to 4 percent slopes	0.000	0.000	0.170	0.000	0.000	0.170	0.000	0.000	0.000
Steele City	MT	Harding	328.132	328.150	0.018	SD063	Archin-Bullock fine sandy loams, 0 to 4 percent slopes	0.000	0.000	0.015	0.000	0.000	0.018	0.000	0.000	0.002
Steele City	MT	Harding	328.150	328.157	0.007	SD063	Gerdrum silt loam, 0 to 4 percent slopes	0.000	0.000	0.007	0.000	0.000	0.007	0.000	0.000	0.000
Steele City	MT	Harding	328.157	328.274	0.117	SD063	Bullock-Cabbart complex, 6 to 25 percent slopes	0.000	0.111	0.065	0.000	0.000	0.117	0.000	0.000	0.000
Steele City	MT	Harding	328.274	328.341	0.067	SD063	Korchea loam	0.000	0.000	0.010	0.067	0.001	0.067	0.000	0.000	0.000
Steele City	MT	Harding	328.341	328.705	0.363	SD063	Bullock-Cabbart complex, 6 to 25 percent slopes	0.000	0.345	0.203	0.000	0.000	0.363	0.000	0.000	0.000
Steele City	MT	Harding	328.705	328.828	0.123	SD063	Cabbart-Rock outcrop complex, 15 to 40 percent slopes	0.000	0.117	0.010	0.000	0.000	0.123	0.034	0.031	0.000
Steele City	MT	Harding	328.828	328.891	0.063	SD063	Parchin-Bullock fine sandy loams, 2 to 9 percent slopes	0.000	0.009	0.054	0.000	0.000	0.063	0.000	0.000	0.033
Steele City	MT	Harding	328.891	328.967	0.076	SD063	Cabbart-Rock outcrop complex, 15 to 40 percent slopes	0.000	0.072	0.006	0.000	0.000	0.076	0.021	0.019	0.000
Steele City	MT	Harding	328.967	329.095	0.128	SD063	Bullock-Parchin-Slickspots complex, 2 to 9 percent slopes	0.000	0.004	0.103	0.000	0.000	0.128	0.000	0.000	0.050
Steele City	MT	Harding	329.095	329.243	0.148	SD063	Parchin-Bullock fine sandy loams, 2 to 9 percent slopes	0.000	0.022	0.127	0.000	0.000	0.148	0.000	0.000	0.078
Steele City	MT	Harding	329.243	329.406	0.164	SD063	Bullock-Parchin-Slickspots complex, 2 to 9 percent slopes	0.000	0.005	0.131	0.000	0.000	0.164	0.000	0.000	0.064
Steele City	MT	Harding	329.406	329.453	0.047	SD063	Parchin-Bullock fine sandy loams, 2 to 9 percent slopes	0.000	0.007	0.040	0.000	0.000	0.047	0.000	0.000	0.025
Steele City	MT	Harding	329.453	329.521	0.068	SD063	Bullock-Parchin-Slickspots complex, 2 to 9 percent slopes	0.000	0.002	0.055	0.000	0.000	0.068	0.000	0.000	0.027
Steele City	MT	Harding	329.521	329.599	0.078	SD063	Parchin-Bullock fine sandy loams, 2 to 9 percent slopes	0.000	0.012	0.067	0.000	0.000	0.078	0.000	0.000	0.041
Steele City	MT	Harding	329.599	330.099	0.500	SD063	Bullock-Parchin-Slickspots complex, 2 to 9 percent slopes	0.000	0.015	0.400	0.000	0.000	0.500	0.000	0.000	0.195
Steele City	MT	Harding	330.099	330.165	0.067	SD063	Twilight-Parchin fine sandy loams, 6 to 15 percent slopes	0.000	0.027	0.023	0.000	0.000	0.067	0.000	0.000	0.057
Steele City	MT	Harding	330.165	330.188	0.023	SD063	Archin-Bullock fine sandy loams, 0 to 4 percent slopes	0.000	0.000	0.020	0.000	0.000	0.023	0.000	0.000	0.003
Steele City	MT	Harding	330.188	330.217	0.029	SD063	Bullock-Parchin-Slickspots complex, 2 to 9 percent slopes	0.000	0.001	0.023	0.000	0.000	0.029	0.000	0.000	0.011
Steele City	MT	Harding	330.217	330.388	0.171	SD063	Archin-Bullock fine sandy loams, 0 to 4 percent slopes	0.000	0.000	0.149	0.000	0.000	0.171	0.000	0.000	0.022

Appendix K – Soils by Milepost – Steele City Segment

Pipeline Segment	State	County	Beginning Milepost	Ending Milepost	Miles	Soil Series	Soil Series Name	Wind (miles)	Water (miles)	Low revegetation on Potential (miles)	Prime Farmland (miles)	Hydric Soils (miles)	Compaction on Prone (miles)	Stoney – Rocky (miles)	Shallow Bedrock (miles)	Droghty (miles)
Steele City	MT	Harding	330.388	330.491	0.103	SD063	Bullock-Cabbart complex, 6 to 25 percent slopes	0.000	0.098	0.058	0.000	0.000	0.103	0.000	0.000	0.000
Steele City	MT	Harding	330.491	330.614	0.123	SD063	Archin-Bullock fine sandy loams, 0 to 4 percent slopes	0.000	0.000	0.107	0.000	0.000	0.123	0.000	0.000	0.016
Steele City	MT	Harding	330.614	330.708	0.093	SD063	Cabbart loam, 6 to 60 percent slopes, extremely stony	0.000	0.086	0.080	0.000	0.000	0.093	0.074	0.000	0.005
Steele City	MT	Harding	330.708	330.812	0.105	SD063	Marmarth-Parchin fine sandy loams, 2 to 6 percent slopes	0.000	0.014	0.036	0.000	0.000	0.105	0.000	0.000	0.030
Steele City	MT	Harding	330.812	331.299	0.486	SD063	Bullock-Parchin-Slickspots complex, 2 to 9 percent slopes	0.000	0.015	0.389	0.000	0.000	0.486	0.000	0.000	0.190
Steele City	MT	Harding	331.299	331.606	0.308	SD063	Bullock-Cabbart complex, 6 to 25 percent slopes	0.000	0.292	0.172	0.000	0.000	0.308	0.000	0.000	0.000
Steele City	MT	Harding	331.606	332.019	0.412	SD063	Tanna-Rhoades complex, 2 to 9 percent slopes	0.000	0.412	0.371	0.000	0.000	0.412	0.000	0.000	0.000
Steele City	MT	Harding	332.019	332.284	0.265	SD063	Parchin-Bullock fine sandy loams, 2 to 9 percent slopes	0.000	0.040	0.228	0.000	0.000	0.265	0.000	0.000	0.140
Steele City	MT	Harding	332.284	332.337	0.053	SD063	Bullock-Cabbart complex, 6 to 25 percent slopes	0.000	0.050	0.030	0.000	0.000	0.053	0.000	0.000	0.000
Steele City	MT	Harding	332.337	332.828	0.491	SD063	Bullock-Parchin-Slickspots complex, 2 to 9 percent slopes	0.000	0.015	0.393	0.000	0.000	0.491	0.000	0.000	0.191
Steele City	MT	Harding	332.828	332.861	0.033	SD063	Parchin-Bullock fine sandy loams, 2 to 9 percent slopes	0.000	0.005	0.028	0.000	0.000	0.033	0.000	0.000	0.017
Steele City	MT	Harding	332.861	332.891	0.031	SD063	Bullock-Parchin-Slickspots complex, 2 to 9 percent slopes	0.000	0.001	0.024	0.000	0.000	0.031	0.000	0.000	0.012
Steele City	MT	Harding	332.891	333.099	0.208	SD063	Parchin-Bullock fine sandy loams, 2 to 9 percent slopes	0.000	0.031	0.179	0.000	0.000	0.208	0.000	0.000	0.110
Steele City	MT	Harding	333.099	333.349	0.249	SD063	Marmarth-Parchin fine sandy loams, 2 to 6 percent slopes	0.000	0.032	0.085	0.000	0.000	0.249	0.000	0.000	0.072
Steele City	MT	Harding	333.349	333.419	0.071	SD063	Bullock-Parchin-Slickspots complex, 2 to 9 percent slopes	0.000	0.002	0.057	0.000	0.000	0.071	0.000	0.000	0.028
Steele City	MT	Harding	333.419	333.505	0.086	SD063	Marmarth-Parchin fine sandy loams, 2 to 6 percent slopes	0.000	0.011	0.029	0.000	0.000	0.086	0.000	0.000	0.025
Steele City	MT	Harding	333.505	333.661	0.156	SD063	Marmarth-Twilight fine sandy loams, 9 to 15 percent slopes	0.000	0.109	0.030	0.000	0.000	0.156	0.000	0.000	0.056
Steele City	MT	Harding	333.661	333.832	0.172	SD063	Twilight-Parchin fine sandy loams, 6 to 15 percent slopes	0.000	0.069	0.060	0.000	0.000	0.172	0.000	0.000	0.146
Steele City	MT	Harding	333.832	333.930	0.098	SD063	Cabbart-Rock outcrop complex, 15 to 40 percent slopes	0.000	0.093	0.008	0.000	0.000	0.098	0.027	0.024	0.000
Steele City	MT	Harding	333.930	333.995	0.065	SD063	Rhame-Parchin fine sandy loams, 2 to 6 percent slopes	0.000	0.006	0.029	0.000	0.000	0.065	0.000	0.000	0.016
Steele City	MT	Harding	333.995	334.149	0.154	SD063	Bullock-Parchin-Slickspots complex, 2 to 9 percent slopes	0.000	0.005	0.123	0.000	0.000	0.154	0.000	0.000	0.060
Steele City	MT	Harding	334.149	334.249	0.101	SD063	Twilight-Parchin fine sandy loams, 6 to 15 percent slopes	0.000	0.040	0.035	0.000	0.000	0.101	0.000	0.000	0.086
Steele City	MT	Harding	334.249	334.297	0.048	SD063	Parchin-Bullock fine sandy loams, 2 to 9 percent slopes	0.000	0.007	0.041	0.000	0.000	0.048	0.000	0.000	0.025
Steele City	MT	Harding	334.297	335.411	1.114	SD063	Twilight-Parchin fine sandy loams, 6 to 15 percent slopes	0.000	0.446	0.390	0.000	0.000	1.114	0.000	0.000	0.947
Steele City	MT	Harding	335.411	335.507	0.096	SD063	Twilight-Blackhall fine sandy loams, 9 to 25 percent slopes	0.000	0.038	0.034	0.000	0.000	0.096	0.000	0.000	0.062

Appendix K – Soils by Milepost – Steele City Segment

Pipeline Segment	State	County	Beginning Milepost	Ending Milepost	Miles	Soil Series	Soil Series Name	Wind (miles)	Water (miles)	Low revegetation on Potential (miles)	Prime Farmland (miles)	Hydric Soils (miles)	Compaction on Prone (miles)	Stoney – Rocky (miles)	Shallow Bedrock (miles)	Droghty (miles)
Steele City	MT	Harding	335.507	335.644	0.137	SD063	Twilight-Parchin fine sandy loams, 6 to 15 percent slopes	0.000	0.055	0.048	0.000	0.000	0.137	0.000	0.000	0.117
Steele City	MT	Harding	335.644	335.790	0.146	SD063	Twilight-Blackhall fine sandy loams, 9 to 25 percent slopes	0.000	0.058	0.051	0.000	0.000	0.146	0.000	0.000	0.095
Steele City	MT	Harding	335.790	335.952	0.162	SD063	Twilight-Parchin fine sandy loams, 6 to 15 percent slopes	0.000	0.065	0.057	0.000	0.000	0.162	0.000	0.000	0.138
Steele City	MT	Harding	335.952	336.108	0.156	SD063	Parchin-Bullock fine sandy loams, 2 to 9 percent slopes	0.000	0.023	0.134	0.000	0.000	0.156	0.000	0.000	0.082
Steele City	MT	Harding	336.108	336.286	0.178	SD063	Bullock-Parchin-Slickspots complex, 2 to 9 percent slopes	0.000	0.005	0.142	0.000	0.000	0.178	0.000	0.000	0.069
Steele City	MT	Harding	336.286	336.386	0.100	SD063	Twilight-Blackhall fine sandy loams, 9 to 25 percent slopes	0.000	0.040	0.035	0.000	0.000	0.100	0.000	0.000	0.065
Steele City	MT	Harding	336.386	336.551	0.165	SD063	Twilight-Parchin fine sandy loams, 6 to 15 percent slopes	0.000	0.066	0.058	0.000	0.000	0.165	0.000	0.000	0.141
Steele City	MT	Harding	336.551	336.718	0.167	SD063	Parchin-Bullock fine sandy loams, 2 to 9 percent slopes	0.000	0.025	0.143	0.000	0.000	0.167	0.000	0.000	0.088
Steele City	MT	Harding	336.718	336.882	0.164	SD063	Twilight-Blackhall fine sandy loams, 9 to 25 percent slopes	0.000	0.066	0.057	0.000	0.000	0.164	0.000	0.000	0.106
Steele City	MT	Harding	336.882	336.966	0.084	SD063	Marmarth-Parchin fine sandy loams, 2 to 6 percent slopes	0.000	0.011	0.029	0.000	0.000	0.084	0.000	0.000	0.024
Steele City	MT	Harding	336.966	337.106	0.140	SD063	Parchin-Bullock fine sandy loams, 2 to 9 percent slopes	0.000	0.021	0.120	0.000	0.000	0.140	0.000	0.000	0.074
Steele City	MT	Harding	337.106	337.185	0.079	SD063	Marmarth-Parchin fine sandy loams, 2 to 6 percent slopes	0.000	0.010	0.027	0.000	0.000	0.079	0.000	0.000	0.023
Steele City	MT	Harding	337.185	337.306	0.120	SD063	Parchin-Bullock fine sandy loams, 2 to 9 percent slopes	0.000	0.018	0.104	0.000	0.000	0.120	0.000	0.000	0.064
Steele City	MT	Harding	337.306	337.733	0.427	SD063	Gerdrum silt loam, 0 to 4 percent slopes	0.000	0.000	0.427	0.000	0.000	0.427	0.000	0.000	0.000
Steele City	MT	Harding	337.733	337.829	0.096	SD063	Twilight-Parchin fine sandy loams, 6 to 15 percent slopes	0.000	0.038	0.034	0.000	0.000	0.096	0.000	0.000	0.082
Steele City	MT	Harding	337.829	337.997	0.168	SD063	Gerdrum silt loam, 0 to 4 percent slopes	0.000	0.000	0.168	0.000	0.000	0.168	0.000	0.000	0.000
Steele City	MT	Harding	337.997	338.165	0.168	SD063	Parchin-Bullock fine sandy loams, 2 to 9 percent slopes	0.000	0.025	0.144	0.000	0.000	0.168	0.000	0.000	0.089
Steele City	MT	Harding	338.165	338.304	0.139	SD063	Cabbart-Delridge loams, 15 to 40 percent slopes	0.000	0.128	0.013	0.000	0.000	0.139	0.004	0.000	0.004
Steele City	MT	Harding	338.304	338.474	0.171	SD063	Korchea loam, channeled	0.000	0.000	0.027	0.000	0.007	0.171	0.000	0.000	0.000
Steele City	MT	Harding	338.474	338.573	0.099	SD063	Rhame-Parchin fine sandy loams, 2 to 6 percent slopes	0.000	0.010	0.045	0.000	0.000	0.099	0.000	0.000	0.025
Steele City	MT	Harding	338.573	338.712	0.139	SD063	Bullock-Parchin-Slickspots complex, 2 to 9 percent slopes	0.000	0.004	0.111	0.000	0.000	0.139	0.000	0.000	0.054
Steele City	MT	Harding	338.712	338.805	0.093	SD063	Rhame-Parchin fine sandy loams, 2 to 6 percent slopes	0.000	0.009	0.042	0.000	0.000	0.093	0.000	0.000	0.023
Steele City	MT	Harding	338.805	339.011	0.205	SD063	Assinniboine-Archin fine sandy loams, 0 to 3 percent slopes	0.000	0.000	0.076	0.000	0.000	0.205	0.014	0.000	0.117
Steele City	MT	Harding	339.011	339.200	0.190	SD063	Gerdrum silt loam, 0 to 4 percent slopes	0.000	0.000	0.190	0.000	0.000	0.190	0.000	0.000	0.000
Steele City	MT	Harding	339.200	339.287	0.087	SD063	Assinniboine fine sandy loam, 0 to 3 percent slopes	0.000	0.000	0.013	0.087	0.000	0.087	0.000	0.000	0.074
Steele City	MT	Harding	339.287	339.390	0.103	SD063	Havre-Harlake complex	0.000	0.000	0.097	0.102	0.009	0.103	0.000	0.000	0.000
Steele City	MT	Harding	339.390	339.470	0.080	SD063	Rhame-Parchin fine sandy loams, 2 to 6 percent	0.000	0.008	0.036	0.000	0.000	0.080	0.000	0.000	0.020

Appendix K – Soils by Milepost – Steele City Segment

Pipeline Segment	State	County	Beginning Milepost	Ending Milepost	Miles	Soil Series	Soil Series Name	Wind (miles)	Water (miles)	Low revegetation on Potential (miles)	Prime Farmland (miles)	Hydric Soils (miles)	Compaction on Prone (miles)	Stoney – Rocky (miles)	Shallow Bedrock (miles)	Droghty (miles)
							slopes									
Steele City	MT	Harding	339.470	339.768	0.298	SD063	Assinniboine-Archin fine sandy loams, 0 to 3 percent slopes	0.000	0.000	0.110	0.000	0.000	0.298	0.021	0.000	0.170
Steele City	MT	Harding	339.768	339.950	0.182	SD063	Archin-Bullock fine sandy loams, 0 to 4 percent slopes	0.000	0.000	0.159	0.000	0.000	0.182	0.000	0.000	0.024
Steele City	MT	Harding	339.950	340.200	0.250	SD063	Bullock-Cabbart complex, 6 to 25 percent slopes	0.000	0.238	0.140	0.000	0.000	0.250	0.000	0.000	0.000
Steele City	MT	Harding	340.200	340.337	0.137	SD063	Twilight-Parchin fine sandy loams, 6 to 15 percent slopes	0.000	0.055	0.048	0.000	0.000	0.137	0.000	0.000	0.116
Steele City	MT	Harding	340.337	340.370	0.033	SD063	Parchin-Bullock fine sandy loams, 2 to 9 percent slopes	0.000	0.005	0.028	0.000	0.000	0.033	0.000	0.000	0.017
Steele City	MT	Harding	340.370	340.418	0.048	SD063	Twilight-Parchin fine sandy loams, 6 to 15 percent slopes	0.000	0.019	0.017	0.000	0.000	0.048	0.000	0.000	0.041
Steele City	MT	Harding	340.418	340.478	0.061	SD063	Parchin-Bullock fine sandy loams, 2 to 9 percent slopes	0.000	0.009	0.052	0.000	0.000	0.061	0.000	0.000	0.032
Steele City	MT	Harding	340.478	340.533	0.055	SD063	Archin-Bullock fine sandy loams, 0 to 4 percent slopes	0.000	0.000	0.048	0.000	0.000	0.055	0.000	0.000	0.007
Steele City	MT	Harding	340.533	340.641	0.108	SD063	Parchin-Bullock fine sandy loams, 2 to 9 percent slopes	0.000	0.016	0.092	0.000	0.000	0.108	0.000	0.000	0.057
Steele City	MT	Harding	340.641	341.365	0.724	SD063	Archin-Bullock fine sandy loams, 0 to 4 percent slopes	0.000	0.000	0.630	0.000	0.000	0.724	0.000	0.000	0.094
Steele City	MT	Harding	341.365	341.423	0.059	SD063	Assinniboine-Archin fine sandy loams, 0 to 3 percent slopes	0.000	0.000	0.022	0.000	0.000	0.059	0.004	0.000	0.033
Steele City	MT	Harding	341.423	341.487	0.063	SD063	Archin-Bullock fine sandy loams, 0 to 4 percent slopes	0.000	0.000	0.055	0.000	0.000	0.063	0.000	0.000	0.008
Steele City	MT	Harding	341.487	341.590	0.103	SD063	Assinniboine fine sandy loam, 0 to 3 percent slopes	0.000	0.000	0.015	0.103	0.000	0.103	0.000	0.000	0.088
Steele City	MT	Harding	341.590	341.753	0.163	SD063	Archin-Bullock fine sandy loams, 0 to 4 percent slopes	0.000	0.000	0.142	0.000	0.000	0.163	0.000	0.000	0.021
Steele City	MT	Harding	341.753	341.832	0.080	SD063	Bullock-Parchin-Slickspots complex, 2 to 9 percent slopes	0.000	0.002	0.064	0.000	0.000	0.080	0.000	0.000	0.031
Steele City	MT	Harding	341.832	341.916	0.083	SD063	Archin-Bullock fine sandy loams, 0 to 4 percent slopes	0.000	0.000	0.072	0.000	0.000	0.083	0.000	0.000	0.011
Steele City	MT	Harding	341.916	342.031	0.116	SD063	Bullock-Cabbart complex, 6 to 25 percent slopes	0.000	0.110	0.065	0.000	0.000	0.116	0.000	0.000	0.000
Steele City	MT	Harding	342.031	342.140	0.108	SD063	Bullock-Slickspots complex, 0 to 4 percent slopes	0.000	0.000	0.095	0.000	0.000	0.108	0.000	0.000	0.012
Steele City	MT	Harding	342.140	342.330	0.190	SD063	Marmarth-Parchin fine sandy loams, 2 to 6 percent slopes	0.000	0.025	0.065	0.000	0.000	0.190	0.000	0.000	0.055
Steele City	MT	Harding	342.330	342.579	0.250	SD063	Parchin-Bullock fine sandy loams, 2 to 9 percent slopes	0.000	0.037	0.215	0.000	0.000	0.250	0.000	0.000	0.132
Steele City	MT	Harding	342.579	342.698	0.118	SD063	Bullock-Parchin-Slickspots complex, 2 to 9 percent slopes	0.000	0.004	0.095	0.000	0.000	0.118	0.000	0.000	0.046
Steele City	MT	Harding	342.698	342.910	0.213	SD063	Parchin-Bullock fine sandy loams, 2 to 9 percent slopes	0.000	0.032	0.183	0.000	0.000	0.213	0.000	0.000	0.113
Steele City	MT	Harding	342.910	343.037	0.127	SD063	Twilight-Parchin fine sandy loams, 6 to 15 percent slopes	0.000	0.051	0.044	0.000	0.000	0.127	0.000	0.000	0.108
Steele City	MT	Harding	343.037	343.450	0.413	SD063	Assinniboine-Archin fine sandy loams, 0 to 3 percent slopes	0.000	0.000	0.153	0.000	0.000	0.413	0.029	0.000	0.236
Steele City	MT	Harding	343.450	343.509	0.059	SD063	Parchin-Bullock fine sandy loams, 2 to 9 percent	0.000	0.009	0.051	0.000	0.000	0.059	0.000	0.000	0.031

Appendix K – Soils by Milepost – Steele City Segment

Pipeline Segment	State	County	Beginning Milepost	Ending Milepost	Miles	Soil Series	Soil Series Name	Wind (miles)	Water (miles)	Low revegetation on Potential (miles)	Prime Farmland (miles)	Hydric Soils (miles)	Compaction on Prone (miles)	Stoney – Rocky (miles)	Shallow Bedrock (miles)	Droghty (miles)
							slopes									
Steele City	MT	Harding	343.509	343.596	0.087	SD063	Rhame-Parchin fine sandy loams, 2 to 6 percent slopes	0.000	0.009	0.039	0.000	0.000	0.087	0.000	0.000	0.022
Steele City	MT	Harding	343.596	343.851	0.255	SD063	Bullock-Parchin-Slickspots complex, 2 to 9 percent slopes	0.000	0.008	0.204	0.000	0.000	0.255	0.000	0.000	0.099
Steele City	MT	Harding	343.851	343.909	0.058	SD063	Twilight fine sandy loam, 6 to 9 percent slopes	0.000	0.007	0.005	0.000	0.000	0.058	0.000	0.000	0.053
Steele City	MT	Harding	343.909	344.174	0.265	SD063	Parchin-Bullock fine sandy loams, 2 to 9 percent slopes	0.000	0.040	0.228	0.000	0.000	0.265	0.000	0.000	0.140
Steele City	MT	Harding	344.174	344.183	0.010	SD063	Bullock-Parchin-Slickspots complex, 2 to 9 percent slopes	0.000	0.000	0.008	0.000	0.000	0.010	0.000	0.000	0.004
Steele City	MT	Harding	344.183	344.385	0.202	SD063	Parchin-Bullock fine sandy loams, 2 to 9 percent slopes	0.000	0.030	0.174	0.000	0.000	0.202	0.000	0.000	0.107
Steele City	MT	Harding	344.385	344.444	0.059	SD063	Twilight fine sandy loam, 6 to 9 percent slopes	0.000	0.007	0.005	0.000	0.000	0.059	0.000	0.000	0.054
Steele City	MT	Harding	344.444	344.677	0.233	SD063	Parchin-Bullock fine sandy loams, 2 to 9 percent slopes	0.000	0.035	0.201	0.000	0.000	0.233	0.000	0.000	0.124
Steele City	MT	Harding	344.677	344.759	0.082	SD063	Rhame-Parchin fine sandy loams, 2 to 6 percent slopes	0.000	0.008	0.037	0.000	0.000	0.082	0.000	0.000	0.020
Steele City	MT	Harding	344.759	344.952	0.193	SD063	Twilight-Parchin fine sandy loams, 6 to 15 percent slopes	0.000	0.077	0.068	0.000	0.000	0.193	0.000	0.000	0.164
Steele City	MT	Harding	344.952	345.098	0.146	SD063	Chinook fine sandy loam, 0 to 3 percent slopes	0.000	0.000	0.016	0.146	0.000	0.146	0.006	0.000	0.130
Steele City	MT	Harding	345.098	345.228	0.129	SD063	Twilight-Parchin fine sandy loams, 6 to 15 percent slopes	0.000	0.052	0.045	0.000	0.000	0.129	0.000	0.000	0.110
Steele City	MT	Harding	345.228	346.046	0.818	SD063	Rhame-Parchin fine sandy loams, 2 to 6 percent slopes	0.000	0.082	0.368	0.000	0.000	0.818	0.000	0.000	0.205
Steele City	MT	Harding	346.046	346.098	0.052	SD063	Bullock-Parchin-Slickspots complex, 2 to 9 percent slopes	0.000	0.002	0.041	0.000	0.000	0.052	0.000	0.000	0.020
Steele City	MT	Harding	346.098	346.121	0.024	SD063	Bullock-Slickspots complex, 0 to 4 percent slopes	0.000	0.000	0.021	0.000	0.000	0.024	0.000	0.000	0.003
Steele City	MT	Harding	346.121	346.274	0.153	SD063	Bullock-Parchin-Slickspots complex, 2 to 9 percent slopes	0.000	0.005	0.122	0.000	0.000	0.153	0.000	0.000	0.060
Steele City	MT	Harding	346.274	346.409	0.135	SD063	Bullock-Slickspots complex, 0 to 4 percent slopes	0.000	0.000	0.119	0.000	0.000	0.135	0.000	0.000	0.015
Steele City	MT	Harding	346.409	346.507	0.098	SD063	Bullock-Parchin-Slickspots complex, 2 to 9 percent slopes	0.000	0.003	0.078	0.000	0.000	0.098	0.000	0.000	0.038
Steele City	MT	Harding	346.507	346.551	0.044	SD063	Twilight-Parchin fine sandy loams, 6 to 15 percent slopes	0.000	0.017	0.015	0.000	0.000	0.044	0.000	0.000	0.037
Steele City	MT	Harding	346.551	346.622	0.072	SD063	Rhame-Parchin fine sandy loams, 2 to 6 percent slopes	0.000	0.007	0.032	0.000	0.000	0.072	0.000	0.000	0.018
Steele City	MT	Harding	346.622	346.643	0.021	SD063	Twilight-Parchin fine sandy loams, 6 to 15 percent slopes	0.000	0.008	0.007	0.000	0.000	0.021	0.000	0.000	0.018
Steele City	MT	Harding	346.643	346.760	0.117	SD063	Bullock-Cabbart complex, 6 to 25 percent slopes	0.000	0.111	0.065	0.000	0.000	0.117	0.000	0.000	0.000
Steele City	MT	Harding	346.760	346.822	0.062	SD063	Twilight-Blackhall fine sandy loams, 9 to 25 percent slopes	0.000	0.025	0.022	0.000	0.000	0.062	0.000	0.000	0.040
Steele City	MT	Harding	346.822	346.900	0.078	SD063	Twilight-Parchin fine sandy loams, 6 to 15 percent slopes	0.000	0.031	0.027	0.000	0.000	0.078	0.000	0.000	0.066
Steele City	MT	Harding	346.900	346.918	0.018	SD063	Hanly loamy fine sand	0.015	0.000	0.002	0.000	0.001	0.018	0.000	0.000	0.015
Steele City	MT	Harding	346.918	347.112	0.195	SD063	Sage loam	0.000	0.000	0.195	0.000	0.165	0.195	0.000	0.000	0.000
Steele City	MT	Harding	347.112	347.216	0.103	SD063	Twilight-Blackhall fine sandy loams, 9 to 25 percent	0.000	0.041	0.036	0.000	0.000	0.103	0.000	0.000	0.067

Appendix K – Soils by Milepost – Steele City Segment

Pipeline Segment	State	County	Beginning Milepost	Ending Milepost	Miles	Soil Series	Soil Series Name	Wind (miles)	Water (miles)	Low revegetation on Potential (miles)	Prime Farmland (miles)	Hydric Soils (miles)	Compaction on Prone (miles)	Stoney – Rocky (miles)	Shallow Bedrock (miles)	Droghty (miles)
							slopes									
Steele City	MT	Harding	347.216	347.539	0.324	SD063	Bullock-Cabbart complex, 6 to 25 percent slopes	0.000	0.308	0.181	0.000	0.000	0.324	0.000	0.000	0.000
Steele City	MT	Harding	347.539	347.659	0.120	SD063	Twilight-Blackhall fine sandy loams, 9 to 25 percent slopes	0.000	0.048	0.042	0.000	0.000	0.120	0.000	0.000	0.078
Steele City	MT	Harding	347.659	347.729	0.070	SD063	Bullock-Cabbart complex, 6 to 25 percent slopes	0.000	0.066	0.039	0.000	0.000	0.070	0.000	0.000	0.000
Steele City	MT	Harding	347.729	347.810	0.082	SD063	Cabbart-Delridge loams, 15 to 40 percent slopes	0.000	0.075	0.007	0.000	0.000	0.082	0.002	0.000	0.002
Steele City	MT	Harding	347.810	347.985	0.175	SD063	Cabbart-Rock outcrop complex, 15 to 40 percent slopes	0.000	0.166	0.014	0.000	0.000	0.175	0.049	0.044	0.000
Steele City	MT	Harding	347.985	348.131	0.146	SD063	Archin-Bullock fine sandy loams, 0 to 4 percent slopes	0.000	0.000	0.127	0.000	0.000	0.146	0.000	0.000	0.019
Steele City	MT	Harding	348.131	348.143	0.012	SD063	Chinook-Archin fine sandy loams, 0 to 3 percent slopes	0.000	0.000	0.005	0.000	0.000	0.012	0.001	0.000	0.007
Steele City	MT	Harding	348.143	348.166	0.023	SD063	Bullock-Cabbart complex, 6 to 25 percent slopes	0.000	0.022	0.013	0.000	0.000	0.023	0.000	0.000	0.000
Steele City	MT	Harding	348.166	348.219	0.053	SD063	Cabbart-Rock outcrop complex, 15 to 40 percent slopes	0.000	0.051	0.004	0.000	0.000	0.053	0.015	0.013	0.000
Steele City	MT	Harding	348.219	348.300	0.081	SD063	Chinook-Archin fine sandy loams, 0 to 3 percent slopes	0.000	0.000	0.032	0.000	0.000	0.081	0.004	0.000	0.049
Steele City	MT	Harding	348.300	348.588	0.288	SD063	Archin-Bullock fine sandy loams, 0 to 4 percent slopes	0.000	0.000	0.250	0.000	0.000	0.288	0.000	0.000	0.037
Steele City	MT	Harding	348.588	348.788	0.200	SD063	Parchin-Bullock fine sandy loams, 2 to 9 percent slopes	0.000	0.030	0.172	0.000	0.000	0.200	0.000	0.000	0.106
Steele City	MT	Harding	348.788	348.859	0.071	SD063	Twilight-Blackhall fine sandy loams, 9 to 25 percent slopes	0.000	0.028	0.025	0.000	0.000	0.071	0.000	0.000	0.046
Steele City	MT	Harding	348.859	349.206	0.347	SD063	Parchin-Bullock fine sandy loams, 2 to 9 percent slopes	0.000	0.052	0.299	0.000	0.000	0.347	0.000	0.000	0.184
Steele City	MT	Harding	349.206	349.229	0.023	SD063	Trey-Parchin-Bullock complex, 2 to 9 percent slopes	0.010	0.001	0.011	0.000	0.000	0.023	0.000	0.000	0.017
Steele City	MT	Harding	349.229	349.529	0.300	SD063	Parchin-Bullock fine sandy loams, 2 to 9 percent slopes	0.000	0.045	0.258	0.000	0.000	0.300	0.000	0.000	0.159
Steele City	MT	Harding	349.529	349.628	0.098	SD063	Bullock fine sandy loam, 6 to 20 percent slopes, extremely stony	0.000	0.089	0.090	0.000	0.000	0.098	0.083	0.000	0.002
Steele City	MT	Harding	349.628	349.666	0.038	SD063	Twilight-Parchin fine sandy loams, 6 to 15 percent slopes	0.000	0.015	0.013	0.000	0.000	0.038	0.000	0.000	0.033
Steele City	MT	Harding	349.666	349.714	0.048	SD063	Cabbart loam, 6 to 60 percent slopes, extremely stony	0.000	0.044	0.041	0.000	0.000	0.048	0.038	0.000	0.002
Steele City	MT	Harding	349.714	350.189	0.476	SD063	Twilight-Parchin fine sandy loams, 6 to 15 percent slopes	0.000	0.190	0.167	0.000	0.000	0.476	0.000	0.000	0.404
Steele City	MT	Harding	350.189	350.298	0.109	SD063	Korchea-Archin complex	0.000	0.000	0.047	0.000	0.000	0.109	0.000	0.000	0.000
Steele City	MT	Harding	350.298	350.329	0.031	SD063	Cabbart-Rock outcrop complex, 15 to 40 percent slopes	0.000	0.030	0.003	0.000	0.000	0.031	0.009	0.008	0.000
Steele City	MT	Harding	350.329	350.345	0.016	SD063	Twilight-Blackhall fine sandy loams, 9 to 25 percent slopes	0.000	0.006	0.006	0.000	0.000	0.016	0.000	0.000	0.010
Steele City	MT	Harding	350.345	350.520	0.175	SD063	Rhoades-Daglum loams, 2 to 9 percent slopes	0.000	0.159	0.154	0.000	0.000	0.175	0.000	0.000	0.000
Steele City	MT	Harding	350.520	350.891	0.371	SD063	Bullock-Parchin-Slickspots complex, 2 to 9 percent slopes	0.000	0.011	0.297	0.000	0.000	0.371	0.000	0.000	0.145
Steele City	MT	Harding	350.891	351.063	0.171	SD063	Rhame-Parchin fine sandy loams, 2 to 6 percent slopes	0.000	0.017	0.077	0.000	0.000	0.171	0.000	0.000	0.043

Appendix K – Soils by Milepost – Steele City Segment

Pipeline Segment	State	County	Beginning Milepost	Ending Milepost	Miles	Soil Series	Soil Series Name	Wind (miles)	Water (miles)	Low revegetation on Potential (miles)	Prime Farmland (miles)	Hydric Soils (miles)	Compaction on Prone (miles)	Stoney – Rocky (miles)	Shallow Bedrock (miles)	Droghty (miles)
Steele City	MT	Harding	351.063	351.245	0.182	SD063	Bullock-Slickspots complex, 0 to 4 percent slopes	0.000	0.000	0.160	0.000	0.000	0.182	0.000	0.000	0.020
Steele City	MT	Harding	351.245	351.277	0.033	SD063	Parchin-Bullock fine sandy loams, 2 to 9 percent slopes	0.000	0.005	0.028	0.000	0.000	0.033	0.000	0.000	0.017
Steele City	MT	Harding	351.277	351.405	0.128	SD063	Rhame-Parchin fine sandy loams, 2 to 6 percent slopes	0.000	0.013	0.058	0.000	0.000	0.128	0.000	0.000	0.032
Steele City	MT	Harding	351.405	351.567	0.162	SD063	Bullock-Parchin-Slickspots complex, 2 to 9 percent slopes	0.000	0.005	0.130	0.000	0.000	0.162	0.000	0.000	0.063
Steele City	MT	Harding	351.567	351.595	0.027	SD063	Parchin-Bullock fine sandy loams, 2 to 9 percent slopes	0.000	0.004	0.023	0.000	0.000	0.027	0.000	0.000	0.014
Steele City	MT	Harding	351.595	351.672	0.077	SD063	Bullock-Parchin-Slickspots complex, 2 to 9 percent slopes	0.000	0.002	0.062	0.000	0.000	0.077	0.000	0.000	0.030
Steele City	MT	Harding	351.672	352.111	0.439	SD063	Rhame-Parchin fine sandy loams, 2 to 6 percent slopes	0.000	0.044	0.198	0.000	0.000	0.439	0.000	0.000	0.110
Steele City	MT	Harding	352.111	352.152	0.041	SD063	Parchin-Bullock fine sandy loams, 2 to 9 percent slopes	0.000	0.006	0.035	0.000	0.000	0.041	0.000	0.000	0.022
Steele City	MT	Harding	352.152	352.219	0.067	SD063	Rhame-Parchin fine sandy loams, 2 to 6 percent slopes	0.000	0.007	0.030	0.000	0.000	0.067	0.000	0.000	0.017
Steele City	MT	Harding	352.219	352.293	0.074	SD063	Twilight-Blackhall fine sandy loams, 9 to 25 percent slopes	0.000	0.030	0.026	0.000	0.000	0.074	0.000	0.000	0.048
Steele City	MT	Harding	352.293	352.359	0.066	SD063	Cabbart-Rock outcrop complex, 15 to 40 percent slopes	0.000	0.063	0.005	0.000	0.000	0.066	0.019	0.017	0.000
Steele City	MT	Harding	352.359	352.511	0.153	SD063	Rhame-Parchin fine sandy loams, 2 to 6 percent slopes	0.000	0.015	0.069	0.000	0.000	0.153	0.000	0.000	0.038
Steele City	MT	Harding	352.511	352.547	0.036	SD063	Bullock-Parchin-Slickspots complex, 2 to 9 percent slopes	0.000	0.001	0.029	0.000	0.000	0.036	0.000	0.000	0.014
Steele City	MT	Harding	352.547	352.697	0.150	SD063	Rhame-Parchin fine sandy loams, 2 to 6 percent slopes	0.000	0.015	0.067	0.000	0.000	0.150	0.000	0.000	0.037
Steele City	MT	Harding	352.697	352.721	0.024	SD063	Bullock-Parchin-Slickspots complex, 2 to 9 percent slopes	0.000	0.001	0.019	0.000	0.000	0.024	0.000	0.000	0.009
Steele City	MT	Harding	352.721	353.014	0.293	SD063	Rhame-Parchin fine sandy loams, 2 to 6 percent slopes	0.000	0.029	0.132	0.000	0.000	0.293	0.000	0.000	0.073
Steele City	MT	Harding	353.014	353.169	0.155	SD063	Bullock-Cabbart complex, 6 to 25 percent slopes	0.000	0.147	0.087	0.000	0.000	0.155	0.000	0.000	0.000
Steele City	MT	Harding	353.169	353.226	0.057	SD063	Trey-Fleak loamy fine sands, 2 to 15 percent slopes	0.043	0.010	0.010	0.000	0.000	0.057	0.000	0.000	0.052
Steele City	MT	Harding	353.226	353.300	0.074	SD063	Bullock-Cabbart complex, 6 to 25 percent slopes	0.000	0.070	0.041	0.000	0.000	0.074	0.000	0.000	0.000
Steele City	MT	Harding	353.300	353.335	0.035	SD063	Twilight-Blackhall fine sandy loams, 9 to 25 percent slopes	0.000	0.014	0.012	0.000	0.000	0.035	0.000	0.000	0.023
Steele City	MT	Harding	353.335	353.372	0.038	SD063	Bullock-Cabbart complex, 6 to 25 percent slopes	0.000	0.036	0.021	0.000	0.000	0.038	0.000	0.000	0.000
Steele City	MT	Harding	353.372	353.618	0.246	SD063	Rhame-Parchin fine sandy loams, 2 to 6 percent slopes	0.000	0.025	0.111	0.000	0.000	0.246	0.000	0.000	0.061
Steele City	MT	Harding	353.618	353.643	0.025	SD063	Archin-Bullock fine sandy loams, 0 to 4 percent slopes	0.000	0.000	0.022	0.000	0.000	0.025	0.000	0.000	0.003
Steele City	MT	Harding	353.643	353.665	0.022	SD063	Bullock-Slickspots complex, 0 to 4 percent slopes	0.000	0.000	0.019	0.000	0.000	0.022	0.000	0.000	0.002
Steele City	MT	Butte	353.665	353.735	0.070	SD019	Absher-Slickspots complex, 0 to 9 percent slopes	0.000	0.038	0.061	0.000	0.000	0.070	0.000	0.000	0.006
Steele City	MT	Butte	353.735	353.856	0.121	SD019	Zeona loamy fine sand, 0 to 6 percent slopes	0.097	0.000	0.024	0.000	0.000	0.121	0.000	0.000	0.097
Steele City	MT	Butte	353.856	354.054	0.198	SD019	Absher-Slickspots complex, 0 to 9 percent slopes	0.000	0.107	0.175	0.000	0.000	0.198	0.000	0.000	0.016
Steele City	MT	Butte	354.054	354.081	0.027	SD019	Zeona loamy fine sand, 0 to 6 percent slopes	0.021	0.000	0.005	0.000	0.000	0.027	0.000	0.000	0.021

Appendix K – Soils by Milepost – Steele City Segment

Pipeline Segment	State	County	Beginning Milepost	Ending Milepost	Miles	Soil Series	Soil Series Name	Wind (miles)	Water (miles)	Low revegetation on Potential (miles)	Prime Farmland (miles)	Hydric Soils (miles)	Compaction on Prone (miles)	Stoney – Rocky (miles)	Shallow Bedrock (miles)	Droghty (miles)
Steele City	MT	Butte	354.081	354.130	0.049	SD019	Absher-Slickspots complex, 0 to 9 percent slopes	0.000	0.027	0.043	0.000	0.000	0.049	0.000	0.000	0.004
Steele City	MT	Butte	354.130	354.376	0.246	SD019	Zeona loamy fine sand, 0 to 6 percent slopes	0.197	0.000	0.049	0.000	0.000	0.246	0.000	0.000	0.197
Steele City	MT	Butte	354.376	354.519	0.143	SD019	Badland	0.000	0.132	0.011	0.000	0.000	0.143	0.107	0.000	0.013
Steele City	MT	Butte	354.519	354.708	0.189	SD019	Twilight fine sandy loam, 3 to 25 percent slopes	0.000	0.161	0.038	0.000	0.000	0.189	0.000	0.000	0.151
Steele City	MT	Butte	354.708	355.000	0.292	SD019	Badland	0.000	0.268	0.023	0.000	0.000	0.292	0.219	0.000	0.026
Steele City	MT	Butte	355.000	355.413	0.413	SD019	Sorum fine sandy loam, 0 to 6 percent slopes	0.000	0.000	0.351	0.000	0.000	0.413	0.000	0.000	0.041
Steele City	MT	Butte	355.413	355.476	0.063	SD019	Archin-Slickspots complex, 0 to 3 percent slopes	0.000	0.000	0.059	0.000	0.000	0.063	0.000	0.000	0.003
Steele City	MT	Butte	355.476	355.673	0.197	SD019	Twilight fine sandy loam, 3 to 25 percent slopes	0.000	0.168	0.039	0.000	0.000	0.197	0.000	0.000	0.158
Steele City	MT	Butte	355.673	355.993	0.320	SD019	Sorum fine sandy loam, 0 to 6 percent slopes	0.000	0.000	0.272	0.000	0.000	0.320	0.000	0.000	0.032
Steele City	MT	Butte	355.993	356.052	0.059	SD019	Twilight-Blackhall fine sandy loams, 6 to 18 percent slopes	0.000	0.054	0.022	0.000	0.000	0.059	0.000	0.000	0.034
Steele City	MT	Butte	356.052	356.168	0.116	SD019	Sorum fine sandy loam, 0 to 6 percent slopes	0.000	0.000	0.098	0.000	0.000	0.116	0.000	0.000	0.012
Steele City	MT	Butte	356.168	356.265	0.097	SD019	Hanly loamy fine sand,	0.087	0.000	0.005	0.000	0.005	0.097	0.000	0.000	0.087
Steele City	MT	Butte	356.265	357.241	0.976	SD019	Zeona loamy fine sand, 0 to 6 percent slopes	0.781	0.000	0.195	0.000	0.000	0.976	0.000	0.000	0.781
Steele City	MT	Butte	357.241	357.302	0.061	SD019	Archin-Slickspots complex, 0 to 3 percent slopes	0.000	0.000	0.057	0.000	0.000	0.061	0.000	0.000	0.002
Steele City	MT	Butte	357.302	357.367	0.065	SD019	Badland	0.000	0.060	0.005	0.000	0.000	0.065	0.049	0.000	0.006
Steele City	MT	Butte	357.367	357.398	0.030	SD019	Twilight fine sandy loam, 3 to 25 percent slopes	0.000	0.026	0.006	0.000	0.000	0.030	0.000	0.000	0.024
Steele City	SD	Perkins	357.398	357.429	0.032	SD105	Twilight-Marmarth-Parchin association, gently rolling	0.000	0.010	0.010	0.000	0.000	0.032	0.000	0.000	0.021
Steele City	SD	Perkins	357.429	357.522	0.093	SD105	Bullock-Slickspots complex, 0 to 15 percent slopes	0.000	0.011	0.083	0.000	0.000	0.093	0.000	0.000	0.003
Steele City	SD	Perkins	357.522	357.959	0.436	SD105	Twilight-Marmarth-Parchin association, gently rolling	0.000	0.135	0.144	0.000	0.004	0.436	0.000	0.000	0.284
Steele City	SD	Perkins	357.959	358.138	0.180	SD105	Bullock-Slickspots complex, 0 to 15 percent slopes	0.000	0.022	0.160	0.000	0.000	0.180	0.000	0.000	0.005
Steele City	SD	Perkins	358.138	358.176	0.037	SD105	Twilight-Marmarth-Parchin association, gently rolling	0.000	0.012	0.012	0.000	0.000	0.037	0.000	0.000	0.024
Steele City	SD	Perkins	358.176	358.214	0.038	SD105	Bullock-Slickspots complex, 0 to 15 percent slopes	0.000	0.005	0.034	0.000	0.000	0.038	0.000	0.000	0.001
Steele City	SD	Perkins	358.214	358.330	0.116	SD105	Twilight-Marmarth-Parchin association, gently rolling	0.000	0.036	0.038	0.000	0.001	0.116	0.000	0.000	0.076
Steele City	SD	Perkins	358.330	359.258	0.928	SD105	Bullock-Slickspots complex, 0 to 15 percent slopes	0.000	0.111	0.825	0.000	0.000	0.928	0.000	0.000	0.028
Steele City	SD	Perkins	359.258	359.523	0.266	SD105	Twilight-Marmarth-Parchin association, gently rolling	0.000	0.082	0.088	0.000	0.003	0.266	0.000	0.000	0.173
Steele City	SD	Perkins	359.523	359.596	0.073	SD105	Bullock-Slickspots complex, 0 to 15 percent slopes	0.000	0.009	0.065	0.000	0.000	0.073	0.000	0.000	0.002
Steele City	SD	Perkins	359.596	359.794	0.198	SD105	Bullock-Parchin loams, 0 to 9 percent slopes	0.000	0.000	0.188	0.000	0.000	0.198	0.000	0.000	0.059
Steele City	SD	Perkins	359.794	359.823	0.029	SD105	Twilight-Marmarth-Parchin association, gently rolling	0.000	0.009	0.010	0.000	0.000	0.029	0.000	0.000	0.019
Steele City	SD	Perkins	359.823	359.914	0.091	SD105	Bullock-Parchin loams, 0 to 9 percent slopes	0.000	0.000	0.086	0.000	0.000	0.091	0.000	0.000	0.027
Steele City	SD	Perkins	359.914	360.333	0.419	SD105	Twilight-Marmarth-Parchin association, gently rolling	0.000	0.130	0.138	0.000	0.004	0.419	0.000	0.000	0.272
Steele City	SD	Perkins	360.333	360.416	0.084	SD105	Bullock-Parchin loams, 0 to 9 percent slopes	0.000	0.000	0.079	0.000	0.000	0.084	0.000	0.000	0.025
Steele City	SD	Perkins	360.416	360.426	0.009	SD105	Twilight-Marmarth-Parchin association, gently rolling	0.000	0.003	0.003	0.000	0.000	0.009	0.000	0.000	0.006
Steele City	SD	Perkins	360.426	360.465	0.040	SD105	Bullock-Parchin loams, 0 to 9 percent slopes	0.000	0.000	0.038	0.000	0.000	0.040	0.000	0.000	0.012
Steele City	SD	Perkins	360.465	360.700	0.235	SD105	Twilight-Marmarth-Parchin association, gently rolling	0.000	0.073	0.077	0.000	0.002	0.235	0.000	0.000	0.153
Steele City	SD	Perkins	360.700	360.728	0.028	SD105	Bullock-Parchin loams, 0 to 9 percent slopes	0.000	0.000	0.026	0.000	0.000	0.028	0.000	0.000	0.008
Steele City	SD	Perkins	360.728	360.884	0.157	SD105	Twilight-Marmarth-Parchin association, gently rolling	0.000	0.049	0.052	0.000	0.002	0.157	0.000	0.000	0.102
Steele City	SD	Perkins	360.884	361.144	0.260	SD105	Bullock-Parchin loams, 0 to 9 percent slopes	0.000	0.000	0.247	0.000	0.000	0.260	0.000	0.000	0.078
Steele City	SD	Perkins	361.144	361.172	0.028	SD105	Twilight-Marmarth-Parchin association, gently rolling	0.000	0.009	0.009	0.000	0.000	0.028	0.000	0.000	0.018
Steele City	SD	Perkins	361.172	361.284	0.112	SD105	Bullock-Parchin loams, 0 to 9 percent slopes	0.000	0.000	0.107	0.000	0.000	0.112	0.000	0.000	0.034
Steele City	SD	Perkins	361.284	361.305	0.021	SD105	Bullock-Slickspots complex, 0 to 15 percent slopes	0.000	0.003	0.019	0.000	0.000	0.021	0.000	0.000	0.001
Steele City	SD	Perkins	361.305	361.351	0.046	SD105	Bullock-Parchin loams, 0 to 9 percent slopes	0.000	0.000	0.043	0.000	0.000	0.046	0.000	0.000	0.014
Steele City	SD	Perkins	361.351	361.458	0.108	SD105	Bullock-Slickspots complex, 0 to 15 percent slopes	0.000	0.013	0.096	0.000	0.000	0.108	0.000	0.000	0.003
Steele City	SD	Perkins	361.458	361.607	0.149	SD105	Bullock-Parchin loams, 0 to 9 percent slopes	0.000	0.000	0.141	0.000	0.000	0.149	0.000	0.000	0.045
Steele City	SD	Perkins	361.607	361.748	0.141	SD105	Shambo loam, channeled	0.000	0.000	0.011	0.000	0.001	0.141	0.010	0.000	0.010

Appendix K – Soils by Milepost – Steele City Segment

Pipeline Segment	State	County	Beginning Milepost	Ending Milepost	Miles	Soil Series	Soil Series Name	Wind (miles)	Water (miles)	Low revegetation on Potential (miles)	Prime Farmland (miles)	Hydric Soils (miles)	Compaction on Prone (miles)	Stoney – Rocky (miles)	Shallow Bedrock (miles)	Droghty (miles)
Steele City	SD	Perkins	361.748	362.022	0.274	SD105	Bullock-Parchin loams, 0 to 9 percent slopes	0.000	0.000	0.261	0.000	0.000	0.274	0.000	0.000	0.082
Steele City	SD	Perkins	362.022	362.207	0.185	SD105	Twilight-Marmarth-Parchin association, gently rolling	0.000	0.057	0.061	0.000	0.002	0.185	0.000	0.000	0.120
Steele City	SD	Perkins	362.207	362.434	0.227	SD105	Bullock-Parchin loams, 0 to 9 percent slopes	0.000	0.000	0.215	0.000	0.000	0.227	0.000	0.000	0.068
Steele City	SD	Perkins	362.434	362.533	0.099	SD105	Bullock-Slickspots complex, 0 to 15 percent slopes	0.000	0.012	0.088	0.000	0.000	0.099	0.000	0.000	0.003
Steele City	SD	Perkins	362.533	362.622	0.090	SD105	Bullock-Parchin loams, 0 to 9 percent slopes	0.000	0.000	0.085	0.000	0.000	0.090	0.000	0.000	0.027
Steele City	SD	Perkins	362.622	362.663	0.041	SD105	Bullock-Slickspots complex, 0 to 15 percent slopes	0.000	0.005	0.036	0.000	0.000	0.041	0.000	0.000	0.001
Steele City	SD	Perkins	362.663	362.871	0.208	SD105	Bullock-Parchin loams, 0 to 9 percent slopes	0.000	0.000	0.197	0.000	0.000	0.208	0.000	0.000	0.062
Steele City	SD	Perkins	362.871	363.113	0.243	SD105	Bullock-Slickspots complex, 0 to 15 percent slopes	0.000	0.029	0.216	0.000	0.000	0.243	0.000	0.000	0.007
Steele City	SD	Perkins	363.113	363.610	0.497	SD105	Bullock-Parchin loams, 0 to 9 percent slopes	0.000	0.000	0.472	0.000	0.000	0.497	0.000	0.000	0.149
Steele City	SD	Perkins	363.610	363.834	0.224	SD105	Wabek sandy loam, 9 to 35 percent slopes	0.000	0.201	0.000	0.000	0.000	0.224	0.212	0.000	0.212
Steele City	SD	Perkins	363.834	364.068	0.235	SD105	Lohler-Trembles complex	0.012	0.000	0.167	0.235	0.002	0.235	0.009	0.000	0.012
Steele City	SD	Perkins	364.068	364.126	0.057	SD105	Trembles fine sandy loam	0.002	0.000	0.003	0.057	0.001	0.057	0.000	0.000	0.002
Steele City	SD	Perkins	364.126	364.257	0.132	SD105	Banks loamy fine sand	0.125	0.000	0.126	0.000	0.001	0.132	0.000	0.000	0.125
Steele City	SD	Perkins	364.257	364.293	0.035	SD105	Trembles fine sandy loam	0.001	0.000	0.002	0.035	0.000	0.035	0.000	0.000	0.001
Steele City	SD	Perkins	364.293	364.451	0.159	SD105	Lohler-Trembles complex	0.008	0.000	0.113	0.159	0.002	0.159	0.006	0.000	0.008
Steele City	SD	Perkins	364.451	364.861	0.410	SD105	Blackhall-Cabbart complex, 15 to 40 percent slopes	0.000	0.348	0.205	0.000	0.000	0.410	0.000	0.000	0.020
Steele City	SD	Perkins	364.861	364.949	0.088	SD105	Bullock-Parchin loams, 0 to 9 percent slopes	0.000	0.000	0.083	0.000	0.000	0.088	0.000	0.000	0.026
Steele City	SD	Perkins	364.949	365.028	0.079	SD105	Bullock-Slickspots complex, 0 to 15 percent slopes	0.000	0.010	0.070	0.000	0.000	0.079	0.000	0.000	0.002
Steele City	SD	Perkins	365.028	365.114	0.086	SD105	Bullock-Parchin loams, 0 to 9 percent slopes	0.000	0.000	0.082	0.000	0.000	0.086	0.000	0.000	0.026
Steele City	SD	Perkins	365.114	365.170	0.057	SD105	Bullock-Slickspots complex, 0 to 15 percent slopes	0.000	0.007	0.050	0.000	0.000	0.057	0.000	0.000	0.002
Steele City	SD	Perkins	365.170	365.374	0.203	SD105	Bullock-Parchin loams, 0 to 9 percent slopes	0.000	0.000	0.193	0.000	0.000	0.203	0.000	0.000	0.061
Steele City	SD	Perkins	365.374	365.385	0.011	SD105	Bullock-Slickspots complex, 0 to 15 percent slopes	0.000	0.001	0.010	0.000	0.000	0.011	0.000	0.000	0.000
Steele City	SD	Perkins	365.385	365.406	0.021	SD105	Bullock-Parchin loams, 0 to 9 percent slopes	0.000	0.000	0.020	0.000	0.000	0.021	0.000	0.000	0.006
Steele City	SD	Perkins	365.406	365.703	0.297	SD105	Bullock-Slickspots complex, 0 to 15 percent slopes	0.000	0.036	0.264	0.000	0.000	0.297	0.000	0.000	0.009
Steele City	SD	Perkins	365.703	365.703	0.001	SD105	Bullock-Parchin loams, 0 to 9 percent slopes	0.000	0.000	0.001	0.000	0.000	0.001	0.000	0.000	0.000
Steele City	SD	Perkins	365.703	365.846	0.142	SD105	Trembles soils, channeled	0.000	0.000	0.014	0.000	0.009	0.142	0.000	0.000	0.000
Steele City	SD	Perkins	365.846	366.011	0.165	SD105	Shambo loam	0.000	0.000	0.000	0.165	0.000	0.165	0.148	0.000	0.005
Steele City	SD	Perkins	366.011	366.242	0.232	SD105	Bullock-Slickspots complex, 0 to 15 percent slopes	0.000	0.028	0.206	0.000	0.000	0.232	0.000	0.000	0.007
Steele City	SD	Perkins	366.242	366.316	0.074	SD105	Twilight-Marmarth-Parchin association, gently rolling	0.000	0.023	0.024	0.000	0.001	0.074	0.000	0.000	0.048
Steele City	SD	Perkins	366.316	366.375	0.059	SD105	Bullock-Slickspots complex, 0 to 15 percent slopes	0.000	0.007	0.053	0.000	0.000	0.059	0.000	0.000	0.002
Steele City	SD	Perkins	366.375	366.439	0.064	SD105	Twilight-Marmarth-Parchin association, gently rolling	0.000	0.020	0.021	0.000	0.001	0.064	0.000	0.000	0.042
Steele City	SD	Perkins	366.439	366.474	0.035	SD105	Bullock-Slickspots complex, 0 to 15 percent slopes	0.000	0.004	0.031	0.000	0.000	0.035	0.000	0.000	0.001
Steele City	SD	Perkins	366.474	366.493	0.020	SD105	Twilight-Marmarth-Parchin association, gently rolling	0.000	0.006	0.006	0.000	0.000	0.020	0.000	0.000	0.013
Steele City	SD	Perkins	366.493	366.929	0.436	SD105	Bullock-Slickspots complex, 0 to 15 percent slopes	0.000	0.052	0.388	0.000	0.000	0.436	0.000	0.000	0.013
Steele City	SD	Perkins	366.929	367.047	0.118	SD105	Twilight-Marmarth-Parchin association, gently rolling	0.000	0.036	0.039	0.000	0.001	0.118	0.000	0.000	0.077
Steele City	SD	Perkins	367.047	367.359	0.313	SD105	Bullock-Slickspots complex, 0 to 15 percent slopes	0.000	0.038	0.278	0.000	0.000	0.313	0.000	0.000	0.009
Steele City	SD	Perkins	367.359	367.629	0.270	SD105	Twilight-Marmarth-Parchin association, gently rolling	0.000	0.084	0.089	0.000	0.003	0.270	0.000	0.000	0.175
Steele City	SD	Perkins	367.629	367.667	0.038	SD105	Bullock-Slickspots complex, 0 to 15 percent slopes	0.000	0.005	0.034	0.000	0.000	0.038	0.000	0.000	0.001
Steele City	SD	Perkins	367.667	367.875	0.208	SD105	Rhoades-Rock outcrop complex, 6 to 20 percent slopes	0.000	0.195	0.123	0.000	0.000	0.208	0.000	0.000	0.000
Steele City	SD	Perkins	367.875	367.908	0.034	SD105	Bullock-Parchin loams, 0 to 9 percent slopes	0.000	0.000	0.032	0.000	0.000	0.034	0.000	0.000	0.010
Steele City	SD	Perkins	367.908	367.952	0.044	SD105	Bullock-Slickspots complex, 0 to 15 percent slopes	0.000	0.005	0.039	0.000	0.000	0.044	0.000	0.000	0.001
Steele City	SD	Perkins	367.952	368.041	0.090	SD105	Bullock-Parchin loams, 0 to 9 percent slopes	0.000	0.000	0.085	0.000	0.000	0.090	0.000	0.000	0.027
Steele City	SD	Perkins	368.041	368.237	0.195	SD105	Bullock-Slickspots complex, 0 to 15 percent slopes	0.000	0.023	0.174	0.000	0.000	0.195	0.000	0.000	0.006
Steele City	SD	Perkins	368.237	368.318	0.082	SD105	Rhoades-Rock outcrop complex, 6 to 20 percent	0.000	0.077	0.048	0.000	0.000	0.082	0.000	0.000	0.000

Appendix K – Soils by Milepost – Steele City Segment

Pipeline Segment	State	County	Beginning Milepost	Ending Milepost	Miles	Soil Series	Soil Series Name	Wind (miles)	Water (miles)	Low revegetation on Potential (miles)	Prime Farmland (miles)	Hydric Soils (miles)	Compaction on Prone (miles)	Stoney – Rocky (miles)	Shallow Bedrock (miles)	Droghty (miles)
							slopes									
Steele City	SD	Perkins	368.318	368.817	0.499	SD105	Bullock-Slickspots complex, 0 to 15 percent slopes	0.000	0.060	0.444	0.000	0.000	0.499	0.000	0.000	0.015
Steele City	SD	Perkins	368.817	368.935	0.118	SD105	Twilight-Marmarth-Parchin association, gently rolling	0.000	0.036	0.039	0.000	0.001	0.118	0.000	0.000	0.076
Steele City	SD	Perkins	368.935	369.014	0.079	SD105	Bullock-Parchin loams, 0 to 9 percent slopes	0.000	0.000	0.075	0.000	0.000	0.079	0.000	0.000	0.024
Steele City	SD	Perkins	369.014	369.142	0.128	SD105	Bullock-Slickspots complex, 0 to 15 percent slopes	0.000	0.015	0.114	0.000	0.000	0.128	0.000	0.000	0.004
Steele City	SD	Perkins	369.142	369.583	0.441	SD105	Bullock-Parchin loams, 0 to 9 percent slopes	0.000	0.000	0.419	0.000	0.000	0.441	0.000	0.000	0.132
Steele City	SD	Perkins	369.583	369.726	0.144	SD105	Blackhall-Cabbart complex, 15 to 40 percent slopes	0.000	0.122	0.072	0.000	0.000	0.144	0.000	0.000	0.007
Steele City	SD	Perkins	369.726	369.824	0.098	SD105	Bullock-Slickspots complex, 0 to 15 percent slopes	0.000	0.012	0.087	0.000	0.000	0.098	0.000	0.000	0.003
Steele City	SD	Perkins	369.824	370.011	0.187	SD105	Twilight-Marmarth-Parchin association, gently rolling	0.000	0.058	0.062	0.000	0.002	0.187	0.000	0.000	0.121
Steele City	SD	Perkins	370.011	370.283	0.272	SD105	Rhoades-Rock outcrop complex, 6 to 20 percent slopes	0.000	0.256	0.160	0.000	0.000	0.272	0.000	0.000	0.000
Steele City	SD	Perkins	370.283	370.339	0.057	SD105	Bullock-Parchin loams, 0 to 9 percent slopes	0.000	0.000	0.054	0.000	0.000	0.057	0.000	0.000	0.017
Steele City	SD	Perkins	370.339	370.511	0.172	SD105	Twilight-Marmarth-Parchin association, gently rolling	0.000	0.053	0.057	0.000	0.002	0.172	0.000	0.000	0.112
Steele City	SD	Perkins	370.511	370.683	0.172	SD105	Bullock-Parchin loams, 0 to 9 percent slopes	0.000	0.000	0.163	0.000	0.000	0.172	0.000	0.000	0.052
Steele City	SD	Perkins	370.683	370.880	0.197	SD105	Blackhall-Cabbart complex, 15 to 40 percent slopes	0.000	0.168	0.099	0.000	0.000	0.197	0.000	0.000	0.010
Steele City	SD	Perkins	370.880	370.935	0.054	SD105	Twilight-Marmarth-Parchin association, gently rolling	0.000	0.017	0.018	0.000	0.001	0.054	0.000	0.000	0.035
Steele City	SD	Perkins	370.935	371.046	0.111	SD105	Blackhall-Cabbart complex, 15 to 40 percent slopes	0.000	0.094	0.055	0.000	0.000	0.111	0.000	0.000	0.006
Steele City	SD	Perkins	371.046	371.164	0.119	SD105	Twilight-Marmarth-Parchin association, gently rolling	0.000	0.037	0.039	0.000	0.001	0.119	0.000	0.000	0.077
Steele City	SD	Perkins	371.164	371.264	0.100	SD105	Blackhall-Cabbart complex, 15 to 40 percent slopes	0.000	0.085	0.050	0.000	0.000	0.100	0.000	0.000	0.005
Steele City	SD	Perkins	371.264	371.392	0.128	SD105	Twilight-Marmarth-Parchin association, gently rolling	0.000	0.040	0.042	0.000	0.001	0.128	0.000	0.000	0.083
Steele City	SD	Perkins	371.392	371.518	0.126	SD105	Blackhall-Cabbart complex, 15 to 40 percent slopes	0.000	0.107	0.063	0.000	0.000	0.126	0.000	0.000	0.006
Steele City	SD	Perkins	371.518	371.585	0.067	SD105	Twilight-Marmarth-Parchin association, gently rolling	0.000	0.021	0.022	0.000	0.001	0.067	0.000	0.000	0.044
Steele City	SD	Perkins	371.585	371.614	0.029	SD105	Regent-Savage silty clay loams, 2 to 6 percent slopes	0.000	0.001	0.028	0.029	0.000	0.029	0.000	0.000	0.000
Steele City	SD	Perkins	371.614	371.670	0.056	SD105	Twilight-Marmarth-Parchin association, gently rolling	0.000	0.017	0.018	0.000	0.001	0.056	0.000	0.000	0.036
Steele City	SD	Perkins	371.670	371.839	0.169	SD105	Regent-Savage silty clay loams, 2 to 6 percent slopes	0.000	0.003	0.160	0.169	0.002	0.169	0.000	0.000	0.000
Steele City	SD	Perkins	371.839	371.962	0.124	SD105	Twilight-Marmarth-Parchin association, gently rolling	0.000	0.038	0.041	0.000	0.001	0.124	0.000	0.000	0.080
Steele City	SD	Perkins	371.962	372.283	0.321	SD105	Regent-Savage silty clay loams, 2 to 6 percent slopes	0.000	0.006	0.304	0.321	0.003	0.321	0.000	0.000	0.000
Steele City	SD	Perkins	372.283	372.347	0.064	SD105	Marmarth loam, 2 to 6 percent slopes	0.000	0.005	0.005	0.064	0.000	0.064	0.000	0.000	0.004
Steele City	SD	Perkins	372.347	372.451	0.104	SD105	Regent-Savage silty clay loams, 2 to 6 percent slopes	0.000	0.002	0.099	0.104	0.001	0.104	0.000	0.000	0.000
Steele City	SD	Perkins	372.451	372.568	0.117	SD105	Marmarth loam, 2 to 6 percent slopes	0.000	0.009	0.009	0.117	0.000	0.117	0.000	0.000	0.008
Steele City	SD	Perkins	372.568	372.593	0.026	SD105	Regent-Savage silty clay loams, 2 to 6 percent slopes	0.000	0.001	0.024	0.026	0.000	0.026	0.000	0.000	0.000
Steele City	SD	Meade	372.593	372.621	0.028	SD601	Tanna-Savo complex, 2 to 6 percent slopes	0.000	0.002	0.017	0.028	0.000	0.028	0.000	0.000	0.000
Steele City	SD	Meade	372.621	372.754	0.132	SD601	Eapa-Grail complex, 2 to 6 percent slopes	0.000	0.000	0.119	0.132	0.000	0.132	0.000	0.000	0.000
Steele City	SD	Meade	372.754	372.943	0.190	SD601	Bullock-Parchin fine sandy loams, 0 to 4 percent slopes	0.000	0.000	0.165	0.000	0.002	0.190	0.000	0.000	0.057
Steele City	SD	Meade	372.943	373.234	0.291	SD601	Twilight-Marmarth-Parchin fine sandy loams, 4 to 9 percent slopes	0.000	0.073	0.102	0.000	0.000	0.291	0.000	0.000	0.058
Steele City	SD	Meade	373.234	373.472	0.238	SD601	Eapa-Delridge loams, 2 to 6 percent slopes	0.000	0.019	0.160	0.238	0.000	0.238	0.000	0.000	0.000
Steele City	SD	Meade	373.472	373.575	0.103	SD601	Eapa-Grail complex, 2 to 6 percent slopes	0.000	0.000	0.093	0.103	0.000	0.103	0.000	0.000	0.000
Steele City	SD	Meade	373.575	373.705	0.129	SD601	Gerdrum loam, 0 to 4 percent slopes	0.000	0.000	0.118	0.000	0.000	0.129	0.000	0.000	0.000

Appendix K – Soils by Milepost – Steele City Segment

Pipeline Segment	State	County	Beginning Milepost	Ending Milepost	Miles	Soil Series	Soil Series Name	Wind (miles)	Water (miles)	Low revegetation on Potential (miles)	Prime Farmland (miles)	Hydric Soils (miles)	Compaction on Prone (miles)	Stoney – Rocky (miles)	Shallow Bedrock (miles)	Droghty (miles)
Steele City	SD	Meade	373.705	374.003	0.299	SD601	Eapa-Grail complex, 2 to 6 percent slopes	0.000	0.000	0.269	0.299	0.000	0.299	0.000	0.000	0.000
Steele City	SD	Meade	374.003	374.058	0.055	SD601	Gerdrum loam, 0 to 4 percent slopes	0.000	0.000	0.050	0.000	0.000	0.055	0.000	0.000	0.000
Steele City	SD	Meade	374.058	374.269	0.211	SD601	Eapa-Delridge loams, 2 to 6 percent slopes	0.000	0.017	0.141	0.211	0.000	0.211	0.000	0.000	0.000
Steele City	SD	Meade	374.269	374.476	0.207	SD601	Parchin-Bullock fine sandy loams, 2 to 6 percent slopes	0.000	0.000	0.186	0.000	0.000	0.207	0.000	0.000	0.124
Steele City	SD	Meade	374.476	374.567	0.091	SD601	Eapa-Grail complex, 2 to 6 percent slopes	0.000	0.000	0.082	0.091	0.000	0.091	0.000	0.000	0.000
Steele City	SD	Meade	374.567	374.615	0.049	SD601	Parchin-Bullock fine sandy loams, 2 to 6 percent slopes	0.000	0.000	0.044	0.000	0.000	0.049	0.000	0.000	0.029
Steele City	SD	Meade	374.615	374.738	0.122	SD601	Tanna-Savo complex, 6 to 9 percent slopes	0.000	0.122	0.074	0.000	0.000	0.122	0.000	0.000	0.000
Steele City	SD	Meade	374.738	374.959	0.222	SD601	Eapa-Grail complex, 2 to 6 percent slopes	0.000	0.000	0.199	0.222	0.000	0.222	0.000	0.000	0.000
Steele City	SD	Meade	374.959	375.262	0.303	SD601	Parchin-Bullock fine sandy loams, 2 to 6 percent slopes	0.000	0.000	0.273	0.000	0.000	0.303	0.000	0.000	0.182
Steele City	SD	Meade	375.262	375.290	0.028	SD601	Twilight-Marmarth-Parchin fine sandy loams, 4 to 9 percent slopes	0.000	0.007	0.010	0.000	0.000	0.028	0.000	0.000	0.006
Steele City	SD	Meade	375.290	375.321	0.032	SD601	Bullock-Parchin fine sandy loams, 0 to 4 percent slopes	0.000	0.000	0.027	0.000	0.000	0.032	0.000	0.000	0.009
Steele City	SD	Meade	375.321	375.861	0.540	SD601	Twilight-Marmarth-Parchin fine sandy loams, 4 to 9 percent slopes	0.000	0.135	0.189	0.000	0.000	0.540	0.000	0.000	0.108
Steele City	SD	Meade	375.861	376.108	0.247	SD601	Bullock-Parchin fine sandy loams, 0 to 4 percent slopes	0.000	0.000	0.215	0.000	0.002	0.247	0.000	0.000	0.074
Steele City	SD	Meade	376.108	376.133	0.025	SD601	Parchin-Bullock fine sandy loams, 2 to 6 percent slopes	0.000	0.000	0.023	0.000	0.000	0.025	0.000	0.000	0.015
Steele City	SD	Meade	376.133	376.180	0.048	SD601	Bullock-Slickspots complex, 0 to 4 percent slopes	0.000	0.000	0.044	0.000	0.000	0.048	0.000	0.000	0.001
Steele City	SD	Meade	376.180	376.696	0.516	SD601	Parchin-Bullock fine sandy loams, 2 to 6 percent slopes	0.000	0.000	0.464	0.000	0.000	0.516	0.000	0.000	0.310
Steele City	SD	Meade	376.696	376.759	0.063	SD601	Bullock-Parchin fine sandy loams, 0 to 4 percent slopes	0.000	0.000	0.055	0.000	0.001	0.063	0.000	0.000	0.019
Steele City	SD	Meade	376.759	376.852	0.093	SD601	Parchin-Bullock fine sandy loams, 2 to 6 percent slopes	0.000	0.000	0.084	0.000	0.000	0.093	0.000	0.000	0.056
Steele City	SD	Meade	376.852	376.928	0.076	SD601	Bullock-Parchin fine sandy loams, 0 to 4 percent slopes	0.000	0.000	0.066	0.000	0.001	0.076	0.000	0.000	0.023
Steele City	SD	Meade	376.928	377.086	0.159	SD601	Parchin-Bullock fine sandy loams, 2 to 6 percent slopes	0.000	0.000	0.143	0.000	0.000	0.159	0.000	0.000	0.095
Steele City	SD	Meade	377.086	377.189	0.103	SD601	Bullock-Parchin fine sandy loams, 0 to 4 percent slopes	0.000	0.000	0.090	0.000	0.001	0.103	0.000	0.000	0.031
Steele City	SD	Meade	377.189	377.425	0.236	SD601	Parchin-Bullock fine sandy loams, 2 to 6 percent slopes	0.000	0.000	0.212	0.000	0.000	0.236	0.000	0.000	0.142
Steele City	SD	Meade	377.425	377.505	0.079	SD601	Bullock-Parchin fine sandy loams, 0 to 4 percent slopes	0.000	0.000	0.069	0.000	0.001	0.079	0.000	0.000	0.024
Steele City	SD	Meade	377.505	377.641	0.136	SD601	Twilight-Marmarth-Parchin fine sandy loams, 4 to 9 percent slopes	0.000	0.034	0.048	0.000	0.000	0.136	0.000	0.000	0.027
Steele City	SD	Meade	377.641	377.694	0.053	SD601	Bullock-Parchin fine sandy loams, 0 to 4 percent slopes	0.000	0.000	0.046	0.000	0.001	0.053	0.000	0.000	0.016
Steele City	SD	Meade	377.694	377.770	0.077	SD601	Twilight-Marmarth-Parchin fine sandy loams, 4 to 9 percent slopes	0.000	0.019	0.027	0.000	0.000	0.077	0.000	0.000	0.015
Steele City	SD	Meade	377.770	377.849	0.079	SD601	Bullock-Parchin fine sandy loams, 0 to 4 percent	0.000	0.000	0.068	0.000	0.001	0.079	0.000	0.000	0.024

Appendix K – Soils by Milepost – Steele City Segment

Pipeline Segment	State	County	Beginning Milepost	Ending Milepost	Miles	Soil Series	Soil Series Name	Wind (miles)	Water (miles)	Low revegetation on Potential (miles)	Prime Farmland (miles)	Hydric Soils (miles)	Compaction on Prone (miles)	Stoney – Rocky (miles)	Shallow Bedrock (miles)	Droghty (miles)
							slopes									
Steele City	SD	Meade	377.849	377.860	0.011	SD601	Twilight-Marmarth-Parchin fine sandy loams, 4 to 9 percent slopes	0.000	0.003	0.004	0.000	0.000	0.011	0.000	0.000	0.002
Steele City	SD	Meade	377.860	377.933	0.073	SD601	Bullock-Parchin fine sandy loams, 0 to 4 percent slopes	0.000	0.000	0.064	0.000	0.001	0.073	0.000	0.000	0.022
Steele City	SD	Meade	377.933	378.092	0.160	SD601	Parchin-Bullock fine sandy loams, 2 to 6 percent slopes	0.000	0.000	0.144	0.000	0.000	0.160	0.000	0.000	0.096
Steele City	SD	Meade	378.092	378.438	0.345	SD601	Bullock-Slickspots complex, 0 to 4 percent slopes	0.000	0.000	0.318	0.000	0.003	0.345	0.000	0.000	0.010
Steele City	SD	Meade	378.438	378.629	0.191	SD601	Twilight-Marmarth-Parchin fine sandy loams, 4 to 9 percent slopes	0.000	0.048	0.067	0.000	0.000	0.191	0.000	0.000	0.038
Steele City	SD	Meade	378.629	378.754	0.125	SD601	Parchin-Bullock fine sandy loams, 2 to 6 percent slopes	0.000	0.000	0.113	0.000	0.000	0.125	0.000	0.000	0.075
Steele City	SD	Meade	378.754	378.781	0.026	SD601	Twilight-Marmarth-Parchin fine sandy loams, 4 to 9 percent slopes	0.000	0.007	0.009	0.000	0.000	0.026	0.000	0.000	0.005
Steele City	SD	Meade	378.781	378.884	0.104	SD601	Bullock-Parchin fine sandy loams, 0 to 4 percent slopes	0.000	0.000	0.090	0.000	0.001	0.104	0.000	0.000	0.031
Steele City	SD	Meade	378.884	379.037	0.153	SD601	Parchin-Bullock fine sandy loams, 2 to 6 percent slopes	0.000	0.000	0.137	0.000	0.000	0.153	0.000	0.000	0.092
Steele City	SD	Meade	379.037	379.291	0.254	SD601	Bullock-Parchin fine sandy loams, 0 to 4 percent slopes	0.000	0.000	0.221	0.000	0.003	0.254	0.000	0.000	0.076
Steele City	SD	Meade	379.291	379.518	0.227	SD601	Parchin-Bullock fine sandy loams, 2 to 6 percent slopes	0.000	0.000	0.204	0.000	0.000	0.227	0.000	0.000	0.136
Steele City	SD	Meade	379.518	379.702	0.185	SD601	Bullock-Parchin fine sandy loams, 0 to 4 percent slopes	0.000	0.000	0.161	0.000	0.002	0.185	0.000	0.000	0.055
Steele City	SD	Meade	379.702	379.821	0.119	SD601	Twilight-Marmarth-Parchin fine sandy loams, 4 to 9 percent slopes	0.000	0.030	0.042	0.000	0.000	0.119	0.000	0.000	0.024
Steele City	SD	Meade	379.821	379.858	0.038	SD601	Bullock-Parchin fine sandy loams, 0 to 4 percent slopes	0.000	0.000	0.033	0.000	0.000	0.038	0.000	0.000	0.011
Steele City	SD	Meade	379.858	379.896	0.038	SD601	Parchin-Bullock fine sandy loams, 2 to 6 percent slopes	0.000	0.000	0.034	0.000	0.000	0.038	0.000	0.000	0.023
Steele City	SD	Meade	379.896	379.961	0.065	SD601	Bullock-Parchin fine sandy loams, 0 to 4 percent slopes	0.000	0.000	0.057	0.000	0.001	0.065	0.000	0.000	0.020
Steele City	SD	Meade	379.961	380.038	0.076	SD601	Parchin-Bullock fine sandy loams, 2 to 6 percent slopes	0.000	0.000	0.069	0.000	0.000	0.076	0.000	0.000	0.046
Steele City	SD	Meade	380.038	380.235	0.197	SD601	Bullock-Parchin fine sandy loams, 0 to 4 percent slopes	0.000	0.000	0.172	0.000	0.002	0.197	0.000	0.000	0.059
Steele City	SD	Meade	380.235	380.248	0.013	SD601	Parchin-Bullock fine sandy loams, 2 to 6 percent slopes	0.000	0.000	0.011	0.000	0.000	0.013	0.000	0.000	0.008
Steele City	SD	Meade	380.248	380.281	0.033	SD601	Bullock-Parchin fine sandy loams, 0 to 4 percent slopes	0.000	0.000	0.029	0.000	0.000	0.033	0.000	0.000	0.010
Steele City	SD	Meade	380.281	380.345	0.064	SD601	Parchin-Bullock fine sandy loams, 2 to 6 percent slopes	0.000	0.000	0.058	0.000	0.000	0.064	0.000	0.000	0.039
Steele City	SD	Meade	380.345	380.485	0.140	SD601	Bullock-Slickspots complex, 0 to 4 percent slopes	0.000	0.000	0.129	0.000	0.001	0.140	0.000	0.000	0.004
Steele City	SD	Meade	380.485	380.634	0.148	SD601	Bullock-Parchin fine sandy loams, 0 to 4 percent slopes	0.000	0.000	0.129	0.000	0.001	0.148	0.000	0.000	0.045
Steele City	SD	Meade	380.634	381.122	0.489	SD601	Parchin-Bullock fine sandy loams, 2 to 6 percent	0.000	0.000	0.440	0.000	0.000	0.489	0.000	0.000	0.293

Appendix K – Soils by Milepost – Steele City Segment

Pipeline Segment	State	County	Beginning Milepost	Ending Milepost	Miles	Soil Series	Soil Series Name	Wind (miles)	Water (miles)	Low revegetation on Potential (miles)	Prime Farmland (miles)	Hydric Soils (miles)	Compaction on Prone (miles)	Stoney – Rocky (miles)	Shallow Bedrock (miles)	Droghty (miles)
							slopes									
Steele City	SD	Meade	381.122	381.903	0.781	SD601	Bullock-Parchin fine sandy loams, 0 to 4 percent slopes	0.000	0.000	0.679	0.000	0.008	0.781	0.000	0.000	0.234
Steele City	SD	Meade	381.903	381.985	0.082	SD601	Parchin-Bullock fine sandy loams, 2 to 6 percent slopes	0.000	0.000	0.074	0.000	0.000	0.082	0.000	0.000	0.049
Steele City	SD	Meade	381.985	382.540	0.554	SD601	Gerdrum loam, 0 to 4 percent slopes	0.000	0.000	0.505	0.000	0.000	0.554	0.000	0.000	0.000
Steele City	SD	Meade	382.540	382.745	0.205	SD601	Assinniboine-Twilight fine sandy loams, 6 to 9 percent slopes	0.000	0.127	0.031	0.205	0.000	0.205	0.000	0.000	0.000
Steele City	SD	Meade	382.745	382.889	0.144	SD601	Gerdrum loam, 0 to 4 percent slopes	0.000	0.000	0.131	0.000	0.000	0.144	0.000	0.000	0.000
Steele City	SD	Meade	382.889	383.012	0.123	SD601	Havre loam, channeled	0.000	0.000	0.123	0.000	0.001	0.123	0.000	0.000	0.000
Steele City	SD	Meade	383.012	383.289	0.277	SD601	Gerdrum loam, 0 to 4 percent slopes	0.000	0.000	0.252	0.000	0.000	0.277	0.000	0.000	0.000
Steele City	SD	Meade	383.289	383.570	0.281	SD601	Loburn-Gerdrum loams, 0 to 3 percent slopes	0.000	0.000	0.247	0.000	0.000	0.281	0.000	0.000	0.000
Steele City	SD	Meade	383.570	383.625	0.055	SD601	Assinniboine fine sandy loam, 2 to 6 percent slopes	0.000	0.000	0.004	0.055	0.001	0.055	0.000	0.000	0.000
Steele City	SD	Meade	383.625	383.755	0.130	SD601	Loburn-Gerdrum loams, 0 to 3 percent slopes	0.000	0.000	0.114	0.000	0.000	0.130	0.000	0.000	0.000
Steele City	SD	Meade	383.755	384.125	0.370	SD601	Bullock-Parchin fine sandy loams, 0 to 4 percent slopes	0.000	0.000	0.322	0.000	0.004	0.370	0.000	0.000	0.111
Steele City	SD	Meade	384.125	384.165	0.040	SD601	Parchin-Bullock fine sandy loams, 2 to 6 percent slopes	0.000	0.000	0.036	0.000	0.000	0.040	0.000	0.000	0.024
Steele City	SD	Meade	384.165	384.263	0.098	SD601	Bullock-Parchin fine sandy loams, 0 to 4 percent slopes	0.000	0.000	0.085	0.000	0.001	0.098	0.000	0.000	0.029
Steele City	SD	Meade	384.263	384.454	0.191	SD601	Loburn-Gerdrum loams, 0 to 3 percent slopes	0.000	0.000	0.168	0.000	0.000	0.191	0.000	0.000	0.000
Steele City	SD	Meade	384.454	384.797	0.343	SD601	Gerdrum loam, 0 to 4 percent slopes	0.000	0.000	0.312	0.000	0.000	0.343	0.000	0.000	0.000
Steele City	SD	Meade	384.797	384.910	0.113	SD601	Parchin-Bullock fine sandy loams, 2 to 6 percent slopes	0.000	0.000	0.101	0.000	0.000	0.113	0.000	0.000	0.068
Steele City	SD	Meade	384.910	384.964	0.054	SD601	Twilight-Marmarth-Parchin fine sandy loams, 4 to 9 percent slopes	0.000	0.013	0.019	0.000	0.000	0.054	0.000	0.000	0.011
Steele City	SD	Meade	384.964	385.050	0.086	SD601	Parchin-Bullock fine sandy loams, 2 to 6 percent slopes	0.000	0.000	0.078	0.000	0.000	0.086	0.000	0.000	0.052
Steele City	SD	Meade	385.050	385.091	0.041	SD601	Twilight-Marmarth-Parchin fine sandy loams, 4 to 9 percent slopes	0.000	0.010	0.014	0.000	0.000	0.041	0.000	0.000	0.008
Steele City	SD	Meade	385.091	385.294	0.202	SD601	Parchin-Bullock fine sandy loams, 2 to 6 percent slopes	0.000	0.000	0.182	0.000	0.000	0.202	0.000	0.000	0.121
Steele City	SD	Meade	385.294	385.371	0.078	SD601	Gerdrum loam, 0 to 4 percent slopes	0.000	0.000	0.071	0.000	0.000	0.078	0.000	0.000	0.000
Steele City	SD	Meade	385.371	385.689	0.317	SD601	Twilight-Marmarth-Parchin fine sandy loams, 4 to 9 percent slopes	0.000	0.079	0.111	0.000	0.000	0.317	0.000	0.000	0.063
Steele City	SD	Meade	385.689	385.798	0.109	SD601	Loburn-Gerdrum loams, 0 to 3 percent slopes	0.000	0.000	0.096	0.000	0.000	0.109	0.000	0.000	0.000
Steele City	SD	Meade	385.798	385.928	0.130	SD601	Assinniboine fine sandy loam, 2 to 6 percent slopes	0.000	0.000	0.010	0.130	0.001	0.130	0.000	0.000	0.000
Steele City	SD	Meade	385.928	386.093	0.165	SD601	Loburn-Gerdrum loams, 0 to 3 percent slopes	0.000	0.000	0.145	0.000	0.000	0.165	0.000	0.000	0.000
Steele City	SD	Meade	386.093	386.175	0.082	SD601	Assinniboine fine sandy loam, 2 to 6 percent slopes	0.000	0.000	0.007	0.082	0.001	0.082	0.000	0.000	0.000
Steele City	SD	Meade	386.175	386.351	0.176	SD601	Loburn-Gerdrum loams, 0 to 3 percent slopes	0.000	0.000	0.155	0.000	0.000	0.176	0.000	0.000	0.000
Steele City	SD	Meade	386.351	386.487	0.136	SD601	Assinniboine fine sandy loam, 2 to 6 percent slopes	0.000	0.000	0.011	0.136	0.001	0.136	0.000	0.000	0.000
Steele City	SD	Meade	386.487	386.574	0.087	SD601	Blackhall-Twilight fine sandy loams, 9 to 40 percent slopes	0.000	0.056	0.050	0.000	0.000	0.087	0.006	0.000	0.000
Steele City	SD	Meade	386.574	387.020	0.446	SD601	Twilight-Marmarth-Parchin fine sandy loams, 4 to 9 percent slopes	0.000	0.112	0.156	0.000	0.000	0.446	0.000	0.000	0.089

Appendix K – Soils by Milepost – Steele City Segment

Pipeline Segment	State	County	Beginning Milepost	Ending Milepost	Miles	Soil Series	Soil Series Name	Wind (miles)	Water (miles)	Low revegetation on Potential (miles)	Prime Farmland (miles)	Hydric Soils (miles)	Compaction on Prone (miles)	Stoney – Rocky (miles)	Shallow Bedrock (miles)	Droghty (miles)
Steele City	SD	Meade	387.020	387.125	0.105	SD601	Parchin-Bullock fine sandy loams, 2 to 6 percent slopes	0.000	0.000	0.094	0.000	0.000	0.105	0.000	0.000	0.063
Steele City	SD	Meade	387.125	387.277	0.152	SD601	Assinniboine fine sandy loam, 2 to 6 percent slopes	0.000	0.000	0.012	0.152	0.002	0.152	0.000	0.000	0.000
Steele City	SD	Meade	387.277	387.376	0.099	SD601	Grail silt loam	0.000	0.000	0.095	0.099	0.000	0.099	0.000	0.000	0.000
Steele City	SD	Meade	387.376	388.297	0.921	SD601	Assinniboine fine sandy loam, 2 to 6 percent slopes	0.000	0.000	0.074	0.921	0.009	0.921	0.000	0.000	0.000
Steele City	SD	Meade	388.297	388.465	0.168	SD601	Twilight-Marmarth-Parchin fine sandy loams, 4 to 9 percent slopes	0.000	0.042	0.059	0.000	0.000	0.168	0.000	0.000	0.034
Steele City	SD	Meade	388.465	389.252	0.788	SD601	Assinniboine fine sandy loam, 2 to 6 percent slopes	0.000	0.000	0.063	0.788	0.008	0.788	0.000	0.000	0.000
Steele City	SD	Meade	389.252	389.409	0.157	SD601	Assinniboine-Twilight fine sandy loams, 6 to 9 percent slopes	0.000	0.097	0.024	0.157	0.000	0.157	0.000	0.000	0.000
Steele City	SD	Meade	389.409	389.664	0.256	SD601	Assinniboine fine sandy loam, 2 to 6 percent slopes	0.000	0.000	0.020	0.256	0.003	0.256	0.000	0.000	0.000
Steele City	SD	Meade	389.664	389.871	0.206	SD601	Blackhall-Twilight fine sandy loams, 9 to 40 percent slopes	0.000	0.134	0.120	0.000	0.000	0.206	0.014	0.000	0.000
Steele City	SD	Meade	389.871	390.037	0.166	SD601	Assinniboine fine sandy loam, 2 to 6 percent slopes	0.000	0.000	0.013	0.166	0.002	0.166	0.000	0.000	0.000
Steele City	SD	Meade	390.037	390.071	0.035	SD601	Blackhall-Twilight fine sandy loams, 9 to 40 percent slopes	0.000	0.023	0.020	0.000	0.000	0.035	0.002	0.000	0.000
Steele City	SD	Meade	390.071	390.181	0.109	SD601	Assinniboine fine sandy loam, 2 to 6 percent slopes	0.000	0.000	0.009	0.109	0.001	0.109	0.000	0.000	0.000
Steele City	SD	Meade	390.181	390.223	0.043	SD601	Assinniboine-Twilight fine sandy loams, 6 to 9 percent slopes	0.000	0.026	0.006	0.043	0.000	0.043	0.000	0.000	0.000
Steele City	SD	Meade	390.223	390.259	0.035	SD601	Assinniboine fine sandy loam, 2 to 6 percent slopes	0.000	0.000	0.003	0.035	0.000	0.035	0.000	0.000	0.000
Steele City	SD	Meade	390.259	390.329	0.071	SD601	Assinniboine-Twilight fine sandy loams, 6 to 9 percent slopes	0.000	0.044	0.011	0.071	0.000	0.071	0.000	0.000	0.000
Steele City	SD	Meade	390.329	390.551	0.221	SD601	Assinniboine fine sandy loam, 2 to 6 percent slopes	0.000	0.000	0.018	0.221	0.002	0.221	0.000	0.000	0.000
Steele City	SD	Meade	390.551	390.911	0.360	SD601	Assinniboine-Twilight fine sandy loams, 6 to 9 percent slopes	0.000	0.223	0.054	0.360	0.000	0.360	0.000	0.000	0.000
Steele City	SD	Meade	390.911	391.423	0.512	SD601	Assinniboine fine sandy loam, 2 to 6 percent slopes	0.000	0.000	0.041	0.512	0.005	0.512	0.000	0.000	0.000
Steele City	SD	Meade	391.423	391.429	0.006	SD601	Assinniboine-Twilight fine sandy loams, 6 to 9 percent slopes	0.000	0.004	0.001	0.006	0.000	0.006	0.000	0.000	0.000
Steele City	SD	Meade	391.429	391.491	0.062	SD601	Assinniboine fine sandy loam, 2 to 6 percent slopes	0.000	0.000	0.005	0.062	0.001	0.062	0.000	0.000	0.000
Steele City	SD	Meade	391.491	391.641	0.149	SD601	Assinniboine-Twilight fine sandy loams, 6 to 9 percent slopes	0.000	0.093	0.022	0.149	0.000	0.149	0.000	0.000	0.000
Steele City	SD	Meade	391.641	391.839	0.199	SD601	Blackhall-Twilight fine sandy loams, 9 to 40 percent slopes	0.000	0.129	0.115	0.000	0.000	0.199	0.014	0.000	0.000
Steele City	SD	Meade	391.839	392.112	0.272	SD601	Assinniboine fine sandy loam, 2 to 6 percent slopes	0.000	0.000	0.022	0.272	0.003	0.272	0.000	0.000	0.000
Steele City	SD	Meade	392.112	392.203	0.092	SD601	Blackhall-Twilight fine sandy loams, 9 to 40 percent slopes	0.000	0.060	0.053	0.000	0.000	0.092	0.006	0.000	0.000
Steele City	SD	Meade	392.203	392.297	0.093	SD601	Cabbart loam, 9 to 40 percent slopes	0.000	0.093	0.000	0.000	0.000	0.093	0.000	0.000	0.000
Steele City	SD	Meade	392.297	392.335	0.038	SD601	Blackhall-Twilight fine sandy loams, 9 to 40 percent slopes	0.000	0.025	0.022	0.000	0.000	0.038	0.003	0.000	0.000
Steele City	SD	Meade	392.335	392.455	0.120	SD601	Assinniboine-Twilight fine sandy loams, 6 to 9 percent slopes	0.000	0.074	0.018	0.120	0.000	0.120	0.000	0.000	0.000
Steele City	SD	Meade	392.455	392.596	0.141	SD601	Blackhall-Twilight fine sandy loams, 9 to 40 percent slopes	0.000	0.092	0.082	0.000	0.000	0.141	0.010	0.000	0.000
Steele City	SD	Meade	392.596	392.757	0.161	SD601	Assinniboine fine sandy loam, 6 to 9 percent slopes	0.000	0.153	0.016	0.161	0.000	0.161	0.000	0.000	0.000
Steele City	SD	Meade	392.757	392.950	0.193	SD601	Blackhall-Twilight fine sandy loams, 9 to 40 percent	0.000	0.125	0.112	0.000	0.000	0.193	0.013	0.000	0.000

Appendix K – Soils by Milepost – Steele City Segment

Pipeline Segment	State	County	Beginning Milepost	Ending Milepost	Miles	Soil Series	Soil Series Name	Wind (miles)	Water (miles)	Low revegetation on Potential (miles)	Prime Farmland (miles)	Hydric Soils (miles)	Compaction on Prone (miles)	Stoney – Rocky (miles)	Shallow Bedrock (miles)	Droghty (miles)
							slopes									
Steele City	SD	Meade	392.950	393.237	0.287	SD601	Assinniboine fine sandy loam, 6 to 9 percent slopes	0.000	0.273	0.029	0.287	0.000	0.287	0.000	0.000	0.000
Steele City	SD	Meade	393.237	393.473	0.236	SD601	Delridge-Cabbart loams, 6 to 15 percent slopes	0.000	0.224	0.035	0.000	0.000	0.236	0.000	0.000	0.012
Steele City	SD	Meade	393.473	393.592	0.119	SD601	Assinniboine fine sandy loam, 6 to 9 percent slopes	0.000	0.113	0.012	0.119	0.000	0.119	0.000	0.000	0.000
Steele City	SD	Meade	393.592	393.752	0.160	SD601	Cabbart loam, 9 to 40 percent slopes	0.000	0.160	0.000	0.000	0.000	0.160	0.000	0.000	0.000
Steele City	SD	Meade	393.752	393.889	0.137	SD601	Tanna-Delridge complex, 2 to 6 percent slopes	0.000	0.007	0.096	0.137	0.000	0.137	0.000	0.000	0.000
Steele City	SD	Meade	393.889	394.132	0.244	SD601	Cabbart loam, 9 to 40 percent slopes	0.000	0.244	0.000	0.000	0.000	0.244	0.000	0.000	0.000
Steele City	SD	Meade	394.132	394.220	0.088	SD601	Delridge-Cabbart loams, 6 to 15 percent slopes	0.000	0.083	0.013	0.000	0.000	0.088	0.000	0.000	0.004
Steele City	SD	Meade	394.220	394.236	0.016	SD601	Cabbart loam, 9 to 40 percent slopes	0.000	0.016	0.000	0.000	0.000	0.016	0.000	0.000	0.000
Steele City	SD	Meade	394.236	394.331	0.095	SD601	Delridge-Cabbart loams, 6 to 15 percent slopes	0.000	0.090	0.014	0.000	0.000	0.095	0.000	0.000	0.005
Steele City	SD	Meade	394.331	394.368	0.037	SD601	Cabbart loam, 9 to 40 percent slopes	0.000	0.037	0.000	0.000	0.000	0.037	0.000	0.000	0.000
Steele City	SD	Meade	394.368	394.506	0.138	SD601	Assinniboine fine sandy loam, 2 to 6 percent slopes	0.000	0.000	0.011	0.138	0.001	0.138	0.000	0.000	0.000
Steele City	SD	Meade	394.506	394.567	0.061	SD601	Cabbart loam, 9 to 40 percent slopes	0.000	0.061	0.000	0.000	0.000	0.061	0.000	0.000	0.000
Steele City	SD	Meade	394.567	394.691	0.124	SD601	Assinniboine-Twilight fine sandy loams, 6 to 9 percent slopes	0.000	0.077	0.019	0.124	0.000	0.124	0.000	0.000	0.000
Steele City	SD	Meade	394.691	395.184	0.493	SD601	Cabbart loam, 9 to 40 percent slopes	0.000	0.493	0.000	0.000	0.000	0.493	0.000	0.000	0.000
Steele City	SD	Meade	395.184	395.350	0.166	SD601	Blackhall-Twilight fine sandy loams, 9 to 40 percent slopes	0.000	0.108	0.096	0.000	0.000	0.166	0.012	0.000	0.000
Steele City	SD	Meade	395.350	395.438	0.089	SD601	Blackhall-Rock outcrop complex, 15 to 40 percent slopes	0.000	0.076	0.053	0.000	0.000	0.089	0.000	0.000	0.000
Steele City	SD	Meade	395.438	395.576	0.138	SD601	Blackhall-Twilight fine sandy loams, 9 to 40 percent slopes	0.000	0.089	0.080	0.000	0.000	0.138	0.010	0.000	0.000
Steele City	SD	Meade	395.576	395.778	0.202	SD601	Delridge-Cabbart loams, 6 to 15 percent slopes	0.000	0.192	0.030	0.000	0.000	0.202	0.000	0.000	0.010
Steele City	SD	Meade	395.778	395.932	0.154	SD601	Eapa loam, 6 to 9 percent slopes	0.000	0.154	0.148	0.154	0.000	0.154	0.000	0.000	0.000
Steele City	SD	Meade	395.932	396.398	0.465	SD601	Cabbart loam, 9 to 40 percent slopes	0.000	0.465	0.000	0.000	0.000	0.465	0.000	0.000	0.000
Steele City	SD	Meade	396.398	396.455	0.058	SD601	Eapa-Delridge loams, 6 to 9 percent slopes	0.000	0.058	0.043	0.000	0.000	0.058	0.000	0.000	0.000
Steele City	SD	Meade	396.455	397.056	0.601	SD601	Cabbart loam, 9 to 40 percent slopes	0.000	0.601	0.000	0.000	0.000	0.601	0.000	0.000	0.000
Steele City	SD	Meade	397.056	397.078	0.022	SD601	Gerdrum loam, 0 to 4 percent slopes	0.000	0.000	0.020	0.000	0.000	0.022	0.000	0.000	0.000
Steele City	SD	Meade	397.078	397.107	0.029	SD601	Cabbart loam, 9 to 40 percent slopes	0.000	0.029	0.000	0.000	0.000	0.029	0.000	0.000	0.000
Steele City	SD	Meade	397.107	397.463	0.357	SD601	Gerdrum loam, 0 to 4 percent slopes	0.000	0.000	0.324	0.000	0.000	0.357	0.000	0.000	0.000
Steele City	SD	Meade	397.463	397.595	0.132	SD601	Cabbart loam, 9 to 40 percent slopes	0.000	0.132	0.000	0.000	0.000	0.132	0.000	0.000	0.000
Steele City	SD	Meade	397.595	397.921	0.327	SD601	Gerdrum loam, 0 to 4 percent slopes	0.000	0.000	0.297	0.000	0.000	0.327	0.000	0.000	0.000
Steele City	SD	Meade	397.921	397.946	0.025	SD601	Lohmiller silty clay loam	0.001	0.000	0.023	0.025	0.000	0.025	0.000	0.000	0.001
Steele City	SD	Meade	397.946	397.976	0.029	SD601	Gerdrum loam, 0 to 4 percent slopes	0.000	0.000	0.027	0.000	0.000	0.029	0.000	0.000	0.000
Steele City	SD	Meade	397.976	398.221	0.246	SD601	Lohmiller silty clay loam	0.007	0.000	0.231	0.246	0.002	0.246	0.000	0.000	0.007
Steele City	SD	Meade	398.221	398.601	0.380	SD601	Abor silty clay, 2 to 6 percent slopes	0.000	0.019	0.361	0.380	0.000	0.380	0.000	0.000	0.000
Steele City	SD	Meade	398.601	398.760	0.159	SD601	Lohmiller silty clay loam	0.005	0.000	0.150	0.159	0.002	0.159	0.000	0.000	0.005
Steele City	SD	Meade	398.760	399.117	0.357	SD601	Havre loam	0.000	0.000	0.357	0.357	0.004	0.357	0.000	0.000	0.000
Steele City	SD	Meade	399.117	399.274	0.157	SD601	Havre loam, channeled	0.000	0.000	0.157	0.000	0.002	0.157	0.000	0.000	0.000
Steele City	SD	Meade	399.274	399.742	0.468	SD601	Lawther silty clay, 2 to 6 percent slopes	0.000	0.033	0.435	0.468	0.000	0.468	0.000	0.000	0.000
Steele City	SD	Meade	399.742	399.801	0.060	SD601	Bullock-Parchin fine sandy loams, 0 to 4 percent slopes	0.000	0.000	0.052	0.000	0.001	0.060	0.000	0.000	0.018
Steele City	SD	Meade	399.801	399.843	0.042	SD601	Delridge-Cabbart loams, 6 to 15 percent slopes	0.000	0.040	0.006	0.000	0.000	0.042	0.000	0.000	0.002
Steele City	SD	Meade	399.843	399.870	0.027	SD601	Bullock-Parchin fine sandy loams, 0 to 4 percent slopes	0.000	0.000	0.023	0.000	0.000	0.027	0.000	0.000	0.008

Appendix K – Soils by Milepost – Steele City Segment

Pipeline Segment	State	County	Beginning Milepost	Ending Milepost	Miles	Soil Series	Soil Series Name	Wind (miles)	Water (miles)	Low revegetation on Potential (miles)	Prime Farmland (miles)	Hydric Soils (miles)	Compaction on Prone (miles)	Stoney – Rocky (miles)	Shallow Bedrock (miles)	Droghty (miles)
Steele City	SD	Meade	399.870	400.097	0.227	SD601	Cabbart loam, 9 to 40 percent slopes	0.000	0.227	0.000	0.000	0.000	0.227	0.000	0.000	0.000
Steele City	SD	Meade	400.097	400.285	0.188	SD601	Delridge-Cabbart loams, 6 to 15 percent slopes	0.000	0.178	0.028	0.000	0.000	0.188	0.000	0.000	0.009
Steele City	SD	Meade	400.285	400.346	0.062	SD601	Cabbart loam, 9 to 40 percent slopes	0.000	0.062	0.000	0.000	0.000	0.062	0.000	0.000	0.000
Steele City	SD	Meade	400.346	400.356	0.010	SD601	Delridge-Cabbart loams, 6 to 15 percent slopes	0.000	0.009	0.001	0.000	0.000	0.010	0.000	0.000	0.000
Steele City	SD	Meade	400.356	400.838	0.482	SD601	Cabbart loam, 9 to 40 percent slopes	0.000	0.482	0.000	0.000	0.000	0.482	0.000	0.000	0.000
Steele City	SD	Meade	400.838	401.575	0.737	SD601	Delridge-Cabbart loams, 6 to 15 percent slopes	0.000	0.700	0.111	0.000	0.000	0.737	0.000	0.000	0.037
Steele City	SD	Meade	401.575	401.583	0.008	SD601	Eapa loam, 2 to 6 percent slopes	0.000	0.000	0.007	0.008	0.000	0.008	0.000	0.000	0.000
Steele City	SD	Meade	401.583	403.040	1.458	SD601	Delridge-Cabbart loams, 6 to 15 percent slopes	0.000	1.385	0.219	0.000	0.000	1.458	0.000	0.000	0.073
Steele City	SD	Meade	403.040	403.299	0.259	SD601	Eapa-Grail complex, 2 to 6 percent slopes	0.000	0.000	0.233	0.259	0.000	0.259	0.000	0.000	0.000
Steele City	SD	Meade	403.299	403.327	0.028	SD601	Eapa-Grail complex, 6 to 9 percent slopes	0.000	0.028	0.025	0.028	0.000	0.028	0.000	0.000	0.000
Steele City	SD	Meade	403.327	403.390	0.063	SD601	Delridge-Cabbart loams, 6 to 15 percent slopes	0.000	0.060	0.009	0.000	0.000	0.063	0.000	0.000	0.003
Steele City	SD	Meade	403.390	403.682	0.291	SD601	Eapa-Grail complex, 6 to 9 percent slopes	0.000	0.291	0.262	0.291	0.000	0.291	0.000	0.000	0.000
Steele City	SD	Meade	403.682	404.426	0.744	SD601	Eapa-Grail complex, 2 to 6 percent slopes	0.000	0.000	0.670	0.744	0.000	0.744	0.000	0.000	0.000
Steele City	SD	Meade	404.426	404.540	0.114	SD601	Eapa-Grail complex, 6 to 9 percent slopes	0.000	0.114	0.102	0.114	0.000	0.114	0.000	0.000	0.000
Steele City	SD	Meade	404.540	404.576	0.036	SD601	Eapa-Grail complex, 2 to 6 percent slopes	0.000	0.000	0.032	0.036	0.000	0.036	0.000	0.000	0.000
Steele City	SD	Meade	404.576	404.675	0.100	SD601	Eapa-Grail complex, 6 to 9 percent slopes	0.000	0.100	0.090	0.100	0.000	0.100	0.000	0.000	0.000
Steele City	SD	Meade	404.675	404.740	0.064	SD601	Eapa-Grail complex, 2 to 6 percent slopes	0.000	0.000	0.058	0.064	0.000	0.064	0.000	0.000	0.000
Steele City	SD	Meade	404.740	404.958	0.218	SD601	Eapa-Grail complex, 6 to 9 percent slopes	0.000	0.218	0.196	0.218	0.000	0.218	0.000	0.000	0.000
Steele City	SD	Meade	404.958	405.696	0.738	SD601	Delridge-Cabbart loams, 6 to 15 percent slopes	0.000	0.701	0.111	0.000	0.000	0.738	0.000	0.000	0.037
Steele City	SD	Meade	405.696	405.704	0.008	SD601	Cabbart loam, 9 to 40 percent slopes	0.000	0.008	0.000	0.000	0.000	0.008	0.000	0.000	0.000
Steele City	SD	Meade	405.704	405.731	0.027	SD601	Delridge-Cabbart loams, 6 to 15 percent slopes	0.000	0.025	0.004	0.000	0.000	0.027	0.000	0.000	0.001
Steele City	SD	Meade	405.731	405.793	0.062	SD601	Cabbart loam, 9 to 40 percent slopes	0.000	0.062	0.000	0.000	0.000	0.062	0.000	0.000	0.000
Steele City	SD	Meade	405.793	405.828	0.036	SD601	Delridge-Cabbart loams, 6 to 15 percent slopes	0.000	0.034	0.005	0.000	0.000	0.036	0.000	0.000	0.002
Steele City	SD	Meade	405.828	406.061	0.233	SD601	Eapa-Grail complex, 2 to 6 percent slopes	0.000	0.000	0.210	0.233	0.000	0.233	0.000	0.000	0.000
Steele City	SD	Meade	406.061	406.609	0.548	SD601	Delridge-Cabbart loams, 6 to 15 percent slopes	0.000	0.520	0.082	0.000	0.000	0.548	0.000	0.000	0.027
Steele City	SD	Meade	406.609	406.737	0.128	SD601	Eapa loam, 2 to 6 percent slopes	0.000	0.000	0.122	0.128	0.001	0.128	0.000	0.000	0.000
Steele City	SD	Meade	406.737	407.489	0.752	SD601	Eapa loam, 0 to 2 percent slopes	0.000	0.000	0.752	0.752	0.008	0.752	0.000	0.000	0.000
Steele City	SD	Meade	407.489	407.539	0.049	SD601	Nihill-Attewan complex, 4 to 20 percent slopes	0.000	0.032	0.028	0.000	0.000	0.049	0.042	0.000	0.015
Steele City	SD	Meade	407.539	407.603	0.065	SD601	Gerdrum loam, 0 to 4 percent slopes	0.000	0.000	0.059	0.000	0.000	0.065	0.000	0.000	0.000
Steele City	SD	Meade	407.603	407.655	0.052	SD601	Havre loam, channeled	0.000	0.000	0.052	0.000	0.001	0.052	0.000	0.000	0.000
Steele City	SD	Meade	407.655	407.963	0.307	SD601	Havre loam	0.000	0.000	0.307	0.307	0.003	0.307	0.000	0.000	0.000
Steele City	SD	Meade	407.963	408.160	0.197	SD601	Eapa-Grail complex, 2 to 6 percent slopes	0.000	0.000	0.177	0.197	0.000	0.197	0.000	0.000	0.000
Steele City	SD	Meade	408.160	408.220	0.060	SD601	Bullock-Parchin fine sandy loams, 0 to 4 percent slopes	0.000	0.000	0.052	0.000	0.001	0.060	0.000	0.000	0.018
Steele City	SD	Meade	408.220	408.261	0.042	SD601	Delridge-Cabbart loams, 6 to 15 percent slopes	0.000	0.039	0.006	0.000	0.000	0.042	0.000	0.000	0.002
Steele City	SD	Meade	408.261	408.447	0.186	SD601	Tanna-Savo complex, 2 to 6 percent slopes	0.000	0.013	0.113	0.186	0.000	0.186	0.000	0.000	0.000
Steele City	SD	Meade	408.447	408.742	0.295	SD601	Eapa-Grail complex, 2 to 6 percent slopes	0.000	0.000	0.265	0.295	0.000	0.295	0.000	0.000	0.000
Steele City	SD	Meade	408.742	408.841	0.099	SD601	Delridge-Cabbart loams, 6 to 15 percent slopes	0.000	0.094	0.015	0.000	0.000	0.099	0.000	0.000	0.005
Steele City	SD	Meade	408.841	409.189	0.348	SD601	Eapa-Grail complex, 2 to 6 percent slopes	0.000	0.000	0.313	0.348	0.000	0.348	0.000	0.000	0.000
Steele City	SD	Meade	409.189	409.361	0.172	SD601	Cabbart loam, 9 to 40 percent slopes	0.000	0.172	0.000	0.000	0.000	0.172	0.000	0.000	0.000
Steele City	SD	Meade	409.361	409.686	0.326	SD601	Gerdrum loam, 0 to 4 percent slopes	0.000	0.000	0.296	0.000	0.000	0.326	0.000	0.000	0.000
Steele City	SD	Meade	409.686	409.899	0.213	SD601	Delridge-Cabbart loams, 6 to 15 percent slopes	0.000	0.202	0.032	0.000	0.000	0.213	0.000	0.000	0.011
Steele City	SD	Meade	409.899	409.945	0.046	SD601	Eapa loam, 2 to 6 percent slopes	0.000	0.000	0.044	0.046	0.000	0.046	0.000	0.000	0.000
Steele City	SD	Meade	409.945	410.141	0.196	SD601	Tanna-Savo complex, 2 to 6 percent slopes	0.000	0.014	0.119	0.196	0.000	0.196	0.000	0.000	0.000
Steele City	SD	Meade	410.141	410.354	0.213	SD601	Eapa-Grail complex, 2 to 6 percent slopes	0.000	0.000	0.192	0.213	0.000	0.213	0.000	0.000	0.000

Appendix K – Soils by Milepost – Steele City Segment

Pipeline Segment	State	County	Beginning Milepost	Ending Milepost	Miles	Soil Series	Soil Series Name	Wind (miles)	Water (miles)	Low revegetation on Potential (miles)	Prime Farmland (miles)	Hydric Soils (miles)	Compaction on Prone (miles)	Stoney – Rocky (miles)	Shallow Bedrock (miles)	Droghty (miles)
Steele City	SD	Meade	410.354	410.400	0.047	SD601	Delridge-Cabbart loams, 6 to 15 percent slopes	0.000	0.044	0.007	0.000	0.000	0.047	0.000	0.000	0.002
Steele City	SD	Meade	410.400	410.577	0.176	SD601	Tanna-Savo complex, 2 to 6 percent slopes	0.000	0.012	0.107	0.176	0.000	0.176	0.000	0.000	0.000
Steele City	SD	Meade	410.577	410.828	0.252	SD601	Delridge-Cabbart loams, 6 to 15 percent slopes	0.000	0.239	0.038	0.000	0.000	0.252	0.000	0.000	0.013
Steele City	SD	Meade	410.828	410.942	0.113	SD601	Abor silty clay, 6 to 9 percent slopes	0.000	0.113	0.102	0.113	0.000	0.113	0.000	0.000	0.000
Steele City	SD	Meade	410.942	411.034	0.092	SD601	Lawther silty clay, 2 to 6 percent slopes	0.000	0.006	0.086	0.092	0.000	0.092	0.000	0.000	0.000
Steele City	SD	Meade	411.034	411.237	0.203	SD601	Delridge-Cabbart loams, 6 to 15 percent slopes	0.000	0.193	0.030	0.000	0.000	0.203	0.000	0.000	0.010
Steele City	SD	Meade	411.237	411.295	0.058	SD601	Abor silty clay, 2 to 6 percent slopes	0.000	0.003	0.055	0.058	0.000	0.058	0.000	0.000	0.000
Steele City	SD	Meade	411.295	411.413	0.118	SD601	Lawther silty clay, 2 to 6 percent slopes	0.000	0.008	0.110	0.118	0.000	0.118	0.000	0.000	0.000
Steele City	SD	Meade	411.413	411.419	0.006	SD601	Abor silty clay, 2 to 6 percent slopes	0.000	0.000	0.006	0.006	0.000	0.006	0.000	0.000	0.000
Steele City	SD	Meade	411.419	411.485	0.066	SD601	Lawther silty clay, 2 to 6 percent slopes	0.000	0.005	0.061	0.066	0.000	0.066	0.000	0.000	0.000
Steele City	SD	Meade	411.485	411.562	0.078	SD601	Abor silty clay, 2 to 6 percent slopes	0.000	0.004	0.074	0.078	0.000	0.078	0.000	0.000	0.000
Steele City	SD	Meade	411.562	411.590	0.028	SD601	Lawther silty clay, 2 to 6 percent slopes	0.000	0.002	0.026	0.028	0.000	0.028	0.000	0.000	0.000
Steele City	SD	Meade	411.590	411.804	0.214	SD601	Abor silty clay, 2 to 6 percent slopes	0.000	0.011	0.203	0.214	0.000	0.214	0.000	0.000	0.000
Steele City	SD	Meade	411.804	411.847	0.042	SD601	Lawther silty clay, 2 to 6 percent slopes	0.000	0.003	0.039	0.042	0.000	0.042	0.000	0.000	0.000
Steele City	SD	Meade	411.847	411.888	0.042	SD601	Abor silty clay, 2 to 6 percent slopes	0.000	0.002	0.039	0.042	0.000	0.042	0.000	0.000	0.000
Steele City	SD	Meade	411.888	412.015	0.126	SD601	Lawther silty clay, 2 to 6 percent slopes	0.000	0.009	0.118	0.126	0.000	0.126	0.000	0.000	0.000
Steele City	SD	Meade	412.015	412.048	0.033	SD601	Abor silty clay, 2 to 6 percent slopes	0.000	0.002	0.032	0.033	0.000	0.033	0.000	0.000	0.000
Steele City	SD	Meade	412.048	412.820	0.772	SD601	Abor silty clay, 6 to 9 percent slopes	0.000	0.772	0.694	0.772	0.000	0.772	0.000	0.000	0.000
Steele City	SD	Meade	412.820	412.931	0.112	SD601	Delridge-Cabbart loams, 6 to 15 percent slopes	0.000	0.106	0.017	0.000	0.000	0.112	0.000	0.000	0.006
Steele City	SD	Meade	412.931	413.130	0.199	SD601	Abor silty clay, 6 to 9 percent slopes	0.000	0.199	0.179	0.199	0.000	0.199	0.000	0.000	0.000
Steele City	SD	Meade	413.130	413.164	0.034	SD601	Delridge-Cabbart loams, 6 to 15 percent slopes	0.000	0.032	0.005	0.000	0.000	0.034	0.000	0.000	0.002
Steele City	SD	Meade	413.164	413.405	0.241	SD601	Abor silty clay, 6 to 9 percent slopes	0.000	0.241	0.217	0.241	0.000	0.241	0.000	0.000	0.000
Steele City	SD	Meade	413.405	413.508	0.103	SD601	Abor silty clay, 2 to 6 percent slopes	0.000	0.005	0.098	0.103	0.000	0.103	0.000	0.000	0.000
Steele City	SD	Meade	413.508	414.427	0.919	SD601	Abor silty clay, 6 to 9 percent slopes	0.000	0.919	0.827	0.919	0.000	0.919	0.000	0.000	0.000
Steele City	SD	Meade	414.427	414.555	0.128	SD601	Delridge-Cabbart loams, 6 to 15 percent slopes	0.000	0.122	0.019	0.000	0.000	0.128	0.000	0.000	0.006
Steele City	SD	Meade	414.555	414.688	0.133	SD601	Lawther silty clay, 2 to 6 percent slopes	0.000	0.009	0.124	0.133	0.000	0.133	0.000	0.000	0.000
Steele City	SD	Meade	414.688	414.845	0.157	SD601	Delridge-Cabbart loams, 6 to 15 percent slopes	0.000	0.149	0.024	0.000	0.000	0.157	0.000	0.000	0.008
Steele City	SD	Meade	414.845	414.879	0.033	SD601	Abor silty clay, 6 to 9 percent slopes	0.000	0.033	0.030	0.033	0.000	0.033	0.000	0.000	0.000
Steele City	SD	Meade	414.879	415.069	0.191	SD601	Gerdrum loam, 0 to 4 percent slopes	0.000	0.000	0.173	0.000	0.000	0.191	0.000	0.000	0.000
Steele City	SD	Meade	415.069	415.154	0.085	SD601	Tanna-Delridge complex, 2 to 6 percent slopes	0.000	0.004	0.059	0.085	0.000	0.085	0.000	0.000	0.000
Steele City	SD	Meade	415.154	415.190	0.036	SD601	Gerdrum loam, 0 to 4 percent slopes	0.000	0.000	0.033	0.000	0.000	0.036	0.000	0.000	0.000
Steele City	SD	Meade	415.190	415.203	0.013	SD601	Tanna-Savo complex, 6 to 9 percent slopes	0.000	0.013	0.008	0.000	0.000	0.013	0.000	0.000	0.000
Steele City	SD	Meade	415.203	415.253	0.050	SD601	Gerdrum loam, 0 to 4 percent slopes	0.000	0.000	0.046	0.000	0.000	0.050	0.000	0.000	0.000
Steele City	SD	Meade	415.253	415.553	0.300	SD601	Tanna-Savo complex, 6 to 9 percent slopes	0.000	0.300	0.183	0.000	0.000	0.300	0.000	0.000	0.000
Steele City	SD	Meade	415.553	415.629	0.076	SD601	Delridge-Cabbart loams, 6 to 15 percent slopes	0.000	0.073	0.011	0.000	0.000	0.076	0.000	0.000	0.004
Steele City	SD	Meade	415.629	415.779	0.149	SD601	Tanna-Delridge complex, 2 to 6 percent slopes	0.000	0.007	0.105	0.149	0.000	0.149	0.000	0.000	0.000
Steele City	SD	Meade	415.779	415.839	0.060	SD601	Delridge-Cabbart loams, 6 to 15 percent slopes	0.000	0.057	0.009	0.000	0.000	0.060	0.000	0.000	0.003
Steele City	SD	Meade	415.839	416.156	0.318	SD601	Abor silty clay, 2 to 6 percent slopes	0.000	0.016	0.302	0.318	0.000	0.318	0.000	0.000	0.000
Steele City	SD	Meade	416.156	416.199	0.042	SD601	Samsil clay, 6 to 25 percent slopes	0.000	0.039	0.039	0.000	0.000	0.042	0.001	0.000	0.000
Steele City	SD	Meade	416.199	416.390	0.192	SD601	Abor silty clay, 2 to 6 percent slopes	0.000	0.010	0.182	0.192	0.000	0.192	0.000	0.000	0.000
Steele City	SD	Meade	416.390	416.475	0.084	SD601	Pierre clay, 2 to 6 percent slopes	0.000	0.005	0.008	0.000	0.000	0.084	0.000	0.000	0.000
Steele City	SD	Meade	416.475	416.516	0.042	SD601	Abor silty clay, 2 to 6 percent slopes	0.000	0.002	0.040	0.042	0.000	0.042	0.000	0.000	0.000
Steele City	SD	Meade	416.516	416.544	0.028	SD601	Nunn clay loam, 2 to 6 percent slopes	0.000	0.000	0.002	0.028	0.000	0.028	0.023	0.000	0.000
Steele City	SD	Meade	416.544	416.662	0.118	SD601	Tanna-Delridge complex, 2 to 6 percent slopes	0.000	0.006	0.082	0.118	0.000	0.118	0.000	0.000	0.000

Appendix K – Soils by Milepost – Steele City Segment

Pipeline Segment	State	County	Beginning Milepost	Ending Milepost	Miles	Soil Series	Soil Series Name	Wind (miles)	Water (miles)	Low revegetation on Potential (miles)	Prime Farmland (miles)	Hydric Soils (miles)	Compaction on Prone (miles)	Stoney – Rocky (miles)	Shallow Bedrock (miles)	Droghty (miles)
Steele City	SD	Meade	416.662	416.834	0.172	SD601	Nunn clay loam, 2 to 6 percent slopes	0.000	0.000	0.014	0.172	0.002	0.172	0.146	0.000	0.000
Steele City	SD	Meade	416.834	417.074	0.240	SD601	Samsil clay, 6 to 25 percent slopes	0.000	0.221	0.223	0.000	0.000	0.240	0.007	0.000	0.000
Steele City	SD	Meade	417.074	417.154	0.080	SD601	Tanna-Delridge complex, 2 to 6 percent slopes	0.000	0.004	0.056	0.080	0.000	0.080	0.000	0.000	0.000
Steele City	SD	Meade	417.154	417.336	0.182	SD601	Nunn clay loam, 2 to 6 percent slopes	0.000	0.000	0.015	0.182	0.002	0.182	0.155	0.000	0.000
Steele City	SD	Meade	417.336	417.501	0.165	SD601	Pierre-Samsil clays, 6 to 15 percent slopes	0.000	0.140	0.066	0.000	0.000	0.165	0.008	0.000	0.000
Steele City	SD	Meade	417.501	417.547	0.045	SD601	Nunn clay loam, 2 to 6 percent slopes	0.000	0.000	0.004	0.045	0.000	0.045	0.038	0.000	0.000
Steele City	SD	Meade	417.547	417.711	0.164	SD601	Pierre-Samsil clays, 6 to 15 percent slopes	0.000	0.139	0.066	0.000	0.000	0.164	0.008	0.000	0.000
Steele City	SD	Meade	417.711	417.809	0.098	SD601	Nunn clay loam, 2 to 6 percent slopes	0.000	0.000	0.008	0.098	0.001	0.098	0.083	0.000	0.000
Steele City	SD	Meade	417.809	417.989	0.181	SD601	Tanna-Savo complex, 2 to 6 percent slopes	0.000	0.013	0.110	0.181	0.000	0.181	0.000	0.000	0.000
Steele City	SD	Meade	417.989	418.732	0.743	SD601	Samsil clay, 6 to 25 percent slopes	0.000	0.683	0.691	0.000	0.000	0.743	0.022	0.000	0.000
Steele City	SD	Meade	418.732	418.801	0.069	SD601	Stetter clay	0.000	0.000	0.069	0.069	0.001	0.069	0.000	0.000	0.000
Steele City	SD	Meade	418.801	419.150	0.349	SD601	Samsil clay, 6 to 25 percent slopes	0.000	0.321	0.324	0.000	0.000	0.349	0.010	0.000	0.000
Steele City	SD	Meade	419.150	419.256	0.107	SD601	Samsil-Rock outcrop complex, 15 to 40 percent slopes	0.000	0.099	0.061	0.000	0.000	0.107	0.043	0.000	0.000
Steele City	SD	Meade	419.256	419.588	0.331	SD601	Stetter clay	0.000	0.000	0.331	0.331	0.003	0.331	0.000	0.000	0.000
Steele City	SD	Meade	419.588	419.907	0.320	SD601	Samsil clay, 6 to 25 percent slopes	0.000	0.294	0.297	0.000	0.000	0.320	0.010	0.000	0.000
Steele City	SD	Meade	419.907	420.000	0.093	SD601	Stetter clay	0.000	0.000	0.093	0.093	0.001	0.093	0.000	0.000	0.000
Steele City	SD	Meade	420.000	420.177	0.177	SD601	Samsil-Rock outcrop complex, 15 to 40 percent slopes	0.000	0.165	0.101	0.000	0.000	0.177	0.071	0.000	0.000
Steele City	SD	Meade	420.177	420.490	0.313	SD601	Samsil clay, 6 to 25 percent slopes	0.000	0.288	0.291	0.000	0.000	0.313	0.009	0.000	0.000
Steele City	SD	Meade	420.490	420.554	0.064	SD601	Pierre-Samsil clays, 6 to 15 percent slopes	0.000	0.055	0.026	0.000	0.000	0.064	0.003	0.000	0.000
Steele City	SD	Meade	420.554	420.593	0.040	SD601	Samsil clay, 6 to 25 percent slopes	0.000	0.036	0.037	0.000	0.000	0.040	0.001	0.000	0.000
Steele City	SD	Meade	420.593	420.671	0.078	SD601	Pierre-Samsil clays, 6 to 15 percent slopes	0.000	0.066	0.031	0.000	0.000	0.078	0.004	0.000	0.000
Steele City	SD	Meade	420.671	421.364	0.693	SD601	Samsil clay, 6 to 25 percent slopes	0.000	0.637	0.644	0.000	0.000	0.693	0.021	0.000	0.000
Steele City	SD	Meade	421.364	421.447	0.083	SD601	Lohmiller silty clay loam, channeled	0.000	0.000	0.083	0.000	0.001	0.083	0.000	0.000	0.000
Steele City	SD	Meade	421.447	421.540	0.093	SD601	Samsil clay, 6 to 25 percent slopes	0.000	0.085	0.086	0.000	0.000	0.093	0.003	0.000	0.000
Steele City	SD	Meade	421.540	421.791	0.251	SD601	Lohmiller silty clay loam, channeled	0.000	0.000	0.251	0.000	0.003	0.251	0.000	0.000	0.000
Steele City	SD	Meade	421.791	421.954	0.163	SD601	Lohmiller silty clay loam	0.005	0.000	0.153	0.163	0.002	0.163	0.000	0.000	0.005
Steele City	SD	Meade	421.954	422.346	0.392	SD601	Samsil clay, 6 to 25 percent slopes	0.000	0.360	0.364	0.000	0.000	0.392	0.012	0.000	0.000
Steele City	SD	Meade	422.346	422.437	0.092	SD601	Lohmiller silty clay loam, channeled	0.000	0.000	0.092	0.000	0.001	0.092	0.000	0.000	0.000
Steele City	SD	Meade	422.437	422.666	0.228	SD601	Lohmiller silty clay loam	0.007	0.000	0.215	0.228	0.002	0.228	0.000	0.000	0.007
Steele City	SD	Meade	422.666	422.925	0.259	SD601	Lohmiller silty clay loam, channeled	0.000	0.000	0.259	0.000	0.003	0.259	0.000	0.000	0.000
Steele City	SD	Meade	422.925	422.952	0.028	SD601	Samsil-Rock outcrop complex, 15 to 40 percent slopes	0.000	0.026	0.016	0.000	0.000	0.028	0.011	0.000	0.000
Steele City	SD	Meade	422.952	423.011	0.059	SD601	Samsil clay, 6 to 25 percent slopes	0.000	0.054	0.055	0.000	0.000	0.059	0.002	0.000	0.000
Steele City	SD	Meade	423.011	423.276	0.264	SD601	Lohmiller silty clay loam, channeled	0.000	0.000	0.264	0.000	0.003	0.264	0.000	0.000	0.000
Steele City	SD	Meade	423.276	423.335	0.059	SD601	Pierre-Samsil clays, 6 to 15 percent slopes	0.000	0.050	0.024	0.000	0.000	0.059	0.003	0.000	0.000
Steele City	SD	Meade	423.335	423.547	0.211	SD601	Kyle clay, 0 to 2 percent slopes	0.000	0.000	0.211	0.000	0.002	0.211	0.000	0.000	0.000
Steele City	SD	Meade	423.547	423.823	0.277	SD601	Kyle clay, 2 to 6 percent slopes	0.000	0.014	0.277	0.000	0.003	0.277	0.000	0.000	0.000
Steele City	SD	Meade	423.823	424.100	0.277	SD601	Pierre-Samsil clays, 6 to 15 percent slopes	0.000	0.235	0.111	0.000	0.000	0.277	0.014	0.000	0.000
Steele City	SD	Meade	424.100	424.164	0.064	SD601	Pierre clay, 2 to 6 percent slopes	0.000	0.004	0.006	0.000	0.000	0.064	0.000	0.000	0.000
Steele City	SD	Meade	424.164	424.324	0.160	SD601	Lohmiller silty clay loam, channeled	0.000	0.000	0.160	0.000	0.002	0.160	0.000	0.000	0.000
Steele City	SD	Meade	424.324	424.339	0.015	SD601	Lohmiller silty clay loam	0.000	0.000	0.014	0.015	0.000	0.015	0.000	0.000	0.000
Steele City	SD	Meade	424.339	424.581	0.243	SD601	Swanboy clay	0.000	0.000	0.243	0.000	0.002	0.243	0.000	0.000	0.000
Steele City	SD	Meade	424.581	424.747	0.165	SD601	Kyle clay, 2 to 6 percent slopes	0.000	0.008	0.165	0.000	0.002	0.165	0.000	0.000	0.000

Appendix K – Soils by Milepost – Steele City Segment

Pipeline Segment	State	County	Beginning Milepost	Ending Milepost	Miles	Soil Series	Soil Series Name	Wind (miles)	Water (miles)	Low revegetation on Potential (miles)	Prime Farmland (miles)	Hydric Soils (miles)	Compaction on Prone (miles)	Stoney – Rocky (miles)	Shallow Bedrock (miles)	Droghty (miles)
Steele City	SD	Meade	424.747	424.884	0.138	SD601	Lohmiller silty clay loam	0.004	0.000	0.130	0.138	0.001	0.138	0.000	0.000	0.004
Steele City	SD	Meade	424.884	425.098	0.213	SD601	Glenberg fine sandy loam	0.017	0.000	0.015	0.213	0.000	0.213	0.000	0.000	0.017
Steele City	SD	Meade	425.098	425.231	0.134	SD601	Bankard loamy fine sand	0.120	0.000	0.007	0.000	0.000	0.134	0.000	0.000	0.120
Steele City	SD	Meade	425.231	425.280	0.048	SD601	Bankard gravelly loamy sand	0.043	0.000	0.000	0.000	0.000	0.048	0.043	0.000	0.043
Steele City	SD	Meade	425.280	425.287	0.008	SD601	Water	0.000	0.000	0.000	0.000	0.000	0.008	0.000	0.000	0.000
Steele City	SD	Pennington	425.287	425.311	0.024	SD605	Water	0.000	0.000	0.000	0.000	0.000	0.024	0.000	0.000	0.000
Steele City	SD	Pennington	425.311	425.610	0.298	SD605	Riverwash	0.277	0.000	0.000	0.000	0.253	0.298	0.024	0.000	0.277
Steele City	SD	Pennington	425.610	425.663	0.053	SD605	Lohmiller silty clay	0.000	0.000	0.053	0.053	0.001	0.053	0.003	0.000	0.000
Steele City	SD	Jones	484.491	484.514	0.023	SD075	Kirley-Vivian complex, 9 to 25 percent slopes	0.000	0.023	0.000	0.000	0.000	0.023	0.007	0.000	0.000
Steele City	SD	Jones	484.514	484.652	0.139	SD075	Kirley-Mosher complex, 0 to 6 percent slopes	0.000	0.000	0.051	0.000	0.008	0.139	0.000	0.000	0.000
Steele City	SD	Jones	484.652	484.693	0.041	SD075	Okaton-Lakoma silty clays, 15 to 40 percent slopes	0.000	0.038	0.002	0.000	0.001	0.041	0.001	0.000	0.000
Steele City	SD	Jones	484.693	484.768	0.075	SD075	Kirley-Mosher complex, 0 to 6 percent slopes	0.000	0.000	0.028	0.000	0.005	0.075	0.000	0.000	0.000
Steele City	SD	Jones	484.768	485.206	0.438	SD075	Lakoma silty clay, 6 to 15 percent slopes	0.000	0.372	0.044	0.000	0.022	0.438	0.022	0.000	0.000
Steele City	SD	Jones	485.206	485.274	0.068	SD075	Kirley-Vivian complex, 9 to 25 percent slopes	0.000	0.068	0.000	0.000	0.000	0.068	0.020	0.000	0.000
Steele City	SD	Jones	485.274	485.439	0.165	SD075	Kirley-Mosher complex, 0 to 6 percent slopes	0.000	0.000	0.061	0.000	0.010	0.165	0.000	0.000	0.000
Steele City	SD	Jones	485.439	485.509	0.070	SD075	Kirley clay loam, 9 to 15 percent slopes	0.000	0.067	0.002	0.000	0.000	0.070	0.001	0.000	0.000
Steele City	SD	Jones	485.509	485.648	0.139	SD075	Kirley-Mosher complex, 0 to 6 percent slopes	0.000	0.000	0.051	0.000	0.008	0.139	0.000	0.000	0.000
Steele City	SD	Jones	485.648	485.805	0.157	SD075	Kirley clay loam, 9 to 15 percent slopes	0.000	0.149	0.005	0.000	0.000	0.157	0.003	0.000	0.000
Steele City	SD	Jones	485.805	486.242	0.438	SD075	Okaton-Wendte-Bullcreek complex, 0 to 45 percent slopes	0.000	0.249	0.136	0.000	0.013	0.438	0.000	0.000	0.000
Steele City	SD	Jones	486.242	486.389	0.146	SD075	Lakoma silty clay, 6 to 15 percent slopes	0.000	0.124	0.015	0.000	0.007	0.146	0.007	0.000	0.000
Steele City	SD	Jones	486.389	486.502	0.114	SD075	Lakoma silty clay, 3 to 6 percent slopes	0.000	0.000	0.006	0.114	0.001	0.114	0.000	0.000	0.000
Steele City	SD	Jones	486.502	486.793	0.291	SD075	Kirley clay loam, 2 to 6 percent slopes	0.000	0.000	0.006	0.291	0.009	0.291	0.000	0.000	0.000
Steele City	SD	Jones	486.793	486.820	0.027	SD075	Lakoma silty clay, 3 to 6 percent slopes	0.000	0.000	0.001	0.027	0.000	0.027	0.000	0.000	0.000
Steele City	SD	Jones	486.820	486.990	0.170	SD075	Lakoma silty clay, 6 to 9 percent slopes	0.000	0.151	0.019	0.000	0.005	0.170	0.000	0.000	0.000
Steele City	SD	Jones	486.990	487.151	0.161	SD075	Okaton-Lakoma silty clays, 15 to 40 percent slopes	0.000	0.150	0.008	0.000	0.003	0.161	0.005	0.000	0.000
Steele City	SD	Jones	487.151	487.274	0.124	SD075	Lakoma silty clay, 6 to 15 percent slopes	0.000	0.105	0.012	0.000	0.006	0.124	0.006	0.000	0.000
Steele City	SD	Jones	487.274	487.801	0.527	SD075	Okaton-Lakoma silty clays, 15 to 40 percent slopes	0.000	0.490	0.026	0.000	0.011	0.527	0.016	0.000	0.000
Steele City	SD	Jones	487.801	488.722	0.921	SD075	Lakoma silty clay, 6 to 15 percent slopes	0.000	0.783	0.092	0.000	0.046	0.921	0.046	0.000	0.000
Steele City	SD	Jones	488.722	488.839	0.117	SD075	Lakoma silty clay, 6 to 9 percent slopes	0.000	0.104	0.013	0.000	0.003	0.117	0.000	0.000	0.000
Steele City	SD	Jones	488.839	488.995	0.156	SD075	Lakoma silty clay, 6 to 15 percent slopes	0.000	0.133	0.016	0.000	0.008	0.156	0.008	0.000	0.000
Steele City	SD	Jones	488.995	489.214	0.219	SD075	Kirley clay loam, 2 to 6 percent slopes	0.000	0.000	0.004	0.219	0.007	0.219	0.000	0.000	0.000
Steele City	SD	Jones	489.214	489.334	0.120	SD075	Okaton-Lakoma silty clays, 15 to 40 percent slopes	0.000	0.112	0.006	0.000	0.002	0.120	0.004	0.000	0.000
Steele City	SD	Jones	489.334	489.476	0.141	SD075	Lakoma silty clay, 6 to 15 percent slopes	0.000	0.120	0.014	0.000	0.007	0.141	0.007	0.000	0.000
Steele City	SD	Jones	489.476	489.679	0.203	SD075	Okaton-Lakoma silty clays, 15 to 40 percent slopes	0.000	0.189	0.010	0.000	0.004	0.203	0.006	0.000	0.000
Steele City	SD	Jones	489.679	490.084	0.405	SD075	Lakoma silty clay, 6 to 15 percent slopes	0.000	0.345	0.041	0.000	0.020	0.405	0.020	0.000	0.000
Steele City	SD	Jones	490.084	490.328	0.245	SD075	Kirley clay loam, 2 to 6 percent slopes	0.000	0.000	0.005	0.245	0.007	0.245	0.000	0.000	0.000
Steele City	SD	Jones	490.328	490.407	0.078	SD075	Ree loam, 2 to 6 percent slopes	0.000	0.000	0.008	0.078	0.002	0.078	0.000	0.000	0.000
Steele City	SD	Jones	490.407	490.545	0.138	SD075	Ree loam, 0 to 2 percent slopes	0.000	0.000	0.007	0.138	0.001	0.138	0.000	0.000	0.000
Steele City	SD	Jones	490.545	490.751	0.206	SD075	Ree loam, 2 to 6 percent slopes	0.000	0.000	0.021	0.206	0.006	0.206	0.000	0.000	0.000
Steele City	SD	Jones	490.751	490.761	0.010	SD075	Kirley-Vivian complex, 9 to 25 percent slopes	0.000	0.010	0.000	0.000	0.000	0.010	0.003	0.000	0.000
Steele City	SD	Jones	490.761	490.804	0.043	SD075	Ree loam, 2 to 6 percent slopes	0.000	0.000	0.004	0.043	0.001	0.043	0.000	0.000	0.000

Appendix K – Soils by Milepost – Steele City Segment

Pipeline Segment	State	County	Beginning Milepost	Ending Milepost	Miles	Soil Series	Soil Series Name	Wind (miles)	Water (miles)	Low revegetation on Potential (miles)	Prime Farmland (miles)	Hydric Soils (miles)	Compaction on Prone (miles)	Stoney – Rocky (miles)	Shallow Bedrock (miles)	Droghty (miles)
Steele City	SD	Jones	490.804	490.998	0.194	SD075	Kirley-Vivian complex, 9 to 25 percent slopes	0.000	0.194	0.000	0.000	0.000	0.194	0.058	0.000	0.000
Steele City	SD	Jones	490.998	491.387	0.390	SD075	Kirley clay loam, 9 to 15 percent slopes	0.000	0.370	0.012	0.000	0.000	0.390	0.008	0.000	0.000
Steele City	SD	Jones	491.387	491.619	0.231	SD075	Opal clay loam, 6 to 15 percent slopes	0.000	0.208	0.220	0.000	0.012	0.231	0.000	0.000	0.000
Steele City	SD	Jones	491.619	491.930	0.312	SD075	Lakoma silty clay, 6 to 15 percent slopes	0.000	0.265	0.031	0.000	0.016	0.312	0.016	0.000	0.000
Steele City	SD	Jones	491.930	492.243	0.313	SD075	Lakoma-Vivian complex, 9 to 25 percent slopes	0.000	0.313	0.000	0.000	0.000	0.313	0.094	0.000	0.000
Steele City	SD	Jones	492.243	492.836	0.593	SD075	Lakoma silty clay, 6 to 15 percent slopes	0.000	0.504	0.059	0.000	0.030	0.593	0.030	0.000	0.000
Steele City	SD	Jones	492.836	492.848	0.012	SD075	Water	0.000	0.000	0.000	0.000	0.000	0.012	0.000	0.000	0.000
Steele City	SD	Jones	492.848	492.959	0.110	SD075	Lakoma silty clay, 6 to 15 percent slopes	0.000	0.094	0.011	0.000	0.006	0.110	0.006	0.000	0.000
Steele City	SD	Jones	492.959	493.005	0.047	SD075	Promise clay, 3 to 6 percent slopes	0.000	0.000	0.046	0.047	0.001	0.047	0.000	0.000	0.000
Steele City	SD	Jones	493.005	493.051	0.046	SD075	Lakoma silty clay, 6 to 15 percent slopes	0.000	0.039	0.005	0.000	0.002	0.046	0.002	0.000	0.000
Steele City	SD	Jones	493.051	493.225	0.174	SD075	Okaton-Wendte-Bullcreek complex, 0 to 45 percent slopes	0.000	0.099	0.054	0.000	0.005	0.174	0.000	0.000	0.000
Steele City	SD	Jones	493.225	493.376	0.152	SD075	Okaton-Lakoma silty clays, 15 to 40 percent slopes	0.000	0.141	0.008	0.000	0.003	0.152	0.005	0.000	0.000
Steele City	SD	Jones	493.376	493.634	0.258	SD075	Lakoma silty clay, 3 to 6 percent slopes	0.000	0.000	0.013	0.258	0.003	0.258	0.000	0.000	0.000
Steele City	SD	Jones	493.634	493.679	0.045	SD075	Lakoma silty clay, 6 to 15 percent slopes	0.000	0.038	0.005	0.000	0.002	0.045	0.002	0.000	0.000
Steele City	SD	Jones	493.679	493.742	0.063	SD075	Lakoma silty clay, 3 to 6 percent slopes	0.000	0.000	0.003	0.063	0.001	0.063	0.000	0.000	0.000
Steele City	SD	Jones	493.742	493.873	0.131	SD075	Kirley clay loam, 2 to 6 percent slopes	0.000	0.000	0.003	0.131	0.004	0.131	0.000	0.000	0.000
Steele City	SD	Jones	493.873	493.939	0.066	SD075	Kirley clay loam, 0 to 2 percent slopes	0.000	0.000	0.001	0.066	0.002	0.066	0.000	0.000	0.000
Steele City	SD	Jones	493.939	493.995	0.056	SD075	Kirley-Mosher complex, 0 to 6 percent slopes	0.000	0.000	0.021	0.000	0.003	0.056	0.000	0.000	0.000
Steele City	SD	Jones	493.995	494.125	0.130	SD075	Lakoma silty clay, 6 to 15 percent slopes	0.000	0.111	0.013	0.000	0.007	0.130	0.007	0.000	0.000
Steele City	SD	Jones	494.125	494.420	0.295	SD075	Kirley clay loam, 2 to 6 percent slopes	0.000	0.000	0.006	0.295	0.009	0.295	0.000	0.000	0.000
Steele City	SD	Jones	494.420	494.711	0.290	SD075	Mosher-Capa silt loams	0.000	0.000	0.270	0.000	0.009	0.290	0.000	0.000	0.000
Steele City	SD	Jones	494.711	494.840	0.130	SD075	Promise clay, 0 to 3 percent slopes	0.000	0.000	0.127	0.130	0.003	0.130	0.000	0.000	0.000
Steele City	SD	Jones	494.840	494.858	0.018	SD075	Lakoma silty clay, 6 to 9 percent slopes	0.000	0.016	0.002	0.000	0.001	0.018	0.000	0.000	0.000
Steele City	SD	Jones	494.858	495.041	0.183	SD075	Promise clay, 0 to 3 percent slopes	0.000	0.000	0.179	0.183	0.004	0.183	0.000	0.000	0.000
Steele City	SD	Jones	495.041	495.719	0.678	SD075	Lakoma silty clay, 6 to 15 percent slopes	0.000	0.576	0.068	0.000	0.034	0.678	0.034	0.000	0.000
Steele City	SD	Jones	495.719	495.798	0.079	SD075	Lakoma silty clay, 6 to 9 percent slopes	0.000	0.070	0.009	0.000	0.002	0.079	0.000	0.000	0.000
Steele City	SD	Jones	495.798	495.827	0.029	SD075	Promise clay, 3 to 6 percent slopes	0.000	0.000	0.029	0.029	0.001	0.029	0.000	0.000	0.000
Steele City	SD	Jones	495.827	495.833	0.006	SD075	Lakoma silty clay, 6 to 9 percent slopes	0.000	0.005	0.001	0.000	0.000	0.006	0.000	0.000	0.000
Steele City	SD	Jones	495.833	496.155	0.322	SD075	Lakoma silty clay, 6 to 15 percent slopes	0.000	0.274	0.032	0.000	0.016	0.322	0.016	0.000	0.000
Steele City	SD	Jones	496.155	496.269	0.114	SD075	Kirley clay loam, 2 to 6 percent slopes	0.000	0.000	0.002	0.114	0.003	0.114	0.000	0.000	0.000
Steele City	SD	Jones	496.269	496.613	0.344	SD075	Lakoma silty clay, 6 to 9 percent slopes	0.000	0.306	0.038	0.000	0.010	0.344	0.000	0.000	0.000
Steele City	SD	Jones	496.613	496.760	0.148	SD075	Okaton-Wendte-Bullcreek complex, 0 to 45 percent slopes	0.000	0.084	0.046	0.000	0.004	0.148	0.000	0.000	0.000
Steele City	SD	Jones	496.760	496.833	0.072	SD075	Kirley clay loam, 9 to 15 percent slopes	0.000	0.069	0.002	0.000	0.000	0.072	0.001	0.000	0.000
Steele City	SD	Jones	496.833	497.267	0.435	SD075	Kirley-Vivian complex, 9 to 25 percent slopes	0.000	0.435	0.000	0.000	0.000	0.435	0.130	0.000	0.000
Steele City	SD	Jones	497.267	497.361	0.093	SD075	Promise clay, 3 to 6 percent slopes	0.000	0.000	0.091	0.093	0.002	0.093	0.000	0.000	0.000
Steele City	SD	Jones	497.361	497.399	0.039	SD075	Kirley-Vivian complex, 9 to 25 percent slopes	0.000	0.039	0.000	0.000	0.000	0.039	0.012	0.000	0.000
Steele City	SD	Jones	497.399	497.807	0.407	SD075	Promise clay, 3 to 6 percent slopes	0.000	0.000	0.399	0.407	0.008	0.407	0.000	0.000	0.000
Steele City	SD	Jones	497.807	497.958	0.152	SD075	Lakoma silty clay, 6 to 15 percent slopes	0.000	0.129	0.015	0.000	0.008	0.152	0.008	0.000	0.000
Steele City	SD	Jones	497.958	498.166	0.207	SD075	Promise clay, 6 to 9 percent slopes	0.000	0.193	0.201	0.000	0.000	0.207	0.000	0.000	0.000
Steele City	SD	Jones	498.166	498.357	0.191	SD075	Lakoma silty clay, 6 to 15 percent slopes	0.000	0.162	0.019	0.000	0.010	0.191	0.010	0.000	0.000
Steele City	SD	Jones	498.357	498.528	0.171	SD075	Ree loam, 2 to 6 percent slopes	0.000	0.000	0.017	0.171	0.005	0.171	0.000	0.000	0.000
Steele City	SD	Jones	498.528	498.610	0.082	SD075	Capa silt loam, 0 to 6 percent slopes	0.000	0.000	0.079	0.000	0.000	0.082	0.000	0.000	0.000
Steele City	SD	Jones	498.610	498.744	0.135	SD075	Lakoma silty clay, 3 to 6 percent slopes	0.000	0.000	0.007	0.135	0.001	0.135	0.000	0.000	0.000

Appendix K – Soils by Milepost – Steele City Segment

Pipeline Segment	State	County	Beginning Milepost	Ending Milepost	Miles	Soil Series	Soil Series Name	Wind (miles)	Water (miles)	Low revegetation on Potential (miles)	Prime Farmland (miles)	Hydric Soils (miles)	Compaction on Prone (miles)	Stoney – Rocky (miles)	Shallow Bedrock (miles)	Droghty (miles)
Steele City	SD	Jones	498.744	498.796	0.052	SD075	Capa silt loam, 0 to 6 percent slopes	0.000	0.000	0.050	0.000	0.000	0.052	0.000	0.000	0.000
Steele City	SD	Jones	498.796	499.215	0.419	SD075	Promise clay, 3 to 6 percent slopes	0.000	0.000	0.410	0.419	0.008	0.419	0.000	0.000	0.000
Steele City	SD	Jones	499.215	499.701	0.487	SD075	Promise clay, 0 to 3 percent slopes	0.000	0.000	0.477	0.487	0.010	0.487	0.000	0.000	0.000
Steele City	SD	Jones	499.701	499.785	0.084	SD075	Opal clay, 3 to 6 percent slopes	0.000	0.000	0.084	0.084	0.001	0.084	0.000	0.000	0.000
Steele City	SD	Jones	499.785	500.017	0.232	SD075	Promise clay, 0 to 3 percent slopes	0.000	0.000	0.227	0.232	0.005	0.232	0.000	0.000	0.000
Steele City	SD	Jones	500.017	500.180	0.163	SD075	Lakoma silty clay, 3 to 6 percent slopes	0.000	0.000	0.008	0.163	0.002	0.163	0.000	0.000	0.000
Steele City	SD	Jones	500.180	500.214	0.034	SD075	Promise clay, 0 to 3 percent slopes	0.000	0.000	0.033	0.034	0.001	0.034	0.000	0.000	0.000
Steele City	SD	Jones	500.214	500.390	0.177	SD075	Lakoma silty clay, 6 to 9 percent slopes	0.000	0.157	0.019	0.000	0.005	0.177	0.000	0.000	0.000
Steele City	SD	Jones	500.390	500.515	0.125	SD075	Lakoma silty clay, 6 to 15 percent slopes	0.000	0.106	0.012	0.000	0.006	0.125	0.006	0.000	0.000
Steele City	SD	Jones	500.515	500.693	0.178	SD075	Lakoma silty clay, 6 to 9 percent slopes	0.000	0.159	0.020	0.000	0.005	0.178	0.000	0.000	0.000
Steele City	SD	Jones	500.693	500.885	0.191	SD075	Lakoma silty clay, 3 to 6 percent slopes	0.000	0.000	0.010	0.191	0.002	0.191	0.000	0.000	0.000
Steele City	SD	Jones	500.885	501.047	0.163	SD075	Lakoma silty clay, 6 to 9 percent slopes	0.000	0.145	0.018	0.000	0.005	0.163	0.000	0.000	0.000
Steele City	SD	Jones	501.047	501.225	0.178	SD075	Lakoma silty clay, 3 to 6 percent slopes	0.000	0.000	0.009	0.178	0.002	0.178	0.000	0.000	0.000
Steele City	SD	Jones	501.225	501.441	0.215	SD075	Okaton-Wendte-Bullcreek complex, 0 to 45 percent slopes	0.000	0.123	0.067	0.000	0.006	0.215	0.000	0.000	0.000
Steele City	SD	Jones	501.441	501.628	0.188	SD075	Promise-Capa complex	0.000	0.000	0.182	0.000	0.006	0.188	0.000	0.000	0.000
Steele City	SD	Jones	501.628	501.777	0.148	SD075	Okaton-Wendte-Bullcreek complex, 0 to 45 percent slopes	0.000	0.085	0.046	0.000	0.004	0.148	0.000	0.000	0.000
Steele City	SD	Jones	501.777	501.892	0.115	SD075	Kirley-Vivian complex, 9 to 25 percent slopes	0.000	0.115	0.000	0.000	0.000	0.081	0.035	0.000	0.000
Steele City	SD	Jones	501.892	501.951	0.060	SD075	Lakoma silty clay, 6 to 15 percent slopes	0.000	0.051	0.006	0.000	0.003	0.057	0.003	0.000	0.000
Steele City	SD	Jones	501.951	501.958	0.007	SD075	Kirley-Vivian complex, 9 to 25 percent slopes	0.000	0.007	0.000	0.000	0.000	0.005	0.002	0.000	0.000
Steele City	SD	Jones	501.958	501.983	0.025	SD075	Lakoma silty clay, 6 to 15 percent slopes	0.000	0.022	0.003	0.000	0.001	0.024	0.001	0.000	0.000
Steele City	SD	Jones	501.983	502.079	0.096	SD075	Kirley-Vivian complex, 9 to 25 percent slopes	0.000	0.096	0.000	0.000	0.000	0.067	0.029	0.000	0.000
Steele City	SD	Jones	502.079	502.330	0.251	SD075	Lakoma silty clay, 6 to 15 percent slopes	0.000	0.214	0.025	0.000	0.013	0.239	0.013	0.000	0.000
Steele City	SD	Jones	502.330	502.412	0.082	SD075	Lakoma silty clay, 3 to 6 percent slopes	0.000	0.000	0.004	0.082	0.001	0.082	0.000	0.000	0.000
Steele City	SD	Jones	502.412	502.737	0.325	SD075	Lakoma silty clay, 6 to 15 percent slopes	0.000	0.276	0.032	0.000	0.016	0.309	0.016	0.000	0.000
Steele City	SD	Jones	502.737	502.853	0.116	SD075	Lakoma silty clay, 6 to 9 percent slopes	0.000	0.103	0.013	0.000	0.003	0.116	0.000	0.000	0.000
Steele City	SD	Jones	502.853	503.181	0.328	SD075	Opal clay, 6 to 9 percent slopes	0.000	0.315	0.325	0.000	0.003	0.328	0.000	0.000	0.000
Steele City	SD	Jones	503.181	503.861	0.680	SD075	Lakoma silty clay, 6 to 15 percent slopes	0.000	0.578	0.068	0.000	0.034	0.646	0.034	0.000	0.000
Steele City	SD	Jones	503.861	504.097	0.235	SD075	Opal clay, 6 to 15 percent slopes	0.000	0.207	0.228	0.000	0.009	0.235	0.000	0.000	0.000
Steele City	SD	Jones	504.097	504.246	0.150	SD075	Opal clay, 6 to 9 percent slopes	0.000	0.144	0.148	0.000	0.001	0.150	0.000	0.000	0.000
Steele City	SD	Jones	504.246	504.705	0.458	SD075	Opal clay, 6 to 15 percent slopes	0.000	0.403	0.445	0.000	0.018	0.458	0.000	0.000	0.000
Steele City	SD	Jones	504.705	505.092	0.388	SD075	Opal clay, 6 to 9 percent slopes	0.000	0.372	0.384	0.000	0.004	0.388	0.000	0.000	0.000
Steele City	SD	Jones	505.092	505.661	0.569	SD075	Opal clay, 6 to 15 percent slopes	0.000	0.500	0.552	0.000	0.023	0.569	0.000	0.000	0.000
Steele City	SD	Jones	505.661	505.832	0.171	SD075	Sansarc-Opal clays, 9 to 40 percent slopes	0.000	0.157	0.074	0.000	0.000	0.168	0.003	0.000	0.000
Steele City	SD	Jones	505.832	505.960	0.128	SD075	Opal clay, 6 to 15 percent slopes	0.000	0.113	0.124	0.000	0.005	0.128	0.000	0.000	0.000
Steele City	SD	Jones	505.960	506.166	0.206	SD075	Opal clay, 6 to 9 percent slopes	0.000	0.197	0.203	0.000	0.002	0.206	0.000	0.000	0.000
Steele City	SD	Jones	506.166	506.720	0.554	SD075	Opal clay, 6 to 15 percent slopes	0.000	0.488	0.537	0.000	0.022	0.554	0.000	0.000	0.000
Steele City	SD	Jones	506.720	506.763	0.043	SD075	Bullcreek clay, 0 to 6 percent slopes	0.000	0.000	0.042	0.000	0.000	0.043	0.000	0.000	0.000
Steele City	SD	Jones	506.763	506.812	0.049	SD075	Opal clay, 6 to 15 percent slopes	0.000	0.043	0.047	0.000	0.002	0.049	0.000	0.000	0.000
Steele City	SD	Jones	506.812	507.014	0.202	SD075	Opal clay, 6 to 9 percent slopes	0.000	0.194	0.200	0.000	0.002	0.202	0.000	0.000	0.000
Steele City	SD	Jones	507.014	507.539	0.525	SD075	Opal clay, 6 to 15 percent slopes	0.000	0.462	0.509	0.000	0.021	0.525	0.000	0.000	0.000
Steele City	SD	Jones	507.539	507.633	0.095	SD075	Opal clay, 6 to 9 percent slopes	0.000	0.091	0.094	0.000	0.001	0.095	0.000	0.000	0.000
Steele City	SD	Jones	507.633	507.995	0.362	SD075	Opal clay, 3 to 6 percent slopes	0.000	0.000	0.362	0.362	0.004	0.362	0.000	0.000	0.000
Steele City	SD	Jones	507.995	508.099	0.103	SD075	Opal clay, 6 to 15 percent slopes	0.000	0.091	0.100	0.000	0.004	0.103	0.000	0.000	0.000

Appendix K – Soils by Milepost – Steele City Segment

Pipeline Segment	State	County	Beginning Milepost	Ending Milepost	Miles	Soil Series	Soil Series Name	Wind (miles)	Water (miles)	Low revegetation on Potential (miles)	Prime Farmland (miles)	Hydric Soils (miles)	Compaction on Prone (miles)	Stoney – Rocky (miles)	Shallow Bedrock (miles)	Droghty (miles)
Steele City	SD	Jones	508.099	508.253	0.155	SD075	Opal clay, 6 to 9 percent slopes	0.000	0.148	0.153	0.000	0.002	0.155	0.000	0.000	0.000
Steele City	SD	Jones	508.253	508.558	0.305	SD075	Opal clay, 3 to 6 percent slopes	0.000	0.000	0.305	0.305	0.003	0.305	0.000	0.000	0.000
Steele City	SD	Jones	508.558	508.955	0.397	SD075	Opal clay, 6 to 15 percent slopes	0.000	0.349	0.385	0.000	0.016	0.397	0.000	0.000	0.000
Steele City	SD	Jones	508.955	509.054	0.099	SD075	Opal clay, 6 to 9 percent slopes	0.000	0.095	0.098	0.000	0.001	0.099	0.000	0.000	0.000
Steele City	SD	Jones	509.054	509.472	0.418	SD075	Opal clay, 6 to 15 percent slopes	0.000	0.367	0.405	0.000	0.017	0.418	0.000	0.000	0.000
Steele City	SD	Jones	509.472	510.586	1.114	SD075	Lakoma silty clay, 6 to 15 percent slopes	0.000	0.947	0.111	0.000	0.056	1.059	0.056	0.000	0.000
Steele City	SD	Jones	510.586	510.628	0.042	SD075	Promise clay, 3 to 6 percent slopes	0.000	0.000	0.041	0.042	0.001	0.042	0.000	0.000	0.000
Steele City	SD	Jones	510.628	510.714	0.086	SD075	Opal clay, 6 to 9 percent slopes	0.000	0.083	0.085	0.000	0.001	0.086	0.000	0.000	0.000
Steele City	SD	Jones	510.714	510.904	0.190	SD075	Promise clay, 3 to 6 percent slopes	0.000	0.000	0.186	0.190	0.004	0.190	0.000	0.000	0.000
Steele City	SD	Jones	510.904	510.983	0.079	SD075	Opal clay, 3 to 6 percent slopes	0.000	0.000	0.079	0.079	0.001	0.079	0.000	0.000	0.000
Steele City	SD	Jones	510.983	511.122	0.139	SD075	Promise clay, 3 to 6 percent slopes	0.000	0.000	0.137	0.139	0.003	0.139	0.000	0.000	0.000
Steele City	SD	Jones	511.122	511.262	0.140	SD075	Opal clay, 3 to 6 percent slopes	0.000	0.000	0.140	0.140	0.001	0.140	0.000	0.000	0.000
Steele City	SD	Jones	511.262	511.475	0.213	SD075	Promise clay, 3 to 6 percent slopes	0.000	0.000	0.209	0.213	0.004	0.213	0.000	0.000	0.000
Steele City	SD	Jones	511.475	511.536	0.061	SD075	Lakoma silty clay, 6 to 9 percent slopes	0.000	0.054	0.007	0.000	0.002	0.061	0.000	0.000	0.000
Steele City	SD	Jones	511.536	511.611	0.075	SD075	Lakoma silty clay, 6 to 15 percent slopes	0.000	0.064	0.008	0.000	0.004	0.071	0.004	0.000	0.000
Steele City	SD	Jones	511.611	511.985	0.375	SD075	Opal clay, 6 to 15 percent slopes	0.000	0.330	0.363	0.000	0.015	0.375	0.000	0.000	0.000
Steele City	SD	Jones	511.985	512.169	0.184	SD075	Lakoma silty clay, 6 to 9 percent slopes	0.000	0.163	0.020	0.000	0.006	0.184	0.000	0.000	0.000
Steele City	SD	Jones	512.169	512.293	0.124	SD075	Lakoma silty clay, 6 to 15 percent slopes	0.000	0.105	0.012	0.000	0.006	0.117	0.006	0.000	0.000
Steele City	SD	Jones	512.293	512.391	0.098	SD075	Promise clay, 3 to 6 percent slopes	0.000	0.000	0.096	0.098	0.002	0.098	0.000	0.000	0.000
Steele City	SD	Jones	512.391	512.506	0.116	SD075	Opal clay, 6 to 9 percent slopes	0.000	0.111	0.115	0.000	0.001	0.116	0.000	0.000	0.000
Steele City	SD	Jones	512.506	512.920	0.414	SD075	Opal clay, 6 to 15 percent slopes	0.000	0.364	0.401	0.000	0.017	0.414	0.000	0.000	0.000
Steele City	SD	Jones	512.920	513.949	1.029	SD075	Lakoma silty clay, 6 to 15 percent slopes	0.000	0.874	0.103	0.000	0.051	0.977	0.051	0.000	0.000
Steele City	SD	Jones	513.949	514.298	0.349	SD075	Opal clay, 3 to 6 percent slopes	0.000	0.000	0.349	0.349	0.003	0.349	0.000	0.000	0.000
Steele City	SD	Jones	514.298	514.410	0.112	SD075	Promise-Bullcreek clays	0.000	0.003	0.100	0.000	0.004	0.112	0.000	0.000	0.000
Steele City	SD	Jones	514.410	514.687	0.277	SD075	Opal clay, 3 to 6 percent slopes	0.000	0.000	0.277	0.277	0.003	0.277	0.000	0.000	0.000
Steele City	SD	Jones	514.687	514.743	0.055	SD075	Promise clay, 0 to 3 percent slopes	0.000	0.000	0.054	0.055	0.001	0.055	0.000	0.000	0.000
Steele City	SD	Jones	514.743	514.797	0.055	SD075	Lakoma silty clay, 6 to 9 percent slopes	0.000	0.049	0.006	0.000	0.002	0.055	0.000	0.000	0.000
Steele City	SD	Jones	514.797	514.944	0.147	SD075	Opal clay, 3 to 6 percent slopes	0.000	0.000	0.147	0.147	0.001	0.147	0.000	0.000	0.000
Steele City	SD	Jones	514.944	515.023	0.079	SD075	Promise clay, 0 to 3 percent slopes	0.000	0.000	0.078	0.079	0.002	0.079	0.000	0.000	0.000
Steele City	SD	Jones	515.023	515.144	0.120	SD075	Opal clay, 3 to 6 percent slopes	0.000	0.000	0.120	0.120	0.001	0.120	0.000	0.000	0.000
Steele City	SD	Jones	515.144	515.347	0.203	SD075	Lakoma silty clay, 3 to 6 percent slopes	0.000	0.000	0.010	0.203	0.002	0.203	0.000	0.000	0.000
Steele City	SD	Jones	515.347	515.604	0.257	SD075	Lakoma silty clay, 6 to 9 percent slopes	0.000	0.229	0.028	0.000	0.008	0.257	0.000	0.000	0.000
Steele City	SD	Jones	515.604	515.854	0.250	SD075	Opal clay, 3 to 6 percent slopes	0.000	0.000	0.250	0.250	0.002	0.250	0.000	0.000	0.000
Steele City	SD	Jones	515.854	515.899	0.045	SD075	Herdcamp-Bullcreek complex	0.000	0.001	0.043	0.000	0.027	0.045	0.000	0.000	0.000
Steele City	SD	Jones	515.899	515.988	0.090	SD075	Lakoma silty clay, 6 to 15 percent slopes	0.000	0.076	0.009	0.000	0.004	0.085	0.004	0.000	0.000
Steele City	SD	Jones	515.988	516.135	0.147	SD075	Opal clay, 6 to 9 percent slopes	0.000	0.141	0.145	0.000	0.001	0.147	0.000	0.000	0.000
Steele City	SD	Jones	516.135	516.605	0.470	SD075	Opal clay, 3 to 6 percent slopes	0.000	0.000	0.470	0.470	0.005	0.470	0.000	0.000	0.000
Steele City	SD	Jones	516.605	516.709	0.104	SD075	Promise clay, 3 to 6 percent slopes	0.000	0.000	0.102	0.104	0.002	0.104	0.000	0.000	0.000
Steele City	SD	Jones	516.709	516.802	0.094	SD075	Opal clay, 3 to 6 percent slopes	0.000	0.000	0.094	0.094	0.001	0.094	0.000	0.000	0.000
Steele City	SD	Jones	516.802	516.891	0.089	SD075	Lakoma silty clay, 6 to 9 percent slopes	0.000	0.079	0.010	0.000	0.003	0.089	0.000	0.000	0.000
Steele City	SD	Jones	516.891	517.495	0.604	SD075	Lakoma silty clay, 6 to 15 percent slopes	0.000	0.514	0.060	0.000	0.030	0.574	0.030	0.000	0.000
Steele City	SD	Jones	517.495	517.519	0.024	SD075	Lakoma silty clay, 3 to 6 percent slopes	0.000	0.000	0.001	0.024	0.000	0.024	0.000	0.000	0.000
Steele City	SD	Jones	517.519	517.999	0.480	SD075	Lakoma silty clay, 6 to 15 percent slopes	0.000	0.408	0.048	0.000	0.024	0.456	0.024	0.000	0.000
Steele City	SD	Jones	517.999	518.225	0.226	SD075	Opal clay loam, 6 to 15 percent slopes	0.000	0.203	0.214	0.000	0.011	0.226	0.000	0.000	0.000

Appendix K – Soils by Milepost – Steele City Segment

Pipeline Segment	State	County	Beginning Milepost	Ending Milepost	Miles	Soil Series	Soil Series Name	Wind (miles)	Water (miles)	Low revegetation on Potential (miles)	Prime Farmland (miles)	Hydric Soils (miles)	Compaction on Prone (miles)	Stoney – Rocky (miles)	Shallow Bedrock (miles)	Droghty (miles)
Steele City	SD	Jones	518.225	518.554	0.330	SD075	Opal clay loam, 6 to 9 percent slopes	0.000	0.313	0.330	0.330	0.016	0.330	0.000	0.000	0.000
Steele City	SD	Jones	518.554	518.639	0.085	SD075	Bullcreek clay, 0 to 6 percent slopes	0.000	0.000	0.083	0.000	0.000	0.085	0.000	0.000	0.000
Steele City	SD	Jones	518.639	518.734	0.095	SD075	Promise clay, 0 to 3 percent slopes	0.000	0.000	0.093	0.095	0.002	0.095	0.000	0.000	0.000
Steele City	SD	Jones	518.734	518.907	0.173	SD075	Opal clay loam, 6 to 9 percent slopes	0.000	0.164	0.173	0.173	0.009	0.173	0.000	0.000	0.000
Steele City	SD	Jones	518.907	518.924	0.018	SD075	Promise clay, 0 to 3 percent slopes	0.000	0.000	0.017	0.018	0.000	0.018	0.000	0.000	0.000
Steele City	SD	Jones	518.924	519.021	0.097	SD075	Promise-Bullcreek clays	0.000	0.003	0.086	0.000	0.004	0.097	0.000	0.000	0.000
Steele City	SD	Jones	519.021	519.305	0.284	SD075	Promise clay, 0 to 3 percent slopes	0.000	0.000	0.278	0.284	0.006	0.284	0.000	0.000	0.000
Steele City	SD	Jones	519.305	519.406	0.101	SD075	Bullcreek clay, 0 to 6 percent slopes	0.000	0.000	0.099	0.000	0.000	0.101	0.000	0.000	0.000
Steele City	SD	Jones	519.406	519.797	0.391	SD075	Promise clay, 0 to 3 percent slopes	0.000	0.000	0.383	0.391	0.008	0.391	0.000	0.000	0.000
Steele City	SD	Jones	519.797	520.028	0.231	SD075	Millboro silty clay loam, 3 to 6 percent slopes	0.000	0.000	0.226	0.231	0.005	0.231	0.000	0.000	0.000
Steele City	SD	Jones	520.028	520.392	0.364	SD075	Millboro silty clay loam, 0 to 3 percent slopes	0.000	0.000	0.357	0.364	0.007	0.364	0.000	0.000	0.000
Steele City	SD	Jones	520.392	520.602	0.210	SD075	Promise-Bullcreek clays	0.000	0.006	0.187	0.000	0.008	0.210	0.000	0.000	0.000
Steele City	SD	Jones	520.602	520.685	0.083	SD075	Lakoma silty clay, 3 to 6 percent slopes	0.000	0.000	0.004	0.083	0.001	0.083	0.000	0.000	0.000
Steele City	SD	Jones	520.685	520.904	0.219	SD075	Bullcreek clay, 0 to 6 percent slopes	0.000	0.000	0.215	0.000	0.000	0.219	0.000	0.000	0.000
Steele City	SD	Jones	520.904	521.139	0.235	SD075	Promise clay, 0 to 3 percent slopes	0.000	0.000	0.230	0.235	0.005	0.235	0.000	0.000	0.000
Steele City	SD	Jones	521.139	521.192	0.053	SD075	Bullcreek clay, 0 to 6 percent slopes	0.000	0.000	0.052	0.000	0.000	0.053	0.000	0.000	0.000
Steele City	SD	Jones	521.192	521.467	0.275	SD075	Millboro silty clay loam, 0 to 3 percent slopes	0.000	0.000	0.270	0.275	0.006	0.275	0.000	0.000	0.000
Steele City	SD	Jones	521.467	521.607	0.140	SD075	Promise-Bullcreek clays	0.000	0.004	0.125	0.000	0.006	0.140	0.000	0.000	0.000
Steele City	SD	Jones	521.607	521.689	0.082	SD075	Millboro silty clay loam, 0 to 3 percent slopes	0.000	0.000	0.080	0.082	0.002	0.082	0.000	0.000	0.000
Steele City	SD	Jones	521.689	521.803	0.114	SD075	Lakoma silty clay, 3 to 6 percent slopes	0.000	0.000	0.006	0.114	0.001	0.114	0.000	0.000	0.000
Steele City	SD	Jones	521.803	521.970	0.168	SD075	Millboro silty clay loam, 3 to 6 percent slopes	0.000	0.000	0.164	0.168	0.003	0.168	0.000	0.000	0.000
Steele City	SD	Jones	521.970	521.991	0.021	SD075	Millboro silty clay loam, 0 to 3 percent slopes	0.000	0.000	0.020	0.021	0.000	0.021	0.000	0.000	0.000
Steele City	SD	Jones	521.991	522.368	0.378	SD075	Witten silty clay	0.000	0.000	0.374	0.378	0.004	0.378	0.000	0.000	0.000
Steele City	SD	Jones	522.368	522.486	0.118	SD075	Millboro silty clay loam, 3 to 6 percent slopes	0.000	0.000	0.115	0.118	0.002	0.118	0.000	0.000	0.000
Steele City	SD	Jones	522.486	522.725	0.239	SD075	Millboro silty clay loam, 6 to 9 percent slopes	0.000	0.222	0.232	0.000	0.000	0.239	0.000	0.000	0.000
Steele City	SD	Jones	522.725	523.204	0.480	SD075	Millboro silty clay loam, 3 to 6 percent slopes	0.000	0.000	0.470	0.480	0.010	0.480	0.000	0.000	0.000
Steele City	SD	Jones	523.204	523.617	0.412	SD075	Promise clay, 0 to 3 percent slopes	0.000	0.000	0.404	0.412	0.008	0.412	0.000	0.000	0.000
Steele City	SD	Lyman	523.617	524.262	0.645	SD085	Promise clay, 0 to 3 percent slopes	0.000	0.000	0.645	0.645	0.006	0.645	0.000	0.000	0.000
Steele City	SD	Lyman	524.262	524.318	0.056	SD085	Millboro silty clay, 3 to 6 percent slopes	0.000	0.000	0.054	0.056	0.002	0.056	0.000	0.000	0.000
Steele City	SD	Lyman	524.318	524.845	0.527	SD085	Millboro silty clay, 0 to 3 percent slopes	0.000	0.000	0.511	0.527	0.016	0.527	0.000	0.000	0.000
Steele City	SD	Lyman	524.845	524.899	0.054	SD085	Millboro silty clay, 3 to 6 percent slopes	0.000	0.000	0.053	0.054	0.002	0.054	0.000	0.000	0.000
Steele City	SD	Lyman	524.899	524.979	0.080	SD085	Millboro silty clay, 0 to 3 percent slopes	0.000	0.000	0.078	0.080	0.002	0.080	0.000	0.000	0.000
Steele City	SD	Lyman	524.979	525.087	0.108	SD085	Millboro silty clay, 3 to 6 percent slopes	0.000	0.000	0.104	0.108	0.003	0.108	0.000	0.000	0.000
Steele City	SD	Lyman	525.087	525.087	0.000	SD085	Witten silty clay	0.000	0.000	0.000	0.000	0.000	0.000	0.000	0.000	0.000
Steele City	SD	Lyman	525.087	525.200	0.113	SD085	Kolls silty clay	0.000	0.000	0.011	0.000	0.107	0.113	0.000	0.000	0.000
Steele City	SD	Lyman	525.200	525.313	0.114	SD085	Millboro silty clay, 3 to 6 percent slopes	0.000	0.000	0.110	0.114	0.003	0.114	0.000	0.000	0.000
Steele City	SD	Lyman	525.313	525.608	0.294	SD085	Witten silty clay	0.000	0.000	0.285	0.294	0.009	0.294	0.000	0.000	0.000
Steele City	SD	Lyman	525.608	525.856	0.248	SD085	Millboro silty clay, 3 to 6 percent slopes	0.000	0.000	0.240	0.248	0.007	0.248	0.000	0.000	0.000
Steele City	SD	Lyman	525.856	526.127	0.271	SD085	Witten silty clay	0.000	0.000	0.263	0.271	0.008	0.271	0.000	0.000	0.000
Steele City	SD	Lyman	526.127	526.757	0.631	SD085	Millboro silty clay, 3 to 6 percent slopes	0.000	0.000	0.612	0.631	0.019	0.631	0.000	0.000	0.000
Steele City	SD	Lyman	526.757	526.836	0.079	SD085	Promise clay, 0 to 3 percent slopes	0.000	0.000	0.079	0.079	0.001	0.079	0.000	0.000	0.000
Steele City	SD	Lyman	526.836	526.847	0.011	SD085	Witten silty clay	0.000	0.000	0.011	0.011	0.000	0.011	0.000	0.000	0.000
Steele City	SD	Lyman	526.847	527.246	0.399	SD085	Millboro silty clay, 3 to 6 percent slopes	0.000	0.000	0.387	0.399	0.012	0.399	0.000	0.000	0.000
Steele City	SD	Lyman	527.246	527.397	0.151	SD085	Millboro-Boro silty clays, 6 to 9 percent slopes	0.000	0.151	0.079	0.000	0.000	0.151	0.000	0.000	0.000

Appendix K – Soils by Milepost – Steele City Segment

Pipeline Segment	State	County	Beginning Milepost	Ending Milepost	Miles	Soil Series	Soil Series Name	Wind (miles)	Water (miles)	Low revegetation on Potential (miles)	Prime Farmland (miles)	Hydric Soils (miles)	Compaction on Prone (miles)	Stoney – Rocky (miles)	Shallow Bedrock (miles)	Droghty (miles)
Steele City	SD	Lyman	527.397	528.300	0.903	SD085	Millboro silty clay, 3 to 6 percent slopes	0.000	0.000	0.875	0.903	0.027	0.903	0.000	0.000	0.000
Steele City	SD	Lyman	528.300	528.435	0.135	SD085	Millboro-Boro silty clays, 6 to 9 percent slopes	0.000	0.135	0.070	0.000	0.000	0.135	0.000	0.000	0.000
Steele City	SD	Lyman	528.435	528.551	0.116	SD085	Bullcreek clay, 0 to 6 percent slopes	0.000	0.000	0.113	0.000	0.001	0.116	0.000	0.000	0.000
Steele City	SD	Lyman	528.551	529.214	0.663	SD085	Millboro silty clay, 3 to 6 percent slopes	0.000	0.000	0.643	0.663	0.020	0.663	0.000	0.000	0.000
Steele City	SD	Lyman	529.214	529.324	0.111	SD085	Bullcreek clay, 0 to 6 percent slopes	0.000	0.000	0.107	0.000	0.001	0.111	0.000	0.000	0.000
Steele City	SD	Lyman	529.324	529.355	0.031	SD085	Lakoma silty clay, 6 to 9 percent slopes	0.000	0.030	0.003	0.000	0.000	0.031	0.000	0.000	0.000
Steele City	SD	Lyman	529.355	529.924	0.569	SD085	Millboro silty clay, 3 to 6 percent slopes	0.000	0.000	0.552	0.569	0.017	0.569	0.000	0.000	0.000
Steele City	SD	Lyman	529.924	530.140	0.215	SD085	Millboro silty clay, 0 to 3 percent slopes	0.000	0.000	0.209	0.215	0.006	0.215	0.000	0.000	0.000
Steele City	SD	Lyman	530.140	530.629	0.490	SD085	Millboro silty clay, 3 to 6 percent slopes	0.000	0.000	0.475	0.490	0.015	0.490	0.000	0.000	0.000
Steele City	SD	Lyman	530.629	531.022	0.393	SD085	Millboro silty clay, 0 to 3 percent slopes	0.000	0.000	0.381	0.393	0.012	0.393	0.000	0.000	0.000
Steele City	SD	Lyman	531.022	531.159	0.137	SD085	Millboro silty clay, 3 to 6 percent slopes	0.000	0.000	0.133	0.137	0.004	0.137	0.000	0.000	0.000
Steele City	SD	Lyman	531.159	531.389	0.230	SD085	Millboro-Boro silty clays, 6 to 9 percent slopes	0.000	0.230	0.119	0.000	0.000	0.230	0.000	0.000	0.000
Steele City	SD	Lyman	531.389	531.568	0.179	SD085	Sansarc-Opal clays, 9 to 40 percent slopes	0.000	0.172	0.084	0.000	0.002	0.174	0.005	0.000	0.000
Steele City	SD	Lyman	531.568	531.645	0.077	SD085	Bullcreek clay, 0 to 6 percent slopes	0.000	0.000	0.074	0.000	0.001	0.077	0.000	0.000	0.000
Steele City	SD	Lyman	531.645	531.819	0.174	SD085	Sansarc-Opal clays, 9 to 40 percent slopes	0.000	0.167	0.082	0.000	0.002	0.169	0.005	0.000	0.000
Steele City	SD	Lyman	531.819	532.047	0.228	SD085	Lakoma-Okaton silty clays, 6 to 15 percent slopes	0.000	0.226	0.034	0.000	0.002	0.228	0.000	0.000	0.000
Steele City	SD	Lyman	532.047	532.284	0.238	SD085	Millboro-Boro silty clays, 6 to 9 percent slopes	0.000	0.238	0.124	0.000	0.000	0.238	0.000	0.000	0.000
Steele City	SD	Lyman	532.284	532.341	0.057	SD085	Millboro silty clay, 3 to 6 percent slopes	0.000	0.000	0.055	0.057	0.002	0.057	0.000	0.000	0.000
Steele City	SD	Lyman	532.341	532.466	0.125	SD085	Sansarc-Opal clays, 9 to 40 percent slopes	0.000	0.120	0.059	0.000	0.001	0.121	0.004	0.000	0.000
Steele City	SD	Lyman	532.466	532.599	0.133	SD085	Lakoma-Okaton silty clays, 6 to 15 percent slopes	0.000	0.131	0.020	0.000	0.001	0.133	0.000	0.000	0.000
Steele City	SD	Lyman	532.599	532.727	0.128	SD085	Millboro-Boro silty clays, 6 to 9 percent slopes	0.000	0.128	0.067	0.000	0.000	0.128	0.000	0.000	0.000
Steele City	SD	Lyman	532.727	532.886	0.159	SD085	Lakoma-Okaton silty clays, 6 to 15 percent slopes	0.000	0.158	0.024	0.000	0.002	0.159	0.000	0.000	0.000
Steele City	SD	Lyman	532.886	533.254	0.368	SD085	Millboro-Boro silty clays, 6 to 9 percent slopes	0.000	0.368	0.191	0.000	0.000	0.368	0.000	0.000	0.000
Steele City	SD	Lyman	533.254	533.629	0.375	SD085	Millboro silty clay, 3 to 6 percent slopes	0.000	0.000	0.364	0.375	0.011	0.375	0.000	0.000	0.000
Steele City	SD	Lyman	533.629	533.789	0.159	SD085	Lakoma-Okaton silty clays, 6 to 15 percent slopes	0.000	0.158	0.024	0.000	0.002	0.159	0.000	0.000	0.000
Steele City	SD	Lyman	533.789	533.874	0.085	SD085	Okaton-Lakoma silty clays, 15 to 40 percent slopes	0.000	0.085	0.004	0.000	0.000	0.081	0.004	0.000	0.004
Steele City	SD	Lyman	533.874	534.253	0.379	SD085	Millboro silty clay, 3 to 6 percent slopes	0.000	0.000	0.367	0.379	0.011	0.379	0.000	0.000	0.000
Steele City	SD	Lyman	534.253	534.567	0.315	SD085	Okaton-Lakoma silty clays, 15 to 40 percent slopes	0.000	0.315	0.016	0.000	0.000	0.299	0.016	0.000	0.016
Steele City	SD	Lyman	534.567	535.128	0.561	SD085	Sansarc-Opal clays, 9 to 40 percent slopes	0.000	0.539	0.264	0.000	0.006	0.544	0.017	0.000	0.000
Steele City	SD	Lyman	535.128	535.184	0.056	SD085	Bullcreek clay, 0 to 6 percent slopes	0.000	0.000	0.054	0.000	0.001	0.056	0.000	0.000	0.000
Steele City	SD	Lyman	535.184	535.265	0.081	SD085	Promise clay, 0 to 3 percent slopes	0.000	0.000	0.081	0.081	0.001	0.081	0.000	0.000	0.000
Steele City	SD	Lyman	535.265	535.330	0.065	SD085	Hilmoe silty clay	0.000	0.000	0.059	0.065	0.001	0.063	0.000	0.000	0.003
Steele City	SD	Lyman	535.330	535.361	0.031	SD085	Bigbend silt loam	0.002	0.000	0.002	0.031	0.000	0.028	0.000	0.000	0.003
Steele City	SD	Lyman	535.361	535.391	0.030	SD085	Munjor fine sandy loam	0.001	0.000	0.001	0.030	0.000	0.003	0.000	0.000	0.026
Steele City	SD	Lyman	535.391	535.434	0.043	SD085	Water	0.000	0.000	0.000	0.000	0.000	0.000	0.000	0.000	0.000
Steele City	SD	Tripp	535.434	535.487	0.053	SD123	Water	0.000	0.000	0.000	0.000	0.000	0.000	0.000	0.000	0.000
Steele City	SD	Tripp	535.487	535.676	0.188	SD123	Munjor fine sandy loam	0.000	0.000	0.000	0.188	0.002	0.009	0.000	0.000	0.179
Steele City	SD	Tripp	535.676	535.842	0.167	SD123	Bigbend soils	0.000	0.000	0.000	0.167	0.002	0.152	0.000	0.000	0.015
Steele City	SD	Tripp	535.842	535.865	0.022	SD123	Hilmoe clay, 0 to 2 percent slopes	0.000	0.000	0.021	0.022	0.000	0.022	0.000	0.000	0.000
Steele City	SD	Tripp	535.865	536.130	0.266	SD123	Opal-Sansarc clays, 9 to 25 percent slopes	0.000	0.239	0.027	0.000	0.003	0.266	0.000	0.000	0.000
Steele City	SD	Tripp	536.130	536.275	0.145	SD123	Sansarc-Opal association, 15 to 40 percent slopes	0.000	0.140	0.004	0.000	0.000	0.135	0.010	0.000	0.010
Steele City	SD	Tripp	536.275	536.300	0.025	SD123	Westover loam, 9 to 25 percent slopes	0.000	0.025	0.000	0.000	0.000	0.002	0.023	0.000	0.023
Steele City	SD	Tripp	536.300	536.441	0.141	SD123	Lowry silt loam, 0 to 4 percent slopes	0.000	0.000	0.001	0.141	0.003	0.014	0.000	0.000	0.000
Steele City	SD	Tripp	536.441	536.535	0.094	SD123	Westover loam, 9 to 25 percent slopes	0.000	0.093	0.001	0.000	0.001	0.008	0.088	0.000	0.088

Appendix K – Soils by Milepost – Steele City Segment

Pipeline Segment	State	County	Beginning Milepost	Ending Milepost	Miles	Soil Series	Soil Series Name	Wind (miles)	Water (miles)	Low revegetation on Potential (miles)	Prime Farmland (miles)	Hydric Soils (miles)	Compaction on Prone (miles)	Stoney – Rocky (miles)	Shallow Bedrock (miles)	Droghty (miles)
Steele City	SD	Tripp	536.535	536.692	0.157	SD123	Ree loam, 3 to 6 percent slopes	0.000	0.005	0.005	0.157	0.005	0.157	0.000	0.000	0.000
Steele City	SD	Tripp	536.692	536.727	0.035	SD123	Westover loam, 9 to 25 percent slopes	0.000	0.035	0.000	0.000	0.000	0.003	0.033	0.000	0.033
Steele City	SD	Tripp	536.727	536.769	0.042	SD123	Ree loam, 3 to 6 percent slopes	0.000	0.001	0.001	0.042	0.001	0.042	0.000	0.000	0.000
Steele City	SD	Tripp	536.769	536.945	0.176	SD123	Lowry silt loam, 0 to 4 percent slopes	0.000	0.000	0.002	0.176	0.004	0.018	0.000	0.000	0.000
Steele City	SD	Tripp	536.945	537.284	0.339	SD123	Ree loam, 3 to 6 percent slopes	0.000	0.010	0.010	0.339	0.010	0.339	0.000	0.000	0.000
Steele City	SD	Tripp	537.284	537.442	0.159	SD123	Westover loam, 9 to 25 percent slopes	0.000	0.157	0.002	0.000	0.002	0.014	0.149	0.000	0.149
Steele City	SD	Tripp	537.442	537.482	0.039	SD123	Okaton-Lakoma association, 15 to 40 percent slopes	0.000	0.039	0.002	0.000	0.000	0.038	0.001	0.000	0.001
Steele City	SD	Tripp	537.482	537.583	0.102	SD123	Sansarc-Opal association, 15 to 40 percent slopes	0.000	0.099	0.003	0.000	0.000	0.095	0.007	0.000	0.007
Steele City	SD	Tripp	537.583	537.700	0.117	SD123	Bullcreek clay	0.000	0.000	0.117	0.000	0.001	0.117	0.000	0.000	0.000
Steele City	SD	Tripp	537.700	538.506	0.806	SD123	Sansarc-Opal association, 15 to 40 percent slopes	0.000	0.782	0.024	0.000	0.000	0.749	0.056	0.000	0.056
Steele City	SD	Tripp	538.506	538.742	0.236	SD123	Okaton-Lakoma association, 15 to 40 percent slopes	0.000	0.234	0.009	0.000	0.002	0.232	0.005	0.000	0.005
Steele City	SD	Tripp	538.742	538.823	0.081	SD123	Schamber-Murdo complex, 15 to 40 percent slopes	0.000	0.081	0.000	0.000	0.000	0.044	0.073	0.000	0.073
Steele City	SD	Tripp	538.823	538.861	0.039	SD123	Westover loam, 9 to 25 percent slopes	0.000	0.038	0.000	0.000	0.000	0.003	0.036	0.000	0.036
Steele City	SD	Tripp	538.861	539.561	0.700	SD123	Ree loam, 0 to 3 percent slopes	0.000	0.000	0.021	0.700	0.049	0.700	0.000	0.000	0.000
Steele City	SD	Tripp	539.561	539.607	0.046	SD123	Westover loam, 9 to 25 percent slopes	0.000	0.045	0.000	0.000	0.000	0.004	0.043	0.000	0.043
Steele City	SD	Tripp	539.607	540.146	0.540	SD123	Okaton-Lakoma association, 15 to 40 percent slopes	0.000	0.534	0.022	0.000	0.005	0.529	0.011	0.000	0.011
Steele City	SD	Tripp	540.146	540.652	0.505	SD123	Sansarc-Opal association, 15 to 40 percent slopes	0.000	0.490	0.015	0.000	0.000	0.470	0.035	0.000	0.035
Steele City	SD	Tripp	540.652	540.704	0.052	SD123	Bullcreek clay	0.000	0.000	0.052	0.000	0.001	0.052	0.000	0.000	0.000
Steele City	SD	Tripp	540.704	540.850	0.146	SD123	Sansarc-Opal association, 15 to 40 percent slopes	0.000	0.142	0.004	0.000	0.000	0.136	0.010	0.000	0.010
Steele City	SD	Tripp	540.850	540.913	0.063	SD123	Bullcreek clay	0.000	0.000	0.063	0.000	0.001	0.063	0.000	0.000	0.000
Steele City	SD	Tripp	540.913	541.187	0.275	SD123	Sansarc-Opal association, 15 to 40 percent slopes	0.000	0.266	0.008	0.000	0.000	0.255	0.019	0.000	0.019
Steele City	SD	Tripp	541.187	541.486	0.299	SD123	Bullcreek clay	0.000	0.000	0.299	0.000	0.003	0.299	0.000	0.000	0.000
Steele City	SD	Tripp	541.486	541.576	0.090	SD123	Opal clay, 3 to 9 percent slopes	0.000	0.086	0.009	0.000	0.001	0.090	0.000	0.000	0.000
Steele City	SD	Tripp	541.576	541.713	0.137	SD123	Bullcreek clay	0.000	0.000	0.137	0.000	0.001	0.137	0.000	0.000	0.000
Steele City	SD	Tripp	541.713	541.976	0.264	SD123	Sansarc-Opal association, 15 to 40 percent slopes	0.000	0.256	0.008	0.000	0.000	0.245	0.018	0.000	0.018
Steele City	SD	Tripp	541.976	542.432	0.455	SD123	Okaton-Lakoma association, 15 to 40 percent slopes	0.000	0.451	0.018	0.000	0.005	0.446	0.009	0.000	0.009
Steele City	SD	Tripp	542.432	542.583	0.151	SD123	Ree loam, 6 to 9 percent slopes	0.000	0.136	0.005	0.151	0.006	0.151	0.005	0.000	0.005
Steele City	SD	Tripp	542.583	542.727	0.144	SD123	Okaton-Lakoma association, 15 to 40 percent slopes	0.000	0.142	0.006	0.000	0.001	0.141	0.003	0.000	0.003
Steele City	SD	Tripp	542.727	543.274	0.547	SD123	Lakoma-Okaton silty clays, 9 to 15 percent slopes	0.000	0.520	0.033	0.000	0.005	0.525	0.022	0.000	0.022
Steele City	SD	Tripp	543.274	543.379	0.105	SD123	Ree loam, 6 to 9 percent slopes	0.000	0.094	0.003	0.105	0.004	0.105	0.003	0.000	0.003
Steele City	SD	Tripp	543.379	543.439	0.060	SD123	Lakoma-Okaton silty clays, 9 to 15 percent slopes	0.000	0.057	0.004	0.000	0.001	0.058	0.002	0.000	0.002
Steele City	SD	Tripp	543.439	543.616	0.177	SD123	Okaton-Lakoma association, 15 to 40 percent slopes	0.000	0.175	0.007	0.000	0.002	0.173	0.004	0.000	0.004
Steele City	SD	Tripp	543.616	543.725	0.109	SD123	Lakoma-Okaton silty clays, 9 to 15 percent slopes	0.000	0.104	0.007	0.000	0.001	0.105	0.004	0.000	0.004
Steele City	SD	Tripp	543.725	544.525	0.799	SD123	Okaton-Lakoma association, 15 to 40 percent slopes	0.000	0.791	0.032	0.000	0.008	0.783	0.016	0.000	0.016
Steele City	SD	Tripp	544.525	544.565	0.040	SD123	Lakoma-Millboro silty clays, 5 to 9 percent slopes	0.000	0.036	0.016	0.000	0.001	0.040	0.000	0.000	0.000
Steele City	SD	Tripp	544.565	544.566	0.001	SD123	Okaton-Lakoma association, 15 to 40 percent slopes	0.000	0.001	0.000	0.000	0.000	0.001	0.000	0.000	0.000
Steele City	SD	Tripp	544.566	545.135	0.569	SD123	Lakoma-Millboro silty clays, 5 to 9 percent slopes	0.000	0.507	0.228	0.000	0.011	0.569	0.000	0.000	0.000
Steele City	SD	Tripp	545.135	545.327	0.192	SD123	Millboro silty clay, 3 to 6 percent slopes	0.000	0.000	0.178	0.192	0.002	0.190	0.002	0.000	0.002
Steele City	SD	Tripp	545.327	545.477	0.150	SD123	Mosher silt loam	0.000	0.000	0.138	0.000	0.002	0.150	0.000	0.000	0.000
Steele City	SD	Tripp	545.477	545.604	0.127	SD123	Millboro silty clay, 0 to 3 percent slopes	0.000	0.000	0.126	0.127	0.003	0.127	0.000	0.000	0.000
Steele City	SD	Tripp	545.604	545.720	0.116	SD123	Mosher silt loam	0.000	0.000	0.107	0.000	0.001	0.116	0.000	0.000	0.000
Steele City	SD	Tripp	545.720	545.958	0.239	SD123	Millboro silty clay, 0 to 3 percent slopes	0.000	0.000	0.236	0.239	0.005	0.239	0.000	0.000	0.000
Steele City	SD	Tripp	545.958	546.056	0.098	SD123	Millboro silty clay, 3 to 6 percent slopes	0.000	0.000	0.091	0.098	0.001	0.097	0.001	0.000	0.001
Steele City	SD	Tripp	546.056	546.162	0.107	SD123	Boro-Millboro silty clays, 5 to 9 percent slopes	0.000	0.093	0.045	0.107	0.002	0.107	0.000	0.000	0.000

Appendix K – Soils by Milepost – Steele City Segment

Pipeline Segment	State	County	Beginning Milepost	Ending Milepost	Miles	Soil Series	Soil Series Name	Wind (miles)	Water (miles)	Low revegetation on Potential (miles)	Prime Farmland (miles)	Hydric Soils (miles)	Compaction on Prone (miles)	Stoney – Rocky (miles)	Shallow Bedrock (miles)	Droghty (miles)
Steele City	SD	Tripp	546.162	546.695	0.533	SD123	Millboro silty clay, 3 to 6 percent slopes	0.000	0.000	0.495	0.533	0.005	0.527	0.005	0.000	0.005
Steele City	SD	Tripp	546.695	546.787	0.092	SD123	Witten silty clay	0.000	0.000	0.091	0.092	0.002	0.092	0.000	0.000	0.000
Steele City	SD	Tripp	546.787	546.916	0.129	SD123	Millboro silty clay, 3 to 6 percent slopes	0.000	0.000	0.120	0.129	0.001	0.128	0.001	0.000	0.001
Steele City	SD	Tripp	546.916	546.933	0.017	SD123	Boro-Millboro silty clays, 5 to 9 percent slopes	0.000	0.015	0.007	0.017	0.000	0.017	0.000	0.000	0.000
Steele City	SD	Tripp	546.933	546.936	0.003	SD123	Ree loam, 3 to 6 percent slopes	0.000	0.000	0.000	0.003	0.000	0.003	0.000	0.000	0.000
Steele City	SD	Tripp	546.936	547.114	0.178	SD123	Boro-Millboro silty clays, 5 to 9 percent slopes	0.000	0.155	0.075	0.178	0.004	0.178	0.000	0.000	0.000
Steele City	SD	Tripp	547.114	547.150	0.036	SD123	Ree loam, 3 to 6 percent slopes	0.000	0.001	0.001	0.036	0.001	0.036	0.000	0.000	0.000
Steele City	SD	Tripp	547.150	547.332	0.182	SD123	Reliance silty clay loam, 3 to 6 percent slopes	0.000	0.000	0.013	0.182	0.009	0.177	0.005	0.000	0.005
Steele City	SD	Tripp	547.332	547.915	0.583	SD123	Reliance silty clay loam, 6 to 9 percent slopes	0.000	0.548	0.029	0.583	0.006	0.578	0.006	0.000	0.006
Steele City	SD	Tripp	547.915	548.176	0.261	SD123	Reliance silty clay loam, 3 to 6 percent slopes	0.000	0.000	0.018	0.261	0.013	0.253	0.008	0.000	0.008
Steele City	SD	Tripp	548.176	548.324	0.148	SD123	Onita silt loam	0.000	0.000	0.003	0.148	0.001	0.148	0.000	0.000	0.000
Steele City	SD	Tripp	548.324	548.703	0.379	SD123	Reliance silty clay loam, 3 to 6 percent slopes	0.000	0.000	0.027	0.379	0.019	0.368	0.011	0.000	0.011
Steele City	SD	Tripp	548.703	548.805	0.102	SD123	Kolls clay	0.000	0.000	0.009	0.000	0.093	0.102	0.000	0.000	0.000
Steele City	SD	Tripp	548.805	549.368	0.563	SD123	Reliance silty clay loam, 3 to 6 percent slopes	0.000	0.000	0.039	0.563	0.028	0.546	0.017	0.000	0.017
Steele City	SD	Tripp	549.368	549.531	0.163	SD123	Millboro silty clay, 6 to 9 percent slopes	0.000	0.150	0.140	0.163	0.000	0.160	0.003	0.000	0.003
Steele City	SD	Tripp	549.531	549.592	0.062	SD123	Millboro silty clay, 3 to 6 percent slopes	0.000	0.000	0.057	0.062	0.001	0.061	0.001	0.000	0.001
Steele City	SD	Tripp	549.592	549.813	0.220	SD123	Carter silty clay loam	0.000	0.000	0.218	0.000	0.004	0.220	0.000	0.000	0.000
Steele City	SD	Tripp	549.813	549.871	0.058	SD123	Millboro silty clay, 0 to 3 percent slopes	0.000	0.000	0.058	0.058	0.001	0.058	0.000	0.000	0.000
Steele City	SD	Tripp	549.871	550.028	0.157	SD123	Carter silty clay loam	0.000	0.000	0.156	0.000	0.003	0.157	0.000	0.000	0.000
Steele City	SD	Tripp	550.028	550.118	0.090	SD123	Millboro silty clay, 3 to 6 percent slopes	0.000	0.000	0.084	0.090	0.001	0.089	0.001	0.000	0.001
Steele City	SD	Tripp	550.118	550.299	0.181	SD123	Millboro silty clay, 0 to 3 percent slopes	0.000	0.000	0.179	0.181	0.004	0.181	0.000	0.000	0.000
Steele City	SD	Tripp	550.299	550.478	0.180	SD123	Millboro silty clay, 3 to 6 percent slopes	0.000	0.000	0.167	0.180	0.002	0.178	0.002	0.000	0.002
Steele City	SD	Tripp	550.478	550.676	0.198	SD123	Millboro silty clay, 0 to 3 percent slopes	0.000	0.000	0.196	0.198	0.004	0.198	0.000	0.000	0.000
Steele City	SD	Tripp	550.676	550.920	0.245	SD123	Millboro silty clay, 3 to 6 percent slopes	0.000	0.000	0.227	0.245	0.002	0.242	0.002	0.000	0.002
Steele City	SD	Tripp	550.920	550.958	0.038	SD123	Witten silty clay	0.000	0.000	0.038	0.038	0.001	0.038	0.000	0.000	0.000
Steele City	SD	Tripp	550.958	551.089	0.131	SD123	Boro-Millboro silty clays, 5 to 9 percent slopes	0.000	0.114	0.055	0.131	0.003	0.131	0.000	0.000	0.000
Steele City	SD	Tripp	551.089	551.145	0.056	SD123	Millboro silty clay, 3 to 6 percent slopes	0.000	0.000	0.052	0.056	0.001	0.055	0.001	0.000	0.001
Steele City	SD	Tripp	551.145	551.545	0.399	SD123	Boro-Millboro silty clays, 5 to 9 percent slopes	0.000	0.347	0.168	0.399	0.008	0.399	0.000	0.000	0.000
Steele City	SD	Tripp	551.545	551.623	0.078	SD123	Carter silty clay loam	0.000	0.000	0.077	0.000	0.002	0.078	0.000	0.000	0.000
Steele City	SD	Tripp	551.623	552.885	1.262	SD123	Millboro silty clay, 3 to 6 percent slopes	0.000	0.000	1.174	1.262	0.013	1.250	0.013	0.000	0.013
Steele City	SD	Tripp	552.885	553.104	0.219	SD123	Lakoma-Millboro silty clays, 5 to 9 percent slopes	0.000	0.195	0.088	0.000	0.004	0.219	0.000	0.000	0.000
Steele City	SD	Tripp	553.104	553.165	0.061	SD123	Millboro silty clay, 3 to 6 percent slopes	0.000	0.000	0.057	0.061	0.001	0.061	0.001	0.000	0.001
Steele City	SD	Tripp	553.165	553.316	0.151	SD123	Lakoma-Millboro silty clays, 5 to 9 percent slopes	0.000	0.134	0.060	0.000	0.003	0.151	0.000	0.000	0.000
Steele City	SD	Tripp	553.316	553.450	0.135	SD123	Canning-Murdo loams, 6 to 15 percent slopes	0.000	0.117	0.000	0.000	0.000	0.126	0.116	0.000	0.116
Steele City	SD	Tripp	553.450	553.540	0.090	SD123	Lakoma-Millboro silty clays, 5 to 9 percent slopes	0.000	0.080	0.036	0.000	0.002	0.090	0.000	0.000	0.000
Steele City	SD	Tripp	553.540	553.558	0.018	SD123	Canning-Murdo loams, 6 to 15 percent slopes	0.000	0.016	0.000	0.000	0.000	0.017	0.015	0.000	0.015
Steele City	SD	Tripp	553.558	553.707	0.149	SD123	Lakoma-Millboro silty clays, 5 to 9 percent slopes	0.000	0.133	0.060	0.000	0.003	0.149	0.000	0.000	0.000
Steele City	SD	Tripp	553.707	553.837	0.130	SD123	Millboro silty clay, 3 to 6 percent slopes	0.000	0.000	0.121	0.130	0.001	0.129	0.001	0.000	0.001
Steele City	SD	Tripp	553.837	554.003	0.166	SD123	Witten silty clay	0.000	0.000	0.165	0.166	0.003	0.166	0.000	0.000	0.000
Steele City	SD	Tripp	554.003	554.828	0.825	SD123	Millboro silty clay, 3 to 6 percent slopes	0.000	0.000	0.767	0.825	0.008	0.816	0.008	0.000	0.008
Steele City	SD	Tripp	554.828	555.176	0.348	SD123	Witten silty clay	0.000	0.000	0.345	0.348	0.007	0.348	0.000	0.000	0.000
Steele City	SD	Tripp	555.176	555.502	0.326	SD123	Millboro silty clay, 0 to 3 percent slopes	0.000	0.000	0.323	0.326	0.007	0.326	0.000	0.000	0.000
Steele City	SD	Tripp	555.502	555.550	0.048	SD123	Witten silty clay	0.000	0.000	0.048	0.048	0.001	0.048	0.000	0.000	0.000
Steele City	SD	Tripp	555.550	555.658	0.109	SD123	Erd clay	0.000	0.000	0.109	0.000	0.001	0.109	0.000	0.000	0.000

Appendix K – Soils by Milepost – Steele City Segment

Pipeline Segment	State	County	Beginning Milepost	Ending Milepost	Miles	Soil Series	Soil Series Name	Wind (miles)	Water (miles)	Low revegetation on Potential (miles)	Prime Farmland (miles)	Hydric Soils (miles)	Compaction on Prone (miles)	Stoney – Rocky (miles)	Shallow Bedrock (miles)	Droghty (miles)
Steele City	SD	Tripp	555.658	555.865	0.206	SD123	Erd-Capa complex	0.000	0.000	0.204	0.000	0.004	0.204	0.000	0.000	0.000
Steele City	SD	Tripp	555.865	556.178	0.314	SD123	Millboro silty clay, 3 to 6 percent slopes	0.000	0.000	0.292	0.314	0.003	0.311	0.003	0.000	0.003
Steele City	SD	Tripp	556.178	556.237	0.059	SD123	Carter silty clay loam	0.000	0.000	0.058	0.000	0.001	0.059	0.000	0.000	0.000
Steele City	SD	Tripp	556.237	556.391	0.154	SD123	Millboro silty clay, 3 to 6 percent slopes	0.000	0.000	0.143	0.154	0.002	0.153	0.002	0.000	0.002
Steele City	SD	Tripp	556.391	556.519	0.128	SD123	Lakoma-Millboro silty clays, 5 to 9 percent slopes	0.000	0.114	0.051	0.000	0.003	0.128	0.000	0.000	0.000
Steele City	SD	Tripp	556.519	556.819	0.300	SD123	Millboro silty clay, 0 to 3 percent slopes	0.000	0.000	0.297	0.300	0.006	0.300	0.000	0.000	0.000
Steele City	SD	Tripp	556.819	556.885	0.066	SD123	Millboro silty clay, 3 to 6 percent slopes	0.000	0.000	0.062	0.066	0.001	0.066	0.001	0.000	0.001
Steele City	SD	Tripp	556.885	556.978	0.093	SD123	Witten silty clay	0.000	0.000	0.092	0.093	0.002	0.093	0.000	0.000	0.000
Steele City	SD	Tripp	556.978	557.167	0.189	SD123	Millboro silty clay, 0 to 3 percent slopes	0.000	0.000	0.187	0.189	0.004	0.189	0.000	0.000	0.000
Steele City	SD	Tripp	557.167	557.235	0.068	SD123	Witten silty clay	0.000	0.000	0.067	0.068	0.001	0.068	0.000	0.000	0.000
Steele City	SD	Tripp	557.235	557.596	0.361	SD123	Millboro silty clay, 0 to 3 percent slopes	0.000	0.000	0.357	0.361	0.007	0.361	0.000	0.000	0.000
Steele City	SD	Tripp	557.596	557.737	0.141	SD123	Witten silty clay	0.000	0.000	0.139	0.141	0.003	0.141	0.000	0.000	0.000
Steele City	SD	Tripp	557.737	558.102	0.365	SD123	Millboro silty clay, 0 to 3 percent slopes	0.000	0.000	0.362	0.365	0.007	0.365	0.000	0.000	0.000
Steele City	SD	Tripp	558.102	558.160	0.058	SD123	Erd clay	0.000	0.000	0.058	0.000	0.001	0.058	0.000	0.000	0.000
Steele City	SD	Tripp	558.160	558.637	0.477	SD123	Millboro silty clay, 0 to 3 percent slopes	0.000	0.000	0.472	0.477	0.010	0.477	0.000	0.000	0.000
Steele City	SD	Tripp	558.637	558.874	0.237	SD123	Erd-Capa complex	0.000	0.000	0.235	0.000	0.005	0.235	0.000	0.000	0.000
Steele City	SD	Tripp	558.874	559.422	0.548	SD123	Millboro silty clay, 0 to 3 percent slopes	0.000	0.000	0.543	0.548	0.011	0.548	0.000	0.000	0.000
Steele City	SD	Tripp	559.422	559.508	0.086	SD123	Millboro silty clay, 3 to 6 percent slopes	0.000	0.000	0.080	0.086	0.001	0.085	0.001	0.000	0.001
Steele City	SD	Tripp	559.508	559.701	0.193	SD123	Millboro silty clay, 6 to 9 percent slopes	0.000	0.178	0.166	0.193	0.000	0.189	0.004	0.000	0.004
Steele City	SD	Tripp	559.701	559.913	0.211	SD123	Lakoma-Okaton silty clays, 9 to 15 percent slopes	0.000	0.201	0.013	0.000	0.002	0.203	0.008	0.000	0.008
Steele City	SD	Tripp	559.913	560.117	0.205	SD123	Lakoma-Millboro silty clays, 5 to 9 percent slopes	0.000	0.182	0.082	0.000	0.004	0.205	0.000	0.000	0.000
Steele City	SD	Tripp	560.117	560.459	0.342	SD123	Millboro silty clay, 6 to 9 percent slopes	0.000	0.314	0.294	0.342	0.000	0.335	0.007	0.000	0.007
Steele City	SD	Tripp	560.459	560.530	0.071	SD123	Lakoma-Millboro silty clays, 5 to 9 percent slopes	0.000	0.063	0.028	0.000	0.001	0.071	0.000	0.000	0.000
Steele City	SD	Tripp	560.530	560.992	0.463	SD123	Millboro silty clay, 6 to 9 percent slopes	0.000	0.426	0.398	0.463	0.000	0.453	0.009	0.000	0.009
Steele City	SD	Tripp	560.992	561.113	0.121	SD123	Witten silty clay	0.000	0.000	0.119	0.121	0.002	0.121	0.000	0.000	0.000
Steele City	SD	Tripp	561.113	561.322	0.209	SD123	Millboro silty clay, 3 to 6 percent slopes	0.000	0.000	0.194	0.209	0.002	0.207	0.002	0.000	0.002
Steele City	SD	Tripp	561.322	561.510	0.188	SD123	Millboro silty clay, 0 to 3 percent slopes	0.000	0.000	0.187	0.188	0.004	0.188	0.000	0.000	0.000
Steele City	SD	Tripp	561.510	561.594	0.084	SD123	Witten silty clay	0.000	0.000	0.083	0.084	0.002	0.084	0.000	0.000	0.000
Steele City	SD	Tripp	561.594	561.749	0.155	SD123	Millboro silty clay, 0 to 3 percent slopes	0.000	0.000	0.153	0.155	0.003	0.155	0.000	0.000	0.000
Steele City	SD	Tripp	561.749	561.972	0.223	SD123	Lakoma-Millboro silty clays, 5 to 9 percent slopes	0.000	0.198	0.089	0.000	0.004	0.223	0.000	0.000	0.000
Steele City	SD	Tripp	561.972	562.026	0.054	SD123	Water	0.000	0.000	0.000	0.000	0.000	0.000	0.000	0.000	0.000
Steele City	SD	Tripp	562.026	562.138	0.112	SD123	Lakoma-Millboro silty clays, 5 to 9 percent slopes	0.000	0.100	0.045	0.000	0.002	0.112	0.000	0.000	0.000
Steele City	SD	Tripp	562.138	562.267	0.129	SD123	Lakoma-Okaton silty clays, 9 to 15 percent slopes	0.000	0.123	0.008	0.000	0.001	0.124	0.005	0.000	0.005
Steele City	SD	Tripp	562.267	562.368	0.101	SD123	Canning-Murdo loams, 6 to 15 percent slopes	0.000	0.088	0.000	0.000	0.000	0.095	0.087	0.000	0.087
Steele City	SD	Tripp	562.368	562.443	0.075	SD123	Canning loam, 2 to 5 percent slopes	0.000	0.000	0.000	0.075	0.001	0.074	0.067	0.000	0.067
Steele City	SD	Tripp	562.443	562.451	0.008	SD123	Canning-Murdo loams, 6 to 15 percent slopes	0.000	0.007	0.000	0.000	0.000	0.008	0.007	0.000	0.007
Steele City	SD	Tripp	562.451	562.472	0.021	SD123	Canning loam, 2 to 5 percent slopes	0.000	0.000	0.000	0.021	0.000	0.021	0.019	0.000	0.019
Steele City	SD	Tripp	562.472	562.542	0.070	SD123	Canning-Murdo loams, 6 to 15 percent slopes	0.000	0.061	0.000	0.000	0.000	0.066	0.060	0.000	0.060
Steele City	SD	Tripp	562.542	562.716	0.174	SD123	Lakoma-Okaton silty clays, 9 to 15 percent slopes	0.000	0.165	0.010	0.000	0.002	0.167	0.007	0.000	0.007
Steele City	SD	Tripp	562.716	562.755	0.039	SD123	Water	0.000	0.000	0.000	0.000	0.000	0.000	0.000	0.000	0.000
Steele City	SD	Tripp	562.755	562.758	0.003	SD123	Millboro silty clay, 0 to 3 percent slopes	0.000	0.000	0.003	0.003	0.000	0.003	0.000	0.000	0.000
Steele City	SD	Tripp	562.758	562.943	0.186	SD123	Lakoma-Millboro silty clays, 5 to 9 percent slopes	0.000	0.165	0.074	0.000	0.004	0.186	0.000	0.000	0.000
Steele City	SD	Tripp	562.943	562.985	0.042	SD123	Millboro silty clay, 0 to 3 percent slopes	0.000	0.000	0.042	0.042	0.001	0.042	0.000	0.000	0.000
Steele City	SD	Tripp	562.985	563.023	0.038	SD123	Lakoma-Millboro silty clays, 5 to 9 percent slopes	0.000	0.034	0.015	0.000	0.001	0.038	0.000	0.000	0.000

Appendix K – Soils by Milepost – Steele City Segment

Pipeline Segment	State	County	Beginning Milepost	Ending Milepost	Miles	Soil Series	Soil Series Name	Wind (miles)	Water (miles)	Low revegetation on Potential (miles)	Prime Farmland (miles)	Hydric Soils (miles)	Compaction on Prone (miles)	Stoney – Rocky (miles)	Shallow Bedrock (miles)	Droghty (miles)
Steele City	SD	Tripp	563.023	563.057	0.034	SD123	Lakoma-Okaton silty clays, 9 to 15 percent slopes	0.000	0.032	0.002	0.000	0.000	0.033	0.001	0.000	0.001
Steele City	SD	Tripp	563.057	563.158	0.101	SD123	Canning-Murdo loams, 6 to 15 percent slopes	0.000	0.088	0.000	0.000	0.000	0.095	0.087	0.000	0.087
Steele City	SD	Tripp	563.158	563.288	0.130	SD123	Lakoma-Okaton silty clays, 9 to 15 percent slopes	0.000	0.124	0.008	0.000	0.001	0.125	0.005	0.000	0.005
Steele City	SD	Tripp	563.288	563.346	0.058	SD123	Lakoma-Millboro silty clays, 5 to 9 percent slopes	0.000	0.052	0.023	0.000	0.001	0.058	0.000	0.000	0.000
Steele City	SD	Tripp	563.346	563.541	0.194	SD123	Millboro silty clay, 3 to 6 percent slopes	0.000	0.000	0.181	0.194	0.002	0.192	0.002	0.000	0.002
Steele City	SD	Tripp	563.541	563.781	0.241	SD123	Lakoma-Millboro silty clays, 5 to 9 percent slopes	0.000	0.214	0.096	0.000	0.005	0.241	0.000	0.000	0.000
Steele City	SD	Tripp	563.781	563.877	0.096	SD123	Millboro silty clay, 3 to 6 percent slopes	0.000	0.000	0.089	0.096	0.001	0.095	0.001	0.000	0.001
Steele City	SD	Tripp	563.877	563.935	0.058	SD123	Millboro silty clay, 0 to 3 percent slopes	0.000	0.000	0.057	0.058	0.001	0.058	0.000	0.000	0.000
Steele City	SD	Tripp	563.935	564.036	0.101	SD123	Millboro silty clay, 3 to 6 percent slopes	0.000	0.000	0.094	0.101	0.001	0.100	0.001	0.000	0.001
Steele City	SD	Tripp	564.036	564.106	0.070	SD123	Lakoma-Millboro silty clays, 5 to 9 percent slopes	0.000	0.062	0.028	0.000	0.001	0.070	0.000	0.000	0.000
Steele City	SD	Tripp	564.106	564.204	0.098	SD123	Inavale complex, channeled	0.080	0.000	0.000	0.000	0.001	0.008	0.000	0.000	0.080
Steele City	SD	Tripp	564.204	564.566	0.362	SD123	Bridgeport complex	0.000	0.000	0.101	0.362	0.000	0.355	0.000	0.000	0.007
Steele City	SD	Tripp	564.566	564.591	0.025	SD123	Anselmo-Vetal fine sandy loams, 0 to 3 percent slopes	0.000	0.000	0.001	0.025	0.001	0.001	0.000	0.000	0.016
Steele City	SD	Tripp	564.591	564.727	0.136	SD123	Bridgeport complex	0.000	0.000	0.038	0.136	0.000	0.134	0.000	0.000	0.003
Steele City	SD	Tripp	564.727	565.016	0.289	SD123	Anselmo-Vetal fine sandy loams, 0 to 3 percent slopes	0.000	0.000	0.006	0.289	0.009	0.006	0.000	0.000	0.188
Steele City	SD	Tripp	565.016	565.142	0.126	SD123	Bridgeport complex	0.000	0.000	0.035	0.126	0.000	0.123	0.000	0.000	0.003
Steele City	SD	Tripp	565.142	565.447	0.305	SD123	Witten silty clay	0.000	0.000	0.302	0.305	0.006	0.305	0.000	0.000	0.000
Steele City	SD	Tripp	565.447	565.654	0.206	SD123	Millboro silty clay, 0 to 3 percent slopes	0.000	0.000	0.204	0.206	0.004	0.206	0.000	0.000	0.000
Steele City	SD	Tripp	565.654	565.738	0.084	SD123	Witten silty clay	0.000	0.000	0.083	0.084	0.002	0.084	0.000	0.000	0.000
Steele City	SD	Tripp	565.738	565.901	0.163	SD123	Millboro silty clay, 0 to 3 percent slopes	0.000	0.000	0.161	0.163	0.003	0.163	0.000	0.000	0.000
Steele City	SD	Tripp	565.901	566.172	0.271	SD123	Millboro silty clay, 3 to 6 percent slopes	0.000	0.000	0.252	0.271	0.003	0.269	0.003	0.000	0.003
Steele City	SD	Tripp	566.172	566.329	0.157	SD123	Millboro silty clay, 0 to 3 percent slopes	0.000	0.000	0.156	0.157	0.003	0.157	0.000	0.000	0.000
Steele City	SD	Tripp	566.329	566.342	0.013	SD123	Millboro silty clay, 3 to 6 percent slopes	0.000	0.000	0.012	0.013	0.000	0.013	0.000	0.000	0.000
Steele City	SD	Tripp	566.342	566.413	0.071	SD123	Lakoma-Millboro silty clays, 5 to 9 percent slopes	0.000	0.063	0.028	0.000	0.001	0.071	0.000	0.000	0.000
Steele City	SD	Tripp	566.413	567.102	0.689	SD123	Lakoma-Okaton silty clays, 9 to 15 percent slopes	0.000	0.655	0.041	0.000	0.007	0.662	0.028	0.000	0.028
Steele City	SD	Tripp	567.102	567.376	0.274	SD123	Ree loam, 6 to 9 percent slopes	0.000	0.247	0.008	0.274	0.011	0.274	0.008	0.000	0.008
Steele City	SD	Tripp	567.376	567.396	0.020	SD123	Millboro silty clay, 6 to 9 percent slopes	0.000	0.018	0.017	0.020	0.000	0.019	0.000	0.000	0.000
Steele City	SD	Tripp	567.396	567.761	0.365	SD123	Ree loam, 6 to 9 percent slopes	0.000	0.329	0.011	0.365	0.015	0.365	0.011	0.000	0.011
Steele City	SD	Tripp	567.761	567.843	0.082	SD123	Lakoma-Millboro silty clays, 5 to 9 percent slopes	0.000	0.073	0.033	0.000	0.002	0.082	0.000	0.000	0.000
Steele City	SD	Tripp	567.843	568.028	0.185	SD123	Ree loam, 6 to 9 percent slopes	0.000	0.166	0.006	0.185	0.007	0.185	0.006	0.000	0.006
Steele City	SD	Tripp	568.028	568.129	0.101	SD123	Ree loam, 9 to 15 percent slopes	0.000	0.098	0.000	0.000	0.001	0.092	0.009	0.000	0.007
Steele City	SD	Tripp	568.129	568.284	0.154	SD123	Ree loam, 6 to 9 percent slopes	0.000	0.139	0.005	0.154	0.006	0.154	0.005	0.000	0.005
Steele City	SD	Tripp	568.284	568.426	0.143	SD123	Promise clay, 6 to 9 percent slopes	0.000	0.135	0.135	0.000	0.001	0.143	0.000	0.000	0.000
Steele City	SD	Tripp	568.426	568.499	0.073	SD123	Millboro silty clay, 6 to 9 percent slopes	0.000	0.067	0.063	0.073	0.000	0.071	0.001	0.000	0.001
Steele City	SD	Tripp	568.499	568.583	0.084	SD123	Anselmo-Longpine fine sandy loams, 10 to 20 percent slopes	0.008	0.067	0.000	0.000	0.000	0.000	0.020	0.003	0.071
Steele City	SD	Tripp	568.583	569.001	0.418	SD123	Ree loam, 6 to 9 percent slopes	0.000	0.376	0.013	0.418	0.017	0.418	0.013	0.000	0.013
Steele City	SD	Tripp	569.001	569.124	0.123	SD123	Manter fine sandy loam, 3 to 9 percent slopes	0.004	0.000	0.000	0.123	0.001	0.001	0.001	0.000	0.115
Steele City	SD	Tripp	569.124	569.215	0.092	SD123	Manter fine sandy loam, 0 to 3 percent slopes	0.000	0.000	0.000	0.092	0.002	0.001	0.005	0.000	0.087
Steele City	SD	Tripp	569.215	569.365	0.150	SD123	Manter fine sandy loam, 3 to 9 percent slopes	0.005	0.000	0.000	0.150	0.002	0.002	0.002	0.000	0.141
Steele City	SD	Tripp	569.365	569.576	0.211	SD123	Anselmo fine sandy loam, 3 to 6 percent slopes	0.006	0.000	0.000	0.211	0.002	0.000	0.000	0.000	0.206
Steele City	SD	Tripp	569.576	569.679	0.104	SD123	Anselmo-Vetal fine sandy loams, 0 to 3 percent slopes	0.000	0.000	0.002	0.104	0.003	0.002	0.000	0.000	0.067

Appendix K – Soils by Milepost – Steele City Segment

Pipeline Segment	State	County	Beginning Milepost	Ending Milepost	Miles	Soil Series	Soil Series Name	Wind (miles)	Water (miles)	Low revegetation on Potential (miles)	Prime Farmland (miles)	Hydric Soils (miles)	Compaction on Prone (miles)	Stoney – Rocky (miles)	Shallow Bedrock (miles)	Droghty (miles)
Steele City	SD	Tripp	569.679	569.808	0.129	SD123	Doger loamy fine sand, 0 to 6 percent slopes	0.118	0.000	0.001	0.000	0.000	0.001	0.001	0.001	0.122
Steele City	SD	Tripp	569.808	569.811	0.003	SD123	Dunday-Doger loamy fine sands, 3 to 9 percent slopes	0.003	0.000	0.000	0.000	0.000	0.000	0.000	0.000	0.003
Steele City	SD	Tripp	569.811	569.873	0.062	SD123	Doger loamy fine sand, 0 to 6 percent slopes	0.057	0.000	0.001	0.000	0.000	0.001	0.001	0.001	0.058
Steele City	SD	Tripp	569.873	569.922	0.049	SD123	Dunday-Doger loamy fine sands, 3 to 9 percent slopes	0.047	0.000	0.000	0.000	0.000	0.000	0.000	0.000	0.047
Steele City	SD	Tripp	569.922	570.091	0.170	SD123	Anselmo loamy fine sand, 0 to 9 percent slopes, eroded	0.153	0.000	0.000	0.000	0.002	0.170	0.000	0.000	0.153
Steele City	SD	Tripp	570.091	570.664	0.573	SD123	Valentine-Dunday complex, 3 to 9 percent slopes	0.544	0.000	0.000	0.000	0.006	0.573	0.023	0.006	0.561
Steele City	SD	Tripp	570.664	570.724	0.060	SD123	Doger-Elsmere complex, 0 to 3 percent slopes	0.032	0.000	0.001	0.000	0.002	0.060	0.000	0.000	0.033
Steele City	SD	Tripp	570.724	570.837	0.113	SD123	Valentine-Dunday complex, 3 to 9 percent slopes	0.107	0.000	0.000	0.000	0.001	0.113	0.005	0.001	0.111
Steele City	SD	Tripp	570.837	571.024	0.187	SD123	Doger-Elsmere complex, 0 to 3 percent slopes	0.099	0.000	0.004	0.000	0.006	0.187	0.000	0.000	0.103
Steele City	SD	Tripp	571.024	571.140	0.116	SD123	Lakoma-Millboro silty clays, 5 to 9 percent slopes	0.000	0.103	0.046	0.000	0.002	0.116	0.000	0.000	0.000
Steele City	SD	Tripp	571.140	571.566	0.426	SD123	Wewela fine sandy loam, 3 to 6 percent slopes	0.000	0.000	0.004	0.000	0.004	0.426	0.004	0.000	0.021
Steele City	SD	Tripp	571.566	571.721	0.155	SD123	Dunday loamy fine sand, 3 to 9 percent slopes, eroded	0.151	0.000	0.000	0.000	0.002	0.155	0.002	0.002	0.151
Steele City	SD	Tripp	571.721	572.266	0.545	SD123	Doger-Elsmere complex, 0 to 3 percent slopes	0.289	0.000	0.011	0.000	0.016	0.545	0.000	0.000	0.300
Steele City	SD	Tripp	572.266	572.508	0.242	SD123	Dunday loamy fine sand, 3 to 9 percent slopes, eroded	0.235	0.000	0.000	0.000	0.002	0.242	0.002	0.002	0.235
Steele City	SD	Tripp	572.508	572.555	0.047	SD123	Elsmere fine sandy loam	0.002	0.000	0.002	0.047	0.002	0.047	0.000	0.000	0.005
Steele City	SD	Tripp	572.555	572.643	0.089	SD123	Dunday loamy fine sand, 3 to 9 percent slopes, eroded	0.086	0.000	0.000	0.000	0.001	0.089	0.001	0.001	0.086
Steele City	SD	Tripp	572.643	572.734	0.091	SD123	Elsmere fine sandy loam	0.005	0.000	0.005	0.091	0.005	0.091	0.000	0.000	0.009
Steele City	SD	Tripp	572.734	572.909	0.175	SD123	Valentine-Dunday complex, 3 to 9 percent slopes	0.166	0.000	0.000	0.000	0.002	0.175	0.007	0.002	0.171
Steele City	SD	Tripp	572.909	573.072	0.163	SD123	Dunday loamy fine sand, 3 to 9 percent slopes, eroded	0.158	0.000	0.000	0.000	0.002	0.163	0.002	0.002	0.158
Steele City	SD	Tripp	573.072	573.136	0.064	SD123	Valentine-Longpine complex, 6 to 15 percent slopes	0.050	0.000	0.000	0.000	0.000	0.064	0.014	0.001	0.063
Steele City	SD	Tripp	573.136	573.176	0.040	SD123	Dunday loamy fine sand, 3 to 9 percent slopes, eroded	0.039	0.000	0.000	0.000	0.000	0.040	0.000	0.000	0.039
Steele City	SD	Tripp	573.176	573.300	0.124	SD123	Doger-Elsmere complex, 0 to 3 percent slopes	0.066	0.000	0.002	0.000	0.004	0.124	0.000	0.000	0.068
Steele City	SD	Tripp	573.300	573.420	0.120	SD123	Dunday loamy fine sand, 3 to 9 percent slopes, eroded	0.117	0.000	0.000	0.000	0.001	0.120	0.001	0.001	0.117
Steele City	SD	Tripp	573.420	573.703	0.282	SD123	Valentine-Longpine complex, 6 to 15 percent slopes	0.220	0.000	0.000	0.000	0.000	0.282	0.062	0.006	0.277
Steele City	SD	Tripp	573.703	573.886	0.183	SD123	Valentine-Dunday complex, 3 to 9 percent slopes	0.174	0.000	0.000	0.000	0.002	0.183	0.007	0.002	0.179
Steele City	SD	Tripp	573.886	574.170	0.285	SD123	Dunday loamy fine sand, 3 to 9 percent slopes, eroded	0.276	0.000	0.000	0.000	0.003	0.285	0.003	0.003	0.276
Steele City	SD	Tripp	574.170	574.244	0.073	SD123	Ronson-Longpine fine sandy loams, 0 to 6 percent slopes	0.004	0.000	0.001	0.000	0.001	0.073	0.026	0.000	0.035
Steele City	SD	Tripp	574.244	574.440	0.196	SD123	Valentine-Longpine complex, 6 to 15 percent slopes	0.153	0.000	0.000	0.000	0.000	0.196	0.043	0.004	0.192
Steele City	SD	Tripp	574.440	574.487	0.047	SD123	Doger loamy fine sand, 0 to 6 percent slopes	0.043	0.000	0.000	0.000	0.000	0.047	0.000	0.000	0.044
Steele City	SD	Tripp	574.487	574.652	0.166	SD123	Dunday loamy fine sand, 3 to 9 percent slopes, eroded	0.161	0.000	0.000	0.000	0.002	0.166	0.002	0.002	0.161
Steele City	SD	Tripp	574.652	574.865	0.213	SD123	Doger-Elsmere complex, 0 to 3 percent slopes	0.113	0.000	0.004	0.000	0.006	0.213	0.000	0.000	0.117
Steele City	SD	Tripp	574.865	574.903	0.038	SD123	Elsmere fine sandy loam	0.002	0.000	0.002	0.038	0.002	0.038	0.000	0.000	0.004
Steele City	SD	Tripp	574.903	575.001	0.098	SD123	Doger-Elsmere complex, 0 to 3 percent slopes	0.052	0.000	0.002	0.000	0.003	0.098	0.000	0.000	0.054

Appendix K – Soils by Milepost – Steele City Segment

Pipeline Segment	State	County	Beginning Milepost	Ending Milepost	Miles	Soil Series	Soil Series Name	Wind (miles)	Water (miles)	Low revegetation on Potential (miles)	Prime Farmland (miles)	Hydric Soils (miles)	Compaction on Prone (miles)	Stoney – Rocky (miles)	Shallow Bedrock (miles)	Droghty (miles)
Steele City	SD	Tripp	575.001	575.078	0.077	SD123	Elsmere fine sandy loam	0.004	0.000	0.004	0.077	0.004	0.077	0.000	0.000	0.008
Steele City	SD	Tripp	575.078	575.236	0.159	SD123	Doger-Elsmere complex, 0 to 3 percent slopes	0.084	0.000	0.003	0.000	0.005	0.159	0.000	0.000	0.087
Steele City	SD	Tripp	575.236	575.340	0.104	SD123	Dunday loamy fine sand, 3 to 9 percent slopes, eroded	0.101	0.000	0.000	0.000	0.001	0.104	0.001	0.001	0.101
Steele City	SD	Tripp	575.340	575.475	0.135	SD123	Ronson fine sandy loam, 0 to 4 percent slopes	0.004	0.000	0.004	0.000	0.000	0.135	0.004	0.000	0.012
Steele City	SD	Tripp	575.475	575.653	0.178	SD123	Anselmo-Holt fine sandy loams, 3 to 9 percent slopes	0.000	0.000	0.000	0.178	0.002	0.178	0.009	0.000	0.169
Steele City	SD	Tripp	575.653	575.745	0.093	SD123	Doger loamy fine sand, 0 to 6 percent slopes	0.085	0.000	0.001	0.000	0.000	0.093	0.001	0.001	0.088
Steele City	SD	Tripp	575.745	575.834	0.089	SD123	Anselmo fine sandy loam, 3 to 6 percent slopes	0.003	0.000	0.000	0.089	0.001	0.089	0.000	0.000	0.087
Steele City	SD	Tripp	575.834	576.051	0.217	SD123	Elsmere fine sandy loam	0.011	0.000	0.011	0.217	0.011	0.217	0.000	0.000	0.022
Steele City	SD	Tripp	576.051	576.092	0.041	SD123	Doger loamy fine sand, 0 to 6 percent slopes	0.038	0.000	0.000	0.000	0.000	0.041	0.000	0.000	0.039
Steele City	SD	Tripp	576.092	576.332	0.240	SD123	Anselmo-Holt fine sandy loams, 3 to 9 percent slopes	0.000	0.000	0.000	0.240	0.002	0.240	0.012	0.000	0.228
Steele City	SD	Tripp	576.332	576.375	0.043	SD123	Vetal fine sandy loam	0.002	0.000	0.002	0.043	0.000	0.043	0.000	0.000	0.006
Steele City	SD	Tripp	576.375	576.503	0.128	SD123	Doger loamy fine sand, 0 to 6 percent slopes	0.117	0.000	0.001	0.000	0.000	0.128	0.001	0.001	0.121
Steele City	SD	Tripp	576.503	576.572	0.070	SD123	Dunday loamy fine sand, 3 to 9 percent slopes, eroded	0.068	0.000	0.000	0.000	0.001	0.070	0.001	0.001	0.068
Steele City	SD	Tripp	576.572	576.825	0.253	SD123	Anselmo-Holt fine sandy loams, 3 to 9 percent slopes	0.000	0.000	0.000	0.253	0.003	0.253	0.013	0.000	0.240
Steele City	SD	Tripp	576.825	576.875	0.050	SD123	Holt-Anselmo fine sandy loams, 0 to 3 percent slopes	0.000	0.000	0.000	0.000	0.001	0.050	0.002	0.000	0.047
Steele City	SD	Tripp	576.875	577.250	0.375	SD123	Dunday loamy fine sand, 3 to 9 percent slopes, eroded	0.363	0.000	0.000	0.000	0.004	0.375	0.004	0.004	0.363
Steele City	SD	Tripp	577.250	577.343	0.093	SD123	Whitelake fine sandy loam	0.003	0.000	0.084	0.000	0.001	0.093	0.000	0.000	0.089
Steele City	SD	Tripp	577.343	577.465	0.122	SD123	Doger loamy fine sand, 0 to 6 percent slopes	0.113	0.000	0.001	0.000	0.000	0.122	0.001	0.001	0.116
Steele City	SD	Tripp	577.465	577.648	0.183	SD123	Whitelake fine sandy loam	0.005	0.000	0.166	0.000	0.002	0.183	0.000	0.000	0.175
Steele City	SD	Tripp	577.648	577.793	0.146	SD123	Doger loamy fine sand, 0 to 6 percent slopes	0.134	0.000	0.001	0.000	0.000	0.146	0.001	0.001	0.138
Steele City	SD	Tripp	577.793	577.862	0.069	SD123	Whitelake-Lute fine sandy loams	0.006	0.000	0.055	0.000	0.001	0.069	0.000	0.000	0.048
Steele City	SD	Tripp	577.862	578.234	0.372	SD123	Holt-Anselmo fine sandy loams, 0 to 3 percent slopes	0.000	0.000	0.000	0.000	0.004	0.372	0.015	0.000	0.350
Steele City	SD	Tripp	578.234	578.451	0.217	SD123	Wewela fine sandy loam, 3 to 6 percent slopes	0.000	0.000	0.002	0.000	0.002	0.217	0.002	0.000	0.011
Steele City	SD	Tripp	578.451	578.510	0.058	SD123	Anselmo-Vetal fine sandy loams, 0 to 3 percent slopes	0.000	0.000	0.001	0.058	0.002	0.058	0.000	0.000	0.038
Steele City	SD	Tripp	578.510	578.753	0.243	SD123	Wewela fine sandy loam, 3 to 6 percent slopes	0.000	0.000	0.002	0.000	0.002	0.243	0.002	0.000	0.012
Steele City	SD	Tripp	578.753	578.906	0.153	SD123	Wewela fine sandy loam, 0 to 3 percent slopes	0.000	0.000	0.006	0.000	0.002	0.153	0.000	0.000	0.012
Steele City	SD	Tripp	578.906	578.937	0.032	SD123	Wewela fine sandy loam, 3 to 6 percent slopes	0.000	0.000	0.000	0.000	0.000	0.032	0.000	0.000	0.002
Steele City	SD	Tripp	578.937	578.990	0.053	SD123	Longpine-Rock outcrop complex, 15 to 40 percent slopes	0.003	0.046	0.000	0.000	0.000	0.053	0.042	0.016	0.033
Steele City	SD	Tripp	578.990	579.101	0.111	SD123	Doger loamy fine sand, 0 to 6 percent slopes	0.102	0.000	0.001	0.000	0.000	0.111	0.001	0.001	0.105
Steele City	SD	Tripp	579.101	579.287	0.186	SD123	Whitelake fine sandy loam	0.006	0.000	0.169	0.000	0.002	0.186	0.000	0.000	0.179
Steele City	SD	Tripp	579.287	579.431	0.144	SD123	Whitelake-Lute fine sandy loams	0.013	0.000	0.115	0.000	0.001	0.144	0.000	0.000	0.099
Steele City	SD	Tripp	579.431	579.468	0.037	SD123	Whitelake fine sandy loam	0.001	0.000	0.033	0.000	0.000	0.037	0.000	0.000	0.035
Steele City	SD	Tripp	579.468	579.494	0.026	SD123	Whitelake-Lute fine sandy loams	0.002	0.000	0.021	0.000	0.000	0.026	0.000	0.000	0.018
Steele City	SD	Tripp	579.494	579.696	0.202	SD123	Whitelake fine sandy loam	0.006	0.000	0.184	0.000	0.002	0.202	0.000	0.000	0.194
Steele City	SD	Tripp	579.696	579.789	0.093	SD123	Doger loamy fine sand, 0 to 6 percent slopes	0.086	0.000	0.001	0.000	0.000	0.093	0.001	0.001	0.088

Appendix K – Soils by Milepost – Steele City Segment

Pipeline Segment	State	County	Beginning Milepost	Ending Milepost	Miles	Soil Series	Soil Series Name	Wind (miles)	Water (miles)	Low revegetation on Potential (miles)	Prime Farmland (miles)	Hydric Soils (miles)	Compaction on Prone (miles)	Stoney – Rocky (miles)	Shallow Bedrock (miles)	Droghty (miles)
Steele City	SD	Tripp	579.789	579.934	0.145	SD123	Dunday-Doger loamy fine sands, 3 to 9 percent slopes	0.138	0.000	0.000	0.000	0.001	0.145	0.000	0.000	0.138
Steele City	SD	Tripp	579.934	580.312	0.378	SD123	Valentine-Longpine complex, 6 to 15 percent slopes	0.295	0.000	0.000	0.000	0.000	0.378	0.083	0.008	0.370
Steele City	SD	Tripp	580.312	580.396	0.085	SD123	Doger loamy fine sand, 0 to 6 percent slopes	0.078	0.000	0.001	0.000	0.000	0.085	0.001	0.001	0.080
Steele City	SD	Tripp	580.396	580.441	0.045	SD123	Valentine-Longpine complex, 6 to 15 percent slopes	0.035	0.000	0.000	0.000	0.000	0.045	0.010	0.001	0.044
Steele City	SD	Tripp	580.441	580.555	0.114	SD123	Doger loamy fine sand, 0 to 6 percent slopes	0.105	0.000	0.001	0.000	0.000	0.114	0.001	0.001	0.108
Steele City	SD	Tripp	580.555	580.674	0.119	SD123	Dunday loamy fine sand, 3 to 9 percent slopes, eroded	0.115	0.000	0.000	0.000	0.001	0.119	0.001	0.001	0.115
Steele City	SD	Tripp	580.674	580.725	0.052	SD123	Doger-Elsmere complex, 0 to 3 percent slopes	0.027	0.000	0.001	0.000	0.002	0.052	0.000	0.000	0.028
Steele City	SD	Tripp	580.725	580.848	0.122	SD123	Valentine-Longpine complex, 6 to 15 percent slopes	0.095	0.000	0.000	0.000	0.000	0.122	0.027	0.002	0.120
Steele City	SD	Tripp	580.848	581.058	0.211	SD123	Valentine-Dunday complex, 3 to 9 percent slopes	0.200	0.000	0.000	0.000	0.002	0.211	0.008	0.002	0.207
Steele City	SD	Tripp	581.058	581.103	0.044	SD123	Dunday loamy fine sand, 3 to 9 percent slopes, eroded	0.043	0.000	0.000	0.000	0.000	0.044	0.000	0.000	0.043
Steele City	SD	Tripp	581.103	581.140	0.037	SD123	Doger-Elsmere complex, 0 to 3 percent slopes	0.020	0.000	0.001	0.000	0.001	0.037	0.000	0.000	0.020
Steele City	SD	Tripp	581.140	581.223	0.083	SD123	Dunday loamy fine sand, 3 to 9 percent slopes, eroded	0.081	0.000	0.000	0.000	0.001	0.083	0.001	0.001	0.081
Steele City	SD	Tripp	581.223	581.311	0.088	SD123	Doger-Elsmere complex, 0 to 3 percent slopes	0.047	0.000	0.002	0.000	0.003	0.088	0.000	0.000	0.048
Steele City	SD	Tripp	581.311	581.419	0.108	SD123	Dunday loamy fine sand, 3 to 9 percent slopes, eroded	0.105	0.000	0.000	0.000	0.001	0.108	0.001	0.001	0.105
Steele City	SD	Tripp	581.419	581.472	0.054	SD123	Valentine-Dunday complex, 3 to 9 percent slopes	0.051	0.000	0.000	0.000	0.001	0.054	0.002	0.001	0.053
Steele City	SD	Tripp	581.472	581.491	0.019	SD123	Doger loamy fine sand, 0 to 6 percent slopes	0.017	0.000	0.000	0.000	0.000	0.019	0.000	0.000	0.018
Steele City	SD	Tripp	581.491	581.566	0.076	SD123	Valentine-Dunday complex, 3 to 9 percent slopes	0.072	0.000	0.000	0.000	0.001	0.076	0.003	0.001	0.074
Steele City	SD	Tripp	581.566	581.740	0.173	SD123	Doger loamy fine sand, 0 to 6 percent slopes	0.159	0.000	0.002	0.000	0.000	0.173	0.002	0.002	0.165
Steele City	SD	Tripp	581.740	581.816	0.077	SD123	Valentine-Dunday complex, 3 to 9 percent slopes	0.073	0.000	0.000	0.000	0.001	0.077	0.003	0.001	0.075
Steele City	SD	Tripp	581.816	582.023	0.207	SD123	Dunday loamy fine sand, 3 to 9 percent slopes, eroded	0.201	0.000	0.000	0.000	0.002	0.207	0.002	0.002	0.201
Steele City	SD	Tripp	582.023	582.105	0.082	SD123	Doger-Elsmere complex, 0 to 3 percent slopes	0.043	0.000	0.002	0.000	0.002	0.082	0.000	0.000	0.045
Steele City	SD	Tripp	582.105	582.309	0.204	SD123	Dunday-Doger loamy fine sands, 3 to 9 percent slopes	0.194	0.000	0.000	0.000	0.002	0.204	0.000	0.000	0.194
Steele City	SD	Tripp	582.309	582.353	0.044	SD123	Ronson fine sandy loam, 0 to 4 percent slopes	0.001	0.000	0.001	0.000	0.000	0.044	0.001	0.000	0.004
Steele City	SD	Tripp	582.353	582.356	0.003	SD123	Dunday-Doger loamy fine sands, 3 to 9 percent slopes	0.003	0.000	0.000	0.000	0.000	0.003	0.000	0.000	0.003
Steele City	SD	Tripp	582.356	582.750	0.394	SD123	Doger loamy fine sand, 0 to 6 percent slopes	0.362	0.000	0.004	0.000	0.000	0.394	0.004	0.004	0.374
Steele City	SD	Tripp	582.750	582.870	0.119	SD123	Doger-Elsmere complex, 0 to 3 percent slopes	0.063	0.000	0.002	0.000	0.004	0.119	0.000	0.000	0.066
Steele City	SD	Tripp	582.870	583.134	0.264	SD123	Dunday loamy fine sand, 3 to 9 percent slopes, eroded	0.256	0.000	0.000	0.000	0.003	0.264	0.003	0.003	0.256
Steele City	SD	Tripp	583.134	583.312	0.178	SD123	Doger loamy fine sand, 0 to 6 percent slopes	0.164	0.000	0.002	0.000	0.000	0.178	0.002	0.002	0.169
Steele City	SD	Tripp	583.312	583.401	0.089	SD123	Holt-Anselmo fine sandy loams, 0 to 3 percent slopes	0.000	0.000	0.000	0.000	0.001	0.089	0.004	0.000	0.083
Steele City	SD	Tripp	583.401	583.475	0.074	SD123	Dunday-Doger loamy fine sands, 3 to 9 percent slopes	0.070	0.000	0.000	0.000	0.001	0.074	0.000	0.000	0.070
Steele City	SD	Tripp	583.475	583.764	0.289	SD123	Wewela fine sandy loam, 3 to 6 percent slopes	0.000	0.000	0.003	0.000	0.003	0.289	0.003	0.000	0.014
Steele City	SD	Tripp	583.764	583.766	0.002	SD123	Doger loamy fine sand, 0 to 6 percent slopes	0.002	0.000	0.000	0.000	0.000	0.002	0.000	0.000	0.002
Steele City	SD	Tripp	583.766	583.868	0.101	SD123	Anselmo-Holt fine sandy loams, 3 to 9 percent slopes	0.000	0.000	0.000	0.101	0.001	0.101	0.005	0.000	0.096

Appendix K – Soils by Milepost – Steele City Segment

Pipeline Segment	State	County	Beginning Milepost	Ending Milepost	Miles	Soil Series	Soil Series Name	Wind (miles)	Water (miles)	Low revegetation on Potential (miles)	Prime Farmland (miles)	Hydric Soils (miles)	Compaction on Prone (miles)	Stoney – Rocky (miles)	Shallow Bedrock (miles)	Droghty (miles)
Steele City	SD	Tripp	583.868	583.869	0.002	SD123	Doger loamy fine sand, 0 to 6 percent slopes	0.001	0.000	0.000	0.000	0.000	0.002	0.000	0.000	0.001
Steele City	SD	Tripp	583.869	584.002	0.133	SD123	Anselmo-Holt fine sandy loams, 3 to 9 percent slopes	0.000	0.000	0.000	0.133	0.001	0.133	0.007	0.000	0.126
Steele City	SD	Tripp	584.002	584.105	0.103	SD123	Doger loamy fine sand, 0 to 6 percent slopes	0.095	0.000	0.001	0.000	0.000	0.103	0.001	0.001	0.098
Steele City	SD	Tripp	584.105	584.174	0.069	SD123	Doger-Elsmere complex, 0 to 3 percent slopes	0.037	0.000	0.001	0.000	0.002	0.069	0.000	0.000	0.038
Steele City	SD	Tripp	584.174	584.311	0.137	SD123	Dunday-Doger loamy fine sands, 3 to 9 percent slopes	0.130	0.000	0.000	0.000	0.001	0.137	0.000	0.000	0.130
Steele City	SD	Tripp	584.311	584.396	0.084	SD123	Dunday loamy fine sand, 3 to 9 percent slopes, eroded	0.082	0.000	0.000	0.000	0.001	0.084	0.001	0.001	0.082
Steele City	SD	Tripp	584.396	584.634	0.239	SD123	Dunday-Doger loamy fine sands, 3 to 9 percent slopes	0.227	0.000	0.000	0.000	0.002	0.239	0.000	0.000	0.227
Steele City	SD	Tripp	584.634	584.839	0.205	SD123	Doger loamy fine sand, 0 to 6 percent slopes	0.188	0.000	0.002	0.000	0.000	0.205	0.002	0.002	0.194
Steele City	SD	Tripp	584.839	585.092	0.253	SD123	Dunday-Doger loamy fine sands, 3 to 9 percent slopes	0.241	0.000	0.000	0.000	0.003	0.253	0.000	0.000	0.241
Steele City	SD	Tripp	585.092	585.584	0.492	SD123	Doger loamy fine sand, 0 to 6 percent slopes	0.453	0.000	0.005	0.000	0.000	0.492	0.005	0.005	0.468
Steele City	SD	Tripp	585.584	586.076	0.492	SD123	Anselmo-Holt fine sandy loams, 3 to 9 percent slopes	0.000	0.000	0.000	0.492	0.005	0.492	0.025	0.000	0.467
Steele City	SD	Tripp	586.076	586.176	0.100	SD123	Holt-Anselmo fine sandy loams, 0 to 3 percent slopes	0.000	0.000	0.000	0.000	0.001	0.100	0.004	0.000	0.094
Steele City	SD	Tripp	586.176	586.656	0.480	SD123	Anselmo-Holt fine sandy loams, 3 to 9 percent slopes	0.000	0.000	0.000	0.480	0.005	0.480	0.024	0.000	0.456
Steele City	SD	Tripp	586.656	586.674	0.018	SD123	Doger loamy fine sand, 0 to 6 percent slopes	0.016	0.000	0.000	0.000	0.000	0.018	0.000	0.000	0.017
Steele City	SD	Tripp	586.674	586.789	0.116	SD123	Doger-Elsmere complex, 0 to 3 percent slopes	0.061	0.000	0.002	0.000	0.003	0.116	0.000	0.000	0.064
Steele City	SD	Tripp	586.789	586.876	0.087	SD123	Dunday loamy fine sand, 3 to 9 percent slopes, eroded	0.084	0.000	0.000	0.000	0.001	0.087	0.001	0.001	0.084
Steele City	SD	Tripp	586.876	587.085	0.209	SD123	Ronson-Longpine fine sandy loams, 0 to 6 percent slopes	0.013	0.000	0.002	0.000	0.002	0.209	0.073	0.000	0.100
Steele City	SD	Tripp	587.085	587.209	0.124	SD123	Ronson fine sandy loam, 0 to 4 percent slopes	0.004	0.000	0.004	0.000	0.000	0.124	0.004	0.000	0.011
Steele City	SD	Tripp	587.209	587.248	0.039	SD123	Anselmo-Longpine fine sandy loams, 10 to 20 percent slopes	0.004	0.031	0.000	0.000	0.000	0.039	0.009	0.002	0.033
Steele City	SD	Tripp	587.248	587.510	0.262	SD123	Manter-Anselmo fine sandy loams, 15 to 30 percent slopes	0.000	0.257	0.000	0.000	0.005	0.262	0.021	0.000	0.230
Steele City	SD	Tripp	587.510	587.635	0.125	SD123	Anselmo-Longpine fine sandy loams, 10 to 20 percent slopes	0.011	0.099	0.000	0.000	0.000	0.125	0.030	0.005	0.105
Steele City	SD	Tripp	587.635	587.699	0.063	SD123	Holt-Anselmo fine sandy loams, 0 to 3 percent slopes	0.000	0.000	0.000	0.000	0.001	0.063	0.003	0.000	0.060
Steele City	SD	Tripp	587.699	587.795	0.096	SD123	Anselmo-Longpine fine sandy loams, 10 to 20 percent slopes	0.009	0.076	0.000	0.000	0.000	0.096	0.023	0.004	0.081
Steele City	SD	Tripp	587.795	587.917	0.122	SD123	Holt-Anselmo fine sandy loams, 0 to 3 percent slopes	0.000	0.000	0.000	0.000	0.001	0.122	0.005	0.000	0.115
Steele City	SD	Tripp	587.917	588.013	0.096	SD123	Anselmo-Longpine fine sandy loams, 10 to 20 percent slopes	0.009	0.076	0.000	0.000	0.000	0.096	0.023	0.004	0.081
Steele City	SD	Tripp	588.013	588.477	0.465	SD123	Manter fine sandy loam, 3 to 9 percent slopes	0.014	0.000	0.000	0.465	0.005	0.465	0.005	0.000	0.437
Steele City	SD	Tripp	588.477	588.648	0.171	SD123	Anselmo-Longpine fine sandy loams, 10 to 20 percent slopes	0.015	0.135	0.000	0.000	0.000	0.171	0.041	0.007	0.143
Steele City	SD	Tripp	588.648	588.792	0.144	SD123	Manter fine sandy loam, 3 to 9 percent slopes	0.004	0.000	0.000	0.144	0.001	0.144	0.001	0.000	0.136

Appendix K – Soils by Milepost – Steele City Segment

Pipeline Segment	State	County	Beginning Milepost	Ending Milepost	Miles	Soil Series	Soil Series Name	Wind (miles)	Water (miles)	Low revegetation on Potential (miles)	Prime Farmland (miles)	Hydric Soils (miles)	Compaction on Prone (miles)	Stoney – Rocky (miles)	Shallow Bedrock (miles)	Droghty (miles)
Steele City	SD	Tripp	588.792	588.954	0.161	SD123	Wewela fine sandy loam, 3 to 6 percent slopes	0.000	0.000	0.002	0.000	0.002	0.161	0.002	0.000	0.008
Steele City	SD	Tripp	588.954	589.020	0.066	SD123	Manter-Anselmo fine sandy loams, 15 to 30 percent slopes	0.000	0.065	0.000	0.000	0.001	0.066	0.005	0.000	0.058
Steele City	SD	Tripp	589.020	589.215	0.195	SD123	Manter fine sandy loam, 3 to 9 percent slopes	0.006	0.000	0.000	0.195	0.002	0.195	0.002	0.000	0.184
Steele City	SD	Tripp	589.215	589.325	0.110	SD123	Manter-Anselmo fine sandy loams, 15 to 30 percent slopes	0.000	0.108	0.000	0.000	0.002	0.110	0.009	0.000	0.097
Steele City	SD	Tripp	589.325	589.380	0.055	SD123	Wann fine sandy loam	0.003	0.000	0.001	0.055	0.003	0.055	0.000	0.000	0.003
Steele City	SD	Tripp	589.380	589.565	0.185	SD123	Wewela fine sandy loam, 3 to 6 percent slopes	0.000	0.000	0.002	0.000	0.002	0.185	0.002	0.000	0.009
Steele City	SD	Tripp	589.565	589.639	0.074	SD123	Boyd clay, 5 to 9 percent slopes	0.000	0.069	0.004	0.000	0.002	0.074	0.000	0.000	0.002
Steele City	SD	Tripp	589.639	589.681	0.042	SD123	Wann fine sandy loam	0.002	0.000	0.000	0.042	0.002	0.042	0.000	0.000	0.002
Steele City	SD	Tripp	589.681	589.946	0.264	SD123	Boyd clay, 5 to 9 percent slopes	0.000	0.249	0.013	0.000	0.008	0.264	0.000	0.000	0.008
Steele City	SD	Tripp	589.946	589.999	0.054	SD123	Manter-Anselmo fine sandy loams, 15 to 30 percent slopes	0.000	0.053	0.000	0.000	0.001	0.054	0.004	0.000	0.047
Steele City	SD	Tripp	589.999	590.187	0.188	SD123	Manter fine sandy loam, 0 to 3 percent slopes	0.000	0.000	0.000	0.188	0.004	0.188	0.009	0.000	0.178
Steele City	SD	Tripp	590.187	590.306	0.119	SD123	Manter-Anselmo fine sandy loams, 15 to 30 percent slopes	0.000	0.117	0.000	0.000	0.002	0.119	0.010	0.000	0.105
Steele City	SD	Tripp	590.306	590.765	0.459	SD123	Boyd-Okaton association, 9 to 25 percent slopes	0.000	0.423	0.005	0.000	0.005	0.459	0.000	0.000	0.032
Steele City	SD	Tripp	590.765	591.171	0.406	SD123	Anselmo-Longpine fine sandy loams, 10 to 20 percent slopes	0.037	0.321	0.000	0.000	0.000	0.406	0.097	0.016	0.341
Steele City	SD	Tripp	591.171	591.190	0.019	SD123	Manter-Anselmo fine sandy loams, 15 to 30 percent slopes	0.000	0.019	0.000	0.000	0.000	0.019	0.002	0.000	0.017
Steele City	SD	Tripp	591.190	591.258	0.068	SD123	Anselmo-Longpine fine sandy loams, 10 to 20 percent slopes	0.006	0.054	0.000	0.000	0.000	0.068	0.016	0.003	0.057
Steele City	SD	Tripp	591.258	591.298	0.040	SD123	Longpine-Rock outcrop complex, 15 to 40 percent slopes	0.002	0.035	0.000	0.000	0.000	0.040	0.032	0.012	0.025
Steele City	SD	Tripp	591.298	591.379	0.081	SD123	Boyd-Okaton association, 9 to 25 percent slopes	0.000	0.075	0.001	0.000	0.001	0.081	0.000	0.000	0.006
Steele City	SD	Tripp	591.379	591.467	0.088	SD123	Longpine-Rock outcrop complex, 15 to 40 percent slopes	0.004	0.077	0.000	0.000	0.000	0.088	0.070	0.026	0.055
Steele City	SD	Tripp	591.467	591.572	0.104	SD123	Anselmo fine sandy loam, 6 to 9 percent slopes	0.003	0.094	0.000	0.104	0.001	0.104	0.000	0.000	0.102
Steele City	SD	Tripp	591.572	591.686	0.115	SD123	Manter-Anselmo fine sandy loams, 15 to 30 percent slopes	0.000	0.112	0.000	0.000	0.002	0.115	0.009	0.000	0.101
Steele City	SD	Tripp	591.686	591.787	0.101	SD123	Anselmo fine sandy loam, 6 to 9 percent slopes	0.003	0.091	0.000	0.101	0.001	0.101	0.000	0.000	0.099
Steele City	SD	Tripp	591.787	591.910	0.123	SD123	Manter-Anselmo fine sandy loams, 15 to 30 percent slopes	0.000	0.120	0.000	0.000	0.002	0.123	0.010	0.000	0.108
Steele City	SD	Tripp	591.910	591.949	0.039	SD123	Anselmo fine sandy loam, 6 to 9 percent slopes	0.001	0.035	0.000	0.039	0.000	0.039	0.000	0.000	0.038
Steele City	SD	Tripp	591.949	592.105	0.156	SD123	Manter-Anselmo fine sandy loams, 15 to 30 percent slopes	0.000	0.153	0.000	0.000	0.003	0.156	0.012	0.000	0.137
Steele City	SD	Tripp	592.105	592.655	0.551	SD123	Anselmo-Longpine fine sandy loams, 10 to 20 percent slopes	0.050	0.435	0.000	0.000	0.000	0.551	0.132	0.022	0.463
Steele City	SD	Tripp	592.655	592.892	0.236	SD123	Manter-Anselmo fine sandy loams, 15 to 30 percent slopes	0.000	0.231	0.000	0.000	0.005	0.236	0.019	0.000	0.208
Steele City	SD	Tripp	592.892	592.992	0.100	SD123	Ree loam, 3 to 6 percent slopes	0.000	0.003	0.003	0.100	0.003	0.100	0.000	0.000	0.000
Steele City	SD	Tripp	592.992	593.109	0.117	SD123	Manter fine sandy loam, 0 to 3 percent slopes	0.000	0.000	0.000	0.117	0.002	0.117	0.006	0.000	0.111
Steele City	SD	Tripp	593.109	593.113	0.004	SD123	Ree loam, 3 to 6 percent slopes	0.000	0.000	0.000	0.004	0.000	0.004	0.000	0.000	0.000
Steele City	SD	Tripp	593.113	593.137	0.024	SD123	Manter fine sandy loam, 0 to 3 percent slopes	0.000	0.000	0.000	0.024	0.000	0.024	0.001	0.000	0.023

Appendix K – Soils by Milepost – Steele City Segment

Pipeline Segment	State	County	Beginning Milepost	Ending Milepost	Miles	Soil Series	Soil Series Name	Wind (miles)	Water (miles)	Low revegetation on Potential (miles)	Prime Farmland (miles)	Hydric Soils (miles)	Compaction on Prone (miles)	Stoney – Rocky (miles)	Shallow Bedrock (miles)	Droghty (miles)
Steele City	SD	Tripp	593.137	593.174	0.037	SD123	Manter-Anselmo fine sandy loams, 15 to 30 percent slopes	0.000	0.036	0.000	0.000	0.001	0.037	0.003	0.000	0.032
Steele City	SD	Tripp	593.174	593.602	0.428	SD123	Boyd-Okaton association, 9 to 25 percent slopes	0.000	0.393	0.004	0.000	0.004	0.428	0.000	0.000	0.030
Steele City	SD	Tripp	593.602	593.745	0.143	SD123	Manter-Anselmo fine sandy loams, 15 to 30 percent slopes	0.000	0.140	0.000	0.000	0.003	0.143	0.011	0.000	0.126
Steele City	SD	Tripp	593.745	593.970	0.225	SD123	Boyd-Okaton association, 9 to 25 percent slopes	0.000	0.207	0.002	0.000	0.002	0.225	0.000	0.000	0.016
Steele City	SD	Tripp	593.970	594.047	0.078	SD123	Promise clay, 3 to 6 percent slopes	0.000	0.000	0.077	0.078	0.002	0.078	0.000	0.000	0.000
Steele City	SD	Tripp	594.047	594.180	0.133	SD123	Bridgeport complex, channeled	0.009	0.000	0.021	0.000	0.001	0.133	0.000	0.000	0.015
Steele City	SD	Tripp	594.180	594.319	0.138	SD123	Bridgeport complex	0.000	0.000	0.039	0.138	0.000	0.138	0.000	0.000	0.003
Steele City	SD	Tripp	594.319	594.381	0.063	SD123	Promise clay, 3 to 6 percent slopes	0.000	0.000	0.062	0.063	0.001	0.063	0.000	0.000	0.000
Steele City	SD	Tripp	594.381	594.537	0.156	SD123	Dix soils, 9 to 18 percent slopes	0.000	0.148	0.000	0.000	0.000	0.156	0.140	0.000	0.148
Steele City	SD	Tripp	594.537	594.661	0.124	SD123	Anselmo-Vetal fine sandy loams, 0 to 3 percent slopes	0.000	0.000	0.002	0.124	0.004	0.124	0.000	0.000	0.081
Steele City	SD	Tripp	594.661	594.691	0.030	SD123	Dix soils, 9 to 18 percent slopes	0.000	0.028	0.000	0.000	0.000	0.030	0.027	0.000	0.028
Steele City	SD	Tripp	594.691	594.949	0.258	SD123	Anselmo-Vetal fine sandy loams, 0 to 3 percent slopes	0.000	0.000	0.005	0.258	0.008	0.258	0.000	0.000	0.168
Steele City	SD	Tripp	594.949	595.069	0.120	SD123	Manter-Anselmo fine sandy loams, 15 to 30 percent slopes	0.000	0.118	0.000	0.000	0.002	0.120	0.010	0.000	0.106
Steele City	SD	Tripp	595.069	595.104	0.035	SD123	Boyd-Okaton association, 9 to 25 percent slopes	0.000	0.032	0.000	0.000	0.000	0.035	0.000	0.000	0.002
Steele City	NE	Keya Paha	595.104	595.204	0.100	NE103	Labu silty clay, 6 to 11 percent slopes	0.000	0.099	0.000	0.000	0.001	0.100	0.000	0.000	0.000
Steele City	NE	Keya Paha	595.204	595.239	0.035	NE103	Labu-Sansarc silty clays, 11 to 30 percent slopes	0.000	0.034	0.000	0.000	0.001	0.035	0.000	0.000	0.000
Steele City	NE	Keya Paha	595.239	595.310	0.071	NE103	Labu silty clay, 6 to 11 percent slopes	0.000	0.070	0.000	0.000	0.001	0.071	0.000	0.000	0.000
Steele City	NE	Keya Paha	595.310	595.350	0.040	NE103	Verdel silty clay loam, 1 to 3 percent slopes	0.000	0.000	0.000	0.040	0.000	0.040	0.000	0.000	0.000
Steele City	NE	Keya Paha	595.350	595.377	0.027	NE103	Labu silty clay, 6 to 11 percent slopes	0.000	0.026	0.000	0.000	0.000	0.027	0.000	0.000	0.000
Steele City	NE	Keya Paha	595.377	595.417	0.041	NE103	Verdel silty clay loam, 1 to 3 percent slopes	0.000	0.000	0.000	0.041	0.000	0.041	0.000	0.000	0.000
Steele City	NE	Keya Paha	595.417	595.420	0.003	NE103	Labu silty clay, 6 to 11 percent slopes	0.000	0.003	0.000	0.000	0.000	0.003	0.000	0.000	0.000
Steele City	NE	Keya Paha	595.420	595.491	0.071	NE103	Verdel silty clay loam, 1 to 3 percent slopes	0.000	0.000	0.000	0.071	0.000	0.071	0.000	0.000	0.000
Steele City	NE	Keya Paha	595.491	595.497	0.007	NE103	Labu silty clay, 6 to 11 percent slopes	0.000	0.006	0.000	0.000	0.000	0.007	0.000	0.000	0.000
Steele City	NE	Keya Paha	595.497	595.832	0.335	NE103	Labu-Sansarc silty clays, 11 to 30 percent slopes	0.000	0.328	0.000	0.000	0.007	0.335	0.000	0.000	0.000
Steele City	NE	Keya Paha	595.832	595.873	0.041	NE103	Labu silty clay, 6 to 11 percent slopes	0.000	0.040	0.000	0.000	0.000	0.041	0.000	0.000	0.000
Steele City	NE	Keya Paha	595.873	595.928	0.055	NE103	Manter fine sandy loam, 2 to 6 percent slopes	0.000	0.000	0.000	0.055	0.000	0.055	0.000	0.000	0.055
Steele City	NE	Keya Paha	595.928	595.984	0.056	NE103	Labu silty clay, 6 to 11 percent slopes	0.000	0.056	0.000	0.000	0.001	0.056	0.000	0.000	0.000
Steele City	NE	Keya	595.984	596.209	0.225	NE103	Labu-Sansarc silty clays, 11 to 30 percent slopes	0.000	0.220	0.000	0.000	0.004	0.225	0.000	0.000	0.000

Appendix K – Soils by Milepost – Steele City Segment

Pipeline Segment	State	County	Beginning Milepost	Ending Milepost	Miles	Soil Series	Soil Series Name	Wind (miles)	Water (miles)	Low revegetation on Potential (miles)	Prime Farmland (miles)	Hydric Soils (miles)	Compaction on Prone (miles)	Stoney – Rocky (miles)	Shallow Bedrock (miles)	Droghty (miles)
		Paha														
Steele City	NE	Keya Paha	596.209	596.249	0.040	NE103	Cass loam, channeled, 0 to 3 percent slopes	0.000	0.000	0.000	0.000	0.000	0.040	0.000	0.000	0.040
Steele City	NE	Keya Paha	596.249	596.292	0.043	NE103	Verdel silty clay loam, 0 to 1 percent slopes	0.000	0.000	0.000	0.000	0.000	0.043	0.000	0.000	0.000
Steele City	NE	Keya Paha	596.292	596.441	0.149	NE103	Labu silty clay, 6 to 11 percent slopes	0.000	0.147	0.000	0.000	0.001	0.149	0.000	0.000	0.000
Steele City	NE	Keya Paha	596.441	596.484	0.043	NE103	Labu-Sansarc silty clays, 11 to 30 percent slopes	0.000	0.042	0.000	0.000	0.001	0.043	0.000	0.000	0.000
Steele City	NE	Keya Paha	596.484	596.569	0.085	NE103	Labu silty clay, 6 to 11 percent slopes	0.000	0.084	0.000	0.000	0.001	0.085	0.000	0.000	0.000
Steele City	NE	Keya Paha	596.569	596.604	0.035	NE103	Labu-Sansarc silty clays, 11 to 30 percent slopes	0.000	0.034	0.000	0.000	0.001	0.035	0.000	0.000	0.000
Steele City	NE	Keya Paha	596.604	596.650	0.046	NE103	Labu silty clay, 6 to 11 percent slopes	0.000	0.046	0.000	0.000	0.000	0.046	0.000	0.000	0.000
Steele City	NE	Keya Paha	596.650	597.282	0.631	NE103	Labu-Sansarc silty clays, 11 to 30 percent slopes	0.000	0.619	0.000	0.000	0.013	0.631	0.000	0.000	0.000
Steele City	NE	Keya Paha	597.282	597.333	0.051	NE103	Labu silty clay, 6 to 11 percent slopes	0.000	0.051	0.000	0.000	0.001	0.051	0.000	0.000	0.000
Steele City	NE	Keya Paha	597.333	597.393	0.060	NE103	Verdel silty clay loam, 3 to 6 percent slopes	0.000	0.000	0.000	0.000	0.000	0.060	0.000	0.000	0.000
Steele City	NE	Keya Paha	597.393	597.441	0.049	NE103	Labu silty clay, 6 to 11 percent slopes	0.000	0.048	0.000	0.000	0.000	0.049	0.000	0.000	0.000
Steele City	NE	Keya Paha	597.441	597.542	0.101	NE103	Labu-Sansarc silty clays, 11 to 30 percent slopes	0.000	0.099	0.000	0.000	0.002	0.101	0.000	0.000	0.000
Steele City	NE	Keya Paha	597.542	597.564	0.022	NE103	Labu silty clay, 6 to 11 percent slopes	0.000	0.021	0.000	0.000	0.000	0.022	0.000	0.000	0.000
Steele City	NE	Keya Paha	597.564	597.640	0.076	NE103	Verdel silty clay loam, 1 to 3 percent slopes	0.000	0.000	0.000	0.000	0.000	0.076	0.000	0.000	0.000
Steele City	NE	Keya Paha	597.640	597.806	0.166	NE103	Vetal loam, 0 to 1 percent slopes	0.000	0.000	0.000	0.000	0.002	0.166	0.000	0.000	0.165
Steele City	NE	Keya Paha	597.806	597.991	0.185	NE103	Cass loam, 0 to 2 percent slopes	0.000	0.000	0.000	0.000	0.002	0.185	0.000	0.000	0.183
Steele City	NE	Keya Paha	597.991	598.007	0.017	NE103	Inavale loamy fine sand, 0 to 3 percent slopes	0.016	0.000	0.000	0.000	0.001	0.017	0.000	0.000	0.016
Steele City	NE	Keya Paha	598.007	598.090	0.083	NE103	Inavale fine sand, 3 to 11 percent slopes	0.083	0.000	0.000	0.000	0.000	0.083	0.000	0.000	0.083
Steele City	NE	Keya Paha	598.090	598.106	0.016	NE103	Cass loam, 0 to 2 percent slopes	0.000	0.000	0.000	0.000	0.000	0.016	0.000	0.000	0.016
Steele City	NE	Keya Paha	598.106	598.183	0.076	NE103	Inavale loamy fine sand, 0 to 3 percent slopes	0.072	0.000	0.000	0.000	0.004	0.076	0.000	0.000	0.072
Steele City	NE	Keya Paha	598.183	598.243	0.061	NE103	Inavale fine sand, channeled, 0 to 3 percent slopes	0.057	0.000	0.000	0.000	0.003	0.061	0.000	0.000	0.057
Steele City	NE	Keya Paha	598.243	598.273	0.030	NE103	Water	0.000	0.000	0.000	0.000	0.000	0.030	0.000	0.000	0.000
Steele City	NE	Keya	598.273	598.366	0.093	NE103	Inavale loamy fine sand, 0 to 3 percent slopes	0.088	0.000	0.000	0.000	0.005	0.093	0.000	0.000	0.088

Appendix K – Soils by Milepost – Steele City Segment

Pipeline Segment	State	County	Beginning Milepost	Ending Milepost	Miles	Soil Series	Soil Series Name	Wind (miles)	Water (miles)	Low revegetation on Potential (miles)	Prime Farmland (miles)	Hydric Soils (miles)	Compaction on Prone (miles)	Stoney – Rocky (miles)	Shallow Bedrock (miles)	Droghty (miles)
		Paha														
Steele City	NE	Keya Paha	598.366	598.394	0.028	NE103	Cass loam, 0 to 2 percent slopes	0.000	0.000	0.000	0.000	0.000	0.028	0.000	0.000	0.028
Steele City	NE	Keya Paha	598.394	598.478	0.084	NE103	Valentine-Wewela loamy fine sands, 6 to 30 percent slopes	0.108	0.083	0.000	0.000	0.001	0.084	0.025	0.000	0.083
Steele City	NE	Keya Paha	598.478	598.951	0.474	NE103	O'Neill fine sandy loam, 0 to 2 percent slopes	0.000	0.000	0.000	0.000	0.005	0.474	0.469	0.000	0.469
Steele City	NE	Keya Paha	598.951	599.130	0.178	NE103	O'Neill fine sandy loam, 2 to 6 percent slopes	0.000	0.000	0.000	0.000	0.002	0.178	0.177	0.000	0.177
Steele City	NE	Keya Paha	599.130	599.153	0.023	NE103	O'Neill fine sandy loam, 0 to 2 percent slopes	0.000	0.000	0.000	0.000	0.000	0.023	0.023	0.000	0.023
Steele City	NE	Keya Paha	599.153	599.256	0.104	NE103	O'Neill fine sandy loam, 2 to 6 percent slopes	0.000	0.000	0.000	0.000	0.001	0.104	0.102	0.000	0.102
Steele City	NE	Keya Paha	599.256	599.376	0.120	NE103	O'Neill fine sandy loam, 0 to 2 percent slopes	0.000	0.000	0.000	0.000	0.001	0.120	0.118	0.000	0.118
Steele City	NE	Keya Paha	599.376	599.459	0.083	NE103	Valentine-Wewela loamy fine sands, 6 to 30 percent slopes	0.106	0.082	0.000	0.000	0.001	0.083	0.025	0.000	0.082
Steele City	NE	Keya Paha	599.459	599.677	0.219	NE103	Dunday loamy fine sand, 0 to 3 percent slopes	0.217	0.000	0.000	0.000	0.002	0.219	0.000	0.000	0.217
Steele City	NE	Keya Paha	599.677	599.745	0.067	NE103	Valentine-Wewela loamy fine sands, 6 to 30 percent slopes	0.086	0.067	0.000	0.000	0.001	0.067	0.020	0.000	0.067
Steele City	NE	Keya Paha	599.745	599.813	0.068	NE103	Dunday loamy fine sand, 0 to 3 percent slopes	0.068	0.000	0.000	0.000	0.001	0.068	0.000	0.000	0.068
Steele City	NE	Keya Paha	599.813	599.876	0.063	NE103	Vetal fine sandy loam, 0 to 2 percent slopes	0.000	0.000	0.000	0.000	0.001	0.063	0.000	0.000	0.062
Steele City	NE	Keya Paha	599.876	600.067	0.191	NE103	Dunday loamy fine sand, 0 to 3 percent slopes	0.189	0.000	0.000	0.000	0.002	0.191	0.000	0.000	0.189
Steele City	NE	Keya Paha	600.067	600.129	0.063	NE103	Wewela fine sandy loam, 3 to 6 percent slopes	0.000	0.000	0.000	0.000	0.000	0.063	0.000	0.000	0.000
Steele City	NE	Keya Paha	600.129	600.253	0.124	NE103	Wewela fine sandy loam, 0 to 3 percent slopes	0.000	0.000	0.000	0.000	0.001	0.124	0.000	0.000	0.000
Steele City	NE	Keya Paha	600.253	600.324	0.071	NE103	Valentine-Wewela loamy fine sands, 6 to 30 percent slopes	0.090	0.070	0.000	0.000	0.001	0.071	0.021	0.000	0.070
Steele City	NE	Keya Paha	600.324	600.581	0.257	NE103	Anselmo fine sandy loam, 2 to 6 percent slopes	0.000	0.000	0.000	0.000	0.003	0.257	0.000	0.000	0.255
Steele City	NE	Keya Paha	600.581	600.615	0.034	NE103	Ipage loamy fine sand, 0 to 3 percent slopes	0.033	0.000	0.000	0.000	0.001	0.034	0.000	0.000	0.033
Steele City	NE	Keya Paha	600.615	600.739	0.124	NE103	Dunday loamy fine sand, 0 to 3 percent slopes	0.123	0.000	0.000	0.000	0.001	0.124	0.000	0.000	0.123
Steele City	NE	Keya Paha	600.739	600.777	0.038	NE103	O'Neill fine sandy loam, 0 to 2 percent slopes	0.000	0.000	0.000	0.000	0.000	0.038	0.037	0.000	0.037
Steele City	NE	Keya Paha	600.777	600.910	0.134	NE103	Wewela fine sandy loam, 0 to 3 percent slopes	0.000	0.000	0.000	0.000	0.001	0.134	0.000	0.000	0.000
Steele City	NE	Keya Paha	600.910	600.947	0.037	NE103	Wewela fine sandy loam, 3 to 6 percent slopes	0.000	0.000	0.000	0.000	0.000	0.037	0.000	0.000	0.000
Steele City	NE	Keya	600.947	600.992	0.045	NE103	Wewela fine sandy loam, 0 to 3 percent slopes	0.000	0.000	0.000	0.000	0.000	0.045	0.000	0.000	0.000

Appendix K – Soils by Milepost – Steele City Segment

Pipeline Segment	State	County	Beginning Milepost	Ending Milepost	Miles	Soil Series	Soil Series Name	Wind (miles)	Water (miles)	Low revegetation on Potential (miles)	Prime Farmland (miles)	Hydric Soils (miles)	Compaction on Prone (miles)	Stoney – Rocky (miles)	Shallow Bedrock (miles)	Droghty (miles)
		Paha														
Steele City	NE	Keya Paha	600.992	601.074	0.082	NE103	Valentine loamy fine sand, gently rolling	0.081	0.000	0.000	0.000	0.001	0.082	0.000	0.000	0.081
Steele City	NE	Keya Paha	601.074	601.150	0.075	NE103	Simeon-Valentine loamy sands, 0 to 3 percent slopes	0.075	0.000	0.000	0.000	0.001	0.075	0.000	0.000	0.075
Steele City	NE	Keya Paha	601.150	601.517	0.368	NE103	Valentine loamy fine sand, gently rolling	0.364	0.000	0.000	0.000	0.004	0.368	0.000	0.000	0.364
Steele City	NE	Keya Paha	601.517	601.545	0.028	NE103	Ipage loamy fine sand, 0 to 3 percent slopes	0.027	0.000	0.000	0.000	0.001	0.028	0.000	0.000	0.027
Steele City	NE	Keya Paha	601.545	601.645	0.100	NE103	Valentine loamy fine sand, gently rolling	0.099	0.000	0.000	0.000	0.001	0.100	0.000	0.000	0.099
Steele City	NE	Keya Paha	601.645	601.729	0.085	NE103	Els fine sand, 0 to 2 percent slopes	0.080	0.000	0.000	0.000	0.004	0.085	0.000	0.000	0.000
Steele City	NE	Keya Paha	601.729	601.777	0.048	NE103	Ipage loamy fine sand, 0 to 3 percent slopes	0.047	0.000	0.000	0.000	0.001	0.048	0.000	0.000	0.047
Steele City	NE	Keya Paha	601.777	601.935	0.158	NE103	Valentine fine sand, rolling	0.158	0.158	0.000	0.000	0.000	0.158	0.000	0.000	0.158
Steele City	NE	Keya Paha	601.935	601.983	0.048	NE103	Ipage loamy fine sand, 0 to 3 percent slopes	0.047	0.000	0.000	0.000	0.001	0.048	0.000	0.000	0.047
Steele City	NE	Keya Paha	601.983	602.389	0.406	NE103	Valentine fine sand, rolling	0.406	0.406	0.000	0.000	0.000	0.406	0.000	0.000	0.406
Steele City	NE	Keya Paha	602.389	602.436	0.047	NE103	Valentine-Wewela loamy fine sands, 6 to 30 percent slopes	0.060	0.047	0.000	0.000	0.000	0.047	0.014	0.000	0.047
Steele City	NE	Keya Paha	602.436	602.487	0.051	NE103	Inavale fine sand, channeled, 0 to 3 percent slopes	0.048	0.000	0.000	0.000	0.003	0.051	0.000	0.000	0.048
Steele City	NE	Keya Paha	602.487	602.518	0.032	NE103	Valentine-Wewela loamy fine sands, 6 to 30 percent slopes	0.040	0.031	0.000	0.000	0.000	0.032	0.009	0.000	0.031
Steele City	NE	Keya Paha	602.518	602.559	0.041	NE103	Valentine loamy fine sand, gently rolling	0.040	0.000	0.000	0.000	0.000	0.041	0.000	0.000	0.040
Steele City	NE	Keya Paha	602.559	602.661	0.102	NE103	Ipage loamy fine sand, 0 to 3 percent slopes	0.100	0.000	0.000	0.000	0.002	0.102	0.000	0.000	0.100
Steele City	NE	Keya Paha	602.661	602.701	0.040	NE103	Dunday loamy fine sand, 0 to 3 percent slopes	0.040	0.000	0.000	0.000	0.000	0.040	0.000	0.000	0.040
Steele City	NE	Keya Paha	602.701	602.767	0.067	NE103	Ipage loamy fine sand, 0 to 3 percent slopes	0.065	0.000	0.000	0.000	0.001	0.067	0.000	0.000	0.065
Steele City	NE	Keya Paha	602.767	602.811	0.044	NE103	Valentine-Wewela loamy fine sands, 6 to 30 percent slopes	0.056	0.044	0.000	0.000	0.000	0.044	0.013	0.000	0.044
Steele City	NE	Keya Paha	602.811	603.122	0.311	NE103	Dunday loamy fine sand, 0 to 3 percent slopes	0.308	0.000	0.000	0.000	0.003	0.311	0.000	0.000	0.308
Steele City	NE	Keya Paha	603.122	603.193	0.070	NE103	Valentine fine sand, rolling	0.070	0.070	0.000	0.000	0.000	0.070	0.000	0.000	0.070
Steele City	NE	Keya Paha	603.193	603.385	0.192	NE103	Dunday loamy fine sand, 0 to 3 percent slopes	0.190	0.000	0.000	0.000	0.002	0.192	0.000	0.000	0.190
Steele City	NE	Keya Paha	603.385	603.589	0.204	NE103	Valentine fine sand, rolling	0.204	0.204	0.000	0.000	0.000	0.204	0.000	0.000	0.204
Steele City	NE	Keya	603.589	603.659	0.070	NE103	Dunday loamy fine sand, 0 to 3 percent slopes	0.069	0.000	0.000	0.000	0.001	0.070	0.000	0.000	0.069

Appendix K – Soils by Milepost – Steele City Segment

Pipeline Segment	State	County	Beginning Milepost	Ending Milepost	Miles	Soil Series	Soil Series Name	Wind (miles)	Water (miles)	Low revegetation on Potential (miles)	Prime Farmland (miles)	Hydric Soils (miles)	Compaction on Prone (miles)	Stoney – Rocky (miles)	Shallow Bedrock (miles)	Droghty (miles)
		Paha														
Steele City	NE	Keya Paha	603.659	604.538	0.879	NE103	Valentine fine sand, rolling	0.879	0.879	0.000	0.000	0.000	0.879	0.000	0.000	0.879
Steele City	NE	Keya Paha	604.538	604.900	0.362	NE103	Valentine fine sand, hilly	0.362	0.362	0.000	0.000	0.000	0.362	0.000	0.000	0.362
Steele City	NE	Keya Paha	604.900	605.176	0.276	NE103	Valentine fine sand, rolling	0.276	0.276	0.000	0.000	0.000	0.276	0.000	0.000	0.276
Steele City	NE	Keya Paha	605.176	605.311	0.135	NE103	Valentine fine sand, hilly	0.135	0.135	0.000	0.000	0.000	0.135	0.000	0.000	0.135
Steele City	NE	Keya Paha	605.311	605.532	0.221	NE103	Valentine fine sand, rolling	0.221	0.221	0.000	0.000	0.000	0.221	0.000	0.000	0.221
Steele City	NE	Keya Paha	605.532	605.587	0.055	NE103	Elsmere loamy fine sand, 0 to 2 percent slopes	0.052	0.000	0.000	0.000	0.003	0.055	0.000	0.000	0.000
Steele City	NE	Keya Paha	605.587	605.916	0.329	NE103	Valentine fine sand, rolling	0.329	0.329	0.000	0.000	0.000	0.329	0.000	0.000	0.329
Steele City	NE	Keya Paha	605.916	606.084	0.168	NE103	Loup fine sandy loam, 0 to 2 percent slopes	0.000	0.000	0.000	0.000	0.168	0.168	0.000	0.000	0.000
Steele City	NE	Keya Paha	606.084	606.738	0.654	NE103	Valentine fine sand, rolling	0.654	0.654	0.000	0.000	0.000	0.654	0.000	0.000	0.654
Steele City	NE	Keya Paha	606.738	606.754	0.017	NE103	Els fine sand, 0 to 2 percent slopes	0.016	0.000	0.000	0.000	0.001	0.017	0.000	0.000	0.000
Steele City	NE	Keya Paha	606.754	606.792	0.038	NE103	Valentine fine sand, rolling	0.038	0.038	0.000	0.000	0.000	0.038	0.000	0.000	0.038
Steele City	NE	Keya Paha	606.792	606.830	0.039	NE103	Els fine sand, 0 to 2 percent slopes	0.037	0.000	0.000	0.000	0.002	0.039	0.000	0.000	0.000
Steele City	NE	Keya Paha	606.830	606.935	0.105	NE103	Valentine fine sand, rolling	0.105	0.105	0.000	0.000	0.000	0.105	0.000	0.000	0.105
Steele City	NE	Keya Paha	606.935	607.019	0.084	NE103	Elsmere loamy fine sand, 0 to 2 percent slopes	0.080	0.000	0.000	0.000	0.004	0.084	0.000	0.000	0.000
Steele City	NE	Keya Paha	607.019	607.078	0.059	NE103	Valentine fine sand, rolling	0.059	0.059	0.000	0.000	0.000	0.059	0.000	0.000	0.059
Steele City	NE	Keya Paha	607.078	607.525	0.446	NE103	Loup fine sandy loam, 0 to 2 percent slopes	0.000	0.000	0.000	0.000	0.446	0.446	0.000	0.000	0.000
Steele City	NE	Keya Paha	607.525	607.552	0.028	NE103	Elsmere loamy fine sand, 0 to 2 percent slopes	0.026	0.000	0.000	0.000	0.001	0.028	0.000	0.000	0.000
Steele City	NE	Keya Paha	607.552	607.634	0.082	NE103	Loup fine sandy loam, 0 to 2 percent slopes	0.000	0.000	0.000	0.000	0.082	0.082	0.000	0.000	0.000
Steele City	NE	Keya Paha	607.634	607.688	0.054	NE103	Elsmere loamy fine sand, 0 to 2 percent slopes	0.051	0.000	0.000	0.000	0.003	0.054	0.000	0.000	0.000
Steele City	NE	Keya Paha	607.688	607.740	0.053	NE103	Loup fine sandy loam, 0 to 2 percent slopes	0.000	0.000	0.000	0.000	0.053	0.053	0.000	0.000	0.000
Steele City	NE	Keya Paha	607.740	607.769	0.029	NE103	Elsmere loamy fine sand, 0 to 2 percent slopes	0.027	0.000	0.000	0.000	0.001	0.029	0.000	0.000	0.000
Steele City	NE	Keya Paha	607.769	607.872	0.103	NE103	Loup fine sandy loam, 0 to 2 percent slopes	0.000	0.000	0.000	0.000	0.103	0.103	0.000	0.000	0.000
Steele City	NE	Keya	607.872	607.976	0.104	NE103	Elsmere loamy fine sand, 0 to 2 percent slopes	0.099	0.000	0.000	0.000	0.005	0.104	0.000	0.000	0.000

Appendix K – Soils by Milepost – Steele City Segment

Pipeline Segment	State	County	Beginning Milepost	Ending Milepost	Miles	Soil Series	Soil Series Name	Wind (miles)	Water (miles)	Low revegetation on Potential (miles)	Prime Farmland (miles)	Hydric Soils (miles)	Compaction on Prone (miles)	Stoney – Rocky (miles)	Shallow Bedrock (miles)	Droghty (miles)
		Paha														
Steele City	NE	Keya Paha	607.976	608.076	0.100	NE103	Simeon-Manter-Ronson complex, 6 to 17 percent slopes	0.158	0.099	0.000	0.000	0.001	0.100	0.000	0.000	0.099
Steele City	NE	Keya Paha	608.076	608.253	0.177	NE103	Valentine fine sand, rolling	0.177	0.177	0.000	0.000	0.000	0.177	0.000	0.000	0.177
Steele City	NE	Keya Paha	608.253	608.337	0.084	NE103	Dunday-Duda loamy fine sands, 0 to 3 percent slopes	0.083	0.000	0.000	0.000	0.001	0.084	0.000	0.000	0.083
Steele City	NE	Keya Paha	608.337	608.568	0.230	NE103	Valentine fine sand, rolling	0.230	0.230	0.000	0.000	0.000	0.230	0.000	0.000	0.230
Steele City	NE	Keya Paha	608.568	608.602	0.034	NE103	Els fine sand, 0 to 2 percent slopes	0.033	0.000	0.000	0.000	0.002	0.034	0.000	0.000	0.000
Steele City	NE	Keya Paha	608.602	608.640	0.038	NE103	Valentine fine sand, rolling	0.038	0.038	0.000	0.000	0.000	0.038	0.000	0.000	0.038
Steele City	NE	Keya Paha	608.640	609.013	0.373	NE103	Els fine sand, 0 to 2 percent slopes	0.355	0.000	0.000	0.000	0.019	0.373	0.000	0.000	0.000
Steele City	NE	Keya Paha	609.013	609.185	0.173	NE103	Valentine fine sand, rolling	0.173	0.173	0.000	0.000	0.000	0.173	0.000	0.000	0.173
Steele City	NE	Keya Paha	609.185	609.445	0.260	NE103	Simeon-Manter-Ronson complex, 6 to 17 percent slopes	0.410	0.257	0.000	0.000	0.003	0.260	0.000	0.000	0.257
Steele City	NE	Keya Paha	609.445	609.576	0.131	NE103	Valentine fine sand, rolling	0.131	0.131	0.000	0.000	0.000	0.131	0.000	0.000	0.131
Steele City	NE	Keya Paha	609.576	609.594	0.019	NE103	Simeon-Manter-Ronson complex, 6 to 17 percent slopes	0.029	0.018	0.000	0.000	0.000	0.019	0.000	0.000	0.018
Steele City	NE	Keya Paha	609.594	609.632	0.038	NE103	Ipage loamy fine sand, 0 to 3 percent slopes	0.038	0.000	0.000	0.000	0.001	0.038	0.000	0.000	0.038
Steele City	NE	Keya Paha	609.632	609.830	0.197	NE103	Simeon-Manter-Ronson complex, 6 to 17 percent slopes	0.312	0.195	0.000	0.000	0.002	0.197	0.000	0.000	0.195
Steele City	NE	Keya Paha	609.830	609.872	0.042	NE103	Valentine fine sand, rolling	0.042	0.042	0.000	0.000	0.000	0.042	0.000	0.000	0.042
Steele City	NE	Keya Paha	609.872	609.908	0.036	NE103	Els fine sand, 0 to 2 percent slopes	0.034	0.000	0.000	0.000	0.002	0.036	0.000	0.000	0.000
Steele City	NE	Keya Paha	609.908	609.981	0.073	NE103	Valentine fine sand, rolling	0.073	0.073	0.000	0.000	0.000	0.073	0.000	0.000	0.073
Steele City	NE	Keya Paha	609.981	610.055	0.074	NE103	Loup fine sandy loam, 0 to 2 percent slopes	0.000	0.000	0.000	0.000	0.074	0.074	0.000	0.000	0.000
Steele City	NE	Keya Paha	610.055	610.180	0.126	NE103	Elsmere loamy fine sand, 0 to 2 percent slopes	0.120	0.000	0.000	0.000	0.006	0.126	0.000	0.000	0.000
Steele City	NE	Keya Paha	610.180	610.282	0.102	NE103	Valentine fine sand, rolling	0.102	0.102	0.000	0.000	0.000	0.102	0.000	0.000	0.102
Steele City	NE	Keya Paha	610.282	610.651	0.369	NE103	Ipage loamy fine sand, 0 to 3 percent slopes	0.362	0.000	0.000	0.000	0.007	0.369	0.000	0.000	0.362
Steele City	NE	Keya Paha	610.651	610.679	0.028	NE103	Simeon-Manter-Ronson complex, 6 to 17 percent slopes	0.044	0.027	0.000	0.000	0.000	0.028	0.000	0.000	0.027
Steele City	NE	Keya Paha	610.679	610.893	0.214	NE103	Ipage loamy fine sand, 0 to 3 percent slopes	0.210	0.000	0.000	0.000	0.004	0.214	0.000	0.000	0.210
Steele City	NE	Keya	610.893	611.042	0.149	NE103	Valentine fine sand, rolling	0.149	0.149	0.000	0.000	0.000	0.149	0.000	0.000	0.149

Appendix K – Soils by Milepost – Steele City Segment

Pipeline Segment	State	County	Beginning Milepost	Ending Milepost	Miles	Soil Series	Soil Series Name	Wind (miles)	Water (miles)	Low revegetation on Potential (miles)	Prime Farmland (miles)	Hydric Soils (miles)	Compaction on Prone (miles)	Stoney – Rocky (miles)	Shallow Bedrock (miles)	Droghty (miles)
		Paha														
Steele City	NE	Keya Paha	611.042	611.129	0.087	NE103	Ipage loamy fine sand, 0 to 3 percent slopes	0.085	0.000	0.000	0.000	0.002	0.087	0.000	0.000	0.085
Steele City	NE	Keya Paha	611.129	611.511	0.382	NE103	Simeon-Manter-Ronson complex, 6 to 17 percent slopes	0.603	0.378	0.000	0.000	0.004	0.382	0.000	0.000	0.378
Steele City	NE	Keya Paha	611.511	611.533	0.022	NE103	Valentine fine sand, rolling	0.022	0.022	0.000	0.000	0.000	0.022	0.000	0.000	0.022
Steele City	NE	Keya Paha	611.533	611.595	0.062	NE103	Ipage loamy fine sand, 0 to 3 percent slopes	0.061	0.000	0.000	0.000	0.001	0.062	0.000	0.000	0.061
Steele City	NE	Keya Paha	611.595	611.638	0.043	NE103	Valentine fine sand, rolling	0.043	0.043	0.000	0.000	0.000	0.043	0.000	0.000	0.043
Steele City	NE	Keya Paha	611.638	611.740	0.103	NE103	Valentine loamy fine sand, gently rolling	0.101	0.000	0.000	0.000	0.001	0.103	0.000	0.000	0.101
Steele City	NE	Keya Paha	611.740	611.941	0.201	NE103	Valentine fine sand, rolling	0.201	0.201	0.000	0.000	0.000	0.201	0.000	0.000	0.201
Steele City	NE	Keya Paha	611.941	612.232	0.291	NE103	Els fine sand, 0 to 2 percent slopes	0.277	0.000	0.000	0.000	0.015	0.291	0.000	0.000	0.000
Steele City	NE	Keya Paha	612.232	612.463	0.230	NE103	Valentine fine sand, rolling	0.230	0.230	0.000	0.000	0.000	0.230	0.000	0.000	0.230
Steele City	NE	Keya Paha	612.463	612.467	0.005	NE103	Els fine sand, 0 to 2 percent slopes	0.004	0.000	0.000	0.000	0.000	0.005	0.000	0.000	0.000
Steele City	NE	Keya Paha	612.467	612.503	0.035	NE103	Valentine fine sand, rolling	0.035	0.035	0.000	0.000	0.000	0.035	0.000	0.000	0.035
Steele City	NE	Keya Paha	612.503	612.623	0.120	NE103	Els fine sand, 0 to 2 percent slopes	0.114	0.000	0.000	0.000	0.006	0.120	0.000	0.000	0.000
Steele City	NE	Keya Paha	612.623	612.697	0.075	NE103	Elsmere loamy fine sand, 0 to 2 percent slopes	0.071	0.000	0.000	0.000	0.004	0.075	0.000	0.000	0.000
Steele City	NE	Keya Paha	612.697	612.829	0.132	NE103	Valentine-Wewela loamy fine sands, 3 to 6 percent slopes	0.131	0.000	0.000	0.000	0.001	0.132	0.040	0.000	0.131
Steele City	NE	Keya Paha	612.829	612.952	0.123	NE103	Labu-Sansarc silty clays, 11 to 30 percent slopes	0.000	0.120	0.000	0.000	0.002	0.123	0.000	0.000	0.000
Steele City	NE	Keya Paha	612.952	613.047	0.095	NE103	Ronson-Anselmo fine sandy loams, 6 to 9 percent slopes	0.000	0.000	0.000	0.000	0.000	0.095	0.000	0.000	0.000
Steele City	NE	Keya Paha	613.047	613.104	0.057	NE103	Valentine-Wewela loamy fine sands, 6 to 30 percent slopes	0.073	0.056	0.000	0.000	0.001	0.057	0.017	0.000	0.056
Steele City	NE	Keya Paha	613.104	613.140	0.036	NE103	Ronson-Anselmo fine sandy loams, 6 to 9 percent slopes	0.000	0.000	0.000	0.000	0.000	0.036	0.000	0.000	0.000
Steele City	NE	Keya Paha	613.140	613.370	0.230	NE103	Vetal loam, 0 to 1 percent slopes	0.000	0.000	0.000	0.000	0.002	0.230	0.000	0.000	0.228
Steele City	NE	Keya Paha	613.370	613.379	0.009	NE103	Ronson-Anselmo fine sandy loams, 6 to 9 percent slopes	0.000	0.000	0.000	0.000	0.000	0.009	0.000	0.000	0.000
Steele City	NE	Keya Paha	613.379	613.458	0.079	NE103	Boel fine sandy loam, 0 to 2 percent slopes	0.006	0.000	0.000	0.000	0.006	0.079	0.012	0.000	0.006
Steele City	NE	Keya Paha	613.458	613.634	0.176	NE103	Barney fine sandy loam, 0 to 2 percent slopes	0.000	0.000	0.000	0.000	0.176	0.176	0.000	0.000	0.000
Steele City	NE	Keya	613.634	613.739	0.105	NE103	Water	0.000	0.000	0.000	0.000	0.000	0.105	0.000	0.000	0.000

Appendix K – Soils by Milepost – Steele City Segment

Pipeline Segment	State	County	Beginning Milepost	Ending Milepost	Miles	Soil Series	Soil Series Name	Wind (miles)	Water (miles)	Low revegetation on Potential (miles)	Prime Farmland (miles)	Hydric Soils (miles)	Compaction on Prone (miles)	Stoney – Rocky (miles)	Shallow Bedrock (miles)	Droghty (miles)
		Paha														
Steele City	NE	Rock	613.739	613.846	0.107	NE149	Water	0.000	0.000	0.000	0.000	0.000	0.107	0.000	0.000	0.000
Steele City	NE	Rock	613.846	613.950	0.104	NE149	Labu-Sansarc silty clays, 11 to 40 percent slopes	0.000	0.103	0.000	0.000	0.001	0.104	0.000	0.000	0.000
Steele City	NE	Rock	613.950	614.337	0.387	NE149	O'Neill sandy loam, 0 to 2 percent slopes	0.000	0.000	0.000	0.000	0.004	0.387	0.384	0.000	0.384
Steele City	NE	Rock	614.337	614.615	0.277	NE149	Valentine fine sand, 0 to 3 percent slopes	0.272	0.000	0.000	0.000	0.006	0.277	0.000	0.000	0.272
Steele City	NE	Rock	614.615	614.920	0.306	NE149	Simeon-Valentine sands, 9 to 60 percent slopes, eroded	0.302	0.302	0.000	0.000	0.003	0.306	0.000	0.000	0.302
Steele City	NE	Rock	614.920	614.931	0.011	NE149	Simeon loamy sand, 0 to 3 percent slopes	0.010	0.000	0.000	0.000	0.000	0.011	0.000	0.000	0.010
Steele City	NE	Rock	614.931	615.149	0.218	NE149	Simeon-Valentine sands, 9 to 60 percent slopes, eroded	0.216	0.216	0.000	0.000	0.002	0.218	0.000	0.000	0.216
Steele City	NE	Rock	615.149	616.079	0.930	NE149	Simeon loamy sand, 0 to 3 percent slopes	0.920	0.000	0.000	0.000	0.009	0.930	0.000	0.000	0.920
Steele City	NE	Rock	616.079	616.148	0.070	NE149	Valentine fine sand, 0 to 3 percent slopes	0.068	0.000	0.000	0.000	0.001	0.070	0.000	0.000	0.068
Steele City	NE	Rock	616.148	616.301	0.153	NE149	Wewela fine sandy loam, 2 to 6 percent slopes	0.000	0.000	0.000	0.000	0.000	0.153	0.000	0.000	0.000
Steele City	NE	Rock	616.301	616.508	0.207	NE149	Valentine fine sand, 0 to 3 percent slopes	0.203	0.000	0.000	0.000	0.004	0.207	0.000	0.000	0.203
Steele City	NE	Rock	616.508	616.971	0.462	NE149	Valentine fine sand, 3 to 9 percent slopes	0.453	0.000	0.000	0.000	0.009	0.462	0.000	0.000	0.453
Steele City	NE	Rock	616.971	617.562	0.592	NE149	Valentine fine sand, rolling	0.580	0.580	0.000	0.000	0.012	0.592	0.000	0.000	0.580
Steele City	NE	Rock	617.562	617.759	0.196	NE149	Els-Ipage complex, 0 to 3 percent slopes	0.177	0.000	0.000	0.000	0.020	0.196	0.000	0.000	0.059
Steele City	NE	Rock	617.759	618.151	0.393	NE149	Valentine fine sand, rolling	0.385	0.385	0.000	0.000	0.008	0.393	0.000	0.000	0.385
Steele City	NE	Rock	618.151	618.380	0.229	NE149	Valentine fine sand, 3 to 9 percent slopes	0.225	0.000	0.000	0.000	0.005	0.229	0.000	0.000	0.225
Steele City	NE	Rock	618.380	618.518	0.137	NE149	Simeon-Meadin complex, 0 to 9 percent slopes	0.075	0.000	0.000	0.000	0.001	0.137	0.060	0.000	0.136
Steele City	NE	Rock	618.518	618.666	0.148	NE149	Meadin sandy loam, 0 to 3 percent slopes	0.000	0.000	0.000	0.000	0.000	0.148	0.148	0.000	0.148
Steele City	NE	Rock	618.666	618.831	0.165	NE149	Simeon-Meadin complex, 0 to 9 percent slopes	0.091	0.000	0.000	0.000	0.002	0.165	0.073	0.000	0.164
Steele City	NE	Rock	618.831	619.016	0.185	NE149	Valentine fine sand, rolling	0.181	0.181	0.000	0.000	0.004	0.185	0.000	0.000	0.181
Steele City	NE	Rock	619.016	619.171	0.155	NE149	Simeon-Meadin complex, 0 to 9 percent slopes	0.085	0.000	0.000	0.000	0.002	0.155	0.068	0.000	0.153
Steele City	NE	Rock	619.171	619.387	0.216	NE149	Meadin sandy loam, 0 to 3 percent slopes	0.000	0.000	0.000	0.000	0.000	0.216	0.216	0.000	0.216
Steele City	NE	Rock	619.387	619.733	0.346	NE149	Simeon-Meadin complex, 0 to 9 percent slopes	0.190	0.000	0.000	0.000	0.003	0.346	0.152	0.000	0.343
Steele City	NE	Rock	619.733	619.917	0.185	NE149	O'Neill sandy loam, 2 to 6 percent slopes	0.000	0.000	0.000	0.000	0.000	0.185	0.185	0.000	0.185
Steele City	NE	Rock	619.917	620.143	0.226	NE149	Meadin sandy loam, 0 to 3 percent slopes	0.000	0.000	0.000	0.000	0.000	0.226	0.226	0.000	0.226
Steele City	NE	Rock	620.143	620.342	0.199	NE149	Simeon-Meadin complex, 0 to 9 percent slopes	0.109	0.000	0.000	0.000	0.002	0.199	0.087	0.000	0.197
Steele City	NE	Rock	620.342	621.113	0.771	NE149	Elsmere loamy fine sand, 0 to 2 percent slopes	0.694	0.000	0.000	0.000	0.077	0.771	0.000	0.000	0.000
Steele City	NE	Rock	621.113	622.081	0.969	NE149	Pivot loamy sand, 0 to 3 percent slopes	0.959	0.000	0.000	0.000	0.010	0.969	0.000	0.000	0.959
Steele City	NE	Rock	622.081	622.145	0.064	NE149	Ipage loamy sand, 0 to 3 percent slopes	0.062	0.000	0.000	0.000	0.002	0.064	0.000	0.000	0.062
Steele City	NE	Rock	622.145	622.573	0.428	NE149	Elsmere loamy fine sand, 0 to 2 percent slopes	0.385	0.000	0.000	0.000	0.043	0.428	0.000	0.000	0.000
Steele City	NE	Rock	622.573	622.726	0.153	NE149	Loup fine sandy loam, 0 to 2 percent slopes	0.000	0.000	0.000	0.000	0.153	0.153	0.000	0.000	0.000
Steele City	NE	Rock	622.726	622.808	0.082	NE149	Elsmere loamy fine sand, 0 to 2 percent slopes	0.074	0.000	0.000	0.000	0.008	0.082	0.000	0.000	0.000
Steele City	NE	Rock	622.808	622.869	0.062	NE149	Marlake loamy fine sand, 0 to 1 percent slopes	0.000	0.000	0.000	0.000	0.062	0.062	0.000	0.000	0.000
Steele City	NE	Rock	622.869	622.929	0.059	NE149	Elsmere loamy fine sand, 0 to 2 percent slopes	0.053	0.000	0.000	0.000	0.006	0.059	0.000	0.000	0.000
Steele City	NE	Rock	622.929	623.218	0.289	NE149	Loup fine sandy loam, 0 to 2 percent slopes	0.000	0.000	0.000	0.000	0.289	0.289	0.000	0.000	0.000
Steele City	NE	Holt	623.218	623.456	0.238	NE089	Loup fine sandy loam, 0 to 2 percent slopes	0.000	0.000	0.000	0.000	0.238	0.238	0.000	0.000	0.000
Steele City	NE	Holt	623.456	623.697	0.241	NE089	Elsmere loamy fine sand, 0 to 2 percent slopes	0.236	0.000	0.000	0.000	0.005	0.241	0.000	0.000	0.000
Steele City	NE	Holt	623.697	623.789	0.092	NE089	Loup fine sandy loam, wet, 0 to 2 percent slopes	0.000	0.000	0.000	0.000	0.092	0.092	0.000	0.000	0.000
Steele City	NE	Holt	623.789	623.945	0.156	NE089	Elsmere loamy fine sand, 0 to 2 percent slopes	0.153	0.000	0.000	0.000	0.003	0.156	0.000	0.000	0.000
Steele City	NE	Holt	623.945	623.994	0.049	NE089	Loup fine sandy loam, 0 to 2 percent slopes	0.000	0.000	0.000	0.000	0.049	0.049	0.000	0.000	0.000
Steele City	NE	Holt	623.994	624.367	0.373	NE089	Valentine fine sand, 3 to 9 percent slopes	0.355	0.000	0.000	0.000	0.019	0.373	0.000	0.000	0.355
Steele City	NE	Holt	624.367	624.640	0.272	NE089	Valentine fine sand, 0 to 3 percent slopes	0.259	0.000	0.000	0.000	0.014	0.272	0.000	0.000	0.259

Appendix K – Soils by Milepost – Steele City Segment

Pipeline Segment	State	County	Beginning Milepost	Ending Milepost	Miles	Soil Series	Soil Series Name	Wind (miles)	Water (miles)	Low revegetation on Potential (miles)	Prime Farmland (miles)	Hydric Soils (miles)	Compaction on Prone (miles)	Stoney – Rocky (miles)	Shallow Bedrock (miles)	Droghty (miles)
Steele City	NE	Holt	624.640	624.941	0.301	NE089	Valentine fine sand, 3 to 9 percent slopes	0.286	0.000	0.000	0.000	0.015	0.301	0.000	0.000	0.286
Steele City	NE	Holt	624.941	625.056	0.115	NE089	Boelus loamy sand, 0 to 3 percent slopes	0.114	0.000	0.000	0.000	0.001	0.115	0.000	0.000	0.114
Steele City	NE	Holt	625.056	625.101	0.045	NE089	Valentine fine sand, 3 to 9 percent slopes	0.043	0.000	0.000	0.000	0.002	0.045	0.000	0.000	0.043
Steele City	NE	Holt	625.101	625.153	0.052	NE089	Boelus loamy sand, 0 to 3 percent slopes	0.052	0.000	0.000	0.000	0.001	0.052	0.000	0.000	0.052
Steele City	NE	Holt	625.153	625.156	0.003	NE089	Valentine fine sand, 3 to 9 percent slopes	0.003	0.000	0.000	0.000	0.000	0.003	0.000	0.000	0.003
Steele City	NE	Holt	625.156	625.221	0.064	NE089	Valentine fine sand, 0 to 3 percent slopes	0.061	0.000	0.000	0.000	0.003	0.064	0.000	0.000	0.061
Steele City	NE	Holt	625.221	625.252	0.031	NE089	Boelus loamy sand, 0 to 3 percent slopes	0.031	0.000	0.000	0.000	0.000	0.031	0.000	0.000	0.031
Steele City	NE	Holt	625.252	625.410	0.159	NE089	Valentine fine sand, 0 to 3 percent slopes	0.151	0.000	0.000	0.000	0.008	0.159	0.000	0.000	0.151
Steele City	NE	Holt	625.410	625.509	0.098	NE089	Boelus loamy sand, 0 to 3 percent slopes	0.097	0.000	0.000	0.000	0.001	0.098	0.000	0.000	0.097
Steele City	NE	Holt	625.509	625.588	0.080	NE089	Valentine fine sand, 0 to 3 percent slopes	0.076	0.000	0.000	0.000	0.004	0.080	0.000	0.000	0.076
Steele City	NE	Holt	625.588	626.029	0.441	NE089	Boelus loamy sand, 0 to 3 percent slopes	0.437	0.000	0.000	0.000	0.004	0.441	0.000	0.000	0.437
Steele City	NE	Holt	626.029	626.768	0.739	NE089	Valentine fine sand, 0 to 3 percent slopes	0.702	0.000	0.000	0.000	0.037	0.739	0.000	0.000	0.702
Steele City	NE	Holt	626.768	626.880	0.112	NE089	Elsmere loamy fine sand, 0 to 2 percent slopes	0.110	0.000	0.000	0.000	0.002	0.112	0.000	0.000	0.000
Steele City	NE	Holt	626.880	626.977	0.097	NE089	Elsmere-Selia loamy fine sands, 0 to 2 percent slopes	0.095	0.000	0.037	0.000	0.002	0.097	0.000	0.000	0.000
Steele City	NE	Holt	626.977	627.000	0.023	NE089	Barney-Boel-Calamus complex, channeled	0.008	0.000	0.000	0.000	0.015	0.023	0.018	0.000	0.004
Steele City	NE	Holt	627.000	627.093	0.094	NE089	Elsmere-Selia loamy fine sands, 0 to 2 percent slopes	0.092	0.000	0.036	0.000	0.002	0.094	0.000	0.000	0.000
Steele City	NE	Holt	627.093	627.130	0.036	NE089	Barney-Boel-Calamus complex, channeled	0.013	0.000	0.000	0.000	0.023	0.036	0.029	0.000	0.007
Steele City	NE	Holt	627.130	627.317	0.187	NE089	Elsmere-Ipage loamy fine sands, 0 to 3 percent slopes	0.183	0.000	0.000	0.000	0.004	0.187	0.000	0.000	0.080
Steele City	NE	Holt	627.317	627.516	0.199	NE089	Elsmere-Selia loamy fine sands, 0 to 2 percent slopes	0.195	0.000	0.076	0.000	0.004	0.199	0.000	0.000	0.000
Steele City	NE	Holt	627.516	627.580	0.065	NE089	Ipage loamy sand, 0 to 3 percent slopes	0.063	0.000	0.000	0.000	0.001	0.065	0.000	0.000	0.063
Steele City	NE	Holt	627.580	627.672	0.092	NE089	Gannett loam, 0 to 2 percent slopes	0.000	0.000	0.000	0.000	0.092	0.092	0.000	0.000	0.000
Steele City	NE	Holt	627.672	627.756	0.084	NE089	Marlake fine sandy loam, 0 to 2 percent slopes	0.000	0.000	0.000	0.000	0.084	0.084	0.000	0.000	0.000
Steele City	NE	Holt	627.756	627.839	0.083	NE089	Ord-Lute fine sandy loams, 0 to 2 percent slopes	0.000	0.000	0.033	0.000	0.002	0.083	0.000	0.000	0.000
Steele City	NE	Holt	627.839	628.057	0.219	NE089	Gannett loam, 0 to 2 percent slopes	0.000	0.000	0.000	0.000	0.219	0.219	0.000	0.000	0.000
Steele City	NE	Holt	628.057	628.114	0.057	NE089	Ord-Lute fine sandy loams, 0 to 2 percent slopes	0.000	0.000	0.023	0.000	0.001	0.057	0.000	0.000	0.000
Steele City	NE	Holt	628.114	628.251	0.137	NE089	Elsmere-Selia loamy fine sands, 0 to 2 percent slopes	0.135	0.000	0.052	0.000	0.003	0.137	0.000	0.000	0.000
Steele City	NE	Holt	628.251	628.316	0.064	NE089	Ipage loamy sand, 0 to 3 percent slopes	0.063	0.000	0.000	0.000	0.001	0.064	0.000	0.000	0.063
Steele City	NE	Holt	628.316	628.406	0.090	NE089	Barney-Boel-Calamus complex, channeled	0.033	0.000	0.000	0.000	0.058	0.090	0.073	0.000	0.016
Steele City	NE	Holt	628.406	628.469	0.063	NE089	Ipage loamy sand, 0 to 3 percent slopes	0.062	0.000	0.000	0.000	0.001	0.063	0.000	0.000	0.062
Steele City	NE	Holt	628.469	628.524	0.055	NE089	Elsmere-Selia loamy fine sands, 0 to 2 percent slopes	0.054	0.000	0.021	0.000	0.001	0.055	0.000	0.000	0.000
Steele City	NE	Holt	628.524	628.556	0.032	NE089	Ipage loamy sand, 0 to 3 percent slopes	0.031	0.000	0.000	0.000	0.001	0.032	0.000	0.000	0.031
Steele City	NE	Holt	628.556	628.633	0.077	NE089	Ord loam, 0 to 2 percent slopes	0.000	0.000	0.000	0.000	0.004	0.077	0.000	0.000	0.000
Steele City	NE	Holt	628.633	628.670	0.037	NE089	Barney-Boel-Calamus complex, channeled	0.013	0.000	0.000	0.000	0.024	0.037	0.030	0.000	0.007
Steele City	NE	Holt	628.670	628.739	0.069	NE089	Loup fine sandy loam, 0 to 2 percent slopes	0.000	0.000	0.000	0.000	0.069	0.069	0.000	0.000	0.000
Steele City	NE	Holt	628.739	628.807	0.068	NE089	Ord-Lute fine sandy loams, 0 to 2 percent slopes	0.000	0.000	0.027	0.000	0.001	0.068	0.000	0.000	0.000
Steele City	NE	Holt	628.807	628.882	0.075	NE089	Loup fine sandy loam, 0 to 2 percent slopes	0.000	0.000	0.000	0.000	0.075	0.075	0.000	0.000	0.000
Steele City	NE	Holt	628.882	628.932	0.050	NE089	Barney-Boel-Calamus complex, channeled	0.018	0.000	0.000	0.000	0.032	0.050	0.040	0.000	0.009
Steele City	NE	Holt	628.932	628.968	0.036	NE089	Loup fine sandy loam, 0 to 2 percent slopes	0.000	0.000	0.000	0.000	0.036	0.036	0.000	0.000	0.000
Steele City	NE	Holt	628.968	629.158	0.190	NE089	Ord-Lute fine sandy loams, 0 to 2 percent slopes	0.000	0.000	0.076	0.000	0.004	0.190	0.000	0.000	0.000

Appendix K – Soils by Milepost – Steele City Segment

Pipeline Segment	State	County	Beginning Milepost	Ending Milepost	Miles	Soil Series	Soil Series Name	Wind (miles)	Water (miles)	Low revegetation on Potential (miles)	Prime Farmland (miles)	Hydric Soils (miles)	Compaction on Prone (miles)	Stoney – Rocky (miles)	Shallow Bedrock (miles)	Droghty (miles)
Steele City	NE	Holt	629.158	629.240	0.082	NE089	Loup fine sandy loam, 0 to 2 percent slopes	0.000	0.000	0.000	0.000	0.082	0.082	0.000	0.000	0.000
Steele City	NE	Holt	629.240	629.261	0.021	NE089	Ord-Lute fine sandy loams, 0 to 2 percent slopes	0.000	0.000	0.008	0.000	0.000	0.021	0.000	0.000	0.000
Steele City	NE	Holt	629.261	629.480	0.219	NE089	Loup fine sandy loam, 0 to 2 percent slopes	0.000	0.000	0.000	0.000	0.219	0.219	0.000	0.000	0.000
Steele City	NE	Holt	629.480	629.802	0.322	NE089	Ord-Lute fine sandy loams, 0 to 2 percent slopes	0.000	0.000	0.129	0.000	0.006	0.322	0.000	0.000	0.000
Steele City	NE	Holt	629.802	629.823	0.021	NE089	Gannett loam, 0 to 2 percent slopes	0.000	0.000	0.000	0.000	0.021	0.021	0.000	0.000	0.000
Steele City	NE	Holt	629.823	629.880	0.057	NE089	Ord-Lute fine sandy loams, 0 to 2 percent slopes	0.000	0.000	0.023	0.000	0.001	0.057	0.000	0.000	0.000
Steele City	NE	Holt	629.880	629.941	0.061	NE089	Gannett loam, 0 to 2 percent slopes	0.000	0.000	0.000	0.000	0.061	0.061	0.000	0.000	0.000
Steele City	NE	Holt	629.941	630.047	0.106	NE089	Ord-Lute fine sandy loams, 0 to 2 percent slopes	0.000	0.000	0.042	0.000	0.002	0.106	0.000	0.000	0.000
Steele City	NE	Holt	630.047	630.149	0.102	NE089	Elsmere-Ipage loamy fine sands, 0 to 3 percent slopes	0.099	0.000	0.000	0.000	0.002	0.102	0.000	0.000	0.044
Steele City	NE	Holt	630.149	630.183	0.034	NE089	Ord-Lute fine sandy loams, 0 to 2 percent slopes	0.000	0.000	0.014	0.000	0.001	0.034	0.000	0.000	0.000
Steele City	NE	Holt	630.183	630.214	0.032	NE089	Elsmere-Ipage loamy fine sands, 0 to 3 percent slopes	0.031	0.000	0.000	0.000	0.001	0.032	0.000	0.000	0.014
Steele City	NE	Holt	630.214	630.317	0.102	NE089	Ord-Lute fine sandy loams, 0 to 2 percent slopes	0.000	0.000	0.041	0.000	0.002	0.102	0.000	0.000	0.000
Steele City	NE	Holt	630.317	630.422	0.105	NE089	Elsmere-Ipage loamy fine sands, 0 to 3 percent slopes	0.103	0.000	0.000	0.000	0.002	0.105	0.000	0.000	0.045
Steele City	NE	Holt	630.422	630.535	0.113	NE089	Ord-Lute fine sandy loams, 0 to 2 percent slopes	0.000	0.000	0.045	0.000	0.002	0.113	0.000	0.000	0.000
Steele City	NE	Holt	630.535	630.562	0.027	NE089	Elsmere-Ipage loamy fine sands, 0 to 3 percent slopes	0.027	0.000	0.000	0.000	0.001	0.027	0.000	0.000	0.012
Steele City	NE	Holt	630.562	630.630	0.067	NE089	Valentine-Dunday loamy fine sands, 3 to 9 percent slopes	0.067	0.000	0.000	0.000	0.000	0.067	0.000	0.000	0.067
Steele City	NE	Holt	630.630	630.655	0.025	NE089	Libory loamy fine sand, 0 to 3 percent slopes	0.025	0.000	0.000	0.000	0.000	0.025	0.000	0.000	0.025
Steele City	NE	Holt	630.655	630.700	0.045	NE089	Gannett loam, 0 to 2 percent slopes	0.000	0.000	0.000	0.000	0.045	0.045	0.000	0.000	0.000
Steele City	NE	Holt	630.700	630.710	0.010	NE089	Libory loamy fine sand, 0 to 3 percent slopes	0.010	0.000	0.000	0.000	0.000	0.010	0.000	0.000	0.010
Steele City	NE	Holt	630.710	630.759	0.049	NE089	Gannett loam, 0 to 2 percent slopes	0.000	0.000	0.000	0.000	0.049	0.049	0.000	0.000	0.000
Steele City	NE	Holt	630.759	630.789	0.030	NE089	Gannett loam, wet, 0 to 2 percent slopes	0.000	0.000	0.000	0.000	0.030	0.030	0.000	0.000	0.000
Steele City	NE	Holt	630.789	631.762	0.973	NE089	Gannett loam, 0 to 2 percent slopes	0.000	0.000	0.000	0.000	0.973	0.973	0.000	0.000	0.000
Steele City	NE	Holt	631.762	632.038	0.276	NE089	Ord-Lute fine sandy loams, 0 to 2 percent slopes	0.000	0.000	0.110	0.000	0.006	0.276	0.000	0.000	0.000
Steele City	NE	Holt	632.038	632.544	0.506	NE089	Elsmere-Selia loamy fine sands, 0 to 2 percent slopes	0.496	0.000	0.192	0.000	0.010	0.506	0.000	0.000	0.000
Steele City	NE	Holt	632.544	632.589	0.046	NE089	Gannett loam, wet, 0 to 2 percent slopes	0.000	0.000	0.000	0.000	0.046	0.046	0.000	0.000	0.000
Steele City	NE	Holt	632.589	632.641	0.052	NE089	Elsmere-Selia loamy fine sands, 0 to 2 percent slopes	0.051	0.000	0.020	0.000	0.001	0.052	0.000	0.000	0.000
Steele City	NE	Holt	632.641	632.691	0.050	NE089	Gannett loam, 0 to 2 percent slopes	0.000	0.000	0.000	0.000	0.050	0.050	0.000	0.000	0.000
Steele City	NE	Holt	632.691	632.749	0.058	NE089	Elsmere loamy fine sand, 0 to 2 percent slopes	0.057	0.000	0.000	0.000	0.001	0.058	0.000	0.000	0.000
Steele City	NE	Holt	632.749	632.765	0.016	NE089	Gannett loam, 0 to 2 percent slopes	0.000	0.000	0.000	0.000	0.016	0.016	0.000	0.000	0.000
Steele City	NE	Holt	632.765	632.891	0.126	NE089	Elsmere loamy fine sand, 0 to 2 percent slopes	0.123	0.000	0.000	0.000	0.003	0.126	0.000	0.000	0.000
Steele City	NE	Holt	632.891	633.027	0.137	NE089	Gannett loam, 0 to 2 percent slopes	0.000	0.000	0.000	0.000	0.137	0.137	0.000	0.000	0.000
Steele City	NE	Holt	633.027	633.166	0.139	NE089	Elsmere loamy fine sand, 0 to 2 percent slopes	0.136	0.000	0.000	0.000	0.003	0.139	0.000	0.000	0.000
Steele City	NE	Holt	633.166	633.401	0.235	NE089	Gannett loam, wet, 0 to 2 percent slopes	0.000	0.000	0.000	0.000	0.235	0.235	0.000	0.000	0.000
Steele City	NE	Holt	633.401	633.443	0.042	NE089	Elsmere-Ipage loamy fine sands, 0 to 3 percent slopes	0.041	0.000	0.000	0.000	0.001	0.042	0.000	0.000	0.018
Steele City	NE	Holt	633.443	633.543	0.100	NE089	Elsmere fine sandy loam, 0 to 2 percent slopes	0.000	0.000	0.000	0.000	0.005	0.100	0.000	0.000	0.000
Steele City	NE	Holt	633.543	633.623	0.080	NE089	Gannett loam, wet, 0 to 2 percent slopes	0.000	0.000	0.000	0.000	0.080	0.080	0.000	0.000	0.000
Steele City	NE	Holt	633.623	633.972	0.349	NE089	Elsmere-Selia loamy fine sands, 0 to 2 percent	0.342	0.000	0.133	0.000	0.007	0.349	0.000	0.000	0.000

Appendix K – Soils by Milepost – Steele City Segment

Pipeline Segment	State	County	Beginning Milepost	Ending Milepost	Miles	Soil Series	Soil Series Name	Wind (miles)	Water (miles)	Low revegetation on Potential (miles)	Prime Farmland (miles)	Hydric Soils (miles)	Compaction on Prone (miles)	Stoney – Rocky (miles)	Shallow Bedrock (miles)	Droghty (miles)
							slopes									
Steele City	NE	Holt	633.972	634.054	0.082	NE089	Loup fine sandy loam, wet, 0 to 2 percent slopes	0.000	0.000	0.000	0.000	0.082	0.082	0.000	0.000	0.000
Steele City	NE	Holt	634.054	634.522	0.468	NE089	Elsmere-Selia loamy fine sands, 0 to 2 percent slopes	0.458	0.000	0.178	0.000	0.009	0.468	0.000	0.000	0.000
Steele City	NE	Holt	634.522	634.570	0.048	NE089	Barney-Boel-Calamus complex, channeled	0.017	0.000	0.000	0.000	0.031	0.048	0.039	0.000	0.009
Steele City	NE	Holt	634.570	634.607	0.037	NE089	Tryon loamy fine sand, 0 to 2 percent slopes	0.000	0.000	0.000	0.000	0.037	0.037	0.000	0.000	0.000
Steele City	NE	Holt	634.607	634.714	0.107	NE089	Els-Ipage complex, 0 to 3 percent slopes	0.101	0.000	0.000	0.000	0.005	0.107	0.000	0.000	0.043
Steele City	NE	Holt	634.714	634.726	0.012	NE089	Tryon loamy fine sand, wet, 0 to 2 percent slopes	0.000	0.000	0.000	0.000	0.012	0.012	0.000	0.000	0.000
Steele City	NE	Holt	634.726	634.751	0.025	NE089	Els-Ipage complex, 0 to 3 percent slopes	0.024	0.000	0.000	0.000	0.001	0.025	0.000	0.000	0.010
Steele City	NE	Holt	634.751	634.989	0.238	NE089	Ipage loamy sand, 0 to 3 percent slopes	0.233	0.000	0.000	0.000	0.005	0.238	0.000	0.000	0.233
Steele City	NE	Holt	634.989	635.145	0.156	NE089	Els-Ipage complex, 0 to 3 percent slopes	0.148	0.000	0.000	0.000	0.008	0.156	0.000	0.000	0.062
Steele City	NE	Holt	635.145	635.261	0.116	NE089	Valentine fine sand, 3 to 9 percent slopes	0.110	0.000	0.000	0.000	0.006	0.116	0.000	0.000	0.110
Steele City	NE	Holt	635.261	635.325	0.065	NE089	Els-Ipage complex, 0 to 3 percent slopes	0.061	0.000	0.000	0.000	0.003	0.065	0.000	0.000	0.026
Steele City	NE	Holt	635.325	635.380	0.054	NE089	Libory loamy fine sand, 0 to 3 percent slopes	0.054	0.000	0.000	0.000	0.001	0.054	0.000	0.000	0.054
Steele City	NE	Holt	635.380	635.522	0.142	NE089	Els-Ipage complex, 0 to 3 percent slopes	0.135	0.000	0.000	0.000	0.007	0.142	0.000	0.000	0.057
Steele City	NE	Holt	635.522	635.758	0.236	NE089	Els loamy sand, 0 to 2 percent slopes	0.229	0.000	0.000	0.000	0.007	0.236	0.000	0.000	0.000
Steele City	NE	Holt	635.758	636.804	1.046	NE089	Els-Ipage complex, 0 to 3 percent slopes	0.994	0.000	0.000	0.000	0.052	1.046	0.000	0.000	0.418
Steele City	NE	Holt	636.804	636.903	0.098	NE089	Loup fine sandy loam, wet, 0 to 2 percent slopes	0.000	0.000	0.000	0.000	0.098	0.098	0.000	0.000	0.000
Steele City	NE	Holt	636.903	636.947	0.044	NE089	Elsmere-Ipage loamy fine sands, 0 to 3 percent slopes	0.043	0.000	0.000	0.000	0.001	0.044	0.000	0.000	0.019
Steele City	NE	Holt	636.947	637.772	0.826	NE089	Els-Ipage complex, 0 to 3 percent slopes	0.784	0.000	0.000	0.000	0.041	0.826	0.000	0.000	0.330
Steele City	NE	Holt	637.772	637.838	0.066	NE089	Elsmere fine sandy loam, 0 to 2 percent slopes	0.000	0.000	0.000	0.000	0.003	0.066	0.000	0.000	0.000
Steele City	NE	Holt	637.838	637.953	0.115	NE089	Loup fine sandy loam, 0 to 2 percent slopes	0.000	0.000	0.000	0.000	0.115	0.115	0.000	0.000	0.000
Steele City	NE	Holt	637.953	638.076	0.123	NE089	Elsmere fine sandy loam, 0 to 2 percent slopes	0.000	0.000	0.000	0.000	0.006	0.123	0.000	0.000	0.000
Steele City	NE	Holt	638.076	638.157	0.080	NE089	Loup fine sandy loam, 0 to 2 percent slopes	0.000	0.000	0.000	0.000	0.080	0.080	0.000	0.000	0.000
Steele City	NE	Holt	638.157	638.434	0.278	NE089	Elsmere fine sandy loam, 0 to 2 percent slopes	0.000	0.000	0.000	0.000	0.014	0.278	0.000	0.000	0.000
Steele City	NE	Holt	638.434	638.527	0.093	NE089	Loup fine sandy loam, 0 to 2 percent slopes	0.000	0.000	0.000	0.000	0.093	0.093	0.000	0.000	0.000
Steele City	NE	Holt	638.527	638.635	0.107	NE089	Elsmere fine sandy loam, 0 to 2 percent slopes	0.000	0.000	0.000	0.000	0.005	0.107	0.000	0.000	0.000
Steele City	NE	Holt	638.635	638.752	0.117	NE089	Loup fine sandy loam, 0 to 2 percent slopes	0.000	0.000	0.000	0.000	0.117	0.117	0.000	0.000	0.000
Steele City	NE	Holt	638.752	638.785	0.034	NE089	Loup fine sandy loam, wet, 0 to 2 percent slopes	0.000	0.000	0.000	0.000	0.034	0.034	0.000	0.000	0.000
Steele City	NE	Holt	638.785	639.214	0.429	NE089	Elsmere fine sandy loam, 0 to 2 percent slopes	0.000	0.000	0.000	0.000	0.021	0.429	0.000	0.000	0.000
Steele City	NE	Holt	639.214	639.280	0.066	NE089	Ipage loamy sand, 0 to 3 percent slopes	0.065	0.000	0.000	0.000	0.001	0.066	0.000	0.000	0.065
Steele City	NE	Holt	639.280	639.335	0.055	NE089	Elsmere fine sandy loam, 0 to 2 percent slopes	0.000	0.000	0.000	0.000	0.003	0.055	0.000	0.000	0.000
Steele City	NE	Holt	639.335	639.359	0.025	NE089	Loup fine sandy loam, 0 to 2 percent slopes	0.000	0.000	0.000	0.000	0.025	0.025	0.000	0.000	0.000
Steele City	NE	Holt	639.359	639.403	0.044	NE089	Elsmere fine sandy loam, 0 to 2 percent slopes	0.000	0.000	0.000	0.000	0.002	0.044	0.000	0.000	0.000
Steele City	NE	Holt	639.403	639.651	0.248	NE089	Loup fine sandy loam, 0 to 2 percent slopes	0.000	0.000	0.000	0.000	0.248	0.248	0.000	0.000	0.000
Steele City	NE	Holt	639.651	639.721	0.070	NE089	Gannett loam, wet, 0 to 2 percent slopes	0.000	0.000	0.000	0.000	0.070	0.070	0.000	0.000	0.000
Steele City	NE	Holt	639.721	640.091	0.370	NE089	Loup fine sandy loam, 0 to 2 percent slopes	0.000	0.000	0.000	0.000	0.370	0.370	0.000	0.000	0.000
Steele City	NE	Holt	640.091	640.172	0.081	NE089	Elsmere fine sandy loam, 0 to 2 percent slopes	0.000	0.000	0.000	0.000	0.004	0.081	0.000	0.000	0.000
Steele City	NE	Holt	640.172	640.222	0.050	NE089	Loup fine sandy loam, 0 to 2 percent slopes	0.000	0.000	0.000	0.000	0.050	0.050	0.000	0.000	0.000
Steele City	NE	Holt	640.222	640.273	0.050	NE089	Gannett loam, wet, 0 to 2 percent slopes	0.000	0.000	0.000	0.000	0.050	0.050	0.000	0.000	0.000
Steele City	NE	Holt	640.273	640.374	0.102	NE089	Loup fine sandy loam, 0 to 2 percent slopes	0.000	0.000	0.000	0.000	0.102	0.102	0.000	0.000	0.000
Steele City	NE	Holt	640.374	640.419	0.045	NE089	Elsmere fine sandy loam, 0 to 2 percent slopes	0.000	0.000	0.000	0.000	0.002	0.045	0.000	0.000	0.000
Steele City	NE	Holt	640.419	640.466	0.047	NE089	Gannett loam, wet, 0 to 2 percent slopes	0.000	0.000	0.000	0.000	0.047	0.047	0.000	0.000	0.000
Steele City	NE	Holt	640.466	640.508	0.041	NE089	Elsmere fine sandy loam, 0 to 2 percent slopes	0.000	0.000	0.000	0.000	0.002	0.041	0.000	0.000	0.000

Appendix K – Soils by Milepost – Steele City Segment

Pipeline Segment	State	County	Beginning Milepost	Ending Milepost	Miles	Soil Series	Soil Series Name	Wind (miles)	Water (miles)	Low revegetation on Potential (miles)	Prime Farmland (miles)	Hydric Soils (miles)	Compaction on Prone (miles)	Stoney – Rocky (miles)	Shallow Bedrock (miles)	Droghty (miles)
Steele City	NE	Holt	640.508	640.634	0.126	NE089	Loup fine sandy loam, 0 to 2 percent slopes	0.000	0.000	0.000	0.000	0.126	0.126	0.000	0.000	0.000
Steele City	NE	Holt	640.634	640.686	0.053	NE089	Elsmere loamy fine sand, 0 to 2 percent slopes	0.052	0.000	0.000	0.000	0.001	0.053	0.000	0.000	0.000
Steele City	NE	Holt	640.686	640.783	0.097	NE089	Loup fine sandy loam, 0 to 2 percent slopes	0.000	0.000	0.000	0.000	0.097	0.097	0.000	0.000	0.000
Steele City	NE	Holt	640.783	640.835	0.053	NE089	Elsmere-Ipage loamy fine sands, 0 to 3 percent slopes	0.052	0.000	0.000	0.000	0.001	0.053	0.000	0.000	0.023
Steele City	NE	Holt	640.835	640.991	0.155	NE089	Loup fine sandy loam, wet, 0 to 2 percent slopes	0.000	0.000	0.000	0.000	0.155	0.155	0.000	0.000	0.000
Steele City	NE	Holt	640.991	641.045	0.054	NE089	Elsmere-Ipage loamy fine sands, 0 to 3 percent slopes	0.053	0.000	0.000	0.000	0.001	0.054	0.000	0.000	0.023
Steele City	NE	Holt	641.045	641.093	0.048	NE089	Loup fine sandy loam, wet, 0 to 2 percent slopes	0.000	0.000	0.000	0.000	0.048	0.048	0.000	0.000	0.000
Steele City	NE	Holt	641.093	641.615	0.522	NE089	Elsmere-Ipage loamy fine sands, 0 to 3 percent slopes	0.512	0.000	0.000	0.000	0.010	0.522	0.000	0.000	0.224
Steele City	NE	Holt	641.615	641.651	0.036	NE089	Loup fine sandy loam, wet, 0 to 2 percent slopes	0.000	0.000	0.000	0.000	0.036	0.036	0.000	0.000	0.000
Steele City	NE	Holt	641.651	641.951	0.300	NE089	Els-Ipage complex, 0 to 3 percent slopes	0.285	0.000	0.000	0.000	0.015	0.300	0.000	0.000	0.120
Steele City	NE	Holt	641.951	641.975	0.024	NE089	Tryon loamy fine sand, wet, 0 to 2 percent slopes	0.000	0.000	0.000	0.000	0.024	0.024	0.000	0.000	0.000
Steele City	NE	Holt	641.975	642.389	0.413	NE089	Els-Ipage complex, 0 to 3 percent slopes	0.393	0.000	0.000	0.000	0.021	0.413	0.000	0.000	0.165
Steele City	NE	Holt	642.389	642.454	0.065	NE089	Tryon loamy fine sand, wet, 0 to 2 percent slopes	0.000	0.000	0.000	0.000	0.065	0.065	0.000	0.000	0.000
Steele City	NE	Holt	642.454	642.638	0.184	NE089	Valentine-Els complex, 0 to 9 percent slopes	0.166	0.000	0.000	0.000	0.018	0.184	0.000	0.000	0.110
Steele City	NE	Holt	642.638	642.676	0.039	NE089	Els-Ipage complex, 0 to 3 percent slopes	0.037	0.000	0.000	0.000	0.002	0.039	0.000	0.000	0.016
Steele City	NE	Holt	642.676	642.765	0.089	NE089	Tryon loamy fine sand, wet, 0 to 2 percent slopes	0.000	0.000	0.000	0.000	0.089	0.089	0.000	0.000	0.000
Steele City	NE	Holt	642.765	642.802	0.037	NE089	Els-Ipage complex, 0 to 3 percent slopes	0.035	0.000	0.000	0.000	0.002	0.037	0.000	0.000	0.015
Steele City	NE	Holt	642.802	642.836	0.034	NE089	Tryon loamy fine sand, wet, 0 to 2 percent slopes	0.000	0.000	0.000	0.000	0.034	0.034	0.000	0.000	0.000
Steele City	NE	Holt	642.836	642.905	0.069	NE089	Els-Ipage complex, 0 to 3 percent slopes	0.065	0.000	0.000	0.000	0.003	0.069	0.000	0.000	0.027
Steele City	NE	Holt	642.905	642.929	0.024	NE089	Els loamy sand, 0 to 2 percent slopes	0.023	0.000	0.000	0.000	0.001	0.024	0.000	0.000	0.000
Steele City	NE	Holt	642.929	643.011	0.082	NE089	Elsmere fine sandy loam, 0 to 2 percent slopes	0.000	0.000	0.000	0.000	0.004	0.082	0.000	0.000	0.000
Steele City	NE	Holt	643.011	643.150	0.139	NE089	Loup fine sandy loam, wet, 0 to 2 percent slopes	0.000	0.000	0.000	0.000	0.139	0.139	0.000	0.000	0.000
Steele City	NE	Holt	643.150	643.338	0.189	NE089	Elsmere fine sandy loam, 0 to 2 percent slopes	0.000	0.000	0.000	0.000	0.009	0.189	0.000	0.000	0.000
Steele City	NE	Holt	643.338	643.556	0.218	NE089	Els loamy sand, 0 to 2 percent slopes	0.211	0.000	0.000	0.000	0.007	0.218	0.000	0.000	0.000
Steele City	NE	Holt	643.556	643.627	0.070	NE089	Valentine-Els complex, 0 to 9 percent slopes	0.063	0.000	0.000	0.000	0.007	0.070	0.000	0.000	0.042
Steele City	NE	Holt	643.627	643.889	0.263	NE089	Tryon loamy fine sand, wet, 0 to 2 percent slopes	0.000	0.000	0.000	0.000	0.263	0.263	0.000	0.000	0.000
Steele City	NE	Holt	643.889	643.928	0.038	NE089	Valentine-Els complex, 0 to 9 percent slopes	0.034	0.000	0.000	0.000	0.004	0.038	0.000	0.000	0.023
Steele City	NE	Holt	643.928	643.974	0.046	NE089	Tryon loamy fine sand, wet, 0 to 2 percent slopes	0.000	0.000	0.000	0.000	0.046	0.046	0.000	0.000	0.000
Steele City	NE	Holt	643.974	644.062	0.088	NE089	Valentine-Els complex, 0 to 9 percent slopes	0.079	0.000	0.000	0.000	0.009	0.088	0.000	0.000	0.053
Steele City	NE	Holt	644.062	644.082	0.021	NE089	Tryon loamy fine sand, wet, 0 to 2 percent slopes	0.000	0.000	0.000	0.000	0.021	0.021	0.000	0.000	0.000
Steele City	NE	Holt	644.082	644.322	0.240	NE089	Valentine-Els complex, 0 to 9 percent slopes	0.216	0.000	0.000	0.000	0.024	0.240	0.000	0.000	0.144
Steele City	NE	Holt	644.322	644.338	0.016	NE089	Tryon loamy fine sand, 0 to 2 percent slopes	0.000	0.000	0.000	0.000	0.016	0.016	0.000	0.000	0.000
Steele City	NE	Holt	644.338	644.716	0.379	NE089	Valentine-Els complex, 0 to 9 percent slopes	0.341	0.000	0.000	0.000	0.038	0.379	0.000	0.000	0.227
Steele City	NE	Holt	644.716	644.810	0.094	NE089	Tryon loamy fine sand, wet, 0 to 2 percent slopes	0.000	0.000	0.000	0.000	0.094	0.094	0.000	0.000	0.000
Steele City	NE	Holt	644.810	644.831	0.021	NE089	Valentine-Els complex, 0 to 9 percent slopes	0.019	0.000	0.000	0.000	0.002	0.021	0.000	0.000	0.013
Steele City	NE	Holt	644.831	644.919	0.088	NE089	Els-Ipage complex, 0 to 3 percent slopes	0.084	0.000	0.000	0.000	0.004	0.088	0.000	0.000	0.035
Steele City	NE	Holt	644.919	645.073	0.154	NE089	Elsmere loamy fine sand, 0 to 2 percent slopes	0.151	0.000	0.000	0.000	0.003	0.154	0.000	0.000	0.000
Steele City	NE	Holt	645.073	645.240	0.167	NE089	Loup fine sandy loam, 0 to 2 percent slopes	0.000	0.000	0.000	0.000	0.167	0.167	0.000	0.000	0.000
Steele City	NE	Holt	645.240	645.258	0.017	NE089	Elsmere-Selia loamy fine sands, 0 to 2 percent slopes	0.017	0.000	0.007	0.000	0.000	0.017	0.000	0.000	0.000
Steele City	NE	Holt	645.258	645.314	0.057	NE089	Loup fine sandy loam, 0 to 2 percent slopes	0.000	0.000	0.000	0.000	0.057	0.057	0.000	0.000	0.000
Steele City	NE	Holt	645.314	645.478	0.164	NE089	Elsmere-Ipage loamy fine sands, 0 to 3 percent	0.161	0.000	0.000	0.000	0.003	0.164	0.000	0.000	0.071

Appendix K – Soils by Milepost – Steele City Segment

Pipeline Segment	State	County	Beginning Milepost	Ending Milepost	Miles	Soil Series	Soil Series Name	Wind (miles)	Water (miles)	Low revegetation on Potential (miles)	Prime Farmland (miles)	Hydric Soils (miles)	Compaction on Prone (miles)	Stoney – Rocky (miles)	Shallow Bedrock (miles)	Droghty (miles)
							slopes									
Steele City	NE	Holt	645.478	645.766	0.288	NE089	Barney-Boel-Calamus complex, channeled	0.104	0.000	0.000	0.000	0.184	0.288	0.233	0.000	0.052
Steele City	NE	Holt	645.766	646.144	0.378	NE089	Elsmere loamy fine sand, 0 to 2 percent slopes	0.370	0.000	0.000	0.000	0.008	0.378	0.000	0.000	0.000
Steele City	NE	Holt	646.144	646.237	0.093	NE089	Loup fine sandy loam, 0 to 2 percent slopes	0.000	0.000	0.000	0.000	0.093	0.093	0.000	0.000	0.000
Steele City	NE	Holt	646.237	646.317	0.079	NE089	Elsmere loamy fine sand, 0 to 2 percent slopes	0.078	0.000	0.000	0.000	0.002	0.079	0.000	0.000	0.000
Steele City	NE	Holt	646.317	646.393	0.077	NE089	Loup fine sandy loam, 0 to 2 percent slopes	0.000	0.000	0.000	0.000	0.077	0.077	0.000	0.000	0.000
Steele City	NE	Holt	646.393	647.115	0.722	NE089	Els-Ipage complex, 0 to 3 percent slopes	0.686	0.000	0.000	0.000	0.036	0.722	0.000	0.000	0.289
Steele City	NE	Holt	647.115	647.340	0.225	NE089	Valentine-Els complex, 0 to 9 percent slopes	0.203	0.000	0.000	0.000	0.023	0.225	0.000	0.000	0.135
Steele City	NE	Holt	647.340	647.366	0.026	NE089	Tryon loamy fine sand, wet, 0 to 2 percent slopes	0.000	0.000	0.000	0.000	0.026	0.026	0.000	0.000	0.000
Steele City	NE	Holt	647.366	647.664	0.298	NE089	Els-Ipage complex, 0 to 3 percent slopes	0.283	0.000	0.000	0.000	0.015	0.298	0.000	0.000	0.119
Steele City	NE	Holt	647.664	647.746	0.082	NE089	Valentine-Els complex, 0 to 9 percent slopes	0.074	0.000	0.000	0.000	0.008	0.082	0.000	0.000	0.049
Steele City	NE	Holt	647.746	647.878	0.132	NE089	Els loamy sand, 0 to 2 percent slopes	0.128	0.000	0.000	0.000	0.004	0.132	0.000	0.000	0.000
Steele City	NE	Holt	647.878	647.919	0.041	NE089	Elsmere loamy fine sand, 0 to 2 percent slopes	0.040	0.000	0.000	0.000	0.001	0.041	0.000	0.000	0.000
Steele City	NE	Holt	647.919	647.976	0.057	NE089	Gannett loam, 0 to 2 percent slopes	0.000	0.000	0.000	0.000	0.057	0.057	0.000	0.000	0.000
Steele City	NE	Holt	647.976	648.375	0.399	NE089	Elsmere loamy fine sand, 0 to 2 percent slopes	0.391	0.000	0.000	0.000	0.008	0.399	0.000	0.000	0.000
Steele City	NE	Holt	648.375	648.529	0.154	NE089	Els-Ipage complex, 0 to 3 percent slopes	0.146	0.000	0.000	0.000	0.008	0.154	0.000	0.000	0.061
Steele City	NE	Holt	648.529	648.572	0.044	NE089	Gannett loam, 0 to 2 percent slopes	0.000	0.000	0.000	0.000	0.044	0.044	0.000	0.000	0.000
Steele City	NE	Holt	648.572	648.762	0.190	NE089	Gannett loam, wet, 0 to 2 percent slopes	0.000	0.000	0.000	0.000	0.190	0.190	0.000	0.000	0.000
Steele City	NE	Holt	648.762	648.922	0.160	NE089	Gannett loam, 0 to 2 percent slopes	0.000	0.000	0.000	0.000	0.160	0.160	0.000	0.000	0.000
Steele City	NE	Holt	648.922	649.046	0.124	NE089	Els-Ipage complex, 0 to 3 percent slopes	0.118	0.000	0.000	0.000	0.006	0.124	0.000	0.000	0.050
Steele City	NE	Holt	649.046	649.069	0.023	NE089	Tryon loamy fine sand, wet, 0 to 2 percent slopes	0.000	0.000	0.000	0.000	0.023	0.023	0.000	0.000	0.000
Steele City	NE	Holt	649.069	649.110	0.042	NE089	Els-Ipage complex, 0 to 3 percent slopes	0.039	0.000	0.000	0.000	0.002	0.042	0.000	0.000	0.017
Steele City	NE	Holt	649.110	649.250	0.140	NE089	Valentine-Els complex, 0 to 9 percent slopes	0.126	0.000	0.000	0.000	0.014	0.140	0.000	0.000	0.084
Steele City	NE	Holt	649.250	649.529	0.279	NE089	Valentine fine sand, rolling	0.273	0.273	0.000	0.000	0.006	0.279	0.000	0.000	0.273
Steele City	NE	Holt	649.529	649.685	0.157	NE089	Els-Ipage complex, 0 to 3 percent slopes	0.149	0.000	0.000	0.000	0.008	0.157	0.000	0.000	0.063
Steele City	NE	Holt	649.685	649.712	0.027	NE089	Tryon loamy fine sand, wet, 0 to 2 percent slopes	0.000	0.000	0.000	0.000	0.027	0.027	0.000	0.000	0.000
Steele City	NE	Holt	649.712	649.857	0.145	NE089	Els-Ipage complex, 0 to 3 percent slopes	0.138	0.000	0.000	0.000	0.007	0.145	0.000	0.000	0.058
Steele City	NE	Holt	649.857	650.135	0.278	NE089	Valentine-Els complex, 0 to 9 percent slopes	0.251	0.000	0.000	0.000	0.028	0.278	0.000	0.000	0.167
Steele City	NE	Holt	650.135	650.181	0.046	NE089	Els loamy sand, 0 to 2 percent slopes	0.044	0.000	0.000	0.000	0.001	0.046	0.000	0.000	0.000
Steele City	NE	Holt	650.181	650.276	0.095	NE089	Valentine-Els complex, 0 to 9 percent slopes	0.086	0.000	0.000	0.000	0.010	0.095	0.000	0.000	0.057
Steele City	NE	Holt	650.276	650.517	0.241	NE089	Valentine fine sand, rolling	0.236	0.236	0.000	0.000	0.005	0.241	0.000	0.000	0.236
Steele City	NE	Holt	650.517	651.156	0.639	NE089	Valentine fine sand, Rolling, and Hilly	0.639	0.639	0.000	0.000	0.000	0.639	0.000	0.000	0.639
Steele City	NE	Holt	651.156	651.414	0.258	NE089	Valentine-Els complex, 0 to 9 percent slopes	0.232	0.000	0.000	0.000	0.026	0.258	0.000	0.000	0.155
Steele City	NE	Holt	651.414	651.494	0.080	NE089	Tryon loamy fine sand, 0 to 2 percent slopes	0.000	0.000	0.000	0.000	0.080	0.080	0.000	0.000	0.000
Steele City	NE	Holt	651.494	651.912	0.418	NE089	Loup fine sandy loam, 0 to 2 percent slopes	0.000	0.000	0.000	0.000	0.418	0.418	0.000	0.000	0.000
Steele City	NE	Holt	651.912	652.302	0.390	NE089	Valentine-Els complex, 0 to 9 percent slopes	0.351	0.000	0.000	0.000	0.039	0.390	0.000	0.000	0.234
Steele City	NE	Holt	652.302	652.370	0.068	NE089	Almeria-Calamus complex, channeled	0.031	0.000	0.034	0.000	0.038	0.068	0.004	0.000	0.026
Steele City	NE	Holt	652.370	652.852	0.482	NE089	Els-Ipage complex, 0 to 3 percent slopes	0.458	0.000	0.000	0.000	0.024	0.482	0.000	0.000	0.193
Steele City	NE	Holt	652.852	652.985	0.133	NE089	Valentine-Els complex, 0 to 9 percent slopes	0.120	0.000	0.000	0.000	0.013	0.133	0.000	0.000	0.080
Steele City	NE	Holt	652.985	653.588	0.603	NE089	Valentine fine sand, rolling	0.591	0.591	0.000	0.000	0.012	0.603	0.000	0.000	0.591
Steele City	NE	Holt	653.588	653.777	0.189	NE089	Valentine-Els complex, 0 to 9 percent slopes	0.170	0.000	0.000	0.000	0.019	0.189	0.000	0.000	0.113
Steele City	NE	Holt	653.777	653.860	0.083	NE089	Els-Ipage complex, 0 to 3 percent slopes	0.079	0.000	0.000	0.000	0.004	0.083	0.000	0.000	0.033
Steele City	NE	Holt	653.860	653.939	0.079	NE089	Loup fine sandy loam, 0 to 2 percent slopes	0.000	0.000	0.000	0.000	0.079	0.079	0.000	0.000	0.000
Steele City	NE	Holt	653.939	654.080	0.141	NE089	Elsmere-Ipage loamy fine sands, 0 to 3 percent slopes	0.138	0.000	0.000	0.000	0.003	0.141	0.000	0.000	0.061

Appendix K – Soils by Milepost – Steele City Segment

Pipeline Segment	State	County	Beginning Milepost	Ending Milepost	Miles	Soil Series	Soil Series Name	Wind (miles)	Water (miles)	Low revegetation on Potential (miles)	Prime Farmland (miles)	Hydric Soils (miles)	Compaction on Prone (miles)	Stoney – Rocky (miles)	Shallow Bedrock (miles)	Droghty (miles)
Steele City	NE	Holt	654.080	654.083	0.003	NE089	Elsmere loamy fine sand, 0 to 2 percent slopes	0.003	0.000	0.000	0.000	0.000	0.003	0.000	0.000	0.000
Steele City	NE	Holt	654.083	654.090	0.006	NE089	Elsmere-Ipage loamy fine sands, 0 to 3 percent slopes	0.006	0.000	0.000	0.000	0.000	0.006	0.000	0.000	0.003
Steele City	NE	Holt	654.090	654.178	0.088	NE089	Loup fine sandy loam, 0 to 2 percent slopes	0.000	0.000	0.000	0.000	0.088	0.088	0.000	0.000	0.000
Steele City	NE	Holt	654.178	654.308	0.131	NE089	Elsmere loamy fine sand, 0 to 2 percent slopes	0.128	0.000	0.000	0.000	0.003	0.131	0.000	0.000	0.000
Steele City	NE	Holt	654.308	654.365	0.057	NE089	Loup fine sandy loam, 0 to 2 percent slopes	0.000	0.000	0.000	0.000	0.057	0.057	0.000	0.000	0.000
Steele City	NE	Holt	654.365	654.469	0.104	NE089	Elsmere loamy fine sand, 0 to 2 percent slopes	0.102	0.000	0.000	0.000	0.002	0.104	0.000	0.000	0.000
Steele City	NE	Holt	654.469	654.670	0.201	NE089	Elsmere-Ipage loamy fine sands, 0 to 3 percent slopes	0.197	0.000	0.000	0.000	0.004	0.201	0.000	0.000	0.086
Steele City	NE	Holt	654.670	654.718	0.048	NE089	Els-Ipage complex, 0 to 3 percent slopes	0.046	0.000	0.000	0.000	0.002	0.048	0.000	0.000	0.019
Steele City	NE	Holt	654.718	654.911	0.193	NE089	Elsmere-Ipage loamy fine sands, 0 to 3 percent slopes	0.189	0.000	0.000	0.000	0.004	0.193	0.000	0.000	0.083
Steele City	NE	Holt	654.911	655.044	0.133	NE089	Valentine-Els complex, 0 to 9 percent slopes	0.120	0.000	0.000	0.000	0.013	0.133	0.000	0.000	0.080
Steele City	NE	Holt	655.044	655.600	0.557	NE089	Valentine fine sand, rolling	0.545	0.545	0.000	0.000	0.011	0.557	0.000	0.000	0.545
Steele City	NE	Holt	655.600	655.961	0.361	NE089	Valentine-Els complex, 0 to 9 percent slopes	0.324	0.000	0.000	0.000	0.036	0.361	0.000	0.000	0.216
Steele City	NE	Holt	655.961	656.042	0.081	NE089	Loup fine sandy loam, 0 to 2 percent slopes	0.000	0.000	0.000	0.000	0.081	0.081	0.000	0.000	0.000
Steele City	NE	Holt	656.042	656.107	0.065	NE089	Els-Ipage complex, 0 to 3 percent slopes	0.061	0.000	0.000	0.000	0.003	0.065	0.000	0.000	0.026
Steele City	NE	Holt	656.107	656.359	0.252	NE089	Valentine-Els complex, 0 to 9 percent slopes	0.227	0.000	0.000	0.000	0.025	0.252	0.000	0.000	0.151
Steele City	NE	Holt	656.359	656.393	0.034	NE089	Els-Ipage complex, 0 to 3 percent slopes	0.032	0.000	0.000	0.000	0.002	0.034	0.000	0.000	0.014
Steele City	NE	Holt	656.393	656.415	0.023	NE089	Tryon loamy fine sand, 0 to 2 percent slopes	0.000	0.000	0.000	0.000	0.023	0.023	0.000	0.000	0.000
Steele City	NE	Holt	656.415	656.736	0.321	NE089	Valentine-Els complex, 0 to 9 percent slopes	0.289	0.000	0.000	0.000	0.032	0.321	0.000	0.000	0.192
Steele City	NE	Holt	656.736	656.887	0.151	NE089	Valentine fine sand, rolling	0.148	0.148	0.000	0.000	0.003	0.151	0.000	0.000	0.148
Steele City	NE	Holt	656.887	657.048	0.161	NE089	Valentine-Els complex, 0 to 9 percent slopes	0.145	0.000	0.000	0.000	0.016	0.161	0.000	0.000	0.096
Steele City	NE	Holt	657.048	657.838	0.790	NE089	Valentine fine sand, rolling	0.774	0.774	0.000	0.000	0.016	0.790	0.000	0.000	0.774
Steele City	NE	Holt	657.838	657.894	0.057	NE089	Valentine-Els complex, 0 to 9 percent slopes	0.051	0.000	0.000	0.000	0.006	0.057	0.000	0.000	0.034
Steele City	NE	Holt	657.894	658.208	0.314	NE089	Tryon loamy fine sand, 0 to 2 percent slopes	0.000	0.000	0.000	0.000	0.314	0.314	0.000	0.000	0.000
Steele City	NE	Holt	658.208	658.485	0.278	NE089	Els loamy sand, 0 to 2 percent slopes	0.269	0.000	0.000	0.000	0.008	0.278	0.000	0.000	0.000
Steele City	NE	Holt	658.485	658.617	0.132	NE089	Els-Ipage complex, 0 to 3 percent slopes	0.125	0.000	0.000	0.000	0.007	0.132	0.000	0.000	0.053
Steele City	NE	Holt	658.617	658.730	0.113	NE089	Valentine-Els complex, 0 to 9 percent slopes	0.102	0.000	0.000	0.000	0.011	0.113	0.000	0.000	0.068
Steele City	NE	Holt	658.730	658.858	0.128	NE089	Els-Ipage complex, 0 to 3 percent slopes	0.121	0.000	0.000	0.000	0.006	0.128	0.000	0.000	0.051
Steele City	NE	Holt	658.858	658.932	0.075	NE089	Blown out land-Valentine complex, 6 to 60 percent slopes	0.071	0.071	0.000	0.000	0.004	0.075	0.000	0.000	0.071
Steele City	NE	Holt	658.932	659.094	0.162	NE089	Valentine fine sand, rolling	0.158	0.158	0.000	0.000	0.003	0.162	0.000	0.000	0.158
Steele City	NE	Holt	659.094	659.185	0.091	NE089	Els-Ipage complex, 0 to 3 percent slopes	0.086	0.000	0.000	0.000	0.005	0.091	0.000	0.000	0.036
Steele City	NE	Holt	659.185	659.419	0.235	NE089	Tryon loamy fine sand, 0 to 2 percent slopes	0.000	0.000	0.000	0.000	0.235	0.235	0.000	0.000	0.000
Steele City	NE	Holt	659.419	659.506	0.087	NE089	Els-Ipage complex, 0 to 3 percent slopes	0.083	0.000	0.000	0.000	0.004	0.087	0.000	0.000	0.035
Steele City	NE	Holt	659.506	659.582	0.076	NE089	Tryon loamy fine sand, 0 to 2 percent slopes	0.000	0.000	0.000	0.000	0.076	0.076	0.000	0.000	0.000
Steele City	NE	Holt	659.582	659.638	0.056	NE089	Els-Ipage complex, 0 to 3 percent slopes	0.053	0.000	0.000	0.000	0.003	0.056	0.000	0.000	0.022
Steele City	NE	Holt	659.638	659.747	0.109	NE089	Valentine-Els complex, 0 to 9 percent slopes	0.098	0.000	0.000	0.000	0.011	0.109	0.000	0.000	0.065
Steele City	NE	Holt	659.747	659.813	0.066	NE089	Tryon loamy fine sand, 0 to 2 percent slopes	0.000	0.000	0.000	0.000	0.066	0.066	0.000	0.000	0.000
Steele City	NE	Holt	659.813	659.837	0.024	NE089	Els-Ipage complex, 0 to 3 percent slopes	0.023	0.000	0.000	0.000	0.001	0.024	0.000	0.000	0.010
Steele City	NE	Holt	659.837	660.006	0.169	NE089	Valentine-Els complex, 0 to 9 percent slopes	0.152	0.000	0.000	0.000	0.017	0.169	0.000	0.000	0.102
Steele City	NE	Holt	660.006	660.169	0.163	NE089	Els-Ipage complex, 0 to 3 percent slopes	0.155	0.000	0.000	0.000	0.008	0.163	0.000	0.000	0.065
Steele City	NE	Holt	660.169	660.328	0.159	NE089	Valentine fine sand, rolling	0.156	0.156	0.000	0.000	0.003	0.159	0.000	0.000	0.156
Steele City	NE	Holt	660.328	660.572	0.244	NE089	Valentine fine sand, Rolling, and Hilly	0.244	0.244	0.000	0.000	0.000	0.244	0.000	0.000	0.244

Appendix K – Soils by Milepost – Steele City Segment

Pipeline Segment	State	County	Beginning Milepost	Ending Milepost	Miles	Soil Series	Soil Series Name	Wind (miles)	Water (miles)	Low revegetation on Potential (miles)	Prime Farmland (miles)	Hydric Soils (miles)	Compaction on Prone (miles)	Stoney – Rocky (miles)	Shallow Bedrock (miles)	Droghty (miles)
Steele City	NE	Holt	660.572	660.944	0.372	NE089	Valentine fine sand, rolling	0.365	0.365	0.000	0.000	0.007	0.372	0.000	0.000	0.365
Steele City	NE	Holt	660.944	661.208	0.263	NE089	Els-Ipage complex, 0 to 3 percent slopes	0.250	0.000	0.000	0.000	0.013	0.263	0.000	0.000	0.105
Steele City	NE	Holt	661.208	661.281	0.073	NE089	Valentine-Els complex, 0 to 9 percent slopes	0.066	0.000	0.000	0.000	0.007	0.073	0.000	0.000	0.044
Steele City	NE	Holt	661.281	661.502	0.221	NE089	Els-Ipage complex, 0 to 3 percent slopes	0.210	0.000	0.000	0.000	0.011	0.221	0.000	0.000	0.088
Steele City	NE	Holt	661.502	661.613	0.111	NE089	Loup fine sandy loam, 0 to 2 percent slopes	0.000	0.000	0.000	0.000	0.111	0.111	0.000	0.000	0.000
Steele City	NE	Holt	661.613	661.700	0.087	NE089	Els loamy sand, 0 to 2 percent slopes	0.084	0.000	0.000	0.000	0.003	0.087	0.000	0.000	0.000
Steele City	NE	Holt	661.700	661.785	0.085	NE089	Tryon loamy fine sand, wet, 0 to 2 percent slopes	0.000	0.000	0.000	0.000	0.085	0.085	0.000	0.000	0.000
Steele City	NE	Holt	661.785	661.839	0.054	NE089	Els-Ipage complex, 0 to 3 percent slopes	0.051	0.000	0.000	0.000	0.003	0.054	0.000	0.000	0.022
Steele City	NE	Holt	661.839	662.060	0.221	NE089	Elsmere-Selia loamy fine sands, 0 to 2 percent slopes	0.217	0.000	0.084	0.000	0.004	0.221	0.000	0.000	0.000
Steele City	NE	Holt	662.060	662.300	0.240	NE089	Els loamy sand, 0 to 2 percent slopes	0.233	0.000	0.000	0.000	0.007	0.240	0.000	0.000	0.000
Steele City	NE	Holt	662.300	662.344	0.045	NE089	Els-Ipage complex, 0 to 3 percent slopes	0.042	0.000	0.000	0.000	0.002	0.045	0.000	0.000	0.018
Steele City	NE	Holt	662.344	662.428	0.084	NE089	Tryon loamy fine sand, wet, 0 to 2 percent slopes	0.000	0.000	0.000	0.000	0.084	0.084	0.000	0.000	0.000
Steele City	NE	Holt	662.428	662.461	0.033	NE089	Els-Ipage complex, 0 to 3 percent slopes	0.031	0.000	0.000	0.000	0.002	0.033	0.000	0.000	0.013
Steele City	NE	Holt	662.461	662.842	0.381	NE089	Els loamy sand, 0 to 2 percent slopes	0.369	0.000	0.000	0.000	0.011	0.381	0.000	0.000	0.000
Steele City	NE	Holt	662.842	663.023	0.182	NE089	Els-Ipage complex, 0 to 3 percent slopes	0.173	0.000	0.000	0.000	0.009	0.182	0.000	0.000	0.073
Steele City	NE	Holt	663.023	663.089	0.066	NE089	Valentine-Els complex, 0 to 9 percent slopes	0.059	0.000	0.000	0.000	0.007	0.066	0.000	0.000	0.040
Steele City	NE	Holt	663.089	663.113	0.023	NE089	Els-Ipage complex, 0 to 3 percent slopes	0.022	0.000	0.000	0.000	0.001	0.023	0.000	0.000	0.009
Steele City	NE	Holt	663.113	663.195	0.082	NE089	Marlake fine sandy loam, 0 to 2 percent slopes	0.000	0.000	0.000	0.000	0.082	0.082	0.000	0.000	0.000
Steele City	NE	Holt	663.195	663.224	0.030	NE089	Tryon loamy fine sand, wet, 0 to 2 percent slopes	0.000	0.000	0.000	0.000	0.030	0.030	0.000	0.000	0.000
Steele City	NE	Holt	663.224	663.397	0.172	NE089	Els-Ipage complex, 0 to 3 percent slopes	0.163	0.000	0.000	0.000	0.009	0.172	0.000	0.000	0.069
Steele City	NE	Holt	663.397	663.535	0.139	NE089	Tryon loamy fine sand, wet, 0 to 2 percent slopes	0.000	0.000	0.000	0.000	0.139	0.139	0.000	0.000	0.000
Steele City	NE	Holt	663.535	663.824	0.288	NE089	Els-Ipage complex, 0 to 3 percent slopes	0.274	0.000	0.000	0.000	0.014	0.288	0.000	0.000	0.115
Steele City	NE	Holt	663.824	663.874	0.050	NE089	Tryon loamy fine sand, wet, 0 to 2 percent slopes	0.000	0.000	0.000	0.000	0.050	0.050	0.000	0.000	0.000
Steele City	NE	Holt	663.874	664.006	0.132	NE089	Els-Ipage complex, 0 to 3 percent slopes	0.125	0.000	0.000	0.000	0.007	0.132	0.000	0.000	0.053
Steele City	NE	Holt	664.006	664.078	0.072	NE089	Tryon loamy fine sand, wet, 0 to 2 percent slopes	0.000	0.000	0.000	0.000	0.072	0.072	0.000	0.000	0.000
Steele City	NE	Holt	664.078	664.179	0.101	NE089	Els-Ipage complex, 0 to 3 percent slopes	0.096	0.000	0.000	0.000	0.005	0.101	0.000	0.000	0.040
Steele City	NE	Holt	664.179	664.182	0.003	NE089	Valentine-Els complex, 0 to 9 percent slopes	0.003	0.000	0.000	0.000	0.000	0.003	0.000	0.000	0.002
Steele City	NE	Holt	664.182	664.236	0.054	NE089	Els-Ipage complex, 0 to 3 percent slopes	0.051	0.000	0.000	0.000	0.003	0.054	0.000	0.000	0.022
Steele City	NE	Holt	664.236	664.279	0.043	NE089	Valentine-Els complex, 0 to 9 percent slopes	0.039	0.000	0.000	0.000	0.004	0.043	0.000	0.000	0.026
Steele City	NE	Holt	664.279	664.840	0.561	NE089	Valentine fine sand, Rolling, and Hilly	0.561	0.561	0.000	0.000	0.000	0.561	0.000	0.000	0.561
Steele City	NE	Holt	664.840	665.043	0.203	NE089	Valentine fine sand, rolling	0.199	0.199	0.000	0.000	0.004	0.203	0.000	0.000	0.199
Steele City	NE	Holt	665.043	665.134	0.092	NE089	Valentine-Els complex, 0 to 9 percent slopes	0.083	0.000	0.000	0.000	0.009	0.092	0.000	0.000	0.055
Steele City	NE	Holt	665.134	665.197	0.062	NE089	Els-Ipage complex, 0 to 3 percent slopes	0.059	0.000	0.000	0.000	0.003	0.062	0.000	0.000	0.025
Steele City	NE	Holt	665.197	665.546	0.350	NE089	Valentine fine sand, 3 to 9 percent slopes	0.332	0.000	0.000	0.000	0.017	0.350	0.000	0.000	0.332
Steele City	NE	Holt	665.546	665.576	0.030	NE089	Els-Ipage complex, 0 to 3 percent slopes	0.029	0.000	0.000	0.000	0.002	0.030	0.000	0.000	0.012
Steele City	NE	Holt	665.576	665.654	0.078	NE089	Tryon loamy fine sand, wet, 0 to 2 percent slopes	0.000	0.000	0.000	0.000	0.078	0.078	0.000	0.000	0.000
Steele City	NE	Holt	665.654	665.817	0.163	NE089	Els-Ipage complex, 0 to 3 percent slopes	0.155	0.000	0.000	0.000	0.008	0.163	0.000	0.000	0.065
Steele City	NE	Holt	665.817	666.214	0.397	NE089	Valentine-Els complex, 0 to 9 percent slopes	0.357	0.000	0.000	0.000	0.040	0.397	0.000	0.000	0.238
Steele City	NE	Holt	666.214	666.244	0.030	NE089	Valentine fine sand, rolling	0.030	0.030	0.000	0.000	0.001	0.030	0.000	0.000	0.030
Steele City	NE	Holt	666.244	666.408	0.164	NE089	Valentine-Els complex, 0 to 9 percent slopes	0.148	0.000	0.000	0.000	0.016	0.164	0.000	0.000	0.099
Steele City	NE	Holt	666.408	666.513	0.105	NE089	Valentine fine sand, rolling	0.102	0.102	0.000	0.000	0.002	0.105	0.000	0.000	0.102
Steele City	NE	Holt	666.513	667.258	0.745	NE089	Valentine-Els complex, 0 to 9 percent slopes	0.671	0.000	0.000	0.000	0.075	0.745	0.000	0.000	0.447
Steele City	NE	Holt	667.258	667.365	0.107	NE089	Els-Ipage complex, 0 to 3 percent slopes	0.101	0.000	0.000	0.000	0.005	0.107	0.000	0.000	0.043
Steele City	NE	Holt	667.365	667.469	0.104	NE089	Valentine-Els complex, 0 to 9 percent slopes	0.094	0.000	0.000	0.000	0.010	0.104	0.000	0.000	0.063

Appendix K – Soils by Milepost – Steele City Segment

Pipeline Segment	State	County	Beginning Milepost	Ending Milepost	Miles	Soil Series	Soil Series Name	Wind (miles)	Water (miles)	Low revegetation on Potential (miles)	Prime Farmland (miles)	Hydric Soils (miles)	Compaction on Prone (miles)	Stoney – Rocky (miles)	Shallow Bedrock (miles)	Droghty (miles)
Steele City	NE	Holt	667.469	667.528	0.059	NE089	Els-Ipage complex, 0 to 3 percent slopes	0.056	0.000	0.000	0.000	0.003	0.059	0.000	0.000	0.024
Steele City	NE	Holt	667.528	667.631	0.103	NE089	Els loamy sand, 0 to 2 percent slopes	0.100	0.000	0.000	0.000	0.003	0.103	0.000	0.000	0.000
Steele City	NE	Holt	667.631	667.697	0.066	NE089	Els-Ipage complex, 0 to 3 percent slopes	0.063	0.000	0.000	0.000	0.003	0.066	0.000	0.000	0.026
Steele City	NE	Holt	667.697	667.822	0.125	NE089	Tryon loamy fine sand, 0 to 2 percent slopes	0.000	0.000	0.000	0.000	0.125	0.125	0.000	0.000	0.000
Steele City	NE	Holt	667.822	667.862	0.040	NE089	Tryon loamy fine sand, wet, 0 to 2 percent slopes	0.000	0.000	0.000	0.000	0.040	0.040	0.000	0.000	0.000
Steele City	NE	Holt	667.862	668.009	0.147	NE089	Tryon loamy fine sand, 0 to 2 percent slopes	0.000	0.000	0.000	0.000	0.147	0.147	0.000	0.000	0.000
Steele City	NE	Holt	668.009	668.023	0.014	NE089	Tryon loamy fine sand, wet, 0 to 2 percent slopes	0.000	0.000	0.000	0.000	0.014	0.014	0.000	0.000	0.000
Steele City	NE	Garfield	668.023	668.383	0.360	NE071	Tryon loamy fine sand, wet, 0 to 2 percent slopes	0.000	0.000	0.000	0.000	0.360	0.360	0.000	0.000	0.000
Steele City	NE	Garfield	668.383	668.417	0.034	NE071	Tryon loamy fine sand, 0 to 2 percent slopes	0.000	0.000	0.000	0.000	0.034	0.034	0.000	0.000	0.000
Steele City	NE	Garfield	668.417	668.609	0.192	NE071	Valentine-Els complex, 0 to 9 percent slopes	0.179	0.000	0.000	0.000	0.013	0.192	0.000	0.000	0.106
Steele City	NE	Garfield	668.609	668.724	0.115	NE071	Valentine fine sand, rolling	0.113	0.113	0.000	0.000	0.002	0.115	0.000	0.000	0.113
Steele City	NE	Garfield	668.724	669.284	0.559	NE071	Valentine fine sand, rolling and hilly	0.548	0.548	0.000	0.000	0.011	0.559	0.000	0.000	0.548
Steele City	NE	Garfield	669.284	669.389	0.106	NE071	Valentine fine sand, rolling	0.103	0.103	0.000	0.000	0.002	0.106	0.000	0.000	0.103
Steele City	NE	Garfield	669.389	669.468	0.079	NE071	Valentine-Els complex, 0 to 9 percent slopes	0.073	0.000	0.000	0.000	0.006	0.079	0.000	0.000	0.043
Steele City	NE	Garfield	669.468	669.698	0.230	NE071	Valentine fine sand, rolling	0.225	0.225	0.000	0.000	0.005	0.230	0.000	0.000	0.225
Steele City	NE	Garfield	669.698	669.717	0.019	NE071	Tryon loamy fine sand, 0 to 2 percent slopes	0.000	0.000	0.000	0.000	0.019	0.019	0.000	0.000	0.000
Steele City	NE	Garfield	669.717	670.125	0.408	NE071	Valentine fine sand, rolling and hilly	0.400	0.400	0.000	0.000	0.008	0.408	0.000	0.000	0.400
Steele City	NE	Garfield	670.125	670.156	0.030	NE071	Valentine-Els complex, 0 to 9 percent slopes	0.028	0.000	0.000	0.000	0.002	0.030	0.000	0.000	0.017
Steele City	NE	Garfield	670.156	670.218	0.063	NE071	Valentine fine sand, rolling	0.061	0.061	0.000	0.000	0.001	0.063	0.000	0.000	0.061
Steele City	NE	Garfield	670.218	670.247	0.029	NE071	Tryon-Ipage complex, 0 to 3 percent slopes	0.012	0.000	0.000	0.000	0.018	0.029	0.000	0.000	0.012
Steele City	NE	Garfield	670.247	670.277	0.030	NE071	Valentine fine sand, rolling	0.029	0.029	0.000	0.000	0.001	0.030	0.000	0.000	0.029
Steele City	NE	Garfield	670.277	670.309	0.032	NE071	Tryon-Ipage complex, 0 to 3 percent slopes	0.013	0.000	0.000	0.000	0.019	0.032	0.000	0.000	0.013
Steele City	NE	Garfield	670.309	670.335	0.026	NE071	Valentine fine sand, rolling	0.025	0.025	0.000	0.000	0.001	0.026	0.000	0.000	0.025
Steele City	NE	Garfield	670.335	670.344	0.009	NE071	Tryon-Ipage complex, 0 to 3 percent slopes	0.004	0.000	0.000	0.000	0.005	0.009	0.000	0.000	0.004
Steele City	NE	Garfield	670.344	670.415	0.071	NE071	Valentine fine sand, rolling	0.069	0.069	0.000	0.000	0.001	0.071	0.000	0.000	0.069
Steele City	NE	Garfield	670.415	670.456	0.041	NE071	Valentine-Els complex, 0 to 9 percent slopes	0.038	0.000	0.000	0.000	0.003	0.041	0.000	0.000	0.023
Steele City	NE	Garfield	670.456	670.498	0.042	NE071	Valentine fine sand, rolling	0.041	0.041	0.000	0.000	0.001	0.042	0.000	0.000	0.041
Steele City	NE	Garfield	670.498	670.550	0.052	NE071	Valentine-Els complex, 0 to 9 percent slopes	0.049	0.000	0.000	0.000	0.004	0.052	0.000	0.000	0.029
Steele City	NE	Garfield	670.550	670.645	0.094	NE071	Valentine fine sand, rolling	0.093	0.093	0.000	0.000	0.002	0.094	0.000	0.000	0.093
Steele City	NE	Garfield	670.645	670.790	0.146	NE071	Valentine-Els complex, 0 to 9 percent slopes	0.136	0.000	0.000	0.000	0.010	0.146	0.000	0.000	0.080
Steele City	NE	Garfield	670.790	670.828	0.038	NE071	Valentine fine sand, rolling	0.037	0.037	0.000	0.000	0.001	0.038	0.000	0.000	0.037
Steele City	NE	Garfield	670.828	670.896	0.067	NE071	Valentine-Els complex, 0 to 9 percent slopes	0.063	0.000	0.000	0.000	0.005	0.067	0.000	0.000	0.037
Steele City	NE	Garfield	670.896	670.920	0.025	NE071	Tryon loamy fine sand, wet, 0 to 2 percent slopes	0.000	0.000	0.000	0.000	0.025	0.025	0.000	0.000	0.000
Steele City	NE	Garfield	670.920	671.014	0.094	NE071	Valentine-Els complex, 0 to 9 percent slopes	0.088	0.000	0.000	0.000	0.007	0.094	0.000	0.000	0.052
Steele City	NE	Garfield	671.014	671.304	0.290	NE071	Valentine fine sand, rolling	0.284	0.284	0.000	0.000	0.006	0.290	0.000	0.000	0.284
Steele City	NE	Garfield	671.304	671.615	0.311	NE071	Valentine fine sand, rolling and hilly	0.304	0.304	0.000	0.000	0.006	0.311	0.000	0.000	0.304
Steele City	NE	Garfield	671.615	672.386	0.771	NE071	Valentine fine sand, rolling	0.756	0.756	0.000	0.000	0.015	0.771	0.000	0.000	0.756
Steele City	NE	Garfield	672.386	672.444	0.058	NE071	Blownout land-Valentine complex, 6 to 60 percent slopes	0.055	0.055	0.000	0.000	0.003	0.058	0.000	0.000	0.055
Steele City	NE	Garfield	672.444	672.477	0.033	NE071	Valentine fine sand, rolling	0.032	0.032	0.000	0.000	0.001	0.033	0.000	0.000	0.032
Steele City	NE	Garfield	672.477	672.493	0.016	NE071	Blownout land-Valentine complex, 6 to 60 percent slopes	0.015	0.015	0.000	0.000	0.001	0.016	0.000	0.000	0.015
Steele City	NE	Garfield	672.493	673.078	0.586	NE071	Valentine fine sand, rolling	0.574	0.574	0.000	0.000	0.012	0.586	0.000	0.000	0.574
Steele City	NE	Garfield	673.078	673.370	0.292	NE071	Valentine fine sand, rolling and hilly	0.286	0.286	0.000	0.000	0.006	0.292	0.000	0.000	0.286
Steele City	NE	Garfield	673.370	673.407	0.038	NE071	Valentine fine sand, rolling	0.037	0.037	0.000	0.000	0.001	0.038	0.000	0.000	0.037

Appendix K – Soils by Milepost – Steele City Segment

Pipeline Segment	State	County	Beginning Milepost	Ending Milepost	Miles	Soil Series	Soil Series Name	Wind (miles)	Water (miles)	Low revegetation on Potential (miles)	Prime Farmland (miles)	Hydric Soils (miles)	Compaction on Prone (miles)	Stoney – Rocky (miles)	Shallow Bedrock (miles)	Droghty (miles)
Steele City	NE	Garfield	673.407	673.527	0.120	NE071	Valentine fine sand, rolling and hilly	0.117	0.117	0.000	0.000	0.002	0.120	0.000	0.000	0.117
Steele City	NE	Garfield	673.527	673.608	0.081	NE071	Valentine fine sand, rolling	0.079	0.079	0.000	0.000	0.002	0.081	0.000	0.000	0.079
Steele City	NE	Garfield	673.608	673.867	0.259	NE071	Valentine fine sand, rolling and hilly	0.253	0.253	0.000	0.000	0.005	0.259	0.000	0.000	0.253
Steele City	NE	Garfield	673.867	674.020	0.153	NE071	Blownout land-Valentine complex, 6 to 60 percent slopes	0.145	0.145	0.000	0.000	0.008	0.153	0.000	0.000	0.145
Steele City	NE	Garfield	674.020	675.037	1.017	NE071	Valentine fine sand, rolling and hilly	0.997	0.997	0.000	0.000	0.020	1.017	0.000	0.000	0.997
Steele City	NE	Garfield	675.037	675.068	0.032	NE071	Valentine fine sand, rolling	0.031	0.031	0.000	0.000	0.001	0.032	0.000	0.000	0.031
Steele City	NE	Garfield	675.068	675.274	0.206	NE071	Valentine fine sand, rolling and hilly	0.202	0.202	0.000	0.000	0.004	0.206	0.000	0.000	0.202
Steele City	NE	Garfield	675.274	675.335	0.061	NE071	Valentine fine sand, rolling	0.060	0.060	0.000	0.000	0.001	0.061	0.000	0.000	0.060
Steele City	NE	Garfield	675.335	675.404	0.070	NE071	Valentine fine sand, rolling and hilly	0.068	0.068	0.000	0.000	0.001	0.070	0.000	0.000	0.068
Steele City	NE	Garfield	675.404	675.716	0.311	NE071	Valentine fine sand, rolling	0.305	0.305	0.000	0.000	0.006	0.311	0.000	0.000	0.305
Steele City	NE	Garfield	675.716	676.456	0.740	NE071	Valentine fine sand, rolling and hilly	0.725	0.725	0.000	0.000	0.015	0.740	0.000	0.000	0.725
Steele City	NE	Garfield	676.456	676.515	0.059	NE071	Valentine fine sand, rolling	0.058	0.058	0.000	0.000	0.001	0.059	0.000	0.000	0.058
Steele City	NE	Garfield	676.515	676.695	0.180	NE071	Valentine loamy fine sand, 3 to 9 percent slopes	0.180	0.000	0.000	0.000	0.000	0.180	0.000	0.000	0.180
Steele City	NE	Garfield	676.695	676.756	0.061	NE071	Hersh-Gates complex, 0 to 3 percent slopes	0.000	0.000	0.000	0.000	0.000	0.061	0.000	0.000	0.061
Steele City	NE	Garfield	676.756	677.154	0.397	NE071	Valentine loamy fine sand, 3 to 9 percent slopes	0.397	0.000	0.000	0.000	0.000	0.397	0.000	0.000	0.397
Steele City	NE	Garfield	677.154	677.377	0.223	NE071	Valentine fine sand, rolling	0.219	0.219	0.000	0.000	0.004	0.223	0.000	0.000	0.219
Steele City	NE	Garfield	677.377	677.488	0.111	NE071	Hersh-Gates complex, 0 to 3 percent slopes	0.000	0.000	0.000	0.000	0.000	0.111	0.000	0.000	0.111
Steele City	NE	Garfield	677.488	677.657	0.169	NE071	Valentine loamy fine sand, 3 to 9 percent slopes	0.169	0.000	0.000	0.000	0.000	0.169	0.000	0.000	0.169
Steele City	NE	Wheeler	677.657	677.809	0.152	NE183	Valentine-Dunday loamy fine sands, 3 to 9 percent slopes	0.152	0.000	0.000	0.000	0.000	0.152	0.000	0.000	0.152
Steele City	NE	Wheeler	677.809	677.896	0.088	NE183	Boelus loamy sand, 0 to 3 percent slopes	0.088	0.000	0.000	0.000	0.000	0.088	0.000	0.000	0.088
Steele City	NE	Wheeler	677.896	678.022	0.126	NE183	Valentine-Dunday loamy fine sands, 3 to 9 percent slopes	0.126	0.000	0.000	0.000	0.000	0.126	0.000	0.000	0.126
Steele City	NE	Wheeler	678.022	678.126	0.104	NE183	Anselmo fine sandy loam, 2 to 6 percent slopes	0.000	0.000	0.000	0.000	0.000	0.104	0.000	0.000	0.104
Steele City	NE	Wheeler	678.126	678.158	0.032	NE183	Valentine-Dunday loamy fine sands, 3 to 9 percent slopes	0.032	0.000	0.000	0.000	0.000	0.032	0.000	0.000	0.032
Steele City	NE	Wheeler	678.158	678.218	0.060	NE183	Anselmo fine sandy loam, 2 to 6 percent slopes	0.000	0.000	0.000	0.000	0.000	0.060	0.000	0.000	0.060
Steele City	NE	Wheeler	678.218	678.299	0.082	NE183	Valentine fine sand, rolling	0.080	0.080	0.000	0.000	0.002	0.082	0.000	0.000	0.080
Steele City	NE	Wheeler	678.299	678.347	0.047	NE183	Anselmo fine sandy loam, 2 to 6 percent slopes	0.000	0.000	0.000	0.000	0.000	0.047	0.000	0.000	0.047
Steele City	NE	Wheeler	678.347	678.389	0.043	NE183	Boelus loamy sand, 0 to 3 percent slopes	0.043	0.000	0.000	0.000	0.000	0.043	0.000	0.000	0.043
Steele City	NE	Wheeler	678.389	678.486	0.097	NE183	Dunday loamy fine sand, 3 to 6 percent slopes	0.097	0.000	0.000	0.000	0.000	0.097	0.000	0.000	0.097
Steele City	NE	Wheeler	678.486	678.518	0.032	NE183	Dunday loamy fine sand, 0 to 3 percent slopes	0.032	0.000	0.000	0.000	0.000	0.032	0.000	0.000	0.032
Steele City	NE	Wheeler	678.518	678.555	0.037	NE183	Dunday loamy fine sand, 3 to 6 percent slopes	0.037	0.000	0.000	0.000	0.000	0.037	0.000	0.000	0.037
Steele City	NE	Wheeler	678.555	678.805	0.250	NE183	Valentine-Dunday loamy fine sands, 3 to 9 percent slopes	0.250	0.000	0.000	0.000	0.000	0.250	0.000	0.000	0.250
Steele City	NE	Wheeler	678.805	678.965	0.159	NE183	Valentine fine sand, rolling	0.156	0.156	0.000	0.000	0.003	0.159	0.000	0.000	0.156
Steele City	NE	Wheeler	678.965	679.124	0.160	NE183	Valentine fine sand, 3 to 9 percent slopes	0.152	0.000	0.000	0.000	0.008	0.160	0.000	0.000	0.152
Steele City	NE	Wheeler	679.124	679.253	0.128	NE183	Dunday loamy fine sand, 3 to 6 percent slopes	0.128	0.000	0.000	0.000	0.000	0.128	0.000	0.000	0.128
Steele City	NE	Wheeler	679.253	679.371	0.119	NE183	Valentine fine sand, rolling	0.116	0.116	0.000	0.000	0.002	0.119	0.000	0.000	0.116
Steele City	NE	Wheeler	679.371	679.549	0.178	NE183	Dunday loamy fine sand, 3 to 6 percent slopes	0.178	0.000	0.000	0.000	0.000	0.178	0.000	0.000	0.178
Steele City	NE	Wheeler	679.549	679.692	0.143	NE183	Ipage loamy sand, 0 to 3 percent slopes	0.140	0.000	0.000	0.000	0.003	0.143	0.000	0.000	0.140
Steele City	NE	Wheeler	679.692	679.967	0.274	NE183	Valentine fine sand, 3 to 9 percent slopes	0.260	0.000	0.000	0.000	0.014	0.274	0.000	0.000	0.260
Steele City	NE	Wheeler	679.967	680.239	0.272	NE183	Ipage loamy sand, 0 to 3 percent slopes	0.267	0.000	0.000	0.000	0.005	0.272	0.000	0.000	0.267
Steele City	NE	Wheeler	680.239	680.287	0.049	NE183	Els-Ipage fine sands, 0 to 3 percent slopes	0.046	0.000	0.000	0.000	0.002	0.049	0.000	0.000	0.022

Appendix K – Soils by Milepost – Steele City Segment

Pipeline Segment	State	County	Beginning Milepost	Ending Milepost	Miles	Soil Series	Soil Series Name	Wind (miles)	Water (miles)	Low revegetation on Potential (miles)	Prime Farmland (miles)	Hydric Soils (miles)	Compaction on Prone (miles)	Stoney – Rocky (miles)	Shallow Bedrock (miles)	Droghty (miles)
Steele City	NE	Wheeler	680.287	680.291	0.003	NE183	Ipage loamy sand, 0 to 3 percent slopes	0.003	0.000	0.000	0.000	0.000	0.003	0.000	0.000	0.003
Steele City	NE	Wheeler	680.291	680.403	0.112	NE183	Blownout land-Valentine complex, 6 to 60 percent slopes	0.110	0.110	0.000	0.000	0.002	0.112	0.000	0.000	0.110
Steele City	NE	Wheeler	680.403	680.571	0.169	NE183	Els-Ipage fine sands, 0 to 3 percent slopes	0.160	0.000	0.000	0.000	0.008	0.169	0.000	0.000	0.076
Steele City	NE	Wheeler	680.571	680.630	0.059	NE183	Ipage loamy sand, 0 to 3 percent slopes	0.057	0.000	0.000	0.000	0.001	0.059	0.000	0.000	0.057
Steele City	NE	Wheeler	680.630	680.743	0.113	NE183	Ipage fine sand, 0 to 3 percent slopes	0.108	0.000	0.000	0.000	0.006	0.113	0.000	0.000	0.108
Steele City	NE	Wheeler	680.743	681.313	0.570	NE183	Valentine fine sand, rolling	0.559	0.559	0.000	0.000	0.011	0.570	0.000	0.000	0.559
Steele City	NE	Wheeler	681.313	681.963	0.650	NE183	Valentine fine sand, rolling and hilly	0.325	0.325	0.000	0.000	0.000	0.650	0.000	0.000	0.325
Steele City	NE	Wheeler	681.963	682.057	0.094	NE183	Valentine fine sand, 3 to 9 percent slopes	0.089	0.000	0.000	0.000	0.005	0.094	0.000	0.000	0.089
Steele City	NE	Wheeler	682.057	682.362	0.305	NE183	Valentine fine sand, rolling and hilly	0.153	0.153	0.000	0.000	0.000	0.305	0.000	0.000	0.153
Steele City	NE	Wheeler	682.362	682.413	0.051	NE183	Valentine fine sand, rolling	0.050	0.050	0.000	0.000	0.001	0.051	0.000	0.000	0.050
Steele City	NE	Wheeler	682.413	682.574	0.161	NE183	Valentine fine sand, rolling and hilly	0.080	0.080	0.000	0.000	0.000	0.161	0.000	0.000	0.080
Steele City	NE	Wheeler	682.574	682.930	0.356	NE183	Valentine fine sand, rolling	0.349	0.349	0.000	0.000	0.007	0.356	0.000	0.000	0.349
Steele City	NE	Wheeler	682.930	683.461	0.531	NE183	Valentine fine sand, rolling and hilly	0.266	0.266	0.000	0.000	0.000	0.531	0.000	0.000	0.266
Steele City	NE	Wheeler	683.461	683.559	0.098	NE183	Valentine fine sand, rolling	0.096	0.096	0.000	0.000	0.002	0.098	0.000	0.000	0.096
Steele City	NE	Wheeler	683.559	683.773	0.214	NE183	Valentine fine sand, rolling and hilly	0.107	0.107	0.000	0.000	0.000	0.214	0.000	0.000	0.107
Steele City	NE	Wheeler	683.773	683.980	0.207	NE183	Valentine fine sand, rolling	0.203	0.203	0.000	0.000	0.004	0.207	0.000	0.000	0.203
Steele City	NE	Wheeler	683.980	684.218	0.238	NE183	Dunday loamy fine sand, 3 to 6 percent slopes	0.238	0.000	0.000	0.000	0.000	0.238	0.000	0.000	0.238
Steele City	NE	Wheeler	684.218	685.182	0.964	NE183	Valentine fine sand, rolling and hilly	0.482	0.482	0.000	0.000	0.000	0.964	0.000	0.000	0.482
Steele City	NE	Wheeler	685.182	685.647	0.465	NE183	Valentine fine sand, rolling	0.456	0.456	0.000	0.000	0.009	0.465	0.000	0.000	0.456
Steele City	NE	Wheeler	685.647	686.322	0.675	NE183	Valentine fine sand, rolling and hilly	0.337	0.337	0.000	0.000	0.000	0.675	0.000	0.000	0.337
Steele City	NE	Wheeler	686.322	686.366	0.044	NE183	Valentine fine sand, rolling	0.043	0.043	0.000	0.000	0.001	0.044	0.000	0.000	0.043
Steele City	NE	Wheeler	686.366	687.209	0.843	NE183	Valentine fine sand, rolling and hilly	0.422	0.422	0.000	0.000	0.000	0.843	0.000	0.000	0.422
Steele City	NE	Wheeler	687.209	687.283	0.074	NE183	Valentine fine sand, rolling	0.072	0.072	0.000	0.000	0.001	0.074	0.000	0.000	0.072
Steele City	NE	Wheeler	687.283	688.752	1.469	NE183	Valentine fine sand, rolling and hilly	0.735	0.735	0.000	0.000	0.000	1.469	0.000	0.000	0.735
Steele City	NE	Wheeler	688.752	688.879	0.127	NE183	Valentine fine sand, rolling	0.124	0.124	0.000	0.000	0.003	0.127	0.000	0.000	0.124
Steele City	NE	Wheeler	688.879	689.876	0.997	NE183	Valentine fine sand, rolling and hilly	0.498	0.498	0.000	0.000	0.000	0.997	0.000	0.000	0.498
Steele City	NE	Wheeler	689.876	689.951	0.076	NE183	Valentine fine sand, rolling	0.074	0.074	0.000	0.000	0.002	0.076	0.000	0.000	0.074
Steele City	NE	Wheeler	689.951	690.133	0.181	NE183	Valentine fine sand, rolling and hilly	0.091	0.091	0.000	0.000	0.000	0.181	0.000	0.000	0.091
Steele City	NE	Wheeler	690.133	690.230	0.098	NE183	Valentine fine sand, rolling	0.096	0.096	0.000	0.000	0.002	0.098	0.000	0.000	0.096
Steele City	NE	Wheeler	690.230	690.648	0.418	NE183	Valentine fine sand, rolling and hilly	0.209	0.209	0.000	0.000	0.000	0.418	0.000	0.000	0.209
Steele City	NE	Wheeler	690.648	690.778	0.130	NE183	Valentine fine sand, rolling	0.127	0.127	0.000	0.000	0.003	0.130	0.000	0.000	0.127
Steele City	NE	Wheeler	690.778	691.030	0.252	NE183	Valentine fine sand, rolling and hilly	0.126	0.126	0.000	0.000	0.000	0.252	0.000	0.000	0.126
Steele City	NE	Wheeler	691.030	691.149	0.119	NE183	Boelus loamy sand, 0 to 3 percent slopes	0.119	0.000	0.000	0.000	0.000	0.119	0.000	0.000	0.119
Steele City	NE	Wheeler	691.149	691.263	0.114	NE183	Valentine fine sand, rolling	0.112	0.112	0.000	0.000	0.002	0.114	0.000	0.000	0.112
Steele City	NE	Wheeler	691.263	691.478	0.215	NE183	Valentine fine sand, rolling and hilly	0.107	0.107	0.000	0.000	0.000	0.215	0.000	0.000	0.107
Steele City	NE	Wheeler	691.478	691.658	0.179	NE183	Valentine fine sand, rolling	0.176	0.176	0.000	0.000	0.004	0.179	0.000	0.000	0.176
Steele City	NE	Wheeler	691.658	691.911	0.254	NE183	Valentine fine sand, rolling and hilly	0.127	0.127	0.000	0.000	0.000	0.254	0.000	0.000	0.127
Steele City	NE	Wheeler	691.911	692.012	0.101	NE183	Boelus loamy sand, 0 to 3 percent slopes	0.101	0.000	0.000	0.000	0.000	0.101	0.000	0.000	0.101
Steele City	NE	Wheeler	692.012	692.090	0.078	NE183	Valentine fine sand, rolling	0.077	0.077	0.000	0.000	0.002	0.078	0.000	0.000	0.077
Steele City	NE	Wheeler	692.090	692.734	0.645	NE183	Valentine fine sand, rolling and hilly	0.322	0.322	0.000	0.000	0.000	0.645	0.000	0.000	0.322
Steele City	NE	Wheeler	692.734	693.130	0.396	NE183	Valentine fine sand, 3 to 9 percent slopes	0.376	0.000	0.000	0.000	0.020	0.396	0.000	0.000	0.376
Steele City	NE	Wheeler	693.130	693.257	0.127	NE183	Valentine fine sand, rolling and hilly	0.063	0.063	0.000	0.000	0.000	0.127	0.000	0.000	0.063
Steele City	NE	Wheeler	693.257	693.400	0.143	NE183	Valentine fine sand, rolling	0.140	0.140	0.000	0.000	0.003	0.143	0.000	0.000	0.140
Steele City	NE	Wheeler	693.400	693.650	0.250	NE183	Valentine fine sand, rolling and hilly	0.125	0.125	0.000	0.000	0.000	0.250	0.000	0.000	0.125

Appendix K – Soils by Milepost – Steele City Segment

Pipeline Segment	State	County	Beginning Milepost	Ending Milepost	Miles	Soil Series	Soil Series Name	Wind (miles)	Water (miles)	Low revegetation on Potential (miles)	Prime Farmland (miles)	Hydric Soils (miles)	Compaction on Prone (miles)	Stoney – Rocky (miles)	Shallow Bedrock (miles)	Droghty (miles)
Steele City	NE	Wheeler	693.650	693.735	0.085	NE183	Valentine fine sand, rolling	0.083	0.083	0.000	0.000	0.002	0.085	0.000	0.000	0.083
Steele City	NE	Wheeler	693.735	693.825	0.091	NE183	Valentine fine sand, rolling and hilly	0.045	0.045	0.000	0.000	0.000	0.091	0.000	0.000	0.045
Steele City	NE	Wheeler	693.825	694.054	0.229	NE183	Ipage fine sand, 0 to 3 percent slopes	0.217	0.000	0.000	0.000	0.011	0.229	0.000	0.000	0.217
Steele City	NE	Wheeler	694.054	694.253	0.199	NE183	Valentine fine sand, 3 to 9 percent slopes	0.189	0.000	0.000	0.000	0.010	0.199	0.000	0.000	0.189
Steele City	NE	Wheeler	694.253	694.285	0.032	NE183	Valentine fine sand, rolling	0.032	0.032	0.000	0.000	0.001	0.032	0.000	0.000	0.032
Steele City	NE	Wheeler	694.285	694.325	0.040	NE183	Ipage fine sand, 0 to 3 percent slopes	0.038	0.000	0.000	0.000	0.002	0.040	0.000	0.000	0.038
Steele City	NE	Wheeler	694.325	694.377	0.053	NE183	Valentine fine sand, rolling	0.052	0.052	0.000	0.000	0.001	0.053	0.000	0.000	0.052
Steele City	NE	Wheeler	694.377	694.432	0.055	NE183	Els-Ipage fine sands, 0 to 3 percent slopes	0.052	0.000	0.000	0.000	0.003	0.055	0.000	0.000	0.025
Steele City	NE	Wheeler	694.432	694.550	0.118	NE183	Ipage fine sand, 0 to 3 percent slopes	0.112	0.000	0.000	0.000	0.006	0.118	0.000	0.000	0.112
Steele City	NE	Wheeler	694.550	694.964	0.414	NE183	Els-Ipage fine sands, 0 to 3 percent slopes	0.393	0.000	0.000	0.000	0.021	0.414	0.000	0.000	0.186
Steele City	NE	Wheeler	694.964	695.018	0.053	NE183	Valentine fine sand, 0 to 3 percent slopes	0.051	0.000	0.000	0.000	0.003	0.053	0.000	0.000	0.051
Steele City	NE	Wheeler	695.018	695.236	0.219	NE183	Els-Ipage fine sands, 0 to 3 percent slopes	0.208	0.000	0.000	0.000	0.011	0.219	0.000	0.000	0.098
Steele City	NE	Wheeler	695.236	695.266	0.030	NE183	Tryon-Inavale complex, channeled	0.011	0.000	0.018	0.000	0.019	0.030	0.000	0.000	0.011
Steele City	NE	Wheeler	695.266	695.290	0.024	NE183	Water	0.000	0.000	0.000	0.000	0.000	0.024	0.000	0.000	0.000
Steele City	NE	Wheeler	695.290	695.431	0.141	NE183	Valentine fine sand, 0 to 3 percent slopes	0.134	0.000	0.000	0.000	0.007	0.141	0.000	0.000	0.134
Steele City	NE	Wheeler	695.431	695.680	0.249	NE183	Libory loamy fine sand, 0 to 3 percent slopes	0.249	0.000	0.000	0.000	0.000	0.249	0.000	0.000	0.249
Steele City	NE	Wheeler	695.680	695.824	0.144	NE183	Ipage fine sand, 0 to 3 percent slopes	0.137	0.000	0.000	0.000	0.007	0.144	0.000	0.000	0.137
Steele City	NE	Wheeler	695.824	695.855	0.031	NE183	Valentine fine sand, rolling	0.030	0.030	0.000	0.000	0.001	0.031	0.000	0.000	0.030
Steele City	NE	Wheeler	695.855	696.010	0.155	NE183	Valentine fine sand, 3 to 9 percent slopes	0.147	0.000	0.000	0.000	0.008	0.155	0.000	0.000	0.147
Steele City	NE	Wheeler	696.010	696.140	0.130	NE183	Valentine fine sand, rolling	0.127	0.127	0.000	0.000	0.003	0.130	0.000	0.000	0.127
Steele City	NE	Wheeler	696.140	696.378	0.239	NE183	Valentine fine sand, 3 to 9 percent slopes	0.227	0.000	0.000	0.000	0.012	0.239	0.000	0.000	0.227
Steele City	NE	Greeley	696.377	696.427	0.050	NE077	Valentine fine sand, 3 to 9 percent slopes	0.050	0.000	0.000	0.000	0.000	0.050	0.000	0.000	0.050
Steele City	NE	Greeley	696.427	696.476	0.049	NE077	Valentine fine sand, rolling	0.049	0.049	0.000	0.000	0.000	0.049	0.000	0.000	0.049
Steele City	NE	Greeley	696.476	696.511	0.035	NE077	Valentine fine sand, 3 to 9 percent slopes	0.035	0.000	0.000	0.000	0.000	0.035	0.000	0.000	0.035
Steele City	NE	Greeley	696.511	696.719	0.209	NE077	Valentine fine sand, rolling	0.209	0.209	0.000	0.000	0.000	0.209	0.000	0.000	0.209
Steele City	NE	Greeley	696.719	696.738	0.019	NE077	Valentine fine sand, 3 to 9 percent slopes	0.019	0.000	0.000	0.000	0.000	0.019	0.000	0.000	0.019
Steele City	NE	Greeley	696.738	696.752	0.014	NE077	Valentine fine sand, rolling	0.014	0.014	0.000	0.000	0.000	0.014	0.000	0.000	0.014
Steele City	NE	Greeley	696.752	696.861	0.109	NE077	Valentine fine sand, 3 to 9 percent slopes	0.109	0.000	0.000	0.000	0.000	0.109	0.000	0.000	0.109
Steele City	NE	Greeley	696.861	697.111	0.249	NE077	Valentine fine sand, rolling	0.249	0.249	0.000	0.000	0.000	0.249	0.000	0.000	0.249
Steele City	NE	Greeley	697.111	697.233	0.122	NE077	Ipage fine sand, 0 to 3 percent slopes	0.121	0.000	0.000	0.000	0.001	0.122	0.000	0.000	0.121
Steele City	NE	Greeley	697.233	697.348	0.115	NE077	Valentine fine sand, rolling	0.115	0.115	0.000	0.000	0.000	0.115	0.000	0.000	0.115
Steele City	NE	Greeley	697.348	697.403	0.055	NE077	Ipage fine sand, 0 to 3 percent slopes	0.054	0.000	0.000	0.000	0.001	0.055	0.000	0.000	0.054
Steele City	NE	Greeley	697.403	697.590	0.188	NE077	Valentine fine sand, rolling	0.188	0.188	0.000	0.000	0.000	0.188	0.000	0.000	0.188
Steele City	NE	Greeley	697.590	697.688	0.097	NE077	Valentine fine sand, rolling and hilly	0.049	0.049	0.000	0.000	0.000	0.097	0.000	0.000	0.049
Steele City	NE	Greeley	697.688	697.742	0.054	NE077	Valentine fine sand, rolling	0.054	0.054	0.000	0.000	0.000	0.054	0.000	0.000	0.054
Steele City	NE	Greeley	697.742	697.807	0.065	NE077	Valentine fine sand, rolling and hilly	0.033	0.033	0.000	0.000	0.000	0.065	0.000	0.000	0.033
Steele City	NE	Greeley	697.807	698.214	0.407	NE077	Valentine fine sand, rolling	0.407	0.407	0.000	0.000	0.000	0.407	0.000	0.000	0.407
Steele City	NE	Greeley	698.214	698.728	0.515	NE077	Valentine fine sand, rolling and hilly	0.257	0.257	0.000	0.000	0.000	0.515	0.000	0.000	0.257
Steele City	NE	Greeley	698.728	698.816	0.088	NE077	Valentine fine sand, rolling	0.088	0.088	0.000	0.000	0.000	0.088	0.000	0.000	0.088
Steele City	NE	Greeley	698.816	699.203	0.387	NE077	Valentine fine sand, rolling and hilly	0.193	0.193	0.000	0.000	0.000	0.387	0.000	0.000	0.193
Steele City	NE	Greeley	699.203	699.315	0.112	NE077	Valentine fine sand, rolling	0.112	0.112	0.000	0.000	0.000	0.112	0.000	0.000	0.112
Steele City	NE	Greeley	699.315	699.402	0.087	NE077	Valentine fine sand, rolling and hilly	0.044	0.044	0.000	0.000	0.000	0.087	0.000	0.000	0.044
Steele City	NE	Greeley	699.402	699.536	0.133	NE077	Valentine fine sand, rolling	0.133	0.133	0.000	0.000	0.000	0.133	0.000	0.000	0.133
Steele City	NE	Greeley	699.536	700.242	0.706	NE077	Valentine fine sand, rolling and hilly	0.353	0.353	0.000	0.000	0.000	0.706	0.000	0.000	0.353

Appendix K – Soils by Milepost – Steele City Segment

Pipeline Segment	State	County	Beginning Milepost	Ending Milepost	Miles	Soil Series	Soil Series Name	Wind (miles)	Water (miles)	Low revegetation on Potential (miles)	Prime Farmland (miles)	Hydric Soils (miles)	Compaction on Prone (miles)	Stoney – Rocky (miles)	Shallow Bedrock (miles)	Droghty (miles)
Steele City	NE	Greeley	700.242	700.386	0.144	NE077	Valentine fine sand, rolling	0.144	0.144	0.000	0.000	0.000	0.144	0.000	0.000	0.144
Steele City	NE	Greeley	700.386	700.440	0.054	NE077	Valentine fine sand, rolling and hilly	0.027	0.027	0.000	0.000	0.000	0.054	0.000	0.000	0.027
Steele City	NE	Greeley	700.440	700.561	0.121	NE077	Valentine fine sand, rolling	0.121	0.121	0.000	0.000	0.000	0.121	0.000	0.000	0.121
Steele City	NE	Greeley	700.561	700.720	0.160	NE077	Valentine fine sand, rolling and hilly	0.080	0.080	0.000	0.000	0.000	0.160	0.000	0.000	0.080
Steele City	NE	Greeley	700.720	700.843	0.122	NE077	Valentine fine sand, rolling	0.122	0.122	0.000	0.000	0.000	0.122	0.000	0.000	0.122
Steele City	NE	Greeley	700.843	701.044	0.202	NE077	Valentine fine sand, rolling and hilly	0.101	0.101	0.000	0.000	0.000	0.202	0.000	0.000	0.101
Steele City	NE	Greeley	701.044	701.111	0.066	NE077	Valentine fine sand, rolling	0.066	0.066	0.000	0.000	0.000	0.066	0.000	0.000	0.066
Steele City	NE	Greeley	701.111	701.259	0.149	NE077	Valentine fine sand, rolling and hilly	0.074	0.074	0.000	0.000	0.000	0.149	0.000	0.000	0.074
Steele City	NE	Greeley	701.259	701.326	0.067	NE077	Gates-Hersh complex, 0 to 3 percent slopes	0.047	0.000	0.000	0.000	0.000	0.067	0.000	0.000	0.067
Steele City	NE	Greeley	701.326	701.426	0.100	NE077	Valentine fine sand, rolling	0.100	0.100	0.000	0.000	0.000	0.100	0.000	0.000	0.100
Steele City	NE	Greeley	701.426	701.546	0.119	NE077	Valentine fine sand, rolling and hilly	0.060	0.060	0.000	0.000	0.000	0.119	0.000	0.000	0.060
Steele City	NE	Greeley	701.546	701.641	0.096	NE077	Gates-Hersh complex, 0 to 3 percent slopes	0.067	0.000	0.000	0.000	0.000	0.096	0.000	0.000	0.096
Steele City	NE	Greeley	701.641	701.760	0.119	NE077	Valentine fine sand, rolling	0.119	0.119	0.000	0.000	0.000	0.119	0.000	0.000	0.119
Steele City	NE	Greeley	701.760	702.064	0.303	NE077	Valentine fine sand, rolling and hilly	0.152	0.152	0.000	0.000	0.000	0.303	0.000	0.000	0.152
Steele City	NE	Greeley	702.064	702.117	0.053	NE077	Valentine fine sand, rolling	0.053	0.053	0.000	0.000	0.000	0.053	0.000	0.000	0.053
Steele City	NE	Greeley	702.117	702.378	0.261	NE077	Valentine fine sand, rolling and hilly	0.131	0.131	0.000	0.000	0.000	0.261	0.000	0.000	0.131
Steele City	NE	Greeley	702.378	702.415	0.037	NE077	Valentine fine sand, rolling	0.037	0.037	0.000	0.000	0.000	0.037	0.000	0.000	0.037
Steele City	NE	Greeley	702.415	702.613	0.199	NE077	Valentine fine sand, rolling and hilly	0.099	0.099	0.000	0.000	0.000	0.199	0.000	0.000	0.099
Steele City	NE	Greeley	702.613	702.662	0.049	NE077	Valentine fine sand, rolling	0.049	0.049	0.000	0.000	0.000	0.049	0.000	0.000	0.049
Steele City	NE	Greeley	702.662	702.793	0.131	NE077	Valentine fine sand, rolling and hilly	0.065	0.065	0.000	0.000	0.000	0.131	0.000	0.000	0.065
Steele City	NE	Greeley	702.793	703.139	0.346	NE077	Valentine fine sand, rolling	0.346	0.346	0.000	0.000	0.000	0.346	0.000	0.000	0.346
Steele City	NE	Greeley	703.139	703.288	0.149	NE077	Valentine fine sand, rolling and hilly	0.075	0.075	0.000	0.000	0.000	0.149	0.000	0.000	0.075
Steele City	NE	Greeley	703.288	703.419	0.132	NE077	Valentine fine sand, rolling	0.132	0.132	0.000	0.000	0.000	0.132	0.000	0.000	0.132
Steele City	NE	Greeley	703.419	703.620	0.201	NE077	Valentine fine sand, rolling and hilly	0.100	0.100	0.000	0.000	0.000	0.201	0.000	0.000	0.100
Steele City	NE	Greeley	703.620	703.751	0.132	NE077	Valentine fine sand, rolling	0.132	0.132	0.000	0.000	0.000	0.132	0.000	0.000	0.132
Steele City	NE	Greeley	703.751	703.858	0.107	NE077	Valentine fine sand, rolling and hilly	0.053	0.053	0.000	0.000	0.000	0.107	0.000	0.000	0.053
Steele City	NE	Greeley	703.858	703.860	0.002	NE077	Valentine fine sand, rolling	0.002	0.002	0.000	0.000	0.000	0.002	0.000	0.000	0.002
Steele City	NE	Greeley	703.860	703.904	0.044	NE077	Gates-Hersh complex, 0 to 3 percent slopes	0.031	0.000	0.000	0.000	0.000	0.044	0.000	0.000	0.044
Steele City	NE	Greeley	703.904	704.281	0.377	NE077	Valentine fine sand, rolling	0.377	0.377	0.000	0.000	0.000	0.377	0.000	0.000	0.377
Steele City	NE	Greeley	704.281	704.433	0.152	NE077	Valentine fine sand, rolling and hilly	0.076	0.076	0.000	0.000	0.000	0.152	0.000	0.000	0.076
Steele City	NE	Greeley	704.433	704.512	0.080	NE077	Valentine fine sand, rolling	0.080	0.080	0.000	0.000	0.000	0.080	0.000	0.000	0.080
Steele City	NE	Greeley	704.512	704.715	0.203	NE077	Gates-Hersh complex, 0 to 3 percent slopes	0.142	0.000	0.000	0.000	0.000	0.203	0.000	0.000	0.203
Steele City	NE	Greeley	704.715	705.013	0.297	NE077	Valentine fine sand, rolling	0.297	0.297	0.000	0.000	0.000	0.297	0.000	0.000	0.297
Steele City	NE	Greeley	705.013	705.231	0.219	NE077	Valentine fine sand, rolling and hilly	0.109	0.109	0.000	0.000	0.000	0.219	0.000	0.000	0.109
Steele City	NE	Greeley	705.231	705.346	0.114	NE077	Gates-Hersh complex, 0 to 3 percent slopes	0.080	0.000	0.000	0.000	0.000	0.114	0.000	0.000	0.114
Steele City	NE	Greeley	705.346	705.389	0.043	NE077	Valentine fine sand, rolling	0.043	0.043	0.000	0.000	0.000	0.043	0.000	0.000	0.043
Steele City	NE	Greeley	705.389	705.432	0.043	NE077	Gates-Hersh complex, 0 to 3 percent slopes	0.030	0.000	0.000	0.000	0.000	0.043	0.000	0.000	0.043
Steele City	NE	Greeley	705.432	706.386	0.954	NE077	Valentine fine sand, rolling	0.954	0.954	0.000	0.000	0.000	0.954	0.000	0.000	0.954
Steele City	NE	Greeley	706.386	706.468	0.081	NE077	Cass fine sandy loam, 0 to 2 percent slopes	0.000	0.000	0.000	0.000	0.000	0.081	0.000	0.000	0.000
Steele City	NE	Greeley	706.468	706.974	0.507	NE077	Valentine fine sand, rolling	0.507	0.507	0.000	0.000	0.000	0.507	0.000	0.000	0.507
Steele City	NE	Greeley	706.974	706.999	0.024	NE077	Gates silt loam, 3 to 6 percent slopes, eroded	0.000	0.000	0.000	0.000	0.000	0.024	0.000	0.000	0.024
Steele City	NE	Greeley	706.999	707.259	0.261	NE077	Valentine fine sand, rolling	0.261	0.261	0.000	0.000	0.000	0.261	0.000	0.000	0.261
Steele City	NE	Greeley	707.259	707.288	0.029	NE077	Valentine loamy fine sand, 3 to 9 percent slopes	0.029	0.000	0.000	0.000	0.000	0.029	0.000	0.000	0.029
Steele City	NE	Greeley	707.288	707.372	0.083	NE077	Hersh-Gates complex, 15 to 30 percent slopes	0.000	0.083	0.000	0.000	0.000	0.083	0.000	0.000	0.083

Appendix K – Soils by Milepost – Steele City Segment

Pipeline Segment	State	County	Beginning Milepost	Ending Milepost	Miles	Soil Series	Soil Series Name	Wind (miles)	Water (miles)	Low revegetation on Potential (miles)	Prime Farmland (miles)	Hydric Soils (miles)	Compaction on Prone (miles)	Stoney – Rocky (miles)	Shallow Bedrock (miles)	Droghty (miles)
Steele City	NE	Greeley	707.372	707.409	0.037	NE077	Gates silt loam, 3 to 6 percent slopes, eroded	0.000	0.000	0.000	0.000	0.000	0.037	0.000	0.000	0.037
Steele City	NE	Greeley	707.409	707.499	0.090	NE077	Hersh fine sandy loam, 6 to 11 percent slopes	0.000	0.000	0.000	0.000	0.000	0.090	0.000	0.000	0.090
Steele City	NE	Greeley	707.499	707.746	0.247	NE077	Gates silt loam, 3 to 6 percent slopes, eroded	0.000	0.000	0.000	0.000	0.000	0.247	0.000	0.000	0.247
Steele City	NE	Greeley	707.746	708.058	0.312	NE077	Coly-Hobbs silt loams, 2 to 60 percent slopes	0.000	0.250	0.000	0.000	0.003	0.312	0.000	0.000	0.000
Steele City	NE	Greeley	708.058	708.203	0.146	NE077	Uly-Coly silt loams, 6 to 11 percent slopes, eroded	0.000	0.146	0.000	0.000	0.000	0.146	0.000	0.000	0.000
Steele City	NE	Greeley	708.203	708.458	0.255	NE077	Hord silt loam, terrace, 1 to 3 percent slopes	0.000	0.000	0.000	0.000	0.003	0.255	0.000	0.000	0.000
Steele City	NE	Greeley	708.458	708.508	0.050	NE077	Hobbs silt loam, 0 to 2 percent slopes	0.000	0.000	0.000	0.000	0.000	0.050	0.000	0.000	0.000
Steele City	NE	Greeley	708.508	708.538	0.030	NE077	Hord silt loam, terrace, 1 to 3 percent slopes	0.000	0.000	0.000	0.000	0.000	0.030	0.000	0.000	0.000
Steele City	NE	Greeley	708.538	708.808	0.270	NE077	Coly-Uly silt loams, 11 to 17 percent slopes, eroded	0.000	0.270	0.000	0.000	0.000	0.270	0.000	0.000	0.000
Steele City	NE	Greeley	708.808	708.979	0.171	NE077	Uly-Coly silt loams, 6 to 11 percent slopes, eroded	0.000	0.171	0.000	0.000	0.000	0.171	0.000	0.000	0.000
Steele City	NE	Greeley	708.979	709.040	0.060	NE077	Coly-Uly silt loams, 11 to 17 percent slopes, eroded	0.000	0.060	0.000	0.000	0.000	0.060	0.000	0.000	0.000
Steele City	NE	Greeley	709.040	709.088	0.048	NE077	Uly-Coly silt loams, 15 to 30 percent slopes	0.000	0.048	0.000	0.000	0.000	0.048	0.000	0.000	0.000
Steele City	NE	Greeley	709.088	709.108	0.020	NE077	Coly-Uly silt loams, 11 to 17 percent slopes, eroded	0.000	0.020	0.000	0.000	0.000	0.020	0.000	0.000	0.000
Steele City	NE	Greeley	709.108	709.137	0.030	NE077	Uly-Coly silt loams, 6 to 11 percent slopes, eroded	0.000	0.030	0.000	0.000	0.000	0.030	0.000	0.000	0.000
Steele City	NE	Greeley	709.137	709.148	0.011	NE077	Coly-Uly silt loams, 11 to 17 percent slopes, eroded	0.000	0.011	0.000	0.000	0.000	0.011	0.000	0.000	0.000
Steele City	NE	Greeley	709.148	709.208	0.059	NE077	Uly-Coly silt loams, 15 to 30 percent slopes	0.000	0.059	0.000	0.000	0.000	0.059	0.000	0.000	0.000
Steele City	NE	Greeley	709.208	709.399	0.191	NE077	Uly-Coly silt loams, 6 to 11 percent slopes, eroded	0.000	0.191	0.000	0.000	0.000	0.191	0.000	0.000	0.000
Steele City	NE	Greeley	709.399	709.432	0.033	NE077	Uly-Coly silt loams, 15 to 30 percent slopes	0.000	0.033	0.000	0.000	0.000	0.033	0.000	0.000	0.000
Steele City	NE	Greeley	709.432	709.442	0.009	NE077	Uly-Coly silt loams, 6 to 11 percent slopes, eroded	0.000	0.009	0.000	0.000	0.000	0.009	0.000	0.000	0.000
Steele City	NE	Greeley	709.442	709.633	0.191	NE077	Uly-Coly silt loams, 15 to 30 percent slopes	0.000	0.191	0.000	0.000	0.000	0.191	0.000	0.000	0.000
Steele City	NE	Greeley	709.633	710.033	0.400	NE077	Uly-Coly silt loams, 6 to 11 percent slopes, eroded	0.000	0.400	0.000	0.000	0.000	0.400	0.000	0.000	0.000
Steele City	NE	Greeley	710.033	710.131	0.098	NE077	Coly-Uly silt loams, 11 to 17 percent slopes, eroded	0.000	0.098	0.000	0.000	0.000	0.098	0.000	0.000	0.000
Steele City	NE	Greeley	710.131	710.232	0.102	NE077	Uly-Coly silt loams, 15 to 30 percent slopes	0.000	0.102	0.000	0.000	0.000	0.102	0.000	0.000	0.000
Steele City	NE	Greeley	710.232	710.302	0.070	NE077	Uly-Coly silt loams, 6 to 11 percent slopes, eroded	0.000	0.070	0.000	0.000	0.000	0.070	0.000	0.000	0.000
Steele City	NE	Greeley	710.302	710.360	0.058	NE077	Uly-Coly silt loams, 15 to 30 percent slopes	0.000	0.058	0.000	0.000	0.000	0.058	0.000	0.000	0.000
Steele City	NE	Greeley	710.360	710.375	0.014	NE077	Uly-Coly silt loams, 6 to 11 percent slopes, eroded	0.000	0.014	0.000	0.000	0.000	0.014	0.000	0.000	0.000
Steele City	NE	Greeley	710.375	710.405	0.030	NE077	Uly-Coly silt loams, 15 to 30 percent slopes	0.000	0.030	0.000	0.000	0.000	0.030	0.000	0.000	0.000
Steele City	NE	Greeley	710.405	710.461	0.056	NE077	Uly-Coly silt loams, 6 to 11 percent slopes, eroded	0.000	0.056	0.000	0.000	0.000	0.056	0.000	0.000	0.000
Steele City	NE	Greeley	710.461	710.538	0.077	NE077	Uly-Coly silt loams, 15 to 30 percent slopes	0.000	0.077	0.000	0.000	0.000	0.077	0.000	0.000	0.000
Steele City	NE	Greeley	710.538	710.573	0.035	NE077	Uly-Coly silt loams, 6 to 11 percent slopes, eroded	0.000	0.035	0.000	0.000	0.000	0.035	0.000	0.000	0.000
Steele City	NE	Greeley	710.573	710.929	0.356	NE077	Uly-Coly silt loams, 15 to 30 percent slopes	0.000	0.356	0.000	0.000	0.000	0.356	0.000	0.000	0.000
Steele City	NE	Greeley	710.929	711.010	0.081	NE077	Holdrege silty clay loam, 3 to 6 percent slopes, eroded	0.000	0.000	0.000	0.000	0.000	0.081	0.000	0.000	0.000
Steele City	NE	Greeley	711.010	711.042	0.032	NE077	Uly-Coly silt loams, 15 to 30 percent slopes	0.000	0.032	0.000	0.000	0.000	0.032	0.000	0.000	0.000
Steele City	NE	Greeley	711.042	711.113	0.071	NE077	Holdrege silty clay loam, 3 to 6 percent slopes, eroded	0.000	0.000	0.000	0.000	0.000	0.071	0.000	0.000	0.000
Steele City	NE	Greeley	711.113	711.176	0.063	NE077	Uly-Coly silt loams, 15 to 30 percent slopes	0.000	0.063	0.000	0.000	0.000	0.063	0.000	0.000	0.000
Steele City	NE	Greeley	711.176	711.275	0.099	NE077	Coly-Uly silt loams, 11 to 17 percent slopes, eroded	0.000	0.099	0.000	0.000	0.000	0.099	0.000	0.000	0.000
Steele City	NE	Greeley	711.275	711.291	0.016	NE077	Uly-Coly silt loams, 15 to 30 percent slopes	0.000	0.016	0.000	0.000	0.000	0.016	0.000	0.000	0.000
Steele City	NE	Greeley	711.291	711.345	0.054	NE077	Coly-Uly silt loams, 11 to 17 percent slopes, eroded	0.000	0.054	0.000	0.000	0.000	0.054	0.000	0.000	0.000
Steele City	NE	Greeley	711.345	711.687	0.342	NE077	Uly-Coly silt loams, 15 to 30 percent slopes	0.000	0.342	0.000	0.000	0.000	0.342	0.000	0.000	0.000
Steele City	NE	Greeley	711.687	711.760	0.073	NE077	Coly-Uly silt loams, 11 to 17 percent slopes, eroded	0.000	0.073	0.000	0.000	0.000	0.073	0.000	0.000	0.000
Steele City	NE	Greeley	711.760	712.002	0.242	NE077	Uly-Coly silt loams, 15 to 30 percent slopes	0.000	0.242	0.000	0.000	0.000	0.242	0.000	0.000	0.000
Steele City	NE	Greeley	712.002	712.086	0.084	NE077	Uly silt loam, 6 to 11 percent slopes	0.000	0.084	0.000	0.000	0.000	0.084	0.000	0.000	0.000
Steele City	NE	Greeley	712.086	712.088	0.003	NE077	Uly-Coly silt loams, 15 to 30 percent slopes	0.000	0.003	0.000	0.000	0.000	0.003	0.000	0.000	0.000

Appendix K – Soils by Milepost – Steele City Segment

Pipeline Segment	State	County	Beginning Milepost	Ending Milepost	Miles	Soil Series	Soil Series Name	Wind (miles)	Water (miles)	Low revegetation on Potential (miles)	Prime Farmland (miles)	Hydric Soils (miles)	Compaction on Prone (miles)	Stoney – Rocky (miles)	Shallow Bedrock (miles)	Droghty (miles)
Steele City	NE	Greeley	712.088	712.149	0.061	NE077	Uly silt loam, 6 to 11 percent slopes	0.000	0.061	0.000	0.000	0.000	0.061	0.000	0.000	0.000
Steele City	NE	Greeley	712.149	712.347	0.199	NE077	Uly-Coly silt loams, 15 to 30 percent slopes	0.000	0.199	0.000	0.000	0.000	0.199	0.000	0.000	0.000
Steele City	NE	Greeley	712.347	712.471	0.124	NE077	Uly silt loam, 6 to 11 percent slopes	0.000	0.124	0.000	0.000	0.000	0.124	0.000	0.000	0.000
Steele City	NE	Greeley	712.471	712.603	0.132	NE077	Uly-Coly silt loams, 15 to 30 percent slopes	0.000	0.132	0.000	0.000	0.000	0.132	0.000	0.000	0.000
Steele City	NE	Greeley	712.603	712.677	0.073	NE077	Uly silt loam, 6 to 11 percent slopes	0.000	0.073	0.000	0.000	0.000	0.073	0.000	0.000	0.000
Steele City	NE	Greeley	712.677	712.907	0.230	NE077	Uly-Coly silt loams, 15 to 30 percent slopes	0.000	0.230	0.000	0.000	0.000	0.230	0.000	0.000	0.000
Steele City	NE	Greeley	712.907	712.966	0.059	NE077	Uly silt loam, 6 to 11 percent slopes	0.000	0.059	0.000	0.000	0.000	0.059	0.000	0.000	0.000
Steele City	NE	Greeley	712.966	713.026	0.060	NE077	Uly-Coly silt loams, 15 to 30 percent slopes	0.000	0.060	0.000	0.000	0.000	0.060	0.000	0.000	0.000
Steele City	NE	Greeley	713.026	713.204	0.178	NE077	Hall silt loam, 1 to 3 percent slopes	0.000	0.000	0.000	0.000	0.004	0.178	0.000	0.000	0.000
Steele City	NE	Greeley	713.204	713.258	0.053	NE077	Uly-Coly silt loams, 15 to 30 percent slopes	0.000	0.053	0.000	0.000	0.000	0.053	0.000	0.000	0.000
Steele City	NE	Greeley	713.258	713.307	0.049	NE077	Uly silt loam, 6 to 11 percent slopes	0.000	0.049	0.000	0.000	0.000	0.049	0.000	0.000	0.000
Steele City	NE	Greeley	713.307	713.470	0.163	NE077	Uly-Coly silt loams, 15 to 30 percent slopes	0.000	0.163	0.000	0.000	0.000	0.163	0.000	0.000	0.000
Steele City	NE	Greeley	713.470	713.506	0.036	NE077	Uly silt loam, 6 to 11 percent slopes	0.000	0.036	0.000	0.000	0.000	0.036	0.000	0.000	0.000
Steele City	NE	Greeley	713.506	713.542	0.036	NE077	Uly-Coly silt loams, 15 to 30 percent slopes	0.000	0.036	0.000	0.000	0.000	0.036	0.000	0.000	0.000
Steele City	NE	Greeley	713.542	713.586	0.044	NE077	Uly silt loam, 6 to 11 percent slopes	0.000	0.044	0.000	0.000	0.000	0.044	0.000	0.000	0.000
Steele City	NE	Greeley	713.586	713.706	0.120	NE077	Uly-Coly silt loams, 15 to 30 percent slopes	0.000	0.120	0.000	0.000	0.000	0.120	0.000	0.000	0.000
Steele City	NE	Greeley	713.706	713.880	0.174	NE077	Uly silt loam, 6 to 11 percent slopes	0.000	0.174	0.000	0.000	0.000	0.174	0.000	0.000	0.000
Steele City	NE	Greeley	713.880	713.930	0.049	NE077	Uly-Coly silt loams, 15 to 30 percent slopes	0.000	0.049	0.000	0.000	0.000	0.049	0.000	0.000	0.000
Steele City	NE	Greeley	713.930	714.000	0.070	NE077	Uly-Coly silt loams, 6 to 11 percent slopes, eroded	0.000	0.070	0.000	0.000	0.000	0.070	0.000	0.000	0.000
Steele City	NE	Greeley	714.000	714.113	0.113	NE077	Coly-Uly silt loams, 11 to 17 percent slopes, eroded	0.000	0.113	0.000	0.000	0.000	0.113	0.000	0.000	0.000
Steele City	NE	Greeley	714.113	714.155	0.042	NE077	Uly silt loam, 6 to 11 percent slopes	0.000	0.042	0.000	0.000	0.000	0.042	0.000	0.000	0.000
Steele City	NE	Greeley	714.155	714.235	0.080	NE077	Uly-Coly silt loams, 15 to 30 percent slopes	0.000	0.080	0.000	0.000	0.000	0.080	0.000	0.000	0.000
Steele City	NE	Greeley	714.235	714.281	0.046	NE077	Uly silt loam, 6 to 11 percent slopes	0.000	0.046	0.000	0.000	0.000	0.046	0.000	0.000	0.000
Steele City	NE	Greeley	714.281	714.376	0.096	NE077	Uly-Coly silt loams, 15 to 30 percent slopes	0.000	0.096	0.000	0.000	0.000	0.096	0.000	0.000	0.000
Steele City	NE	Greeley	714.376	714.450	0.074	NE077	Uly-Coly silt loams, 6 to 11 percent slopes, eroded	0.000	0.074	0.000	0.000	0.000	0.074	0.000	0.000	0.000
Steele City	NE	Greeley	714.450	714.480	0.030	NE077	Hall silt loam, 1 to 3 percent slopes	0.000	0.000	0.000	0.000	0.001	0.030	0.000	0.000	0.000
Steele City	NE	Greeley	714.480	714.509	0.029	NE077	Uly-Coly silt loams, 6 to 11 percent slopes, eroded	0.000	0.029	0.000	0.000	0.000	0.029	0.000	0.000	0.000
Steele City	NE	Greeley	714.509	714.561	0.052	NE077	Uly silt loam, 11 to 17 percent slopes	0.000	0.052	0.000	0.000	0.000	0.052	0.000	0.000	0.000
Steele City	NE	Greeley	714.561	714.639	0.078	NE077	Uly-Coly silt loams, 15 to 30 percent slopes	0.000	0.078	0.000	0.000	0.000	0.078	0.000	0.000	0.000
Steele City	NE	Greeley	714.639	714.653	0.013	NE077	Holdrege silt loam, 3 to 6 percent slopes	0.000	0.000	0.000	0.000	0.000	0.013	0.000	0.000	0.000
Steele City	NE	Greeley	714.653	714.674	0.021	NE077	Uly-Coly silt loams, 15 to 30 percent slopes	0.000	0.021	0.000	0.000	0.000	0.021	0.000	0.000	0.000
Steele City	NE	Greeley	714.674	714.750	0.076	NE077	Holdrege silt loam, 3 to 6 percent slopes	0.000	0.000	0.000	0.000	0.000	0.076	0.000	0.000	0.000
Steele City	NE	Greeley	714.750	714.817	0.067	NE077	Uly-Coly silt loams, 15 to 30 percent slopes	0.000	0.067	0.000	0.000	0.000	0.067	0.000	0.000	0.000
Steele City	NE	Greeley	714.817	714.820	0.003	NE077	Holdrege silty clay loam, 3 to 6 percent slopes, eroded	0.000	0.000	0.000	0.000	0.000	0.003	0.000	0.000	0.000
Steele City	NE	Greeley	714.820	714.882	0.062	NE077	Uly-Coly silt loams, 15 to 30 percent slopes	0.000	0.062	0.000	0.000	0.000	0.062	0.000	0.000	0.000
Steele City	NE	Greeley	714.882	714.904	0.022	NE077	Coly-Uly silt loams, 11 to 17 percent slopes, eroded	0.000	0.022	0.000	0.000	0.000	0.022	0.000	0.000	0.000
Steele City	NE	Greeley	714.904	714.977	0.074	NE077	Uly-Coly silt loams, 15 to 30 percent slopes	0.000	0.074	0.000	0.000	0.000	0.074	0.000	0.000	0.000
Steele City	NE	Greeley	714.977	715.070	0.092	NE077	Coly-Uly silt loams, 11 to 17 percent slopes, eroded	0.000	0.092	0.000	0.000	0.000	0.092	0.000	0.000	0.000
Steele City	NE	Greeley	715.070	715.168	0.099	NE077	Uly-Coly silt loams, 15 to 30 percent slopes	0.000	0.099	0.000	0.000	0.000	0.099	0.000	0.000	0.000
Steele City	NE	Greeley	715.168	715.222	0.054	NE077	Coly-Uly silt loams, 11 to 17 percent slopes, eroded	0.000	0.054	0.000	0.000	0.000	0.054	0.000	0.000	0.000
Steele City	NE	Greeley	715.222	715.274	0.052	NE077	Uly-Coly silt loams, 15 to 30 percent slopes	0.000	0.052	0.000	0.000	0.000	0.052	0.000	0.000	0.000
Steele City	NE	Greeley	715.274	715.314	0.040	NE077	Uly-Coly silt loams, 6 to 11 percent slopes, eroded	0.000	0.040	0.000	0.000	0.000	0.040	0.000	0.000	0.000
Steele City	NE	Greeley	715.314	715.348	0.035	NE077	Uly-Coly silt loams, 15 to 30 percent slopes	0.000	0.035	0.000	0.000	0.000	0.035	0.000	0.000	0.000
Steele City	NE	Greeley	715.348	715.378	0.029	NE077	Uly-Coly silt loams, 6 to 11 percent slopes, eroded	0.000	0.029	0.000	0.000	0.000	0.029	0.000	0.000	0.000

Appendix K – Soils by Milepost – Steele City Segment

Pipeline Segment	State	County	Beginning Milepost	Ending Milepost	Miles	Soil Series	Soil Series Name	Wind (miles)	Water (miles)	Low revegetation on Potential (miles)	Prime Farmland (miles)	Hydric Soils (miles)	Compaction on Prone (miles)	Stoney – Rocky (miles)	Shallow Bedrock (miles)	Droghty (miles)
Steele City	NE	Greeley	715.378	715.433	0.055	NE077	Uly-Coly silt loams, 15 to 30 percent slopes	0.000	0.055	0.000	0.000	0.000	0.055	0.000	0.000	0.000
Steele City	NE	Greeley	715.433	715.480	0.047	NE077	Uly-Coly silt loams, 6 to 11 percent slopes, eroded	0.000	0.047	0.000	0.000	0.000	0.047	0.000	0.000	0.000
Steele City	NE	Greeley	715.480	715.549	0.069	NE077	Uly-Coly silt loams, 15 to 30 percent slopes	0.000	0.069	0.000	0.000	0.000	0.069	0.000	0.000	0.000
Steele City	NE	Greeley	715.549	715.633	0.084	NE077	Coly-Uly silt loams, 11 to 17 percent slopes, eroded	0.000	0.084	0.000	0.000	0.000	0.084	0.000	0.000	0.000
Steele City	NE	Greeley	715.633	715.703	0.071	NE077	Uly-Coly silt loams, 15 to 30 percent slopes	0.000	0.071	0.000	0.000	0.000	0.071	0.000	0.000	0.000
Steele City	NE	Greeley	715.703	715.734	0.031	NE077	Coly-Uly silt loams, 11 to 17 percent slopes, eroded	0.000	0.031	0.000	0.000	0.000	0.031	0.000	0.000	0.000
Steele City	NE	Greeley	715.734	715.782	0.048	NE077	Uly-Coly silt loams, 15 to 30 percent slopes	0.000	0.048	0.000	0.000	0.000	0.048	0.000	0.000	0.000
Steele City	NE	Greeley	715.782	715.832	0.050	NE077	Uly silt loam, 11 to 17 percent slopes	0.000	0.050	0.000	0.000	0.000	0.050	0.000	0.000	0.000
Steele City	NE	Greeley	715.832	715.869	0.036	NE077	Uly silt loam, 6 to 11 percent slopes	0.000	0.036	0.000	0.000	0.000	0.036	0.000	0.000	0.000
Steele City	NE	Greeley	715.869	715.949	0.081	NE077	Uly-Coly silt loams, 15 to 30 percent slopes	0.000	0.081	0.000	0.000	0.000	0.081	0.000	0.000	0.000
Steele City	NE	Greeley	715.949	716.043	0.093	NE077	Uly silt loam, 6 to 11 percent slopes	0.000	0.093	0.000	0.000	0.000	0.093	0.000	0.000	0.000
Steele City	NE	Greeley	716.043	716.188	0.146	NE077	Uly-Coly silt loams, 15 to 30 percent slopes	0.000	0.146	0.000	0.000	0.000	0.146	0.000	0.000	0.000
Steele City	NE	Greeley	716.188	716.280	0.092	NE077	Coly-Uly silt loams, 11 to 17 percent slopes, eroded	0.000	0.092	0.000	0.000	0.000	0.092	0.000	0.000	0.000
Steele City	NE	Greeley	716.280	716.335	0.055	NE077	Uly-Coly silt loams, 6 to 11 percent slopes, eroded	0.000	0.055	0.000	0.000	0.000	0.055	0.000	0.000	0.000
Steele City	NE	Greeley	716.335	716.523	0.189	NE077	Coly-Uly silt loams, 11 to 17 percent slopes, eroded	0.000	0.189	0.000	0.000	0.000	0.189	0.000	0.000	0.000
Steele City	NE	Greeley	716.523	716.623	0.100	NE077	Uly-Coly silt loams, 6 to 11 percent slopes, eroded	0.000	0.100	0.000	0.000	0.000	0.100	0.000	0.000	0.000
Steele City	NE	Greeley	716.623	716.709	0.086	NE077	Hobbs silt loam, 0 to 2 percent slopes	0.000	0.000	0.000	0.000	0.001	0.086	0.000	0.000	0.000
Steele City	NE	Greeley	716.709	716.833	0.124	NE077	Uly silt loam, 6 to 11 percent slopes	0.000	0.124	0.000	0.000	0.000	0.124	0.000	0.000	0.000
Steele City	NE	Greeley	716.833	716.865	0.032	NE077	Coly-Uly silt loams, 11 to 17 percent slopes, eroded	0.000	0.032	0.000	0.000	0.000	0.032	0.000	0.000	0.000
Steele City	NE	Greeley	716.865	716.963	0.097	NE077	Uly silt loam, 6 to 11 percent slopes	0.000	0.097	0.000	0.000	0.000	0.097	0.000	0.000	0.000
Steele City	NE	Greeley	716.963	717.057	0.094	NE077	Coly-Uly silt loams, 11 to 17 percent slopes, eroded	0.000	0.094	0.000	0.000	0.000	0.094	0.000	0.000	0.000
Steele City	NE	Greeley	717.057	717.093	0.037	NE077	Uly-Coly silt loams, 6 to 11 percent slopes, eroded	0.000	0.037	0.000	0.000	0.000	0.037	0.000	0.000	0.000
Steele City	NE	Greeley	717.093	717.169	0.076	NE077	Coly-Uly silt loams, 11 to 17 percent slopes, eroded	0.000	0.076	0.000	0.000	0.000	0.076	0.000	0.000	0.000
Steele City	NE	Greeley	717.169	717.221	0.052	NE077	Uly-Coly silt loams, 6 to 11 percent slopes, eroded	0.000	0.052	0.000	0.000	0.000	0.052	0.000	0.000	0.000
Steele City	NE	Greeley	717.221	717.282	0.062	NE077	Coly-Uly silt loams, 11 to 17 percent slopes, eroded	0.000	0.062	0.000	0.000	0.000	0.062	0.000	0.000	0.000
Steele City	NE	Greeley	717.282	717.330	0.048	NE077	Uly-Coly silt loams, 6 to 11 percent slopes, eroded	0.000	0.048	0.000	0.000	0.000	0.048	0.000	0.000	0.000
Steele City	NE	Greeley	717.330	717.383	0.052	NE077	Coly-Uly silt loams, 11 to 17 percent slopes, eroded	0.000	0.052	0.000	0.000	0.000	0.052	0.000	0.000	0.000
Steele City	NE	Greeley	717.383	717.434	0.051	NE077	Uly silt loam, 6 to 11 percent slopes	0.000	0.051	0.000	0.000	0.000	0.051	0.000	0.000	0.000
Steele City	NE	Greeley	717.434	717.539	0.106	NE077	Coly-Uly silt loams, 11 to 17 percent slopes, eroded	0.000	0.106	0.000	0.000	0.000	0.106	0.000	0.000	0.000
Steele City	NE	Greeley	717.539	717.588	0.048	NE077	Uly-Coly silt loams, 6 to 11 percent slopes, eroded	0.000	0.048	0.000	0.000	0.000	0.048	0.000	0.000	0.000
Steele City	NE	Greeley	717.588	717.648	0.060	NE077	Holdrege silty clay loam, 3 to 6 percent slopes, eroded	0.000	0.000	0.000	0.000	0.000	0.060	0.000	0.000	0.000
Steele City	NE	Greeley	717.648	717.722	0.075	NE077	Uly-Coly silt loams, 6 to 11 percent slopes, eroded	0.000	0.075	0.000	0.000	0.000	0.075	0.000	0.000	0.000
Steele City	NE	Greeley	717.722	717.758	0.036	NE077	Holdrege silty clay loam, 3 to 6 percent slopes, eroded	0.000	0.000	0.000	0.000	0.000	0.036	0.000	0.000	0.000
Steele City	NE	Greeley	717.758	717.929	0.171	NE077	Uly-Coly silt loams, 6 to 11 percent slopes, eroded	0.000	0.171	0.000	0.000	0.000	0.171	0.000	0.000	0.000
Steele City	NE	Greeley	717.929	718.234	0.304	NE077	Coly-Uly silt loams, 11 to 17 percent slopes, eroded	0.000	0.304	0.000	0.000	0.000	0.304	0.000	0.000	0.000
Steele City	NE	Greeley	718.234	718.398	0.165	NE077	Uly-Coly silt loams, 6 to 11 percent slopes, eroded	0.000	0.165	0.000	0.000	0.000	0.165	0.000	0.000	0.000
Steele City	NE	Greeley	718.398	718.492	0.094	NE077	Uly-Coly silt loams, 15 to 30 percent slopes	0.000	0.094	0.000	0.000	0.000	0.094	0.000	0.000	0.000
Steele City	NE	Greeley	718.492	718.694	0.201	NE077	Uly-Coly silt loams, 6 to 11 percent slopes, eroded	0.000	0.201	0.000	0.000	0.000	0.201	0.000	0.000	0.000
Steele City	NE	Greeley	718.694	718.719	0.025	NE077	Coly-Uly silt loams, 11 to 17 percent slopes, eroded	0.000	0.025	0.000	0.000	0.000	0.025	0.000	0.000	0.000
Steele City	NE	Greeley	718.719	718.919	0.200	NE077	Uly-Coly silt loams, 6 to 11 percent slopes, eroded	0.000	0.200	0.000	0.000	0.000	0.200	0.000	0.000	0.000
Steele City	NE	Greeley	718.919	718.968	0.049	NE077	Coly-Uly silt loams, 11 to 17 percent slopes, eroded	0.000	0.049	0.000	0.000	0.000	0.049	0.000	0.000	0.000
Steele City	NE	Greeley	718.968	719.343	0.375	NE077	Uly-Coly silt loams, 6 to 11 percent slopes, eroded	0.000	0.375	0.000	0.000	0.000	0.375	0.000	0.000	0.000
Steele City	NE	Greeley	719.343	719.426	0.083	NE077	Coly-Uly silt loams, 11 to 17 percent slopes, eroded	0.000	0.083	0.000	0.000	0.000	0.083	0.000	0.000	0.000

Appendix K – Soils by Milepost – Steele City Segment

Pipeline Segment	State	County	Beginning Milepost	Ending Milepost	Miles	Soil Series	Soil Series Name	Wind (miles)	Water (miles)	Low revegetation on Potential (miles)	Prime Farmland (miles)	Hydric Soils (miles)	Compaction on Prone (miles)	Stoney – Rocky (miles)	Shallow Bedrock (miles)	Droghty (miles)
Steele City	NE	Greeley	719.426	719.461	0.035	NE077	Uly-Coly silt loams, 15 to 30 percent slopes	0.000	0.035	0.000	0.000	0.000	0.035	0.000	0.000	0.000
Steele City	NE	Greeley	719.461	719.478	0.017	NE077	Water	0.000	0.000	0.000	0.000	0.000	0.017	0.000	0.000	0.000
Steele City	NE	Greeley	719.478	719.498	0.020	NE077	Uly-Coly silt loams, 15 to 30 percent slopes	0.000	0.020	0.000	0.000	0.000	0.020	0.000	0.000	0.000
Steele City	NE	Greeley	719.498	719.606	0.108	NE077	Coly-Uly silt loams, 11 to 17 percent slopes, eroded	0.000	0.108	0.000	0.000	0.000	0.108	0.000	0.000	0.000
Steele City	NE	Greeley	719.606	719.754	0.149	NE077	Uly-Coly silt loams, 15 to 30 percent slopes	0.000	0.149	0.000	0.000	0.000	0.149	0.000	0.000	0.000
Steele City	NE	Greeley	719.754	719.857	0.103	NE077	Coly-Uly silt loams, 11 to 17 percent slopes, eroded	0.000	0.103	0.000	0.000	0.000	0.103	0.000	0.000	0.000
Steele City	NE	Greeley	719.857	719.896	0.039	NE077	Uly-Coly silt loams, 6 to 11 percent slopes, eroded	0.000	0.039	0.000	0.000	0.000	0.039	0.000	0.000	0.000
Steele City	NE	Greeley	719.896	719.920	0.024	NE077	Uly-Coly silt loams, 15 to 30 percent slopes	0.000	0.024	0.000	0.000	0.000	0.024	0.000	0.000	0.000
Steele City	NE	Greeley	719.920	719.964	0.044	NE077	Uly-Coly silt loams, 6 to 11 percent slopes, eroded	0.000	0.044	0.000	0.000	0.000	0.044	0.000	0.000	0.000
Steele City	NE	Greeley	719.964	720.194	0.231	NE077	Uly-Coly silt loams, 15 to 30 percent slopes	0.000	0.231	0.000	0.000	0.000	0.231	0.000	0.000	0.000
Steele City	NE	Boone	720.195	720.209	0.014	NE011	Crofton silt loam, 17 to 30 percent slopes, eroded	0.000	0.014	0.000	0.000	0.000	0.014	0.000	0.000	0.000
Steele City	NE	Boone	720.209	720.273	0.064	NE011	Nora silt loam, 7 to 12 percent slopes, eroded	0.000	0.064	0.000	0.000	0.000	0.064	0.000	0.000	0.000
Steele City	NE	Boone	720.273	720.326	0.053	NE011	Crofton-Nora silt loams, 17 to 30 percent slopes	0.000	0.053	0.000	0.000	0.000	0.053	0.000	0.000	0.000
Steele City	NE	Boone	720.326	720.398	0.072	NE011	Nora silt loam, 7 to 12 percent slopes	0.000	0.072	0.000	0.000	0.000	0.072	0.000	0.000	0.000
Steele City	NE	Boone	720.398	720.477	0.079	NE011	Crofton-Nora silt loams, 17 to 30 percent slopes	0.000	0.079	0.000	0.000	0.000	0.079	0.000	0.000	0.000
Steele City	NE	Boone	720.477	720.641	0.165	NE011	Nora silt loam, 7 to 12 percent slopes	0.000	0.165	0.000	0.000	0.000	0.165	0.000	0.000	0.000
Steele City	NE	Boone	720.641	720.641	0.000	NE011	Crofton-Nora silt loams, 17 to 30 percent slopes	0.000	0.000	0.000	0.000	0.000	0.000	0.000	0.000	0.000
Steele City	NE	Boone	720.641	720.695	0.054	NE011	Nora silt loam, 7 to 12 percent slopes	0.000	0.054	0.000	0.000	0.000	0.054	0.000	0.000	0.000
Steele City	NE	Boone	720.695	720.793	0.098	NE011	Crofton-Nora silt loams, 17 to 30 percent slopes	0.000	0.098	0.000	0.000	0.000	0.098	0.000	0.000	0.000
Steele City	NE	Boone	720.793	720.917	0.124	NE011	Nora silt loam, 7 to 12 percent slopes	0.000	0.124	0.000	0.000	0.000	0.124	0.000	0.000	0.000
Steele City	NE	Boone	720.917	721.185	0.268	NE011	Moody silty clay loam, 3 to 7 percent slopes, eroded	0.000	0.000	0.000	0.000	0.000	0.268	0.000	0.000	0.000
Steele City	NE	Boone	721.185	721.256	0.071	NE011	Nora silt loam, 7 to 12 percent slopes, eroded	0.000	0.071	0.000	0.000	0.000	0.071	0.000	0.000	0.000
Steele City	NE	Boone	721.256	721.293	0.037	NE011	Crofton-Nora silt loams, 12 to 17 percent slopes, eroded	0.000	0.037	0.000	0.000	0.000	0.037	0.000	0.000	0.000
Steele City	NE	Boone	721.293	721.344	0.051	NE011	Nora silt loam, 7 to 12 percent slopes, eroded	0.000	0.051	0.000	0.000	0.000	0.051	0.000	0.000	0.000
Steele City	NE	Boone	721.344	721.363	0.019	NE011	Crofton-Nora silt loams, 12 to 17 percent slopes, eroded	0.000	0.019	0.000	0.000	0.000	0.019	0.000	0.000	0.000
Steele City	NE	Boone	721.363	721.389	0.026	NE011	Nora silt loam, 7 to 12 percent slopes, eroded	0.000	0.026	0.000	0.000	0.000	0.026	0.000	0.000	0.000
Steele City	NE	Boone	721.389	721.415	0.025	NE011	Crofton-Nora silt loams, 12 to 17 percent slopes, eroded	0.000	0.025	0.000	0.000	0.000	0.025	0.000	0.000	0.000
Steele City	NE	Boone	721.415	721.432	0.017	NE011	Nora silt loam, 7 to 12 percent slopes, eroded	0.000	0.017	0.000	0.000	0.000	0.017	0.000	0.000	0.000
Steele City	NE	Boone	721.432	721.452	0.020	NE011	Crofton-Nora silt loams, 12 to 17 percent slopes, eroded	0.000	0.020	0.000	0.000	0.000	0.020	0.000	0.000	0.000
Steele City	NE	Boone	721.452	721.499	0.047	NE011	Crofton silt loam, 17 to 30 percent slopes, eroded	0.000	0.047	0.000	0.000	0.000	0.047	0.000	0.000	0.000
Steele City	NE	Boone	721.499	721.524	0.025	NE011	Nora silt loam, 7 to 12 percent slopes, eroded	0.000	0.025	0.000	0.000	0.000	0.025	0.000	0.000	0.000
Steele City	NE	Boone	721.524	721.608	0.084	NE011	Crofton silt loam, 17 to 30 percent slopes, eroded	0.000	0.084	0.000	0.000	0.000	0.084	0.000	0.000	0.000
Steele City	NE	Boone	721.608	721.663	0.055	NE011	Nora silt loam, 7 to 12 percent slopes, eroded	0.000	0.055	0.000	0.000	0.000	0.055	0.000	0.000	0.000
Steele City	NE	Boone	721.663	721.710	0.047	NE011	Crofton silt loam, 17 to 30 percent slopes, eroded	0.000	0.047	0.000	0.000	0.000	0.047	0.000	0.000	0.000
Steele City	NE	Boone	721.710	721.771	0.062	NE011	Nora silt loam, 7 to 12 percent slopes, eroded	0.000	0.062	0.000	0.000	0.000	0.062	0.000	0.000	0.000
Steele City	NE	Boone	721.771	721.801	0.030	NE011	Moody silty clay loam, 3 to 7 percent slopes, eroded	0.000	0.000	0.000	0.000	0.000	0.030	0.000	0.000	0.000
Steele City	NE	Boone	721.801	721.952	0.151	NE011	Nora silt loam, 7 to 12 percent slopes, eroded	0.000	0.151	0.000	0.000	0.000	0.151	0.000	0.000	0.000
Steele City	NE	Boone	721.952	721.960	0.008	NE011	Crofton-Nora silt loams, 17 to 30 percent slopes	0.000	0.008	0.000	0.000	0.000	0.008	0.000	0.000	0.000
Steele City	NE	Boone	721.960	721.992	0.031	NE011	Crofton silt loam, 17 to 30 percent slopes, eroded	0.000	0.031	0.000	0.000	0.000	0.031	0.000	0.000	0.000
Steele City	NE	Boone	721.992	722.057	0.065	NE011	Nora silt loam, 7 to 12 percent slopes, eroded	0.000	0.065	0.000	0.000	0.000	0.065	0.000	0.000	0.000
Steele City	NE	Boone	722.057	722.080	0.022	NE011	Crofton silt loam, 17 to 30 percent slopes, eroded	0.000	0.022	0.000	0.000	0.000	0.022	0.000	0.000	0.000

Appendix K – Soils by Milepost – Steele City Segment

Pipeline Segment	State	County	Beginning Milepost	Ending Milepost	Miles	Soil Series	Soil Series Name	Wind (miles)	Water (miles)	Low revegetation on Potential (miles)	Prime Farmland (miles)	Hydric Soils (miles)	Compaction on Prone (miles)	Stoney – Rocky (miles)	Shallow Bedrock (miles)	Droghty (miles)
Steele City	NE	Boone	722.080	722.113	0.033	NE011	Nora silt loam, 7 to 12 percent slopes, eroded	0.000	0.033	0.000	0.000	0.000	0.033	0.000	0.000	0.000
Steele City	NE	Boone	722.113	722.158	0.045	NE011	Crofton-Nora silt loams, 7 to 12 percent slopes, eroded	0.000	0.045	0.000	0.000	0.000	0.045	0.000	0.000	0.000
Steele City	NE	Boone	722.158	722.191	0.033	NE011	Nora silt loam, 7 to 12 percent slopes, eroded	0.000	0.033	0.000	0.000	0.000	0.033	0.000	0.000	0.000
Steele City	NE	Boone	722.191	722.263	0.073	NE011	Hord silt loam, 1 to 3 percent slopes	0.000	0.000	0.000	0.000	0.001	0.073	0.000	0.000	0.000
Steele City	NE	Boone	722.263	722.316	0.053	NE011	Nora silt loam, 7 to 12 percent slopes, eroded	0.000	0.053	0.000	0.000	0.000	0.053	0.000	0.000	0.000
Steele City	NE	Boone	722.316	722.373	0.057	NE011	Crofton-Nora silt loams, 17 to 30 percent slopes	0.000	0.057	0.000	0.000	0.000	0.057	0.000	0.000	0.000
Steele City	NE	Boone	722.373	722.398	0.025	NE011	Nora silt loam, 7 to 12 percent slopes, eroded	0.000	0.025	0.000	0.000	0.000	0.025	0.000	0.000	0.000
Steele City	NE	Boone	722.398	722.456	0.058	NE011	Hord silt loam, 1 to 3 percent slopes	0.000	0.000	0.000	0.000	0.001	0.058	0.000	0.000	0.000
Steele City	NE	Boone	722.456	722.636	0.180	NE011	Hord silt loam, 0 to 1 percent slopes	0.000	0.000	0.000	0.000	0.002	0.180	0.000	0.000	0.000
Steele City	NE	Boone	722.636	722.677	0.041	NE011	Crofton-Nora silt loams, 17 to 30 percent slopes	0.000	0.041	0.000	0.000	0.000	0.041	0.000	0.000	0.000
Steele City	NE	Boone	722.677	722.727	0.050	NE011	Hord silt loam, 0 to 1 percent slopes	0.000	0.000	0.000	0.000	0.000	0.050	0.000	0.000	0.000
Steele City	NE	Boone	722.727	722.766	0.039	NE011	Nora silt loam, 7 to 12 percent slopes	0.000	0.039	0.000	0.000	0.000	0.039	0.000	0.000	0.000
Steele City	NE	Boone	722.766	722.822	0.056	NE011	Crofton-Nora silt loams, 17 to 30 percent slopes	0.000	0.056	0.000	0.000	0.000	0.056	0.000	0.000	0.000
Steele City	NE	Boone	722.822	722.852	0.031	NE011	Nora silt loam, 7 to 12 percent slopes	0.000	0.031	0.000	0.000	0.000	0.031	0.000	0.000	0.000
Steele City	NE	Boone	722.852	722.954	0.102	NE011	Hord silt loam, 0 to 1 percent slopes	0.000	0.000	0.000	0.000	0.001	0.102	0.000	0.000	0.000
Steele City	NE	Boone	722.954	722.987	0.033	NE011	Nora silt loam, 7 to 12 percent slopes, eroded	0.000	0.033	0.000	0.000	0.000	0.033	0.000	0.000	0.000
Steele City	NE	Boone	722.987	723.295	0.308	NE011	Crofton-Nora silt loams, 17 to 30 percent slopes	0.000	0.308	0.000	0.000	0.000	0.308	0.000	0.000	0.000
Steele City	NE	Boone	723.295	723.313	0.018	NE011	Crofton-Nora silt loams, 7 to 12 percent slopes, eroded	0.000	0.018	0.000	0.000	0.000	0.018	0.000	0.000	0.000
Steele City	NE	Boone	723.313	723.379	0.066	NE011	Hord silt loam, 0 to 1 percent slopes	0.000	0.000	0.000	0.000	0.001	0.066	0.000	0.000	0.000
Steele City	NE	Boone	723.379	723.426	0.047	NE011	Crofton-Nora silt loams, 7 to 12 percent slopes, eroded	0.000	0.047	0.000	0.000	0.000	0.047	0.000	0.000	0.000
Steele City	NE	Boone	723.426	723.431	0.005	NE011	Hord silt loam, 0 to 1 percent slopes	0.000	0.000	0.000	0.000	0.000	0.005	0.000	0.000	0.000
Steele City	NE	Boone	723.431	723.466	0.035	NE011	Crofton-Nora silt loams, 7 to 12 percent slopes, eroded	0.000	0.035	0.000	0.000	0.000	0.035	0.000	0.000	0.000
Steele City	NE	Boone	723.466	723.512	0.046	NE011	Crofton silt loam, 17 to 30 percent slopes, eroded	0.000	0.046	0.000	0.000	0.000	0.046	0.000	0.000	0.000
Steele City	NE	Boone	723.512	723.517	0.005	NE011	Crofton-Nora silt loams, 7 to 12 percent slopes, eroded	0.000	0.005	0.000	0.000	0.000	0.005	0.000	0.000	0.000
Steele City	NE	Boone	723.517	723.583	0.067	NE011	Crofton silt loam, 17 to 30 percent slopes, eroded	0.000	0.067	0.000	0.000	0.000	0.067	0.000	0.000	0.000
Steele City	NE	Nance	723.583	723.586	0.002	NE125	Nora silt loam, 7 to 12 percent slopes, severely eroded	0.000	0.002	0.000	0.000	0.000	0.002	0.000	0.000	0.000
Steele City	NE	Nance	723.586	723.763	0.178	NE125	Crofton silt loam, 17 to 30 percent slopes	0.000	0.178	0.000	0.000	0.000	0.178	0.000	0.000	0.000
Steele City	NE	Nance	723.763	723.787	0.024	NE125	Belfore silt loam, 0 to 1 percent slopes	0.000	0.000	0.000	0.000	0.000	0.024	0.000	0.000	0.000
Steele City	NE	Nance	723.787	723.794	0.007	NE125	Crofton silt loam, 17 to 30 percent slopes	0.000	0.007	0.000	0.000	0.000	0.007	0.000	0.000	0.000
Steele City	NE	Nance	723.794	723.806	0.012	NE125	Nora silt loam, 7 to 12 percent slopes, eroded	0.000	0.012	0.000	0.000	0.000	0.012	0.000	0.000	0.000
Steele City	NE	Nance	723.806	723.900	0.094	NE125	Belfore silt loam, 0 to 1 percent slopes	0.000	0.000	0.000	0.000	0.000	0.094	0.000	0.000	0.000
Steele City	NE	Nance	723.900	723.930	0.030	NE125	Crofton silt loam, 17 to 30 percent slopes	0.000	0.030	0.000	0.000	0.000	0.030	0.000	0.000	0.000
Steele City	NE	Nance	723.930	724.116	0.186	NE125	Belfore silt loam, 0 to 1 percent slopes	0.000	0.000	0.000	0.000	0.000	0.186	0.000	0.000	0.000
Steele City	NE	Nance	724.116	724.131	0.015	NE125	Nora silt loam, 7 to 12 percent slopes, eroded	0.000	0.015	0.000	0.000	0.000	0.015	0.000	0.000	0.000
Steele City	NE	Nance	724.131	724.150	0.020	NE125	Belfore silt loam, 0 to 1 percent slopes	0.000	0.000	0.000	0.000	0.000	0.020	0.000	0.000	0.000
Steele City	NE	Nance	724.150	724.165	0.014	NE125	Nora silt loam, 7 to 12 percent slopes, eroded	0.000	0.014	0.000	0.000	0.000	0.014	0.000	0.000	0.000
Steele City	NE	Nance	724.165	724.189	0.024	NE125	Crofton silt loam, 17 to 30 percent slopes	0.000	0.024	0.000	0.000	0.000	0.024	0.000	0.000	0.000
Steele City	NE	Nance	724.189	724.236	0.047	NE125	Nora silt loam, 7 to 12 percent slopes, eroded	0.000	0.047	0.000	0.000	0.000	0.047	0.000	0.000	0.000
Steele City	NE	Nance	724.236	724.254	0.018	NE125	Crofton silt loam, 17 to 30 percent slopes, severely	0.000	0.018	0.000	0.000	0.000	0.018	0.000	0.000	0.000

Appendix K – Soils by Milepost – Steele City Segment

Pipeline Segment	State	County	Beginning Milepost	Ending Milepost	Miles	Soil Series	Soil Series Name	Wind (miles)	Water (miles)	Low revegetation on Potential (miles)	Prime Farmland (miles)	Hydric Soils (miles)	Compaction on Prone (miles)	Stoney – Rocky (miles)	Shallow Bedrock (miles)	Droghty (miles)
							eroded									
Steele City	NE	Nance	724.254	724.268	0.013	NE125	Nora silt loam, 7 to 12 percent slopes, eroded	0.000	0.013	0.000	0.000	0.000	0.013	0.000	0.000	0.000
Steele City	NE	Nance	724.268	724.679	0.412	NE125	Belfore silt loam, 1 to 3 percent slopes	0.000	0.000	0.000	0.000	0.000	0.412	0.000	0.000	0.000
Steele City	NE	Nance	724.679	724.698	0.019	NE125	Nora silt loam, 7 to 12 percent slopes, eroded	0.000	0.019	0.000	0.000	0.000	0.019	0.000	0.000	0.000
Steele City	NE	Nance	724.698	724.732	0.033	NE125	Crofton silt loam, 17 to 30 percent slopes, severely eroded	0.000	0.033	0.000	0.000	0.000	0.033	0.000	0.000	0.000
Steele City	NE	Nance	724.732	724.865	0.134	NE125	Nora silt loam, 7 to 12 percent slopes, eroded	0.000	0.134	0.000	0.000	0.000	0.134	0.000	0.000	0.000
Steele City	NE	Nance	724.865	724.898	0.033	NE125	Crofton silt loam, 17 to 30 percent slopes, severely eroded	0.000	0.033	0.000	0.000	0.000	0.033	0.000	0.000	0.000
Steele City	NE	Nance	724.898	724.953	0.054	NE125	Nora silt loam, 7 to 12 percent slopes, severely eroded	0.000	0.054	0.000	0.000	0.000	0.054	0.000	0.000	0.000
Steele City	NE	Nance	724.953	725.115	0.162	NE125	Moody-Nora silt loams, 3 to 7 percent slopes, eroded	0.000	0.000	0.000	0.000	0.000	0.162	0.000	0.000	0.000
Steele City	NE	Nance	725.115	725.267	0.152	NE125	Nora silt loam, 7 to 12 percent slopes, severely eroded	0.000	0.152	0.000	0.000	0.000	0.152	0.000	0.000	0.000
Steele City	NE	Nance	725.267	725.322	0.056	NE125	Crofton silt loam, 17 to 30 percent slopes, severely eroded	0.000	0.056	0.000	0.000	0.000	0.056	0.000	0.000	0.000
Steele City	NE	Nance	725.322	725.454	0.132	NE125	Nora silt loam, 7 to 12 percent slopes, severely eroded	0.000	0.132	0.000	0.000	0.000	0.132	0.000	0.000	0.000
Steele City	NE	Nance	725.454	725.474	0.020	NE125	Crofton silt loam, 17 to 30 percent slopes, severely eroded	0.000	0.020	0.000	0.000	0.000	0.020	0.000	0.000	0.000
Steele City	NE	Nance	725.474	725.563	0.089	NE125	Crofton silt loam, 17 to 30 percent slopes	0.000	0.089	0.000	0.000	0.000	0.089	0.000	0.000	0.000
Steele City	NE	Nance	725.563	725.733	0.170	NE125	Nora silt loam, 7 to 12 percent slopes	0.000	0.170	0.000	0.000	0.000	0.170	0.000	0.000	0.000
Steele City	NE	Nance	725.733	725.881	0.148	NE125	Crofton silt loam, 17 to 30 percent slopes	0.000	0.148	0.000	0.000	0.000	0.148	0.000	0.000	0.000
Steele City	NE	Nance	725.881	725.997	0.116	NE125	Nora silt loam, 7 to 12 percent slopes, severely eroded	0.000	0.116	0.000	0.000	0.000	0.116	0.000	0.000	0.000
Steele City	NE	Nance	725.997	726.161	0.164	NE125	Nora silt loam, 7 to 12 percent slopes, eroded	0.000	0.164	0.000	0.000	0.000	0.164	0.000	0.000	0.000
Steele City	NE	Nance	726.161	726.176	0.015	NE125	Moody-Nora silt loams, 3 to 7 percent slopes, eroded	0.000	0.000	0.000	0.000	0.000	0.015	0.000	0.000	0.000
Steele City	NE	Nance	726.176	726.236	0.061	NE125	Nora silt loam, 7 to 12 percent slopes, severely eroded	0.000	0.061	0.000	0.000	0.000	0.061	0.000	0.000	0.000
Steele City	NE	Nance	726.236	726.290	0.054	NE125	Hall silt loam, 0 to 1 percent slopes	0.000	0.000	0.000	0.000	0.000	0.054	0.000	0.000	0.000
Steele City	NE	Nance	726.290	726.328	0.038	NE125	Nora silt loam, 7 to 12 percent slopes, severely eroded	0.000	0.038	0.000	0.000	0.000	0.038	0.000	0.000	0.000
Steele City	NE	Nance	726.328	726.369	0.041	NE125	Hall silt loam, 0 to 1 percent slopes	0.000	0.000	0.000	0.000	0.000	0.041	0.000	0.000	0.000
Steele City	NE	Nance	726.369	726.489	0.120	NE125	Silty alluvial land	0.000	0.000	0.000	0.000	0.001	0.120	0.000	0.000	0.000
Steele City	NE	Nance	726.489	726.517	0.028	NE125	Hall silt loam, 1 to 3 percent slopes	0.000	0.000	0.000	0.000	0.000	0.028	0.000	0.000	0.000
Steele City	NE	Nance	726.517	726.555	0.038	NE125	Silty alluvial land	0.000	0.000	0.000	0.000	0.000	0.038	0.000	0.000	0.000
Steele City	NE	Nance	726.555	726.577	0.022	NE125	Hall silt loam, 1 to 3 percent slopes	0.000	0.000	0.000	0.000	0.000	0.022	0.000	0.000	0.000
Steele City	NE	Nance	726.577	726.652	0.074	NE125	Nora silt loam, 7 to 12 percent slopes, severely eroded	0.000	0.074	0.000	0.000	0.000	0.074	0.000	0.000	0.000
Steele City	NE	Nance	726.652	726.696	0.045	NE125	Hall silt loam, 1 to 3 percent slopes	0.000	0.000	0.000	0.000	0.000	0.045	0.000	0.000	0.000
Steele City	NE	Nance	726.696	726.747	0.051	NE125	Silty alluvial land	0.000	0.000	0.000	0.000	0.001	0.051	0.000	0.000	0.000
Steele City	NE	Nance	726.747	726.892	0.145	NE125	Hall silt loam, 0 to 1 percent slopes	0.000	0.000	0.000	0.000	0.000	0.145	0.000	0.000	0.000
Steele City	NE	Nance	726.892	726.928	0.035	NE125	Nora silt loam, 7 to 12 percent slopes, eroded	0.000	0.035	0.000	0.000	0.000	0.035	0.000	0.000	0.000
Steele City	NE	Nance	726.928	727.078	0.150	NE125	Nora silt loam, 7 to 12 percent slopes, severely eroded	0.000	0.150	0.000	0.000	0.000	0.150	0.000	0.000	0.000

Appendix K – Soils by Milepost – Steele City Segment

Pipeline Segment	State	County	Beginning Milepost	Ending Milepost	Miles	Soil Series	Soil Series Name	Wind (miles)	Water (miles)	Low revegetation on Potential (miles)	Prime Farmland (miles)	Hydric Soils (miles)	Compaction on Prone (miles)	Stoney – Rocky (miles)	Shallow Bedrock (miles)	Droghty (miles)
Steele City	NE	Nance	727.078	727.128	0.049	NE125	Nora silt loam, 7 to 12 percent slopes, eroded	0.000	0.049	0.000	0.000	0.000	0.049	0.000	0.000	0.000
Steele City	NE	Nance	727.128	727.207	0.079	NE125	Crofton silt loam, 17 to 30 percent slopes, severely eroded	0.000	0.079	0.000	0.000	0.000	0.079	0.000	0.000	0.000
Steele City	NE	Nance	727.207	727.233	0.026	NE125	Nora silt loam, 7 to 12 percent slopes, eroded	0.000	0.026	0.000	0.000	0.000	0.026	0.000	0.000	0.000
Steele City	NE	Nance	727.233	727.366	0.133	NE125	Crofton silt loam, 17 to 30 percent slopes, severely eroded	0.000	0.133	0.000	0.000	0.000	0.133	0.000	0.000	0.000
Steele City	NE	Nance	727.366	727.389	0.023	NE125	Nora silt loam, 7 to 12 percent slopes	0.000	0.023	0.000	0.000	0.000	0.023	0.000	0.000	0.000
Steele City	NE	Nance	727.389	727.399	0.011	NE125	Nora silt loam, 7 to 12 percent slopes, severely eroded	0.000	0.011	0.000	0.000	0.000	0.011	0.000	0.000	0.000
Steele City	NE	Nance	727.399	727.424	0.025	NE125	Nora silt loam, 7 to 12 percent slopes	0.000	0.025	0.000	0.000	0.000	0.025	0.000	0.000	0.000
Steele City	NE	Nance	727.424	727.479	0.055	NE125	Crofton silt loam, 17 to 30 percent slopes	0.000	0.055	0.000	0.000	0.000	0.055	0.000	0.000	0.000
Steele City	NE	Nance	727.479	727.545	0.066	NE125	Nora silt loam, 7 to 12 percent slopes	0.000	0.066	0.000	0.000	0.000	0.066	0.000	0.000	0.000
Steele City	NE	Nance	727.545	727.686	0.142	NE125	Crofton silt loam, 17 to 30 percent slopes	0.000	0.142	0.000	0.000	0.000	0.142	0.000	0.000	0.000
Steele City	NE	Nance	727.686	727.817	0.130	NE125	Nora silt loam, 7 to 12 percent slopes, severely eroded	0.000	0.130	0.000	0.000	0.000	0.130	0.000	0.000	0.000
Steele City	NE	Nance	727.817	727.883	0.066	NE125	Crofton silt loam, 17 to 30 percent slopes, severely eroded	0.000	0.066	0.000	0.000	0.000	0.066	0.000	0.000	0.000
Steele City	NE	Nance	727.883	728.043	0.161	NE125	Nora silt loam, 7 to 12 percent slopes, severely eroded	0.000	0.161	0.000	0.000	0.000	0.161	0.000	0.000	0.000
Steele City	NE	Nance	728.043	728.083	0.040	NE125	Nora silt loam, 7 to 12 percent slopes, eroded	0.000	0.040	0.000	0.000	0.000	0.040	0.000	0.000	0.000
Steele City	NE	Nance	728.083	728.137	0.054	NE125	Crofton silt loam, 17 to 30 percent slopes	0.000	0.054	0.000	0.000	0.000	0.054	0.000	0.000	0.000
Steele City	NE	Nance	728.137	728.212	0.075	NE125	Nora silt loam, 7 to 12 percent slopes, eroded	0.000	0.075	0.000	0.000	0.000	0.075	0.000	0.000	0.000
Steele City	NE	Nance	728.212	728.220	0.008	NE125	Crofton silt loam, 17 to 30 percent slopes	0.000	0.008	0.000	0.000	0.000	0.008	0.000	0.000	0.000
Steele City	NE	Nance	728.220	728.279	0.058	NE125	Nora silt loam, 7 to 12 percent slopes, eroded	0.000	0.058	0.000	0.000	0.000	0.058	0.000	0.000	0.000
Steele City	NE	Nance	728.279	728.643	0.364	NE125	Crofton silt loam, 17 to 30 percent slopes, severely eroded	0.000	0.364	0.000	0.000	0.000	0.364	0.000	0.000	0.000
Steele City	NE	Nance	728.643	728.674	0.031	NE125	Nora silt loam, 7 to 12 percent slopes, eroded	0.000	0.031	0.000	0.000	0.000	0.031	0.000	0.000	0.000
Steele City	NE	Nance	728.674	728.691	0.017	NE125	Crofton silt loam, 17 to 30 percent slopes, severely eroded	0.000	0.017	0.000	0.000	0.000	0.017	0.000	0.000	0.000
Steele City	NE	Nance	728.691	728.884	0.193	NE125	Nora silt loam, 7 to 12 percent slopes, eroded	0.000	0.193	0.000	0.000	0.000	0.193	0.000	0.000	0.000
Steele City	NE	Nance	728.884	728.991	0.107	NE125	Crofton silt loam, 12 to 17 percent slopes, severely eroded	0.000	0.107	0.000	0.000	0.000	0.107	0.000	0.000	0.000
Steele City	NE	Nance	728.991	729.146	0.156	NE125	Crofton silt loam, 17 to 30 percent slopes	0.000	0.156	0.000	0.000	0.000	0.156	0.000	0.000	0.000
Steele City	NE	Nance	729.146	729.194	0.048	NE125	Nora silt loam, 7 to 12 percent slopes	0.000	0.048	0.000	0.000	0.000	0.048	0.000	0.000	0.000
Steele City	NE	Nance	729.194	729.436	0.242	NE125	Crofton silt loam, 17 to 30 percent slopes	0.000	0.242	0.000	0.000	0.000	0.242	0.000	0.000	0.000
Steele City	NE	Nance	729.436	729.508	0.072	NE125	Nora silt loam, 7 to 12 percent slopes, severely eroded	0.000	0.072	0.000	0.000	0.000	0.072	0.000	0.000	0.000
Steele City	NE	Nance	729.508	729.520	0.012	NE125	Crofton silt loam, 17 to 30 percent slopes	0.000	0.012	0.000	0.000	0.000	0.012	0.000	0.000	0.000
Steele City	NE	Nance	729.520	729.660	0.140	NE125	Nora silt loam, 7 to 12 percent slopes, severely eroded	0.000	0.140	0.000	0.000	0.000	0.140	0.000	0.000	0.000
Steele City	NE	Nance	729.660	729.676	0.016	NE125	Crofton silt loam, 17 to 30 percent slopes	0.000	0.016	0.000	0.000	0.000	0.016	0.000	0.000	0.000
Steele City	NE	Nance	729.676	729.749	0.074	NE125	Crofton silt loam, 17 to 30 percent slopes, severely eroded	0.000	0.074	0.000	0.000	0.000	0.074	0.000	0.000	0.000
Steele City	NE	Nance	729.749	729.767	0.017	NE125	Nora silt loam, 7 to 12 percent slopes, severely eroded	0.000	0.017	0.000	0.000	0.000	0.017	0.000	0.000	0.000

Appendix K – Soils by Milepost – Steele City Segment

Pipeline Segment	State	County	Beginning Milepost	Ending Milepost	Miles	Soil Series	Soil Series Name	Wind (miles)	Water (miles)	Low revegetation on Potential (miles)	Prime Farmland (miles)	Hydric Soils (miles)	Compaction on Prone (miles)	Stoney – Rocky (miles)	Shallow Bedrock (miles)	Droghty (miles)
Steele City	NE	Nance	729.767	729.893	0.126	NE125	Crofton silt loam, 17 to 30 percent slopes, severely eroded	0.000	0.126	0.000	0.000	0.000	0.126	0.000	0.000	0.000
Steele City	NE	Nance	729.893	729.938	0.045	NE125	Nora silt loam, 7 to 12 percent slopes, severely eroded	0.000	0.045	0.000	0.000	0.000	0.045	0.000	0.000	0.000
Steele City	NE	Nance	729.938	730.092	0.154	NE125	Crofton silt loam, 17 to 30 percent slopes, severely eroded	0.000	0.154	0.000	0.000	0.000	0.154	0.000	0.000	0.000
Steele City	NE	Nance	730.092	730.126	0.034	NE125	Nora silt loam, 7 to 12 percent slopes, severely eroded	0.000	0.034	0.000	0.000	0.000	0.034	0.000	0.000	0.000
Steele City	NE	Nance	730.126	730.150	0.024	NE125	Moody-Nora silt loams, 3 to 7 percent slopes, eroded	0.000	0.000	0.000	0.000	0.000	0.024	0.000	0.000	0.000
Steele City	NE	Nance	730.150	730.170	0.020	NE125	Nora silt loam, 7 to 12 percent slopes, severely eroded	0.000	0.020	0.000	0.000	0.000	0.020	0.000	0.000	0.000
Steele City	NE	Nance	730.170	730.190	0.020	NE125	Crofton silt loam, 17 to 30 percent slopes, severely eroded	0.000	0.020	0.000	0.000	0.000	0.020	0.000	0.000	0.000
Steele City	NE	Nance	730.190	730.512	0.322	NE125	Nora silt loam, 7 to 12 percent slopes, severely eroded	0.000	0.322	0.000	0.000	0.000	0.322	0.000	0.000	0.000
Steele City	NE	Nance	730.512	730.540	0.028	NE125	Crofton silt loam, 17 to 30 percent slopes, severely eroded	0.000	0.028	0.000	0.000	0.000	0.028	0.000	0.000	0.000
Steele City	NE	Nance	730.540	730.567	0.027	NE125	Nora silt loam, 7 to 12 percent slopes, severely eroded	0.000	0.027	0.000	0.000	0.000	0.027	0.000	0.000	0.000
Steele City	NE	Nance	730.567	730.788	0.221	NE125	Belfore silt loam, 0 to 1 percent slopes	0.000	0.000	0.000	0.000	0.000	0.221	0.000	0.000	0.000
Steele City	NE	Nance	730.788	730.965	0.177	NE125	Crofton silt loam, 17 to 30 percent slopes	0.000	0.177	0.000	0.000	0.000	0.177	0.000	0.000	0.000
Steele City	NE	Nance	730.965	731.088	0.123	NE125	Belfore silt loam, 0 to 1 percent slopes	0.000	0.000	0.000	0.000	0.000	0.123	0.000	0.000	0.000
Steele City	NE	Nance	731.088	731.685	0.597	NE125	Crofton silt loam, 17 to 30 percent slopes, severely eroded	0.000	0.597	0.000	0.000	0.000	0.597	0.000	0.000	0.000
Steele City	NE	Nance	731.685	731.763	0.079	NE125	Nora silt loam, 7 to 12 percent slopes, severely eroded	0.000	0.079	0.000	0.000	0.000	0.079	0.000	0.000	0.000
Steele City	NE	Nance	731.763	731.886	0.122	NE125	Crofton silt loam, 17 to 30 percent slopes, severely eroded	0.000	0.122	0.000	0.000	0.000	0.122	0.000	0.000	0.000
Steele City	NE	Nance	731.886	732.051	0.165	NE125	Nora silt loam, 7 to 12 percent slopes, severely eroded	0.000	0.165	0.000	0.000	0.000	0.165	0.000	0.000	0.000
Steele City	NE	Nance	732.051	732.105	0.054	NE125	Crofton silt loam, 12 to 17 percent slopes, severely eroded	0.000	0.054	0.000	0.000	0.000	0.054	0.000	0.000	0.000
Steele City	NE	Nance	732.105	732.180	0.075	NE125	Nora silt loam, 7 to 12 percent slopes, severely eroded	0.000	0.075	0.000	0.000	0.000	0.075	0.000	0.000	0.000
Steele City	NE	Nance	732.180	732.202	0.023	NE125	Crofton silt loam, 12 to 17 percent slopes, severely eroded	0.000	0.023	0.000	0.000	0.000	0.023	0.000	0.000	0.000
Steele City	NE	Nance	732.202	732.560	0.357	NE125	Nora silt loam, 7 to 12 percent slopes, severely eroded	0.000	0.357	0.000	0.000	0.000	0.357	0.000	0.000	0.000
Steele City	NE	Nance	732.560	732.627	0.067	NE125	Nora-Crofton silt loams, 12 to 17 percent slopes, severely eroded	0.000	0.067	0.000	0.000	0.000	0.067	0.000	0.000	0.000
Steele City	NE	Nance	732.627	732.650	0.023	NE125	Nora silt loam, 7 to 12 percent slopes, severely eroded	0.000	0.023	0.000	0.000	0.000	0.023	0.000	0.000	0.000
Steele City	NE	Nance	732.650	732.674	0.024	NE125	Nora-Crofton silt loams, 12 to 17 percent slopes, severely eroded	0.000	0.024	0.000	0.000	0.000	0.024	0.000	0.000	0.000
Steele City	NE	Nance	732.674	732.683	0.009	NE125	Nora silt loam, 7 to 12 percent slopes, severely eroded	0.000	0.009	0.000	0.000	0.000	0.009	0.000	0.000	0.000

Appendix K – Soils by Milepost – Steele City Segment

Pipeline Segment	State	County	Beginning Milepost	Ending Milepost	Miles	Soil Series	Soil Series Name	Wind (miles)	Water (miles)	Low revegetation on Potential (miles)	Prime Farmland (miles)	Hydric Soils (miles)	Compaction on Prone (miles)	Stoney – Rocky (miles)	Shallow Bedrock (miles)	Droghty (miles)
Steele City	NE	Nance	732.683	732.806	0.123	NE125	Belfore silt loam, 1 to 3 percent slopes	0.000	0.000	0.000	0.000	0.000	0.123	0.000	0.000	0.000
Steele City	NE	Nance	732.806	732.834	0.028	NE125	Nora silt loam, 7 to 12 percent slopes, severely eroded	0.000	0.028	0.000	0.000	0.000	0.028	0.000	0.000	0.000
Steele City	NE	Nance	732.834	733.209	0.375	NE125	Crofton silt loam, 17 to 30 percent slopes, severely eroded	0.000	0.375	0.000	0.000	0.000	0.375	0.000	0.000	0.000
Steele City	NE	Nance	733.209	733.473	0.264	NE125	Crofton silt loam, 17 to 30 percent slopes	0.000	0.264	0.000	0.000	0.000	0.264	0.000	0.000	0.000
Steele City	NE	Nance	733.473	733.621	0.148	NE125	Crofton silt loam, 17 to 30 percent slopes, severely eroded	0.000	0.148	0.000	0.000	0.000	0.148	0.000	0.000	0.000
Steele City	NE	Nance	733.621	734.044	0.422	NE125	Belfore silt loam, 0 to 1 percent slopes	0.000	0.000	0.000	0.000	0.000	0.422	0.000	0.000	0.000
Steele City	NE	Nance	734.044	734.193	0.149	NE125	Crofton silt loam, 17 to 30 percent slopes	0.000	0.149	0.000	0.000	0.000	0.149	0.000	0.000	0.000
Steele City	NE	Nance	734.193	734.297	0.105	NE125	Belfore silt loam, 0 to 1 percent slopes	0.000	0.000	0.000	0.000	0.000	0.105	0.000	0.000	0.000
Steele City	NE	Nance	734.297	734.537	0.240	NE125	Crofton silt loam, 17 to 30 percent slopes	0.000	0.240	0.000	0.000	0.000	0.240	0.000	0.000	0.000
Steele City	NE	Nance	734.537	734.706	0.169	NE125	Belfore silt loam, 0 to 1 percent slopes	0.000	0.000	0.000	0.000	0.000	0.169	0.000	0.000	0.000
Steele City	NE	Nance	734.706	734.742	0.036	NE125	Crofton silt loam, 17 to 30 percent slopes	0.000	0.036	0.000	0.000	0.000	0.036	0.000	0.000	0.000
Steele City	NE	Nance	734.742	735.276	0.534	NE125	Belfore silt loam, 0 to 1 percent slopes	0.000	0.000	0.000	0.000	0.000	0.534	0.000	0.000	0.000
Steele City	NE	Nance	735.276	735.311	0.035	NE125	Crofton silt loam, 17 to 30 percent slopes	0.000	0.035	0.000	0.000	0.000	0.035	0.000	0.000	0.000
Steele City	NE	Nance	735.311	735.340	0.030	NE125	Belfore silt loam, 0 to 1 percent slopes	0.000	0.000	0.000	0.000	0.000	0.030	0.000	0.000	0.000
Steele City	NE	Nance	735.340	735.370	0.029	NE125	Crofton silt loam, 17 to 30 percent slopes	0.000	0.029	0.000	0.000	0.000	0.029	0.000	0.000	0.000
Steele City	NE	Nance	735.370	735.417	0.048	NE125	Belfore silt loam, 0 to 1 percent slopes	0.000	0.000	0.000	0.000	0.000	0.048	0.000	0.000	0.000
Steele City	NE	Nance	735.417	735.427	0.010	NE125	Crofton silt loam, 17 to 30 percent slopes	0.000	0.010	0.000	0.000	0.000	0.010	0.000	0.000	0.000
Steele City	NE	Nance	735.427	735.562	0.135	NE125	Belfore silt loam, 0 to 1 percent slopes	0.000	0.000	0.000	0.000	0.000	0.135	0.000	0.000	0.000
Steele City	NE	Nance	735.562	735.689	0.127	NE125	Crofton silt loam, 17 to 30 percent slopes	0.000	0.127	0.000	0.000	0.000	0.127	0.000	0.000	0.000
Steele City	NE	Nance	735.689	735.873	0.183	NE125	Crofton silt loam, 17 to 30 percent slopes, severely eroded	0.000	0.183	0.000	0.000	0.000	0.183	0.000	0.000	0.000
Steele City	NE	Nance	735.873	736.116	0.243	NE125	Crofton silt loam, 17 to 30 percent slopes	0.000	0.243	0.000	0.000	0.000	0.243	0.000	0.000	0.000
Steele City	NE	Nance	736.116	736.149	0.034	NE125	Nora silt loam, 7 to 12 percent slopes	0.000	0.034	0.000	0.000	0.000	0.034	0.000	0.000	0.000
Steele City	NE	Nance	736.149	736.226	0.077	NE125	Crofton silt loam, 17 to 30 percent slopes	0.000	0.077	0.000	0.000	0.000	0.077	0.000	0.000	0.000
Steele City	NE	Nance	736.226	736.400	0.174	NE125	Nora silt loam, 7 to 12 percent slopes	0.000	0.174	0.000	0.000	0.000	0.174	0.000	0.000	0.000
Steele City	NE	Nance	736.400	736.492	0.092	NE125	Nora silt loam, 7 to 12 percent slopes, eroded	0.000	0.092	0.000	0.000	0.000	0.092	0.000	0.000	0.000
Steele City	NE	Nance	736.492	736.606	0.114	NE125	Belfore silt loam, 1 to 3 percent slopes	0.000	0.000	0.000	0.000	0.000	0.114	0.000	0.000	0.000
Steele City	NE	Nance	736.606	736.750	0.144	NE125	Hall silt loam, 0 to 1 percent slopes	0.000	0.000	0.000	0.000	0.000	0.144	0.000	0.000	0.000
Steele City	NE	Nance	736.750	737.074	0.324	NE125	McPaul silt loam	0.000	0.000	0.000	0.000	0.000	0.324	0.000	0.000	0.000
Steele City	NE	Nance	737.074	738.361	1.287	NE125	Hall silt loam, 0 to 1 percent slopes	0.000	0.000	0.000	0.000	0.000	1.287	0.000	0.000	0.000
Steele City	NE	Nance	738.361	738.508	0.146	NE125	Very sandy alluvial land	0.000	0.000	0.000	0.000	0.146	0.146	0.146	0.000	0.000
Steele City	NE	Nance	738.508	738.671	0.164	NE125	Water	0.000	0.000	0.000	0.000	0.000	0.164	0.000	0.000	0.000
Steele City	NE	Nance	738.671	738.763	0.091	NE125	Riverwash	0.000	0.000	0.000	0.000	0.091	0.091	0.091	0.000	0.000
Steele City	NE	Nance	738.763	739.124	0.361	NE125	Very sandy alluvial land	0.000	0.000	0.000	0.000	0.361	0.361	0.361	0.000	0.000
Steele City	NE	Nance	739.124	739.433	0.310	NE125	Newman loamy fine sand, 1 to 3 percent slopes, eroded	0.307	0.000	0.000	0.000	0.003	0.310	0.000	0.000	0.307
Steele City	NE	Nance	739.433	739.453	0.020	NE125	Aquolls	0.000	0.000	0.000	0.000	0.020	0.020	0.000	0.000	0.000
Steele City	NE	Nance	739.453	739.575	0.122	NE125	Newman loamy fine sand, 1 to 3 percent slopes, eroded	0.121	0.000	0.000	0.000	0.001	0.122	0.000	0.000	0.121
Steele City	NE	Nance	739.575	739.688	0.113	NE125	Cass fine sandy loam	0.000	0.000	0.000	0.000	0.001	0.113	0.000	0.000	0.112
Steele City	NE	Nance	739.688	739.716	0.028	NE125	Newman loamy fine sand, 1 to 3 percent slopes	0.028	0.000	0.000	0.000	0.000	0.028	0.000	0.000	0.028
Steele City	NE	Nance	739.716	739.784	0.068	NE125	Rauville soils	0.000	0.000	0.000	0.000	0.068	0.068	0.000	0.000	0.000

Appendix K – Soils by Milepost – Steele City Segment

Pipeline Segment	State	County	Beginning Milepost	Ending Milepost	Miles	Soil Series	Soil Series Name	Wind (miles)	Water (miles)	Low revegetation on Potential (miles)	Prime Farmland (miles)	Hydric Soils (miles)	Compaction on Prone (miles)	Stoney – Rocky (miles)	Shallow Bedrock (miles)	Droghty (miles)
Steele City	NE	Nance	739.784	739.973	0.189	NE125	Ortello fine sandy loam, 1 to 3 percent slopes	0.000	0.000	0.000	0.000	0.000	0.189	0.000	0.000	0.189
Steele City	NE	Nance	739.973	740.101	0.128	NE125	Ortello very fine sandy loam, 1 to 3 percent slopes	0.000	0.000	0.000	0.000	0.001	0.128	0.000	0.000	0.126
Steele City	NE	Nance	740.101	740.505	0.404	NE125	Hord very fine sandy loam, imperfectly drained, 0 to 1 percent slopes	0.000	0.000	0.000	0.000	0.004	0.404	0.000	0.000	0.000
Steele City	NE	Nance	740.505	740.521	0.016	NE125	Hord very fine sandy loam, 0 to 1 percent slopes	0.000	0.000	0.000	0.000	0.000	0.016	0.000	0.000	0.000
Steele City	NE	Nance	740.521	740.564	0.044	NE125	Hord very fine sandy loam, 3 to 7 percent slopes	0.000	0.000	0.000	0.000	0.000	0.044	0.000	0.000	0.000
Steele City	NE	Nance	740.564	740.707	0.143	NE125	Hord very fine sandy loam, imperfectly drained, 0 to 1 percent slopes	0.000	0.000	0.000	0.000	0.001	0.143	0.000	0.000	0.000
Steele City	NE	Merrick	740.706	741.341	0.635	NE121	Lamo silt loam, wet, 0 to 1 percent slopes	0.000	0.000	0.000	0.000	0.635	0.635	0.000	0.000	0.000
Steele City	NE	Merrick	741.341	741.445	0.104	NE121	Wann loam, 0 to 1 percent slopes	0.000	0.000	0.000	0.000	0.001	0.104	0.000	0.000	0.000
Steele City	NE	Merrick	741.445	741.652	0.207	NE121	Janude sandy loam, 0 to 2 percent slopes	0.000	0.000	0.000	0.000	0.000	0.207	0.000	0.000	0.207
Steele City	NE	Merrick	741.652	741.777	0.125	NE121	Valentine-Boelus loamy fine sands, 3 to 9 percent slopes	0.163	0.038	0.000	0.000	0.000	0.125	0.000	0.000	0.125
Steele City	NE	Merrick	741.777	742.332	0.555	NE121	Valentine-Boelus loamy fine sands, 0 to 3 percent slopes	0.555	0.000	0.000	0.000	0.000	0.555	0.000	0.000	0.555
Steele City	NE	Merrick	742.332	742.366	0.034	NE121	Valentine-Boelus loamy fine sands, 3 to 9 percent slopes	0.044	0.010	0.000	0.000	0.000	0.034	0.000	0.000	0.034
Steele City	NE	Merrick	742.366	742.487	0.122	NE121	Valentine-Boelus loamy fine sands, 0 to 3 percent slopes	0.122	0.000	0.000	0.000	0.000	0.122	0.000	0.000	0.122
Steele City	NE	Merrick	742.487	743.161	0.674	NE121	Valentine-Boelus loamy fine sands, 3 to 9 percent slopes	0.876	0.202	0.000	0.000	0.000	0.674	0.000	0.000	0.674
Steele City	NE	Merrick	743.161	743.396	0.234	NE121	Valentine fine sand, 9 to 20 percent slopes	0.232	0.232	0.000	0.000	0.002	0.234	0.000	0.000	0.232
Steele City	NE	Merrick	743.396	743.709	0.314	NE121	Valentine-Boelus loamy fine sands, 3 to 9 percent slopes	0.408	0.094	0.000	0.000	0.000	0.314	0.000	0.000	0.314
Steele City	NE	Merrick	743.709	743.951	0.241	NE121	Valentine fine sand, 9 to 20 percent slopes	0.239	0.239	0.000	0.000	0.002	0.241	0.000	0.000	0.239
Steele City	NE	Merrick	743.951	744.065	0.114	NE121	Valentine-Boelus loamy fine sands, 3 to 9 percent slopes	0.149	0.034	0.000	0.000	0.000	0.114	0.000	0.000	0.114
Steele City	NE	Merrick	744.065	744.146	0.081	NE121	Thurman loamy fine sand, 3 to 6 percent slopes	0.080	0.000	0.000	0.000	0.001	0.081	0.000	0.000	0.080
Steele City	NE	Merrick	744.146	744.324	0.178	NE121	Valentine-Boelus loamy fine sands, 3 to 9 percent slopes	0.231	0.053	0.000	0.000	0.000	0.178	0.000	0.000	0.178
Steele City	NE	Merrick	744.324	744.602	0.278	NE121	Libory loamy fine sand, 0 to 3 percent slopes	0.275	0.000	0.000	0.000	0.003	0.278	0.000	0.000	0.275
Steele City	NE	Merrick	744.602	744.635	0.033	NE121	Ipage loamy fine sand, 0 to 2 percent slopes	0.033	0.000	0.000	0.000	0.000	0.033	0.000	0.000	0.033
Steele City	NE	Merrick	744.635	744.722	0.087	NE121	Libory loamy fine sand, 0 to 3 percent slopes	0.086	0.000	0.000	0.000	0.001	0.087	0.000	0.000	0.086
Steele City	NE	Merrick	744.722	744.820	0.098	NE121	Ipage loamy fine sand, 0 to 2 percent slopes	0.098	0.000	0.000	0.000	0.000	0.098	0.000	0.000	0.098
Steele City	NE	Merrick	744.820	744.986	0.166	NE121	Novina sandy loam, 0 to 2 percent slopes	0.000	0.000	0.000	0.000	0.002	0.166	0.000	0.000	0.000
Steele City	NE	Merrick	744.986	745.062	0.076	NE121	Platte-Gothenburg complex, channeled, 0 to 3 percent slopes	0.000	0.000	0.000	0.000	0.034	0.076	0.076	0.000	0.000
Steele City	NE	Merrick	745.062	745.122	0.060	NE121	Wann loam, 0 to 1 percent slopes	0.000	0.000	0.000	0.000	0.001	0.060	0.000	0.000	0.000
Steele City	NE	Merrick	745.122	745.157	0.035	NE121	Leshara silt loam, 0 to 2 percent slopes	0.000	0.000	0.000	0.000	0.000	0.035	0.035	0.000	0.000
Steele City	NE	Merrick	745.157	745.522	0.365	NE121	Lockton loam, 0 to 1 percent slopes	0.000	0.000	0.000	0.000	0.000	0.365	0.365	0.000	0.365
Steele City	NE	Merrick	745.522	745.565	0.044	NE121	Lex clay loam, 0 to 1 percent slopes	0.000	0.000	0.043	0.000	0.000	0.044	0.043	0.000	0.000
Steele City	NE	Merrick	745.565	745.690	0.125	NE121	Lockton loam, 0 to 1 percent slopes	0.000	0.000	0.000	0.000	0.000	0.125	0.125	0.000	0.125
Steele City	NE	Merrick	745.690	745.982	0.291	NE121	O'Neill loam, 0 to 1 percent slopes	0.000	0.000	0.000	0.000	0.000	0.291	0.291	0.000	0.291
Steele City	NE	Merrick	745.982	746.169	0.188	NE121	Blendon fine sandy loam, 0 to 2 percent slopes	0.000	0.000	0.000	0.000	0.000	0.188	0.000	0.000	0.000
Steele City	NE	Merrick	746.169	746.220	0.051	NE121	O'Neill loam, 0 to 1 percent slopes	0.000	0.000	0.000	0.000	0.000	0.051	0.051	0.000	0.051

Appendix K – Soils by Milepost – Steele City Segment

Pipeline Segment	State	County	Beginning Milepost	Ending Milepost	Miles	Soil Series	Soil Series Name	Wind (miles)	Water (miles)	Low revegetation on Potential (miles)	Prime Farmland (miles)	Hydric Soils (miles)	Compaction on Prone (miles)	Stoney – Rocky (miles)	Shallow Bedrock (miles)	Droghty (miles)
Steele City	NE	Merrick	746.220	746.397	0.177	NE121	Blendon fine sandy loam, 0 to 2 percent slopes	0.000	0.000	0.000	0.000	0.000	0.177	0.000	0.000	0.000
Steele City	NE	Merrick	746.397	746.444	0.047	NE121	O'Neill sandy loam, 0 to 2 percent slopes	0.000	0.000	0.000	0.000	0.000	0.047	0.047	0.000	0.047
Steele City	NE	Merrick	746.444	746.569	0.125	NE121	Valentine loamy fine sand, 0 to 3 percent slopes	0.125	0.000	0.000	0.000	0.000	0.125	0.000	0.000	0.125
Steele City	NE	Merrick	746.569	747.142	0.572	NE121	O'Neill sandy loam, 0 to 2 percent slopes	0.000	0.000	0.000	0.000	0.000	0.572	0.572	0.000	0.572
Steele City	NE	Merrick	747.142	747.243	0.102	NE121	Blendon fine sandy loam, 0 to 2 percent slopes	0.000	0.000	0.000	0.000	0.000	0.102	0.000	0.000	0.000
Steele City	NE	Merrick	747.243	747.437	0.194	NE121	O'Neill sandy loam, 0 to 2 percent slopes	0.000	0.000	0.000	0.000	0.000	0.194	0.194	0.000	0.194
Steele City	NE	Merrick	747.437	747.493	0.056	NE121	Blendon fine sandy loam, 2 to 6 percent slopes	0.000	0.000	0.000	0.000	0.000	0.056	0.000	0.000	0.000
Steele City	NE	Merrick	747.493	747.740	0.246	NE121	Wann loam, 0 to 1 percent slopes	0.000	0.000	0.000	0.000	0.002	0.246	0.000	0.000	0.000
Steele City	NE	Merrick	747.740	747.866	0.126	NE121	Gibbon loam, 0 to 2 percent slopes	0.000	0.000	0.000	0.000	0.006	0.126	0.006	0.000	0.000
Steele City	NE	Merrick	747.866	747.896	0.030	NE121	Lamo-Saltine complex, 0 to 1 percent slopes	0.000	0.000	0.011	0.000	0.000	0.030	0.000	0.000	0.000
Steele City	NE	Merrick	747.896	748.006	0.110	NE121	Gayville-Caruso complex, 0 to 1 percent slopes	0.000	0.000	0.109	0.000	0.001	0.110	0.000	0.000	0.000
Steele City	NE	Merrick	748.006	748.008	0.002	NE121	Caruso-Gayville complex, 0 to 1 percent slopes	0.000	0.000	0.002	0.000	0.000	0.002	0.000	0.000	0.000
Steele City	NE	Merrick	748.008	748.213	0.204	NE121	Janude sandy loam, 0 to 2 percent slopes	0.000	0.000	0.000	0.000	0.000	0.204	0.000	0.000	0.204
Steele City	NE	Merrick	748.213	748.383	0.170	NE121	Gibbon loam, 0 to 2 percent slopes	0.000	0.000	0.000	0.000	0.009	0.170	0.009	0.000	0.000
Steele City	NE	Merrick	748.383	748.479	0.096	NE121	Caruso-Gayville complex, 0 to 1 percent slopes	0.000	0.000	0.095	0.000	0.001	0.096	0.000	0.000	0.000
Steele City	NE	Merrick	748.479	748.492	0.013	NE121	Gibbon loam, 0 to 2 percent slopes	0.000	0.000	0.000	0.000	0.001	0.013	0.001	0.000	0.000
Steele City	NE	Merrick	748.492	748.603	0.112	NE121	Novina sandy loam, 0 to 2 percent slopes	0.000	0.000	0.000	0.000	0.001	0.112	0.000	0.000	0.000
Steele City	NE	Merrick	748.603	748.604	0.001	NE121	Gibbon loam, 0 to 2 percent slopes	0.000	0.000	0.000	0.000	0.000	0.001	0.000	0.000	0.000
Steele City	NE	Merrick	748.604	748.632	0.029	NE121	Janude sandy loam, 0 to 2 percent slopes	0.000	0.000	0.000	0.000	0.000	0.029	0.000	0.000	0.029
Steele City	NE	Merrick	748.632	748.748	0.115	NE121	Novina sandy loam, 0 to 2 percent slopes	0.000	0.000	0.000	0.000	0.001	0.115	0.000	0.000	0.000
Steele City	NE	Merrick	748.748	748.803	0.055	NE121	Caruso-Gayville complex, 0 to 1 percent slopes	0.000	0.000	0.055	0.000	0.001	0.055	0.000	0.000	0.000
Steele City	NE	Merrick	748.803	749.100	0.297	NE121	Gibbon loam, 0 to 2 percent slopes	0.000	0.000	0.000	0.000	0.015	0.297	0.015	0.000	0.000
Steele City	NE	Merrick	749.100	749.323	0.223	NE121	Lamo clay loam, sandy substratum, 0 to 1 percent slopes	0.000	0.000	0.000	0.000	0.002	0.223	0.221	0.000	0.000
Steele City	NE	Merrick	749.323	749.442	0.120	NE121	Platte loam, wet, 0 to 1 percent slopes	0.000	0.000	0.000	0.000	0.120	0.120	0.120	0.000	0.000
Steele City	NE	Merrick	749.442	749.711	0.269	NE121	Alda loam, 0 to 1 percent slopes	0.000	0.000	0.267	0.000	0.003	0.269	0.267	0.000	0.000
Steele City	NE	Merrick	749.711	749.767	0.055	NE121	Lex clay loam, 0 to 1 percent slopes	0.000	0.000	0.055	0.000	0.001	0.055	0.055	0.000	0.000
Steele City	NE	Merrick	749.767	749.932	0.165	NE121	Janude sandy loam, 0 to 2 percent slopes	0.000	0.000	0.000	0.000	0.000	0.165	0.000	0.000	0.165
Steele City	NE	Merrick	749.932	749.970	0.037	NE121	Fonner variant loamy sand, 0 to 2 percent slopes	0.036	0.000	0.000	0.000	0.002	0.037	0.037	0.000	0.036
Steele City	NE	Merrick	749.970	750.042	0.073	NE121	Platte loam, wet, 0 to 1 percent slopes	0.000	0.000	0.000	0.000	0.073	0.073	0.073	0.000	0.000
Steele City	NE	Merrick	750.042	750.114	0.072	NE121	Fonner sandy loam, 0 to 2 percent slopes	0.000	0.000	0.000	0.000	0.001	0.072	0.071	0.000	0.071
Steele City	NE	Merrick	750.114	750.232	0.118	NE121	Platte loam, wet, 0 to 1 percent slopes	0.000	0.000	0.000	0.000	0.118	0.118	0.118	0.000	0.000
Steele City	NE	Merrick	750.232	750.468	0.236	NE121	Fonner variant loamy sand, 0 to 2 percent slopes	0.225	0.000	0.000	0.000	0.012	0.236	0.236	0.000	0.225
Steele City	NE	Merrick	750.468	750.559	0.091	NE121	Inavale loamy fine sand, 0 to 3 percent slopes	0.091	0.000	0.000	0.000	0.000	0.091	0.000	0.000	0.091
Steele City	NE	Merrick	750.559	750.617	0.059	NE121	Fonner variant loamy sand, 0 to 2 percent slopes	0.056	0.000	0.000	0.000	0.003	0.059	0.059	0.000	0.056
Steele City	NE	Merrick	750.617	750.650	0.033	NE121	Inavale loamy fine sand, 0 to 3 percent slopes	0.033	0.000	0.000	0.000	0.000	0.033	0.000	0.000	0.033
Steele City	NE	Merrick	750.650	750.791	0.141	NE121	Fonner variant loamy sand, 0 to 2 percent slopes	0.134	0.000	0.000	0.000	0.007	0.141	0.141	0.000	0.134
Steele City	NE	Merrick	750.791	750.831	0.040	NE121	Inavale loamy fine sand, 0 to 3 percent slopes	0.040	0.000	0.000	0.000	0.000	0.040	0.000	0.000	0.040
Steele City	NE	Merrick	750.831	751.715	0.884	NE121	Fonner variant loamy sand, 0 to 2 percent slopes	0.840	0.000	0.000	0.000	0.044	0.884	0.884	0.000	0.840
Steele City	NE	Merrick	751.715	752.101	0.386	NE121	Lawet variant fine sandy loam, 0 to 1 percent slopes	0.000	0.000	0.386	0.000	0.386	0.386	0.386	0.000	0.000
Steele City	NE	Merrick	752.101	752.160	0.060	NE121	Leshara silt loam, 0 to 2 percent slopes	0.000	0.000	0.000	0.000	0.001	0.060	0.059	0.000	0.000
Steele City	NE	Merrick	752.160	752.202	0.042	NE121	Alda sandy loam, 0 to 2 percent slopes	0.000	0.000	0.041	0.000	0.000	0.042	0.041	0.000	0.000
Steele City	NE	Merrick	752.202	752.420	0.218	NE121	Fonner sandy loam, 0 to 2 percent slopes	0.000	0.000	0.000	0.000	0.002	0.218	0.216	0.000	0.216
Steele City	NE	Merrick	752.420	752.552	0.132	NE121	Janude sandy loam, 0 to 2 percent slopes	0.000	0.000	0.000	0.000	0.000	0.132	0.000	0.000	0.132
Steele City	NE	Merrick	752.552	752.701	0.149	NE121	Leshara silt loam, 0 to 2 percent slopes	0.000	0.000	0.000	0.000	0.001	0.149	0.148	0.000	0.000

Appendix K – Soils by Milepost – Steele City Segment

Pipeline Segment	State	County	Beginning Milepost	Ending Milepost	Miles	Soil Series	Soil Series Name	Wind (miles)	Water (miles)	Low revegetation on Potential (miles)	Prime Farmland (miles)	Hydric Soils (miles)	Compaction on Prone (miles)	Stoney – Rocky (miles)	Shallow Bedrock (miles)	Droghty (miles)
Steele City	NE	Merrick	752.701	752.797	0.096	NE121	Gibbon loam, 0 to 2 percent slopes	0.000	0.000	0.000	0.000	0.005	0.096	0.005	0.000	0.000
Steele City	NE	Merrick	752.797	753.264	0.467	NE121	Lamo clay loam, sandy substratum, 0 to 1 percent slopes	0.000	0.000	0.000	0.000	0.005	0.467	0.462	0.000	0.000
Steele City	NE	Merrick	753.264	753.484	0.220	NE121	Janude sandy loam, 0 to 2 percent slopes	0.000	0.000	0.000	0.000	0.000	0.220	0.000	0.000	0.220
Steele City	NE	Merrick	753.484	753.626	0.143	NE121	Cozad loam, wet substratum, 0 to 1 percent slopes	0.000	0.000	0.000	0.000	0.001	0.143	0.000	0.000	0.000
Steele City	NE	Merrick	753.626	753.689	0.063	NE121	Platte-Gothenburg complex, channeled, 0 to 3 percent slopes	0.000	0.000	0.000	0.000	0.028	0.063	0.063	0.000	0.000
Steele City	NE	Merrick	753.689	754.035	0.346	NE121	Cozad loam, wet substratum, 0 to 1 percent slopes	0.000	0.000	0.000	0.000	0.003	0.346	0.000	0.000	0.000
Steele City	NE	Merrick	754.035	754.044	0.009	NE121	Janude sandy loam, 0 to 2 percent slopes	0.000	0.000	0.000	0.000	0.000	0.009	0.000	0.000	0.009
Steele City	NE	Merrick	754.044	754.118	0.075	NE121	Alda sandy loam, 0 to 2 percent slopes	0.000	0.000	0.074	0.000	0.001	0.075	0.074	0.000	0.000
Steele City	NE	Merrick	754.118	754.158	0.040	NE121	Gothenburg soils, 0 to 3 percent slopes	0.000	0.000	0.000	0.000	0.040	0.040	0.040	0.000	0.000
Steele City	NE	Merrick	754.158	754.272	0.113	NE121	Water	0.000	0.000	0.000	0.000	0.000	0.113	0.000	0.000	0.000
Steele City	NE	Merrick	754.272	754.323	0.051	NE121	Gothenburg soils, 0 to 3 percent slopes	0.000	0.000	0.000	0.000	0.051	0.051	0.051	0.000	0.000
Steele City	NE	Merrick	754.323	754.342	0.020	NE121	Water	0.000	0.000	0.000	0.000	0.000	0.020	0.000	0.000	0.000
Steele City	NE	Merrick	754.342	754.413	0.070	NE121	Gothenburg soils, 0 to 3 percent slopes	0.000	0.000	0.000	0.000	0.070	0.070	0.070	0.000	0.000
Steele City	NE	Merrick	754.413	754.426	0.013	NE121	Water	0.000	0.000	0.000	0.000	0.000	0.013	0.000	0.000	0.000
Steele City	NE	Merrick	754.426	754.547	0.122	NE121	Gothenburg soils, 0 to 3 percent slopes	0.000	0.000	0.000	0.000	0.122	0.122	0.122	0.000	0.000
Steele City	NE	Merrick	754.547	754.589	0.042	NE121	Platte loam, 0 to 2 percent slopes	0.000	0.000	0.000	0.000	0.002	0.042	0.042	0.000	0.000
Steele City	NE	Merrick	754.589	754.629	0.040	NE121	Alda sandy loam, 0 to 2 percent slopes	0.000	0.000	0.040	0.000	0.000	0.040	0.040	0.000	0.000
Steele City	NE	Merrick	754.629	754.685	0.056	NE121	Inavale loamy fine sand, 0 to 3 percent slopes	0.056	0.000	0.000	0.000	0.000	0.056	0.000	0.000	0.056
Steele City	NE	Merrick	754.685	754.892	0.208	NE121	Alda sandy loam, 0 to 2 percent slopes	0.000	0.000	0.206	0.000	0.002	0.208	0.206	0.000	0.000
Steele City	NE	Merrick	754.892	754.966	0.073	NE121	Alda loam, 0 to 1 percent slopes	0.000	0.000	0.073	0.000	0.001	0.073	0.073	0.000	0.000
Steele City	NE	Merrick	754.966	754.987	0.021	NE121	Alda sandy loam, 0 to 2 percent slopes	0.000	0.000	0.021	0.000	0.000	0.021	0.021	0.000	0.000
Steele City	NE	Merrick	754.987	755.107	0.120	NE121	Barney loam, 0 to 2 percent slopes	0.000	0.000	0.000	0.000	0.120	0.120	0.120	0.000	0.000
Steele City	NE	Merrick	755.107	755.170	0.063	NE121	Novina sandy loam, 0 to 2 percent slopes	0.000	0.000	0.000	0.000	0.001	0.063	0.000	0.000	0.000
Steele City	NE	Merrick	755.170	755.207	0.037	NE121	Wann sandy loam, 0 to 2 percent slopes	0.000	0.000	0.000	0.000	0.000	0.037	0.000	0.000	0.000
Steele City	NE	Merrick	755.207	755.296	0.089	NE121	Lex loam, 0 to 1 percent slopes	0.000	0.000	0.088	0.000	0.001	0.089	0.088	0.000	0.000
Steele City	NE	Merrick	755.296	755.520	0.224	NE121	Gothenburg soils, 0 to 3 percent slopes	0.000	0.000	0.000	0.000	0.224	0.224	0.224	0.000	0.000
Steele City	NE	Merrick	755.520	755.639	0.118	NE121	Gravel pit	0.000	0.000	0.000	0.000	0.000	0.118	0.000	0.000	0.000
Steele City	NE	Merrick	755.639	755.692	0.053	NE121	Inavale loamy fine sand, 0 to 3 percent slopes	0.053	0.000	0.000	0.000	0.000	0.053	0.000	0.000	0.053
Steele City	NE	Merrick	755.692	755.803	0.112	NE121	Fonner variant loamy sand, 0 to 2 percent slopes	0.106	0.000	0.000	0.000	0.006	0.112	0.112	0.000	0.106
Steele City	NE	Merrick	755.803	755.910	0.106	NE121	Platte loam, 0 to 2 percent slopes	0.000	0.000	0.000	0.000	0.005	0.106	0.106	0.000	0.000
Steele City	NE	Merrick	755.910	755.963	0.054	NE121	Fonner variant loamy sand, 0 to 2 percent slopes	0.051	0.000	0.000	0.000	0.003	0.054	0.054	0.000	0.051
Steele City	NE	Merrick	755.963	756.019	0.056	NE121	Gothenburg soils, 0 to 3 percent slopes	0.000	0.000	0.000	0.000	0.056	0.056	0.056	0.000	0.000
Steele City	NE	Merrick	756.019	756.171	0.152	NE121	Barney loam, 0 to 2 percent slopes	0.000	0.000	0.000	0.000	0.152	0.152	0.152	0.000	0.000
Steele City	NE	Merrick	756.171	756.202	0.031	NE121	Fonner variant loamy sand, 0 to 2 percent slopes	0.030	0.000	0.000	0.000	0.002	0.031	0.031	0.000	0.030
Steele City	NE	Hamilton	756.202	756.235	0.033	NE081	Fonner variant loamy sand, 0 to 2 percent slopes	0.033	0.000	0.000	0.000	0.000	0.033	0.000	0.000	0.033
Steele City	NE	Hamilton	756.235	756.316	0.081	NE081	Platte loam, 0 to 1 percent slopes	0.000	0.000	0.000	0.000	0.001	0.081	0.080	0.000	0.000
Steele City	NE	Hamilton	756.316	756.394	0.078	NE081	Alda loam, 0 to 2 percent slopes	0.000	0.000	0.078	0.000	0.000	0.078	0.078	0.000	0.000
Steele City	NE	Hamilton	756.394	756.568	0.174	NE081	Cozad silt loam, wet substratum, 0 to 1 percent slopes	0.000	0.000	0.000	0.000	0.000	0.174	0.000	0.000	0.000
Steele City	NE	Hamilton	756.568	756.571	0.003	NE081	Cozad silt loam, 1 to 3 percent slopes	0.000	0.000	0.000	0.000	0.000	0.003	0.000	0.000	0.000
Steele City	NE	Hamilton	756.571	756.896	0.325	NE081	Hord silt loam, 0 to 1 percent slopes	0.000	0.000	0.000	0.000	0.000	0.325	0.000	0.000	0.000
Steele City	NE	Hamilton	756.896	756.965	0.069	NE081	Ortello fine sandy loam, 1 to 3 percent slopes	0.000	0.000	0.000	0.000	0.000	0.069	0.000	0.000	0.000
Steele City	NE	Hamilton	756.965	757.101	0.135	NE081	Thurman fine sandy loam, 11 to 30 percent slopes	0.000	0.135	0.000	0.000	0.000	0.135	0.000	0.000	0.135

Appendix K – Soils by Milepost – Steele City Segment

Pipeline Segment	State	County	Beginning Milepost	Ending Milepost	Miles	Soil Series	Soil Series Name	Wind (miles)	Water (miles)	Low revegetation on Potential (miles)	Prime Farmland (miles)	Hydric Soils (miles)	Compaction on Prone (miles)	Stoney – Rocky (miles)	Shallow Bedrock (miles)	Droghty (miles)
Steele City	NE	Hamilton	757.101	757.149	0.048	NE081	Uly silt loam, 3 to 6 percent slopes	0.000	0.000	0.000	0.000	0.000	0.048	0.000	0.000	0.000
Steele City	NE	Hamilton	757.149	757.309	0.160	NE081	Coly silt loam, 6 to 11 percent slopes, eroded	0.000	0.160	0.000	0.000	0.000	0.160	0.000	0.000	0.000
Steele City	NE	Hamilton	757.309	757.340	0.031	NE081	Uly silt loam, 3 to 6 percent slopes	0.000	0.000	0.000	0.000	0.000	0.031	0.000	0.000	0.000
Steele City	NE	Hamilton	757.340	757.422	0.083	NE081	Holder silt loam, 0 to 1 percent slopes	0.000	0.000	0.000	0.000	0.002	0.083	0.000	0.000	0.000
Steele City	NE	Hamilton	757.422	757.430	0.008	NE081	Uly silt loam, 3 to 6 percent slopes	0.000	0.000	0.000	0.000	0.000	0.008	0.000	0.000	0.000
Steele City	NE	Hamilton	757.430	757.470	0.040	NE081	Holder silt loam, 0 to 1 percent slopes	0.000	0.000	0.000	0.000	0.001	0.040	0.000	0.000	0.000
Steele City	NE	Hamilton	757.470	757.497	0.027	NE081	Uly silt loam, 3 to 6 percent slopes	0.000	0.000	0.000	0.000	0.000	0.027	0.000	0.000	0.000
Steele City	NE	Hamilton	757.497	757.552	0.055	NE081	Coly silt loam, 11 to 30 percent slopes	0.000	0.055	0.000	0.000	0.000	0.055	0.000	0.000	0.000
Steele City	NE	Hamilton	757.552	757.570	0.019	NE081	Uly silt loam, 3 to 6 percent slopes	0.000	0.000	0.000	0.000	0.000	0.019	0.000	0.000	0.000
Steele City	NE	Hamilton	757.570	757.621	0.051	NE081	Holder silt loam, 0 to 1 percent slopes	0.000	0.000	0.000	0.000	0.001	0.051	0.000	0.000	0.000
Steele City	NE	Hamilton	757.621	757.682	0.061	NE081	Coly silt loam, 11 to 30 percent slopes	0.000	0.061	0.000	0.000	0.000	0.061	0.000	0.000	0.000
Steele City	NE	Hamilton	757.682	757.730	0.047	NE081	Holder silt loam, 0 to 1 percent slopes	0.000	0.000	0.000	0.000	0.001	0.047	0.000	0.000	0.000
Steele City	NE	Hamilton	757.730	757.768	0.038	NE081	Coly silt loam, 6 to 11 percent slopes, eroded	0.000	0.038	0.000	0.000	0.000	0.038	0.000	0.000	0.000
Steele City	NE	Hamilton	757.768	758.517	0.749	NE081	Holder silt loam, 0 to 1 percent slopes	0.000	0.000	0.000	0.000	0.015	0.749	0.000	0.000	0.000
Steele City	NE	Hamilton	758.517	758.560	0.043	NE081	Holder silt loam, 1 to 3 percent slopes	0.000	0.000	0.000	0.000	0.001	0.043	0.000	0.000	0.000
Steele City	NE	Hamilton	758.560	759.448	0.889	NE081	Holder silt loam, 0 to 1 percent slopes	0.000	0.000	0.000	0.000	0.018	0.889	0.000	0.000	0.000
Steele City	NE	Hamilton	759.448	759.778	0.330	NE081	Butler silt loam, 0 to 1 percent slopes	0.000	0.000	0.000	0.000	0.007	0.330	0.000	0.000	0.000
Steele City	NE	Hamilton	759.778	759.844	0.066	NE081	Holder silt loam, 1 to 3 percent slopes	0.000	0.000	0.000	0.000	0.001	0.066	0.000	0.000	0.000
Steele City	NE	Hamilton	759.844	761.057	1.213	NE081	Holder silt loam, 0 to 1 percent slopes	0.000	0.000	0.000	0.000	0.024	1.213	0.000	0.000	0.000
Steele City	NE	Hamilton	761.057	761.327	0.270	NE081	Hastings silt loam, 0 to 1 percent slopes	0.000	0.000	0.000	0.000	0.005	0.270	0.000	0.000	0.000
Steele City	NE	Hamilton	761.327	762.266	0.939	NE081	Holder silt loam, 0 to 1 percent slopes	0.000	0.000	0.000	0.000	0.019	0.939	0.000	0.000	0.000
Steele City	NE	Hamilton	762.266	762.360	0.094	NE081	Holder silt loam, 1 to 3 percent slopes	0.000	0.000	0.000	0.000	0.002	0.094	0.000	0.000	0.000
Steele City	NE	Hamilton	762.360	762.671	0.311	NE081	Holder silty clay loam, 3 to 6 percent slopes, eroded	0.000	0.000	0.000	0.000	0.000	0.311	0.000	0.000	0.000
Steele City	NE	Hamilton	762.671	762.683	0.012	NE081	Holder silt loam, 3 to 6 percent slopes	0.000	0.000	0.000	0.000	0.000	0.012	0.000	0.000	0.000
Steele City	NE	Hamilton	762.683	762.787	0.104	NE081	Hord silt loam, 0 to 1 percent slopes	0.000	0.000	0.000	0.000	0.000	0.104	0.000	0.000	0.000
Steele City	NE	Hamilton	762.787	762.876	0.089	NE081	Holder silt loam, 3 to 6 percent slopes	0.000	0.000	0.000	0.000	0.000	0.089	0.000	0.000	0.000
Steele City	NE	Hamilton	762.876	762.960	0.084	NE081	Holder silt loam, 1 to 3 percent slopes	0.000	0.000	0.000	0.000	0.002	0.084	0.000	0.000	0.000
Steele City	NE	York	762.960	763.139	0.179	NE185	Holder silt loam, 1 to 3 percent slopes	0.000	0.000	0.000	0.000	0.000	0.179	0.000	0.000	0.000
Steele City	NE	York	763.139	763.202	0.063	NE185	Hord silt loam, terrace, 0 to 1 percent slopes	0.000	0.000	0.000	0.000	0.000	0.063	0.000	0.000	0.000
Steele City	NE	York	763.202	763.210	0.007	NE185	Silty alluvial land	0.000	0.000	0.000	0.000	0.000	0.007	0.000	0.000	0.000
Steele City	NE	York	763.210	763.254	0.044	NE185	Hord silt loam, terrace, 0 to 1 percent slopes	0.000	0.000	0.000	0.000	0.000	0.044	0.000	0.000	0.000
Steele City	NE	York	763.254	763.309	0.055	NE185	Silty alluvial land	0.000	0.000	0.000	0.000	0.001	0.055	0.000	0.000	0.000
Steele City	NE	York	763.309	763.490	0.181	NE185	Hord silt loam, terrace, 0 to 1 percent slopes	0.000	0.000	0.000	0.000	0.000	0.181	0.000	0.000	0.000
Steele City	NE	York	763.490	763.543	0.053	NE185	Silty alluvial land	0.000	0.000	0.000	0.000	0.001	0.053	0.000	0.000	0.000
Steele City	NE	York	763.543	763.618	0.075	NE185	Hord silt loam, terrace, 1 to 3 percent slopes	0.000	0.000	0.000	0.000	0.000	0.075	0.000	0.000	0.000
Steele City	NE	York	763.618	763.708	0.090	NE185	Hastings silty clay loam, 3 to 6 percent slopes, eroded	0.000	0.000	0.000	0.000	0.000	0.090	0.000	0.000	0.000
Steele City	NE	York	763.708	763.773	0.065	NE185	Holder silt loam, 0 to 1 percent slopes	0.000	0.000	0.000	0.000	0.001	0.065	0.000	0.000	0.000
Steele City	NE	York	763.773	763.796	0.023	NE185	Hastings silty clay loam, 3 to 6 percent slopes, eroded	0.000	0.000	0.000	0.000	0.000	0.023	0.000	0.000	0.000
Steele City	NE	York	763.796	763.999	0.203	NE185	Holder silt loam, 0 to 1 percent slopes	0.000	0.000	0.000	0.000	0.004	0.203	0.000	0.000	0.000
Steele City	NE	York	763.999	764.027	0.028	NE185	Hastings silty clay loam, 3 to 6 percent slopes, eroded	0.000	0.000	0.000	0.000	0.000	0.028	0.000	0.000	0.000
Steele City	NE	York	764.027	765.131	1.104	NE185	Holder silt loam, 0 to 1 percent slopes	0.000	0.000	0.000	0.000	0.022	1.104	0.000	0.000	0.000
Steele City	NE	York	765.131	765.247	0.116	NE185	Hastings silty clay loam, 3 to 6 percent slopes,	0.000	0.000	0.000	0.000	0.000	0.116	0.000	0.000	0.000

Appendix K – Soils by Milepost – Steele City Segment

Pipeline Segment	State	County	Beginning Milepost	Ending Milepost	Miles	Soil Series	Soil Series Name	Wind (miles)	Water (miles)	Low revegetation on Potential (miles)	Prime Farmland (miles)	Hydric Soils (miles)	Compaction on Prone (miles)	Stoney – Rocky (miles)	Shallow Bedrock (miles)	Droghty (miles)
							eroded									
Steele City	NE	York	765.247	765.328	0.081	NE185	Hobbs silt loam, 0 to 2 percent slopes	0.000	0.000	0.000	0.000	0.000	0.081	0.000	0.000	0.000
Steele City	NE	York	765.328	765.388	0.060	NE185	Hastings silty clay loam, 3 to 6 percent slopes, eroded	0.000	0.000	0.000	0.000	0.000	0.060	0.000	0.000	0.000
Steele City	NE	York	765.388	765.621	0.233	NE185	Holder silt loam, 0 to 1 percent slopes	0.000	0.000	0.000	0.000	0.005	0.233	0.000	0.000	0.000
Steele City	NE	York	765.621	765.970	0.349	NE185	Holder silt loam, 1 to 3 percent slopes	0.000	0.000	0.000	0.000	0.000	0.349	0.000	0.000	0.000
Steele City	NE	York	765.970	766.144	0.174	NE185	Holder silt loam, 0 to 1 percent slopes	0.000	0.000	0.000	0.000	0.003	0.174	0.000	0.000	0.000
Steele City	NE	York	766.144	766.339	0.195	NE185	Holder silt loam, 1 to 3 percent slopes	0.000	0.000	0.000	0.000	0.000	0.195	0.000	0.000	0.000
Steele City	NE	York	766.339	766.382	0.043	NE185	Fillmore silt loam, 0 to 1 percent slopes	0.000	0.000	0.000	0.000	0.043	0.043	0.000	0.000	0.000
Steele City	NE	York	766.382	766.438	0.056	NE185	Holder silt loam, 0 to 1 percent slopes	0.000	0.000	0.000	0.000	0.001	0.056	0.000	0.000	0.000
Steele City	NE	York	766.438	766.561	0.123	NE185	Holder silt loam, 1 to 3 percent slopes	0.000	0.000	0.000	0.000	0.000	0.123	0.000	0.000	0.000
Steele City	NE	York	766.561	766.663	0.102	NE185	Fillmore silt loam, 0 to 1 percent slopes	0.000	0.000	0.000	0.000	0.102	0.102	0.000	0.000	0.000
Steele City	NE	York	766.663	766.975	0.312	NE185	Holder silt loam, 1 to 3 percent slopes	0.000	0.000	0.000	0.000	0.000	0.312	0.000	0.000	0.000
Steele City	NE	York	766.975	767.081	0.106	NE185	Hastings silt loam, 3 to 6 percent slopes	0.000	0.000	0.000	0.000	0.000	0.106	0.000	0.000	0.000
Steele City	NE	York	767.081	767.181	0.100	NE185	Hord silt loam, terrace, 1 to 3 percent slopes	0.000	0.000	0.000	0.000	0.000	0.100	0.000	0.000	0.000
Steele City	NE	York	767.181	767.519	0.339	NE185	Butler silt loam, 0 to 1 percent slopes	0.000	0.000	0.000	0.000	0.017	0.339	0.000	0.000	0.000
Steele City	NE	York	767.519	767.884	0.365	NE185	Crete silt loam, 0 to 1 percent slopes	0.000	0.000	0.000	0.000	0.007	0.365	0.000	0.000	0.000
Steele City	NE	York	767.884	767.960	0.076	NE185	Fillmore silt loam, 0 to 1 percent slopes	0.000	0.000	0.000	0.000	0.076	0.076	0.000	0.000	0.000
Steele City	NE	York	767.960	768.103	0.143	NE185	Crete silt loam, 0 to 1 percent slopes	0.000	0.000	0.000	0.000	0.003	0.143	0.000	0.000	0.000
Steele City	NE	York	768.103	768.201	0.098	NE185	Holder silt loam, 1 to 3 percent slopes	0.000	0.000	0.000	0.000	0.000	0.098	0.000	0.000	0.000
Steele City	NE	York	768.201	768.270	0.069	NE185	Crete silt loam, 0 to 1 percent slopes	0.000	0.000	0.000	0.000	0.001	0.069	0.000	0.000	0.000
Steele City	NE	York	768.270	768.285	0.015	NE185	Hord silt loam, terrace, 1 to 3 percent slopes	0.000	0.000	0.000	0.000	0.000	0.015	0.000	0.000	0.000
Steele City	NE	York	768.285	768.380	0.096	NE185	Fillmore silt loam, 0 to 1 percent slopes	0.000	0.000	0.000	0.000	0.096	0.096	0.000	0.000	0.000
Steele City	NE	York	768.380	768.526	0.146	NE185	Hord silt loam, terrace, 1 to 3 percent slopes	0.000	0.000	0.000	0.000	0.000	0.146	0.000	0.000	0.000
Steele City	NE	York	768.526	768.695	0.169	NE185	Holder silt loam, 1 to 3 percent slopes	0.000	0.000	0.000	0.000	0.000	0.169	0.000	0.000	0.000
Steele City	NE	York	768.695	769.270	0.576	NE185	Hastings silt loam, 0 to 1 percent slopes	0.000	0.000	0.000	0.000	0.012	0.576	0.000	0.000	0.000
Steele City	NE	York	769.270	769.460	0.189	NE185	Holder silt loam, 1 to 3 percent slopes	0.000	0.000	0.000	0.000	0.000	0.189	0.000	0.000	0.000
Steele City	NE	York	769.460	769.635	0.175	NE185	Hastings silt loam, 0 to 1 percent slopes	0.000	0.000	0.000	0.000	0.004	0.175	0.000	0.000	0.000
Steele City	NE	York	769.635	769.736	0.101	NE185	Fillmore silt loam, drained, 0 to 1 percent slopes	0.000	0.000	0.000	0.000	0.005	0.101	0.000	0.000	0.000
Steele City	NE	York	769.736	769.836	0.100	NE185	Hastings silt loam, 0 to 1 percent slopes	0.000	0.000	0.000	0.000	0.002	0.100	0.000	0.000	0.000
Steele City	NE	York	769.836	769.955	0.119	NE185	Hastings silt loam, 1 to 3 percent slopes	0.000	0.000	0.000	0.000	0.002	0.119	0.000	0.000	0.000
Steele City	NE	York	769.955	771.427	1.472	NE185	Hastings silt loam, 0 to 1 percent slopes	0.000	0.000	0.000	0.000	0.029	1.472	0.000	0.000	0.000
Steele City	NE	York	771.427	771.466	0.039	NE185	Butler silt loam, 0 to 1 percent slopes	0.000	0.000	0.000	0.000	0.002	0.039	0.000	0.000	0.000
Steele City	NE	York	771.466	772.511	1.045	NE185	Hastings silt loam, 0 to 1 percent slopes	0.000	0.000	0.000	0.000	0.021	1.045	0.000	0.000	0.000
Steele City	NE	York	772.511	772.538	0.027	NE185	Hastings silt loam, 1 to 3 percent slopes	0.000	0.000	0.000	0.000	0.001	0.027	0.000	0.000	0.000
Steele City	NE	York	772.538	772.710	0.173	NE185	Hastings silt loam, 3 to 6 percent slopes	0.000	0.000	0.000	0.000	0.000	0.173	0.000	0.000	0.000
Steele City	NE	York	772.710	772.824	0.113	NE185	Hord silt loam, terrace, 1 to 3 percent slopes	0.000	0.000	0.000	0.000	0.000	0.113	0.000	0.000	0.000
Steele City	NE	York	772.824	773.017	0.193	NE185	Hord silt loam, terrace, 0 to 1 percent slopes	0.000	0.000	0.000	0.000	0.000	0.193	0.000	0.000	0.000
Steele City	NE	York	773.017	773.165	0.149	NE185	Silty alluvial land	0.000	0.000	0.000	0.000	0.001	0.149	0.000	0.000	0.000
Steele City	NE	York	773.165	773.284	0.119	NE185	Hastings silt loam, 3 to 6 percent slopes	0.000	0.000	0.000	0.000	0.000	0.119	0.000	0.000	0.000
Steele City	NE	York	773.284	773.409	0.125	NE185	Uly-Hobbs silt loams, 11 to 30 percent slopes	0.000	0.069	0.000	0.000	0.000	0.125	0.000	0.000	0.000
Steele City	NE	York	773.409	773.476	0.067	NE185	Hastings silty clay loam, 3 to 6 percent slopes, eroded	0.000	0.000	0.000	0.000	0.000	0.067	0.000	0.000	0.000
Steele City	NE	York	773.476	773.530	0.055	NE185	Hastings silt loam, 0 to 1 percent slopes	0.000	0.000	0.000	0.000	0.001	0.055	0.000	0.000	0.000
Steele City	NE	York	773.530	773.568	0.038	NE185	Hastings silty clay loam, 3 to 6 percent slopes,	0.000	0.000	0.000	0.000	0.000	0.038	0.000	0.000	0.000

Appendix K – Soils by Milepost – Steele City Segment

Pipeline Segment	State	County	Beginning Milepost	Ending Milepost	Miles	Soil Series	Soil Series Name	Wind (miles)	Water (miles)	Low revegetation on Potential (miles)	Prime Farmland (miles)	Hydric Soils (miles)	Compaction on Prone (miles)	Stoney – Rocky (miles)	Shallow Bedrock (miles)	Droghty (miles)
							eroded									
Steele City	NE	York	773.568	773.614	0.046	NE185	Hastings silt loam, 0 to 1 percent slopes	0.000	0.000	0.000	0.000	0.001	0.046	0.000	0.000	0.000
Steele City	NE	York	773.614	773.641	0.027	NE185	Hastings silty clay loam, 3 to 6 percent slopes, eroded	0.000	0.000	0.000	0.000	0.000	0.027	0.000	0.000	0.000
Steele City	NE	York	773.641	773.897	0.256	NE185	Hastings silt loam, 0 to 1 percent slopes	0.000	0.000	0.000	0.000	0.005	0.256	0.000	0.000	0.000
Steele City	NE	York	773.897	774.011	0.113	NE185	Hastings silty clay loam, 3 to 6 percent slopes, eroded	0.000	0.000	0.000	0.000	0.000	0.113	0.000	0.000	0.000
Steele City	NE	York	774.011	774.104	0.094	NE185	Hastings silt loam, 0 to 1 percent slopes	0.000	0.000	0.000	0.000	0.002	0.094	0.000	0.000	0.000
Steele City	NE	York	774.104	774.175	0.071	NE185	Fillmore silt loam, 0 to 1 percent slopes	0.000	0.000	0.000	0.000	0.071	0.071	0.000	0.000	0.000
Steele City	NE	York	774.175	774.365	0.190	NE185	Hastings silt loam, 0 to 1 percent slopes	0.000	0.000	0.000	0.000	0.004	0.190	0.000	0.000	0.000
Steele City	NE	York	774.365	774.437	0.073	NE185	Hastings silt loam, 1 to 3 percent slopes	0.000	0.000	0.000	0.000	0.001	0.073	0.000	0.000	0.000
Steele City	NE	York	774.437	776.030	1.593	NE185	Hastings silt loam, 0 to 1 percent slopes	0.000	0.000	0.000	0.000	0.032	1.593	0.000	0.000	0.000
Steele City	NE	York	776.030	776.079	0.048	NE185	Hastings silt loam, 3 to 6 percent slopes	0.000	0.000	0.000	0.000	0.000	0.048	0.000	0.000	0.000
Steele City	NE	York	776.079	776.116	0.038	NE185	Hastings silt loam, 6 to 11 percent slopes	0.000	0.038	0.000	0.000	0.000	0.038	0.000	0.000	0.000
Steele City	NE	York	776.116	776.163	0.047	NE185	Silty alluvial land	0.000	0.000	0.000	0.000	0.000	0.047	0.000	0.000	0.000
Steele City	NE	York	776.163	776.205	0.042	NE185	Hastings silty clay loam, 6 to 11 percent slopes, eroded	0.000	0.042	0.000	0.000	0.000	0.042	0.000	0.000	0.000
Steele City	NE	York	776.205	776.433	0.227	NE185	Hastings silt loam, 0 to 1 percent slopes	0.000	0.000	0.000	0.000	0.005	0.227	0.000	0.000	0.000
Steele City	NE	York	776.433	776.568	0.136	NE185	Fillmore silt loam, drained, 0 to 1 percent slopes	0.000	0.000	0.000	0.000	0.007	0.136	0.000	0.000	0.000
Steele City	NE	York	776.568	777.425	0.857	NE185	Hastings silt loam, 0 to 1 percent slopes	0.000	0.000	0.000	0.000	0.017	0.857	0.000	0.000	0.000
Steele City	NE	York	777.425	777.499	0.074	NE185	Hastings silty clay loam, 6 to 11 percent slopes, eroded	0.000	0.074	0.000	0.000	0.000	0.074	0.000	0.000	0.000
Steele City	NE	York	777.499	777.685	0.186	NE185	Hastings silt loam, 0 to 1 percent slopes	0.000	0.000	0.000	0.000	0.004	0.186	0.000	0.000	0.000
Steele City	NE	York	777.685	777.909	0.224	NE185	Hastings silt loam, 3 to 6 percent slopes	0.000	0.000	0.000	0.000	0.000	0.224	0.000	0.000	0.000
Steele City	NE	York	777.909	778.128	0.218	NE185	Hastings silt loam, 0 to 1 percent slopes	0.000	0.000	0.000	0.000	0.004	0.218	0.000	0.000	0.000
Steele City	NE	York	778.128	778.286	0.159	NE185	Hastings silty clay loam, 3 to 6 percent slopes, eroded	0.000	0.000	0.000	0.000	0.000	0.159	0.000	0.000	0.000
Steele City	NE	York	778.286	778.390	0.104	NE185	Hord silt loam, terrace, 1 to 3 percent slopes	0.000	0.000	0.000	0.000	0.000	0.104	0.000	0.000	0.000
Steele City	NE	York	778.390	778.491	0.100	NE185	Silty alluvial land	0.000	0.000	0.000	0.000	0.001	0.100	0.000	0.000	0.000
Steele City	NE	York	778.491	778.571	0.080	NE185	Hord silt loam, terrace, 0 to 1 percent slopes	0.000	0.000	0.000	0.000	0.000	0.080	0.000	0.000	0.000
Steele City	NE	York	778.571	778.648	0.077	NE185	Hord silt loam, terrace, 1 to 3 percent slopes	0.000	0.000	0.000	0.000	0.000	0.077	0.000	0.000	0.000
Steele City	NE	York	778.648	778.981	0.333	NE185	Hastings silty clay loam, 3 to 6 percent slopes, eroded	0.000	0.000	0.000	0.000	0.000	0.333	0.000	0.000	0.000
Steele City	NE	York	778.981	779.998	1.018	NE185	Hastings silt loam, 0 to 1 percent slopes	0.000	0.000	0.000	0.000	0.020	1.018	0.000	0.000	0.000
Steele City	NE	York	779.998	780.058	0.059	NE185	Hastings silt loam, 3 to 6 percent slopes	0.000	0.000	0.000	0.000	0.000	0.059	0.000	0.000	0.000
Steele City	NE	York	780.058	780.127	0.069	NE185	Hord silt loam, terrace, 1 to 3 percent slopes	0.000	0.000	0.000	0.000	0.000	0.069	0.000	0.000	0.000
Steele City	NE	York	780.127	780.258	0.131	NE185	Fillmore silt loam, 0 to 1 percent slopes	0.000	0.000	0.000	0.000	0.131	0.131	0.000	0.000	0.000
Steele City	NE	York	780.258	780.331	0.073	NE185	Scott silt loam, 0 to 1 percent slopes	0.000	0.000	0.000	0.000	0.073	0.073	0.000	0.000	0.000
Steele City	NE	York	780.331	780.362	0.031	NE185	Fillmore silt loam, 0 to 1 percent slopes	0.000	0.000	0.000	0.000	0.031	0.031	0.000	0.000	0.000
Steele City	NE	York	780.362	780.428	0.066	NE185	Hastings silt loam, 3 to 6 percent slopes	0.000	0.000	0.000	0.000	0.000	0.066	0.000	0.000	0.000
Steele City	NE	York	780.428	780.555	0.128	NE185	Hastings silt loam, 0 to 1 percent slopes	0.000	0.000	0.000	0.000	0.003	0.128	0.000	0.000	0.000
Steele City	NE	York	780.555	780.584	0.029	NE185	Fillmore silt loam, 0 to 1 percent slopes	0.000	0.000	0.000	0.000	0.029	0.029	0.000	0.000	0.000
Steele City	NE	York	780.584	780.609	0.024	NE185	Hord silt loam, terrace, 0 to 1 percent slopes	0.000	0.000	0.000	0.000	0.000	0.024	0.000	0.000	0.000
Steele City	NE	York	780.609	780.704	0.096	NE185	Hastings silt loam, 1 to 3 percent slopes	0.000	0.000	0.000	0.000	0.002	0.096	0.000	0.000	0.000
Steele City	NE	York	780.704	780.732	0.028	NE185	Hastings silt loam, 0 to 1 percent slopes	0.000	0.000	0.000	0.000	0.001	0.028	0.000	0.000	0.000

Appendix K – Soils by Milepost – Steele City Segment

Pipeline Segment	State	County	Beginning Milepost	Ending Milepost	Miles	Soil Series	Soil Series Name	Wind (miles)	Water (miles)	Low revegetation on Potential (miles)	Prime Farmland (miles)	Hydric Soils (miles)	Compaction on Prone (miles)	Stoney – Rocky (miles)	Shallow Bedrock (miles)	Droghty (miles)
Steele City	NE	York	780.732	780.779	0.046	NE185	Fillmore silt loam, drained, 0 to 1 percent slopes	0.000	0.000	0.000	0.000	0.002	0.046	0.000	0.000	0.000
Steele City	NE	York	780.779	780.794	0.015	NE185	Hastings silt loam, 0 to 1 percent slopes	0.000	0.000	0.000	0.000	0.000	0.015	0.000	0.000	0.000
Steele City	NE	York	780.794	780.883	0.089	NE185	Hastings silt loam, 1 to 3 percent slopes	0.000	0.000	0.000	0.000	0.002	0.089	0.000	0.000	0.000
Steele City	NE	York	780.883	780.954	0.071	NE185	Fillmore silt loam, 0 to 1 percent slopes	0.000	0.000	0.000	0.000	0.071	0.071	0.000	0.000	0.000
Steele City	NE	York	780.954	781.012	0.059	NE185	Hastings silt loam, 0 to 1 percent slopes	0.000	0.000	0.000	0.000	0.001	0.059	0.000	0.000	0.000
Steele City	NE	York	781.012	781.036	0.023	NE185	Fillmore silt loam, drained, 0 to 1 percent slopes	0.000	0.000	0.000	0.000	0.001	0.023	0.000	0.000	0.000
Steele City	NE	York	781.036	781.097	0.062	NE185	Fillmore silt loam, 0 to 1 percent slopes	0.000	0.000	0.000	0.000	0.062	0.062	0.000	0.000	0.000
Steele City	NE	York	781.097	781.128	0.031	NE185	Fillmore silt loam, drained, 0 to 1 percent slopes	0.000	0.000	0.000	0.000	0.002	0.031	0.000	0.000	0.000
Steele City	NE	York	781.128	781.199	0.071	NE185	Crete silt loam, 0 to 1 percent slopes	0.000	0.000	0.000	0.000	0.001	0.071	0.000	0.000	0.000
Steele City	NE	York	781.199	781.285	0.086	NE185	Hastings silt loam, 0 to 1 percent slopes	0.000	0.000	0.000	0.000	0.002	0.086	0.000	0.000	0.000
Steele City	NE	York	781.285	781.461	0.176	NE185	Hastings silt loam, 3 to 6 percent slopes	0.000	0.000	0.000	0.000	0.000	0.176	0.000	0.000	0.000
Steele City	NE	York	781.461	781.501	0.040	NE185	Hastings silt loam, 1 to 3 percent slopes	0.000	0.000	0.000	0.000	0.001	0.040	0.000	0.000	0.000
Steele City	NE	York	781.501	781.895	0.394	NE185	Hastings silt loam, 0 to 1 percent slopes	0.000	0.000	0.000	0.000	0.008	0.394	0.000	0.000	0.000
Steele City	NE	York	781.895	782.002	0.107	NE185	Fillmore silt loam, drained, 0 to 1 percent slopes	0.000	0.000	0.000	0.000	0.005	0.107	0.000	0.000	0.000
Steele City	NE	York	782.002	782.766	0.764	NE185	Hastings silt loam, 0 to 1 percent slopes	0.000	0.000	0.000	0.000	0.015	0.764	0.000	0.000	0.000
Steele City	NE	York	782.766	782.854	0.088	NE185	Hastings silty clay loam, 3 to 6 percent slopes, eroded	0.000	0.000	0.000	0.000	0.000	0.088	0.000	0.000	0.000
Steele City	NE	York	782.854	782.895	0.041	NE185	Hastings silt loam, 0 to 1 percent slopes	0.000	0.000	0.000	0.000	0.001	0.041	0.000	0.000	0.000
Steele City	NE	York	782.895	782.971	0.076	NE185	Hastings silty clay loam, 3 to 6 percent slopes, eroded	0.000	0.000	0.000	0.000	0.000	0.076	0.000	0.000	0.000
Steele City	NE	York	782.971	783.621	0.650	NE185	Hastings silt loam, 0 to 1 percent slopes	0.000	0.000	0.000	0.000	0.013	0.650	0.000	0.000	0.000
Steele City	NE	York	783.621	783.698	0.077	NE185	Fillmore silt loam, drained, 0 to 1 percent slopes	0.000	0.000	0.000	0.000	0.004	0.077	0.000	0.000	0.000
Steele City	NE	York	783.698	784.274	0.575	NE185	Hastings silt loam, 0 to 1 percent slopes	0.000	0.000	0.000	0.000	0.012	0.575	0.000	0.000	0.000
Steele City	NE	York	784.274	784.314	0.040	NE185	Hastings silty clay loam, 3 to 6 percent slopes, eroded	0.000	0.000	0.000	0.000	0.000	0.040	0.000	0.000	0.000
Steele City	NE	York	784.314	784.375	0.061	NE185	Uly-Hobbs silt loams, 11 to 30 percent slopes	0.000	0.033	0.000	0.000	0.000	0.061	0.000	0.000	0.000
Steele City	NE	York	784.375	784.399	0.024	NE185	Hastings silty clay loam, 3 to 6 percent slopes, eroded	0.000	0.000	0.000	0.000	0.000	0.024	0.000	0.000	0.000
Steele City	NE	York	784.399	784.450	0.051	NE185	Uly-Hobbs silt loams, 11 to 30 percent slopes	0.000	0.028	0.000	0.000	0.000	0.051	0.000	0.000	0.000
Steele City	NE	York	784.450	784.592	0.142	NE185	Hastings silty clay loam, 3 to 6 percent slopes, eroded	0.000	0.000	0.000	0.000	0.000	0.142	0.000	0.000	0.000
Steele City	NE	York	784.592	784.624	0.032	NE185	Hastings silt loam, 1 to 3 percent slopes	0.000	0.000	0.000	0.000	0.001	0.032	0.000	0.000	0.000
Steele City	NE	York	784.624	784.706	0.082	NE185	Hastings silt loam, 0 to 1 percent slopes	0.000	0.000	0.000	0.000	0.002	0.082	0.000	0.000	0.000
Steele City	NE	York	784.706	784.765	0.059	NE185	Hastings silt loam, 1 to 3 percent slopes	0.000	0.000	0.000	0.000	0.001	0.059	0.000	0.000	0.000
Steele City	NE	York	784.765	785.061	0.296	NE185	Hastings silt loam, 0 to 1 percent slopes	0.000	0.000	0.000	0.000	0.006	0.296	0.000	0.000	0.000
Steele City	NE	York	785.061	785.141	0.080	NE185	Hastings silty clay loam, 3 to 6 percent slopes, eroded	0.000	0.000	0.000	0.000	0.000	0.080	0.000	0.000	0.000
Steele City	NE	York	785.141	785.191	0.050	NE185	Uly-Hobbs silt loams, 11 to 30 percent slopes	0.000	0.027	0.000	0.000	0.000	0.050	0.000	0.000	0.000
Steele City	NE	York	785.191	785.335	0.144	NE185	Geary-Hobbs silt loams, 11 to 30 percent slopes	0.000	0.072	0.000	0.000	0.000	0.144	0.000	0.000	0.000
Steele City	NE	York	785.335	785.473	0.139	NE185	Hastings silty clay loam, 3 to 6 percent slopes, eroded	0.000	0.000	0.000	0.000	0.000	0.139	0.000	0.000	0.000
Steele City	NE	York	785.473	785.605	0.132	NE185	Geary-Hobbs silt loams, 11 to 30 percent slopes	0.000	0.066	0.000	0.000	0.000	0.132	0.000	0.000	0.000
Steele City	NE	York	785.605	785.612	0.007	NE185	Hastings silty clay loam, 3 to 6 percent slopes, eroded	0.000	0.000	0.000	0.000	0.000	0.007	0.000	0.000	0.000
Steele City	NE	York	785.612	785.682	0.070	NE185	Geary-Hobbs silt loams, 11 to 30 percent slopes	0.000	0.035	0.000	0.000	0.000	0.070	0.000	0.000	0.000

Appendix K – Soils by Milepost – Steele City Segment

Pipeline Segment	State	County	Beginning Milepost	Ending Milepost	Miles	Soil Series	Soil Series Name	Wind (miles)	Water (miles)	Low revegetation on Potential (miles)	Prime Farmland (miles)	Hydric Soils (miles)	Compaction on Prone (miles)	Stoney – Rocky (miles)	Shallow Bedrock (miles)	Droghty (miles)
Steele City	NE	York	785.682	785.719	0.037	NE185	Hastings silty clay loam, 3 to 6 percent slopes, eroded	0.000	0.000	0.000	0.000	0.000	0.037	0.000	0.000	0.000
Steele City	NE	York	785.719	785.875	0.156	NE185	Hastings silt loam, 0 to 1 percent slopes	0.000	0.000	0.000	0.000	0.003	0.156	0.000	0.000	0.000
Steele City	NE	York	785.875	785.927	0.052	NE185	Geary-Hobbs silt loams, 11 to 30 percent slopes	0.000	0.026	0.000	0.000	0.000	0.052	0.000	0.000	0.000
Steele City	NE	York	785.927	786.181	0.254	NE185	Hastings silt loam, 0 to 1 percent slopes	0.000	0.000	0.000	0.000	0.005	0.254	0.000	0.000	0.000
Steele City	NE	York	786.181	786.203	0.023	NE185	Hastings silt loam, 3 to 6 percent slopes	0.000	0.000	0.000	0.000	0.000	0.023	0.000	0.000	0.000
Steele City	NE	York	786.203	786.425	0.221	NE185	Geary-Hobbs silt loams, 11 to 30 percent slopes	0.000	0.111	0.000	0.000	0.000	0.221	0.000	0.000	0.000
Steele City	NE	York	786.425	786.489	0.065	NE185	Hastings silty clay loam, 6 to 11 percent slopes, eroded	0.000	0.065	0.000	0.000	0.000	0.065	0.000	0.000	0.000
Steele City	NE	York	786.489	786.511	0.022	NE185	Hastings silty clay loam, 3 to 6 percent slopes, eroded	0.000	0.000	0.000	0.000	0.000	0.022	0.000	0.000	0.000
Steele City	NE	York	786.511	786.654	0.143	NE185	Hastings silt loam, 0 to 1 percent slopes	0.000	0.000	0.000	0.000	0.003	0.143	0.000	0.000	0.000
Steele City	NE	York	786.654	786.723	0.069	NE185	Hastings silty clay loam, 3 to 6 percent slopes, eroded	0.000	0.000	0.000	0.000	0.000	0.069	0.000	0.000	0.000
Steele City	NE	York	786.723	786.748	0.025	NE185	Geary-Hobbs silt loams, 11 to 30 percent slopes	0.000	0.012	0.000	0.000	0.000	0.025	0.000	0.000	0.000
Steele City	NE	York	786.748	786.829	0.081	NE185	Hastings silty clay loam, 3 to 6 percent slopes, eroded	0.000	0.000	0.000	0.000	0.000	0.081	0.000	0.000	0.000
Steele City	NE	York	786.829	786.893	0.064	NE185	Geary-Hobbs silt loams, 11 to 30 percent slopes	0.000	0.032	0.000	0.000	0.000	0.064	0.000	0.000	0.000
Steele City	NE	York	786.893	786.907	0.014	NE185	Hastings silty clay loam, 3 to 6 percent slopes, eroded	0.000	0.000	0.000	0.000	0.000	0.014	0.000	0.000	0.000
Steele City	NE	York	786.907	787.311	0.404	NE185	Geary-Hobbs silt loams, 11 to 30 percent slopes	0.000	0.202	0.000	0.000	0.000	0.404	0.000	0.000	0.000
Steele City	NE	York	787.311	787.513	0.202	NE185	Geary silty clay loam, 3 to 6 percent slopes, eroded	0.000	0.000	0.000	0.000	0.000	0.202	0.000	0.000	0.000
Steele City	NE	York	787.513	787.657	0.144	NE185	Hord silt loam, terrace, 1 to 3 percent slopes	0.000	0.000	0.000	0.000	0.000	0.144	0.000	0.000	0.000
Steele City	NE	York	787.657	787.774	0.117	NE185	Hord silt loam, terrace, 0 to 1 percent slopes	0.000	0.000	0.000	0.000	0.000	0.117	0.000	0.000	0.000
Steele City	NE	York	787.774	787.828	0.054	NE185	Hobbs silt loam, 0 to 2 percent slopes	0.000	0.000	0.000	0.000	0.000	0.054	0.000	0.000	0.000
Steele City	NE	York	787.828	787.846	0.018	NE185	Silty alluvial land	0.000	0.000	0.000	0.000	0.000	0.018	0.000	0.000	0.000
Steele City	NE	York	787.846	787.861	0.016	NE185	Water	0.000	0.000	0.000	0.000	0.000	0.016	0.000	0.000	0.000
Steele City	NE	York	787.861	787.933	0.072	NE185	Silty alluvial land	0.000	0.000	0.000	0.000	0.001	0.072	0.000	0.000	0.000
Steele City	NE	York	787.933	787.993	0.060	NE185	Hobbs silt loam, 0 to 2 percent slopes	0.000	0.000	0.000	0.000	0.000	0.060	0.000	0.000	0.000
Steele City	NE	York	787.993	788.080	0.087	NE185	Hord silt loam, terrace, 0 to 1 percent slopes	0.000	0.000	0.000	0.000	0.000	0.087	0.000	0.000	0.000
Steele City	NE	York	788.080	788.175	0.095	NE185	Hastings silty clay loam, 3 to 6 percent slopes, eroded	0.000	0.000	0.000	0.000	0.000	0.095	0.000	0.000	0.000
Steele City	NE	York	788.175	788.287	0.112	NE185	Hord silt loam, terrace, 0 to 1 percent slopes	0.000	0.000	0.000	0.000	0.000	0.112	0.000	0.000	0.000
Steele City	NE	York	788.287	788.342	0.055	NE185	Hastings silty clay loam, 3 to 6 percent slopes, eroded	0.000	0.000	0.000	0.000	0.000	0.055	0.000	0.000	0.000
Steele City	NE	York	788.342	788.511	0.169	NE185	Crete silt loam, 0 to 1 percent slopes	0.000	0.000	0.000	0.000	0.003	0.169	0.000	0.000	0.000
Steele City	NE	York	788.511	788.591	0.079	NE185	Butler silt loam, 0 to 1 percent slopes	0.000	0.000	0.000	0.000	0.004	0.079	0.000	0.000	0.000
Steele City	NE	York	788.591	788.690	0.099	NE185	Crete silt loam, 0 to 1 percent slopes	0.000	0.000	0.000	0.000	0.002	0.099	0.000	0.000	0.000
Steele City	NE	York	788.690	788.739	0.049	NE185	Butler silt loam, 0 to 1 percent slopes	0.000	0.000	0.000	0.000	0.002	0.049	0.000	0.000	0.000
Steele City	NE	York	788.739	788.796	0.057	NE185	Hastings silt loam, 0 to 1 percent slopes	0.000	0.000	0.000	0.000	0.001	0.057	0.000	0.000	0.000
Steele City	NE	York	788.796	788.831	0.035	NE185	Hastings silt loam, 1 to 3 percent slopes	0.000	0.000	0.000	0.000	0.001	0.035	0.000	0.000	0.000
Steele City	NE	York	788.831	788.929	0.098	NE185	Hastings silt loam, 0 to 1 percent slopes	0.000	0.000	0.000	0.000	0.002	0.098	0.000	0.000	0.000
Steele City	NE	York	788.929	789.047	0.118	NE185	Butler silt loam, 0 to 1 percent slopes	0.000	0.000	0.000	0.000	0.006	0.118	0.000	0.000	0.000
Steele City	NE	York	789.047	789.056	0.009	NE185	Hastings silt loam, 0 to 1 percent slopes	0.000	0.000	0.000	0.000	0.000	0.009	0.000	0.000	0.000
Steele City	NE	York	789.056	789.181	0.125	NE185	Hord silt loam, terrace, 1 to 3 percent slopes	0.000	0.000	0.000	0.000	0.000	0.125	0.000	0.000	0.000

Appendix K – Soils by Milepost – Steele City Segment

Pipeline Segment	State	County	Beginning Milepost	Ending Milepost	Miles	Soil Series	Soil Series Name	Wind (miles)	Water (miles)	Low revegetation on Potential (miles)	Prime Farmland (miles)	Hydric Soils (miles)	Compaction on Prone (miles)	Stoney – Rocky (miles)	Shallow Bedrock (miles)	Droghty (miles)
Steele City	NE	York	789.181	789.359	0.179	NE185	Hastings silty clay loam, 3 to 6 percent slopes, eroded	0.000	0.000	0.000	0.000	0.000	0.179	0.000	0.000	0.000
Steele City	NE	York	789.359	789.563	0.204	NE185	Hastings silt loam, 0 to 1 percent slopes	0.000	0.000	0.000	0.000	0.004	0.204	0.000	0.000	0.000
Steele City	NE	York	789.563	789.697	0.134	NE185	Hastings silty clay loam, 6 to 11 percent slopes, eroded	0.000	0.134	0.000	0.000	0.000	0.134	0.000	0.000	0.000
Steele City	NE	York	789.697	789.749	0.052	NE185	Hastings silty clay loam, 3 to 6 percent slopes, eroded	0.000	0.000	0.000	0.000	0.000	0.052	0.000	0.000	0.000
Steele City	NE	York	789.749	789.938	0.189	NE185	Hastings silty clay loam, 6 to 11 percent slopes, eroded	0.000	0.189	0.000	0.000	0.000	0.189	0.000	0.000	0.000
Steele City	NE	York	789.938	790.274	0.336	NE185	Hastings silty clay loam, 3 to 6 percent slopes, eroded	0.000	0.000	0.000	0.000	0.000	0.336	0.000	0.000	0.000
Steele City	NE	York	790.274	790.357	0.083	NE185	Hastings silt loam, 3 to 6 percent slopes	0.000	0.000	0.000	0.000	0.000	0.083	0.000	0.000	0.000
Steele City	NE	York	790.357	790.565	0.208	NE185	Hastings silt loam, 1 to 3 percent slopes	0.000	0.000	0.000	0.000	0.004	0.208	0.000	0.000	0.000
Steele City	NE	York	790.565	790.844	0.279	NE185	Hastings silt loam, 3 to 6 percent slopes	0.000	0.000	0.000	0.000	0.000	0.279	0.000	0.000	0.000
Steele City	NE	York	790.844	790.944	0.100	NE185	Hastings silt loam, 1 to 3 percent slopes	0.000	0.000	0.000	0.000	0.002	0.100	0.000	0.000	0.000
Steele City	NE	York	790.944	790.975	0.031	NE185	Hastings silt loam, 3 to 6 percent slopes	0.000	0.000	0.000	0.000	0.000	0.031	0.000	0.000	0.000
Steele City	NE	York	790.975	791.078	0.103	NE185	Hastings silt loam, 1 to 3 percent slopes	0.000	0.000	0.000	0.000	0.002	0.103	0.000	0.000	0.000
Steele City	NE	York	791.078	791.134	0.056	NE185	Hastings silt loam, 3 to 6 percent slopes	0.000	0.000	0.000	0.000	0.000	0.056	0.000	0.000	0.000
Steele City	NE	York	791.134	791.333	0.199	NE185	Butler silt loam, 0 to 1 percent slopes	0.000	0.000	0.000	0.000	0.010	0.199	0.000	0.000	0.000
Steele City	NE	York	791.333	791.469	0.136	NE185	Hastings silty clay loam, 3 to 6 percent slopes, eroded	0.000	0.000	0.000	0.000	0.000	0.136	0.000	0.000	0.000
Steele City	NE	York	791.469	791.563	0.094	NE185	Fillmore silt loam, drained, 0 to 1 percent slopes	0.000	0.000	0.000	0.000	0.005	0.094	0.000	0.000	0.000
Steele City	NE	York	791.563	791.795	0.233	NE185	Hastings silt loam, 1 to 3 percent slopes	0.000	0.000	0.000	0.000	0.005	0.233	0.000	0.000	0.000
Steele City	NE	York	791.795	792.132	0.337	NE185	Hastings silt loam, 3 to 6 percent slopes	0.000	0.000	0.000	0.000	0.000	0.337	0.000	0.000	0.000
Steele City	NE	York	792.132	792.153	0.021	NE185	Hastings silt loam, 1 to 3 percent slopes	0.000	0.000	0.000	0.000	0.000	0.021	0.000	0.000	0.000
Steele City	NE	York	792.153	792.213	0.060	NE185	Butler silt loam, 0 to 1 percent slopes	0.000	0.000	0.000	0.000	0.003	0.060	0.000	0.000	0.000
Steele City	NE	York	792.213	792.250	0.037	NE185	Hastings silt loam, 1 to 3 percent slopes	0.000	0.000	0.000	0.000	0.001	0.037	0.000	0.000	0.000
Steele City	NE	York	792.250	792.525	0.275	NE185	Hastings silt loam, 3 to 6 percent slopes	0.000	0.000	0.000	0.000	0.000	0.275	0.000	0.000	0.000
Steele City	NE	York	792.525	792.562	0.037	NE185	Hord silt loam, terrace, 1 to 3 percent slopes	0.000	0.000	0.000	0.000	0.000	0.037	0.000	0.000	0.000
Steele City	NE	York	792.562	792.690	0.129	NE185	Hastings silt loam, 3 to 6 percent slopes	0.000	0.000	0.000	0.000	0.000	0.129	0.000	0.000	0.000
Steele City	NE	York	792.690	792.761	0.071	NE185	Hastings silt loam, 1 to 3 percent slopes	0.000	0.000	0.000	0.000	0.001	0.071	0.000	0.000	0.000
Steele City	NE	York	792.761	792.909	0.148	NE185	Butler silt loam, 0 to 1 percent slopes	0.000	0.000	0.000	0.000	0.007	0.148	0.000	0.000	0.000
Steele City	NE	York	792.909	792.940	0.031	NE185	Hastings silt loam, 3 to 6 percent slopes	0.000	0.000	0.000	0.000	0.000	0.031	0.000	0.000	0.000
Steele City	NE	York	792.940	793.001	0.062	NE185	Hastings silt loam, 1 to 3 percent slopes	0.000	0.000	0.000	0.000	0.001	0.062	0.000	0.000	0.000
Steele City	NE	Filmore	793.001	793.011	0.010	NE059	Hastings silt loam, 1 to 3 percent slopes	0.000	0.000	0.000	0.000	0.000	0.010	0.000	0.000	0.000
Steele City	NE	Filmore	793.011	793.077	0.066	NE059	Fillmore silt loam, 0 to 1 percent slopes	0.000	0.000	0.000	0.000	0.066	0.066	0.000	0.000	0.000
Steele City	NE	Filmore	793.077	793.421	0.344	NE059	Hastings silt loam, 3 to 6 percent slopes	0.000	0.000	0.000	0.000	0.000	0.344	0.000	0.000	0.000
Steele City	NE	Filmore	793.421	793.510	0.089	NE059	Hastings silty clay loam, 3 to 6 percent slopes, eroded	0.000	0.000	0.000	0.000	0.000	0.089	0.000	0.000	0.000
Steele City	NE	Filmore	793.510	793.615	0.105	NE059	Hobbs silt loam, 0 to 2 percent slopes	0.000	0.000	0.000	0.000	0.005	0.104	0.000	0.000	0.000
Steele City	NE	Filmore	793.615	793.675	0.061	NE059	Hastings silty clay loam, 6 to 11 percent slopes, eroded	0.000	0.061	0.000	0.000	0.000	0.061	0.000	0.000	0.000
Steele City	NE	Filmore	793.675	793.683	0.008	NE059	Hastings silt loam, 1 to 3 percent slopes	0.000	0.000	0.000	0.000	0.000	0.008	0.000	0.000	0.000
Steele City	NE	Filmore	793.683	793.888	0.204	NE059	Hastings silty clay loam, 3 to 6 percent slopes, eroded	0.000	0.000	0.000	0.000	0.000	0.204	0.000	0.000	0.000

Appendix K – Soils by Milepost – Steele City Segment

Pipeline Segment	State	County	Beginning Milepost	Ending Milepost	Miles	Soil Series	Soil Series Name	Wind (miles)	Water (miles)	Low revegetation on Potential (miles)	Prime Farmland (miles)	Hydric Soils (miles)	Compaction on Prone (miles)	Stoney – Rocky (miles)	Shallow Bedrock (miles)	Droghty (miles)
Steele City	NE	Filmore	793.888	793.926	0.038	NE059	Hastings silt loam, 1 to 3 percent slopes	0.000	0.000	0.000	0.000	0.001	0.038	0.000	0.000	0.000
Steele City	NE	Filmore	793.926	794.067	0.141	NE059	Crete silt loam, 0 to 1 percent slopes	0.000	0.000	0.003	0.000	0.007	0.141	0.000	0.000	0.000
Steele City	NE	Filmore	794.067	794.404	0.338	NE059	Butler silt loam, 0 to 1 percent slopes	0.000	0.000	0.007	0.000	0.017	0.338	0.000	0.000	0.000
Steele City	NE	Filmore	794.404	794.488	0.084	NE059	Crete silt loam, 0 to 1 percent slopes	0.000	0.000	0.002	0.000	0.004	0.084	0.000	0.000	0.000
Steele City	NE	Filmore	794.488	794.632	0.143	NE059	Hastings silty clay loam, 3 to 6 percent slopes, eroded	0.000	0.000	0.000	0.000	0.000	0.143	0.000	0.000	0.000
Steele City	NE	Filmore	794.632	794.812	0.180	NE059	Hastings silt loam, 1 to 3 percent slopes	0.000	0.000	0.000	0.000	0.004	0.180	0.000	0.000	0.000
Steele City	NE	Filmore	794.812	794.939	0.128	NE059	Crete silt loam, 0 to 1 percent slopes	0.000	0.000	0.003	0.000	0.006	0.128	0.000	0.000	0.000
Steele City	NE	Filmore	794.939	795.026	0.087	NE059	Butler silt loam, 0 to 1 percent slopes	0.000	0.000	0.002	0.000	0.004	0.087	0.000	0.000	0.000
Steele City	NE	Filmore	795.026	795.265	0.239	NE059	Crete silt loam, 0 to 1 percent slopes	0.000	0.000	0.005	0.000	0.012	0.239	0.000	0.000	0.000
Steele City	NE	Filmore	795.265	795.410	0.146	NE059	Butler silt loam, 0 to 1 percent slopes	0.000	0.000	0.003	0.000	0.007	0.146	0.000	0.000	0.000
Steele City	NE	Filmore	795.410	795.453	0.043	NE059	Crete silt loam, 0 to 1 percent slopes	0.000	0.000	0.001	0.000	0.002	0.043	0.000	0.000	0.000
Steele City	NE	Filmore	795.453	795.526	0.073	NE059	Butler silt loam, 0 to 1 percent slopes	0.000	0.000	0.001	0.000	0.004	0.073	0.000	0.000	0.000
Steele City	NE	Filmore	795.526	795.873	0.347	NE059	Crete silt loam, 0 to 1 percent slopes	0.000	0.000	0.007	0.000	0.017	0.347	0.000	0.000	0.000
Steele City	NE	Filmore	795.873	795.932	0.059	NE059	Hastings silt loam, 1 to 3 percent slopes	0.000	0.000	0.000	0.000	0.001	0.059	0.000	0.000	0.000
Steele City	NE	Filmore	795.932	796.005	0.074	NE059	Crete silt loam, 0 to 1 percent slopes	0.000	0.000	0.001	0.000	0.004	0.074	0.000	0.000	0.000
Steele City	NE	Filmore	796.005	796.054	0.048	NE059	Hastings silty clay loam, 3 to 6 percent slopes, eroded	0.000	0.000	0.000	0.000	0.000	0.048	0.000	0.000	0.000
Steele City	NE	Filmore	796.054	796.208	0.154	NE059	Hastings silt loam, 1 to 3 percent slopes	0.000	0.000	0.000	0.000	0.003	0.154	0.000	0.000	0.000
Steele City	NE	Filmore	796.208	796.212	0.004	NE059	Fillmore silt loam, drained, 0 to 1 percent slopes	0.000	0.000	0.000	0.000	0.004	0.004	0.000	0.000	0.000
Steele City	NE	Filmore	796.212	796.297	0.085	NE059	Hastings silt loam, 1 to 3 percent slopes	0.000	0.000	0.000	0.000	0.002	0.085	0.000	0.000	0.000
Steele City	NE	Filmore	796.297	796.357	0.060	NE059	Crete silt loam, 0 to 1 percent slopes	0.000	0.000	0.001	0.000	0.003	0.060	0.000	0.000	0.000
Steele City	NE	Filmore	796.357	796.545	0.188	NE059	Butler silt loam, 0 to 1 percent slopes	0.000	0.000	0.004	0.000	0.009	0.188	0.000	0.000	0.000
Steele City	NE	Filmore	796.545	796.633	0.088	NE059	Fillmore silt loam, 0 to 1 percent slopes	0.000	0.000	0.000	0.000	0.088	0.088	0.000	0.000	0.000
Steele City	NE	Filmore	796.633	796.694	0.061	NE059	Butler silt loam, 0 to 1 percent slopes	0.000	0.000	0.001	0.061	0.003	0.061	0.000	0.000	0.000
Steele City	NE	Filmore	796.694	796.917	0.223	NE059	Crete silt loam, 0 to 1 percent slopes	0.000	0.000	0.004	0.223	0.011	0.223	0.000	0.000	0.000
Steele City	NE	Filmore	796.917	797.001	0.085	NE059	Fillmore silt loam, 0 to 1 percent slopes	0.000	0.000	0.000	0.000	0.085	0.085	0.000	0.000	0.000
Steele City	NE	Filmore	797.001	797.040	0.039	NE059	Crete silt loam, 1 to 3 percent slopes	0.000	0.000	0.000	0.039	0.001	0.039	0.000	0.000	0.000
Steele City	NE	Filmore	797.040	797.389	0.349	NE059	Crete silt loam, 0 to 1 percent slopes	0.000	0.000	0.007	0.349	0.017	0.349	0.000	0.000	0.000
Steele City	NE	Filmore	797.389	797.671	0.283	NE059	Butler silt loam, 0 to 1 percent slopes	0.000	0.000	0.006	0.283	0.014	0.283	0.000	0.000	0.000
Steele City	NE	Filmore	797.671	797.837	0.165	NE059	Crete silt loam, 0 to 1 percent slopes	0.000	0.000	0.003	0.165	0.008	0.165	0.000	0.000	0.000
Steele City	NE	Filmore	797.837	798.046	0.209	NE059	Butler silt loam, 0 to 1 percent slopes	0.000	0.000	0.004	0.209	0.010	0.209	0.000	0.000	0.000
Steele City	NE	Filmore	798.046	798.182	0.136	NE059	Olbut-Butler silt loams, 0 to 1 percent slopes	0.000	0.000	0.075	0.000	0.088	0.136	0.000	0.000	0.000
Steele City	NE	Filmore	798.182	798.226	0.044	NE059	Fillmore silt loam, 0 to 1 percent slopes	0.000	0.000	0.000	0.000	0.044	0.044	0.000	0.000	0.000
Steele City	NE	Filmore	798.226	798.302	0.076	NE059	Crete silt loam, 0 to 1 percent slopes	0.000	0.000	0.002	0.076	0.004	0.076	0.000	0.000	0.000
Steele City	NE	Filmore	798.302	798.329	0.027	NE059	Fillmore silt loam, 0 to 1 percent slopes	0.000	0.000	0.000	0.000	0.027	0.027	0.000	0.000	0.000
Steele City	NE	Filmore	798.329	798.381	0.052	NE059	Scott silt loam, 0 to 1 percent slopes	0.000	0.000	0.000	0.000	0.052	0.052	0.000	0.000	0.000
Steele City	NE	Filmore	798.381	798.404	0.023	NE059	Fillmore silt loam, 0 to 1 percent slopes	0.000	0.000	0.000	0.000	0.023	0.023	0.000	0.000	0.000
Steele City	NE	Filmore	798.404	798.501	0.097	NE059	Olbut-Butler silt loams, 0 to 1 percent slopes	0.000	0.000	0.054	0.000	0.063	0.097	0.000	0.000	0.000
Steele City	NE	Filmore	798.501	798.564	0.063	NE059	Fillmore silt loam, drained, 0 to 1 percent slopes	0.000	0.000	0.000	0.063	0.063	0.063	0.000	0.000	0.000
Steele City	NE	Filmore	798.564	798.647	0.083	NE059	Olbut-Butler silt loams, 0 to 1 percent slopes	0.000	0.000	0.045	0.000	0.054	0.083	0.000	0.000	0.000
Steele City	NE	Filmore	798.647	798.746	0.099	NE059	Crete silt loam, 0 to 1 percent slopes	0.000	0.000	0.002	0.099	0.005	0.099	0.000	0.000	0.000
Steele City	NE	Filmore	798.746	798.906	0.160	NE059	Olbut-Butler silt loams, 0 to 1 percent slopes	0.000	0.000	0.088	0.000	0.104	0.160	0.000	0.000	0.000
Steele City	NE	Filmore	798.906	798.953	0.047	NE059	Crete silt loam, 0 to 1 percent slopes	0.000	0.000	0.001	0.047	0.002	0.047	0.000	0.000	0.000
Steele City	NE	Filmore	798.953	799.876	0.924	NE059	Olbut-Butler silt loams, 0 to 1 percent slopes	0.000	0.000	0.508	0.000	0.601	0.924	0.000	0.000	0.000

Appendix K – Soils by Milepost – Steele City Segment

Pipeline Segment	State	County	Beginning Milepost	Ending Milepost	Miles	Soil Series	Soil Series Name	Wind (miles)	Water (miles)	Low revegetation on Potential (miles)	Prime Farmland (miles)	Hydric Soils (miles)	Compaction on Prone (miles)	Stoney – Rocky (miles)	Shallow Bedrock (miles)	Droghty (miles)
Steele City	NE	Filmore	799.876	800.085	0.208	NE059	Scott silty clay loam, drained, 0 to 1 percent slopes	0.000	0.000	0.000	0.000	0.208	0.208	0.000	0.000	0.000
Steele City	NE	Filmore	800.085	800.197	0.112	NE059	Olbut-Butler silt loams, 0 to 1 percent slopes	0.000	0.000	0.062	0.000	0.073	0.112	0.000	0.000	0.000
Steele City	NE	Filmore	800.197	800.242	0.045	NE059	Crete silt loam, 0 to 1 percent slopes	0.000	0.000	0.001	0.045	0.002	0.045	0.000	0.000	0.000
Steele City	NE	Filmore	800.242	800.280	0.039	NE059	Scott silty clay loam, drained, 0 to 1 percent slopes	0.000	0.000	0.000	0.000	0.039	0.039	0.000	0.000	0.000
Steele City	NE	Filmore	800.280	800.390	0.109	NE059	Butler silt loam, 0 to 1 percent slopes	0.000	0.000	0.002	0.109	0.005	0.109	0.000	0.000	0.000
Steele City	NE	Filmore	800.390	800.457	0.067	NE059	Scott silty clay loam, drained, 0 to 1 percent slopes	0.000	0.000	0.000	0.000	0.067	0.067	0.000	0.000	0.000
Steele City	NE	Filmore	800.457	800.497	0.041	NE059	Fillmore silt loam, drained, 0 to 1 percent slopes	0.000	0.000	0.000	0.041	0.041	0.041	0.000	0.000	0.000
Steele City	NE	Filmore	800.497	800.586	0.088	NE059	Crete silt loam, 1 to 3 percent slopes	0.000	0.000	0.000	0.088	0.002	0.088	0.000	0.000	0.000
Steele City	NE	Filmore	800.586	800.934	0.348	NE059	Butler silt loam, 0 to 1 percent slopes	0.000	0.000	0.007	0.348	0.017	0.348	0.000	0.000	0.000
Steele City	NE	Filmore	800.934	801.022	0.089	NE059	Crete silty clay loam, 1 to 3 percent slopes	0.000	0.000	0.000	0.089	0.002	0.089	0.000	0.000	0.000
Steele City	NE	Filmore	801.022	801.118	0.096	NE059	Crete silt loam, 0 to 1 percent slopes	0.000	0.000	0.002	0.096	0.005	0.096	0.000	0.000	0.000
Steele City	NE	Filmore	801.118	801.230	0.112	NE059	Crete silty clay loam, 1 to 3 percent slopes	0.000	0.000	0.000	0.112	0.002	0.112	0.000	0.000	0.000
Steele City	NE	Filmore	801.230	801.404	0.174	NE059	Crete silt loam, 0 to 1 percent slopes	0.000	0.000	0.003	0.174	0.009	0.174	0.000	0.000	0.000
Steele City	NE	Filmore	801.404	801.456	0.052	NE059	Crete silty clay loam, 1 to 3 percent slopes	0.000	0.000	0.000	0.052	0.001	0.052	0.000	0.000	0.000
Steele City	NE	Filmore	801.456	801.529	0.073	NE059	Crete silt loam, 0 to 1 percent slopes	0.000	0.000	0.001	0.073	0.004	0.073	0.000	0.000	0.000
Steele City	NE	Filmore	801.529	801.595	0.066	NE059	Fillmore silt loam, drained, 0 to 1 percent slopes	0.000	0.000	0.000	0.066	0.066	0.066	0.000	0.000	0.000
Steele City	NE	Filmore	801.595	801.744	0.149	NE059	Crete silt loam, 0 to 1 percent slopes	0.000	0.000	0.003	0.149	0.007	0.149	0.000	0.000	0.000
Steele City	NE	Filmore	801.744	801.790	0.046	NE059	Crete silty clay loam, 1 to 3 percent slopes	0.000	0.000	0.000	0.046	0.001	0.046	0.000	0.000	0.000
Steele City	NE	Filmore	801.790	801.859	0.069	NE059	Crete silt loam, 0 to 1 percent slopes	0.000	0.000	0.001	0.069	0.003	0.069	0.000	0.000	0.000
Steele City	NE	Filmore	801.859	801.965	0.107	NE059	Fillmore silt loam, drained, 0 to 1 percent slopes	0.000	0.000	0.000	0.107	0.107	0.107	0.000	0.000	0.000
Steele City	NE	Filmore	801.965	802.076	0.111	NE059	Crete silt loam, 0 to 1 percent slopes	0.000	0.000	0.002	0.111	0.006	0.111	0.000	0.000	0.000
Steele City	NE	Filmore	802.076	802.138	0.062	NE059	Fillmore silt loam, 0 to 1 percent slopes	0.000	0.000	0.000	0.000	0.062	0.062	0.000	0.000	0.000
Steele City	NE	Filmore	802.138	802.171	0.033	NE059	Fillmore silt loam, drained, 0 to 1 percent slopes	0.000	0.000	0.000	0.033	0.033	0.033	0.000	0.000	0.000
Steele City	NE	Filmore	802.171	802.220	0.049	NE059	Crete silt loam, 0 to 1 percent slopes	0.000	0.000	0.001	0.049	0.002	0.049	0.000	0.000	0.000
Steele City	NE	Filmore	802.220	802.362	0.142	NE059	Fillmore silt loam, drained, 0 to 1 percent slopes	0.000	0.000	0.000	0.142	0.142	0.142	0.000	0.000	0.000
Steele City	NE	Filmore	802.362	802.616	0.255	NE059	Crete silt loam, 0 to 1 percent slopes	0.000	0.000	0.005	0.255	0.013	0.255	0.000	0.000	0.000
Steele City	NE	Filmore	802.616	802.660	0.044	NE059	Butler silt loam, 0 to 1 percent slopes	0.000	0.000	0.001	0.044	0.002	0.044	0.000	0.000	0.000
Steele City	NE	Filmore	802.660	802.741	0.081	NE059	Crete silt loam, 0 to 1 percent slopes	0.000	0.000	0.002	0.081	0.004	0.081	0.000	0.000	0.000
Steele City	NE	Filmore	802.741	802.837	0.096	NE059	Hastings silty clay loam, 3 to 6 percent slopes, eroded	0.000	0.000	0.000	0.096	0.000	0.096	0.000	0.000	0.000
Steele City	NE	Filmore	802.837	802.874	0.037	NE059	Crete silt loam, 0 to 1 percent slopes	0.000	0.000	0.001	0.037	0.002	0.037	0.000	0.000	0.000
Steele City	NE	Filmore	802.874	802.973	0.100	NE059	Hastings silty clay loam, 6 to 11 percent slopes, eroded	0.000	0.100	0.000	0.000	0.000	0.100	0.000	0.000	0.000
Steele City	NE	Filmore	802.973	803.000	0.027	NE059	Crete silt loam, 0 to 1 percent slopes	0.000	0.000	0.001	0.027	0.001	0.027	0.000	0.000	0.000
Steele City	NE	Filmore	803.000	803.061	0.061	NE059	Hastings silty clay loam, 6 to 11 percent slopes, eroded	0.000	0.061	0.000	0.000	0.000	0.061	0.000	0.000	0.000
Steele City	NE	Filmore	803.061	803.147	0.086	NE059	Crete silt loam, 0 to 1 percent slopes	0.000	0.000	0.002	0.086	0.004	0.086	0.000	0.000	0.000
Steele City	NE	Filmore	803.147	803.240	0.093	NE059	Hastings silty clay loam, 6 to 11 percent slopes, eroded	0.000	0.093	0.000	0.000	0.000	0.093	0.000	0.000	0.000
Steele City	NE	Filmore	803.240	803.250	0.010	NE059	Crete silt loam, 0 to 1 percent slopes	0.000	0.000	0.000	0.010	0.001	0.010	0.000	0.000	0.000
Steele City	NE	Filmore	803.250	803.294	0.044	NE059	Hastings silty clay loam, 6 to 11 percent slopes, eroded	0.000	0.044	0.000	0.000	0.000	0.044	0.000	0.000	0.000
Steele City	NE	Filmore	803.294	803.533	0.239	NE059	Crete silt loam, 0 to 1 percent slopes	0.000	0.000	0.005	0.239	0.012	0.239	0.000	0.000	0.000
Steele City	NE	Filmore	803.533	803.606	0.073	NE059	Hastings silty clay loam, 6 to 11 percent slopes, eroded	0.000	0.073	0.000	0.000	0.000	0.073	0.000	0.000	0.000

Appendix K – Soils by Milepost – Steele City Segment

Pipeline Segment	State	County	Beginning Milepost	Ending Milepost	Miles	Soil Series	Soil Series Name	Wind (miles)	Water (miles)	Low revegetation on Potential (miles)	Prime Farmland (miles)	Hydric Soils (miles)	Compaction on Prone (miles)	Stoney – Rocky (miles)	Shallow Bedrock (miles)	Droghty (miles)
Steele City	NE	Filmore	803.606	803.654	0.048	NE059	Hastings silty clay loam, 3 to 6 percent slopes, eroded	0.000	0.000	0.000	0.048	0.000	0.048	0.000	0.000	0.000
Steele City	NE	Filmore	803.654	803.845	0.191	NE059	Crete silt loam, 0 to 1 percent slopes	0.000	0.000	0.004	0.191	0.010	0.191	0.000	0.000	0.000
Steele City	NE	Filmore	803.845	803.936	0.091	NE059	Fillmore silt loam, drained, 0 to 1 percent slopes	0.000	0.000	0.000	0.091	0.091	0.091	0.000	0.000	0.000
Steele City	NE	Filmore	803.936	804.102	0.167	NE059	Crete silt loam, 0 to 1 percent slopes	0.000	0.000	0.003	0.167	0.008	0.167	0.000	0.000	0.000
Steele City	NE	Filmore	804.102	804.137	0.035	NE059	Crete silt loam, 1 to 3 percent slopes	0.000	0.000	0.000	0.035	0.001	0.035	0.000	0.000	0.000
Steele City	NE	Filmore	804.137	804.238	0.101	NE059	Crete silt loam, 0 to 1 percent slopes	0.000	0.000	0.002	0.101	0.005	0.101	0.000	0.000	0.000
Steele City	NE	Filmore	804.238	804.346	0.108	NE059	Crete silt loam, 1 to 3 percent slopes	0.000	0.000	0.000	0.108	0.002	0.108	0.000	0.000	0.000
Steele City	NE	Filmore	804.346	804.468	0.123	NE059	Crete silt loam, 0 to 1 percent slopes	0.000	0.000	0.002	0.123	0.006	0.123	0.000	0.000	0.000
Steele City	NE	Filmore	804.468	804.622	0.153	NE059	Hastings silty clay loam, 3 to 6 percent slopes, eroded	0.000	0.000	0.000	0.153	0.000	0.153	0.000	0.000	0.000
Steele City	NE	Filmore	804.622	804.778	0.157	NE059	Crete silt loam, 1 to 3 percent slopes	0.000	0.000	0.000	0.157	0.003	0.157	0.000	0.000	0.000
Steele City	NE	Filmore	804.778	804.859	0.080	NE059	Uly-Hobbs silt loams, 0 to 30 percent slopes	0.000	0.048	0.000	0.000	0.000	0.080	0.000	0.000	0.000
Steele City	NE	Filmore	804.859	804.946	0.087	NE059	Crete silt loam, 1 to 3 percent slopes	0.000	0.000	0.000	0.087	0.002	0.087	0.000	0.000	0.000
Steele City	NE	Filmore	804.946	805.162	0.216	NE059	Crete silt loam, 0 to 1 percent slopes	0.000	0.000	0.004	0.216	0.011	0.216	0.000	0.000	0.000
Steele City	NE	Filmore	805.162	805.176	0.014	NE059	Hastings silty clay loam, 3 to 6 percent slopes, eroded	0.000	0.000	0.000	0.014	0.000	0.014	0.000	0.000	0.000
Steele City	NE	Filmore	805.176	805.643	0.468	NE059	Crete silt loam, 0 to 1 percent slopes	0.000	0.000	0.009	0.468	0.023	0.468	0.000	0.000	0.000
Steele City	NE	Filmore	805.643	805.731	0.088	NE059	Hastings silty clay loam, 3 to 6 percent slopes, eroded	0.000	0.000	0.000	0.088	0.000	0.088	0.000	0.000	0.000
Steele City	NE	Filmore	805.731	805.797	0.067	NE059	Geary-Hobbs silt loams, 0 to 30 percent slopes	0.000	0.040	0.000	0.000	0.001	0.067	0.000	0.000	0.000
Steele City	NE	Filmore	805.797	805.891	0.094	NE059	Geary silty clay loam, 6 to 11 percent slopes, eroded	0.000	0.093	0.000	0.000	0.001	0.094	0.000	0.000	0.000
Steele City	NE	Filmore	805.891	806.012	0.121	NE059	Hobbs silt loam, channeled	0.000	0.000	0.000	0.000	0.006	0.121	0.000	0.000	0.000
Steele City	NE	Filmore	806.012	806.014	0.002	NE059	Geary silty clay loam, 6 to 11 percent slopes, eroded	0.000	0.002	0.000	0.000	0.000	0.002	0.000	0.000	0.000
Steele City	NE	Filmore	806.014	806.050	0.037	NE059	Geary silty clay loam, 3 to 6 percent slopes, eroded	0.000	0.000	0.000	0.037	0.000	0.037	0.000	0.000	0.000
Steele City	NE	Filmore	806.050	806.083	0.033	NE059	Geary silty clay loam, 6 to 11 percent slopes, eroded	0.000	0.032	0.000	0.000	0.000	0.033	0.000	0.000	0.000
Steele City	NE	Filmore	806.083	806.143	0.059	NE059	Hastings silty clay loam, 3 to 6 percent slopes, eroded	0.000	0.000	0.000	0.059	0.000	0.059	0.000	0.000	0.000
Steele City	NE	Filmore	806.143	806.295	0.152	NE059	Geary silty clay loam, 6 to 11 percent slopes, eroded	0.000	0.150	0.000	0.000	0.002	0.152	0.000	0.000	0.000
Steele City	NE	Filmore	806.295	806.362	0.067	NE059	Muir silt loam, 1 to 3 percent slopes	0.000	0.000	0.000	0.067	0.000	0.067	0.000	0.000	0.000
Steele City	NE	Filmore	806.362	806.572	0.210	NE059	Muir silt loam, 0 to 1 percent slopes	0.000	0.000	0.000	0.210	0.002	0.208	0.000	0.000	0.000
Steele City	NE	Filmore	806.572	806.710	0.138	NE059	Butler silt loam, 0 to 1 percent slopes	0.000	0.000	0.003	0.138	0.007	0.138	0.000	0.000	0.000
Steele City	NE	Filmore	806.710	806.886	0.175	NE059	Muir silt loam, 0 to 1 percent slopes	0.000	0.000	0.000	0.175	0.002	0.174	0.000	0.000	0.000
Steele City	NE	Filmore	806.886	806.925	0.040	NE059	Muir silt loam, 3 to 6 percent slopes	0.000	0.000	0.000	0.040	0.000	0.040	0.000	0.000	0.000
Steele City	NE	Filmore	806.925	806.965	0.039	NE059	Hobbs silt loam, 0 to 2 percent slopes	0.000	0.000	0.000	0.039	0.002	0.039	0.000	0.000	0.000
Steele City	NE	Filmore	806.965	807.078	0.113	NE059	Hobbs silt loam, channeled	0.000	0.000	0.000	0.000	0.006	0.113	0.000	0.000	0.000
Steele City	NE	Filmore	807.078	807.200	0.122	NE059	Muir silt loam, 0 to 1 percent slopes	0.000	0.000	0.000	0.122	0.001	0.121	0.000	0.000	0.000
Steele City	NE	Filmore	807.200	807.282	0.082	NE059	Geary silty clay loam, 6 to 11 percent slopes, eroded	0.000	0.081	0.000	0.000	0.001	0.082	0.000	0.000	0.000
Steele City	NE	Filmore	807.282	807.399	0.116	NE059	Geary-Hobbs silt loams, 0 to 30 percent slopes	0.000	0.070	0.000	0.000	0.002	0.116	0.000	0.000	0.000
Steele City	NE	Filmore	807.399	807.473	0.075	NE059	Hastings silty clay loam, 3 to 6 percent slopes, eroded	0.000	0.000	0.000	0.075	0.000	0.075	0.000	0.000	0.000
Steele City	NE	Filmore	807.473	807.629	0.156	NE059	Crete silt loam, 1 to 3 percent slopes	0.000	0.000	0.000	0.156	0.003	0.156	0.000	0.000	0.000
Steele City	NE	Filmore	807.629	807.660	0.031	NE059	Uly-Hobbs silt loams, 0 to 30 percent slopes	0.000	0.018	0.000	0.000	0.000	0.031	0.000	0.000	0.000
Steele City	NE	Filmore	807.660	807.711	0.051	NE059	Crete silt loam, 1 to 3 percent slopes	0.000	0.000	0.000	0.051	0.001	0.051	0.000	0.000	0.000
Steele City	NE	Saline	807.711	807.720	0.009	NE151	Crete silt loam, 1 to 3 percent slopes	0.000	0.000	0.000	0.009	0.000	0.009	0.000	0.000	0.000

Appendix K – Soils by Milepost – Steele City Segment

Pipeline Segment	State	County	Beginning Milepost	Ending Milepost	Miles	Soil Series	Soil Series Name	Wind (miles)	Water (miles)	Low revegetation on Potential (miles)	Prime Farmland (miles)	Hydric Soils (miles)	Compaction on Prone (miles)	Stoney – Rocky (miles)	Shallow Bedrock (miles)	Droghty (miles)
Steele City	NE	Saline	807.720	807.776	0.056	NE151	Hastings silty clay loam, 6 to 11 percent slopes, eroded	0.000	0.056	0.000	0.000	0.000	0.056	0.000	0.000	0.000
Steele City	NE	Saline	807.776	807.912	0.136	NE151	Crete silt loam, 1 to 3 percent slopes	0.000	0.000	0.000	0.136	0.000	0.136	0.000	0.000	0.000
Steele City	NE	Saline	807.912	807.955	0.042	NE151	Hastings silty clay loam, 6 to 11 percent slopes, eroded	0.000	0.042	0.000	0.000	0.000	0.042	0.000	0.000	0.000
Steele City	NE	Saline	807.955	808.014	0.059	NE151	Crete silt loam, 1 to 3 percent slopes	0.000	0.000	0.000	0.059	0.000	0.059	0.000	0.000	0.000
Steele City	NE	Saline	808.014	808.129	0.116	NE151	Hastings silty clay loam, 6 to 11 percent slopes, eroded	0.000	0.116	0.000	0.000	0.000	0.116	0.000	0.000	0.000
Steele City	NE	Saline	808.129	808.227	0.098	NE151	Crete silt loam, 1 to 3 percent slopes	0.000	0.000	0.000	0.098	0.000	0.098	0.000	0.000	0.000
Steele City	NE	Saline	808.227	808.448	0.221	NE151	Hastings silty clay loam, 3 to 6 percent slopes, eroded	0.000	0.000	0.000	0.221	0.000	0.221	0.000	0.000	0.000
Steele City	NE	Saline	808.448	808.577	0.129	NE151	Longford silty clay loam, 3 to 6 percent slopes, eroded	0.000	0.000	0.000	0.129	0.000	0.129	0.000	0.000	0.000
Steele City	NE	Saline	808.577	808.601	0.025	NE151	Hobbs silt loam, channeled	0.000	0.000	0.000	0.000	0.000	0.024	0.000	0.000	0.000
Steele City	NE	Saline	808.601	808.635	0.034	NE151	Longford silty clay loam, 3 to 6 percent slopes, eroded	0.000	0.000	0.000	0.034	0.000	0.034	0.000	0.000	0.000
Steele City	NE	Saline	808.635	808.714	0.079	NE151	Hobbs silt loam, channeled	0.000	0.000	0.000	0.000	0.001	0.078	0.000	0.000	0.000
Steele City	NE	Saline	808.714	808.777	0.062	NE151	Longford silty clay loam, 3 to 6 percent slopes, eroded	0.000	0.000	0.000	0.062	0.000	0.062	0.000	0.000	0.000
Steele City	NE	Saline	808.777	808.878	0.102	NE151	Hastings silty clay loam, 3 to 6 percent slopes, eroded	0.000	0.000	0.000	0.102	0.000	0.102	0.000	0.000	0.000
Steele City	NE	Saline	808.878	808.905	0.027	NE151	Longford silty clay loam, 3 to 6 percent slopes, eroded	0.000	0.000	0.000	0.027	0.000	0.027	0.000	0.000	0.000
Steele City	NE	Saline	808.905	809.036	0.131	NE151	Hastings silty clay loam, 3 to 6 percent slopes, eroded	0.000	0.000	0.000	0.131	0.000	0.131	0.000	0.000	0.000
Steele City	NE	Saline	809.036	809.214	0.178	NE151	Crete silt loam, 1 to 3 percent slopes	0.000	0.000	0.000	0.178	0.000	0.178	0.000	0.000	0.000
Steele City	NE	Saline	809.214	809.498	0.284	NE151	Crete silty clay loam, 3 to 6 percent slopes, eroded	0.000	0.000	0.000	0.284	0.000	0.284	0.000	0.000	0.000
Steele City	NE	Saline	809.498	809.510	0.012	NE151	Crete silt loam, 1 to 3 percent slopes	0.000	0.000	0.000	0.012	0.000	0.012	0.000	0.000	0.000
Steele City	NE	Saline	809.510	809.624	0.114	NE151	Crete silt loam, 0 to 1 percent slopes	0.000	0.000	0.000	0.114	0.002	0.114	0.000	0.000	0.000
Steele City	NE	Saline	809.624	809.840	0.216	NE151	Crete silty clay loam, 3 to 6 percent slopes, eroded	0.000	0.000	0.000	0.216	0.000	0.216	0.000	0.000	0.000
Steele City	NE	Saline	809.840	809.904	0.064	NE151	Crete silt loam, 1 to 3 percent slopes	0.000	0.000	0.000	0.064	0.000	0.064	0.000	0.000	0.000
Steele City	NE	Saline	809.904	810.046	0.142	NE151	Crete silt loam, 0 to 1 percent slopes	0.000	0.000	0.000	0.142	0.003	0.142	0.000	0.000	0.000
Steele City	NE	Saline	810.046	810.102	0.057	NE151	Crete silty clay loam, 3 to 6 percent slopes, eroded	0.000	0.000	0.000	0.057	0.000	0.057	0.000	0.000	0.000
Steele City	NE	Saline	810.102	810.230	0.128	NE151	Crete silt loam, 0 to 1 percent slopes	0.000	0.000	0.000	0.128	0.003	0.128	0.000	0.000	0.000
Steele City	NE	Saline	810.230	810.430	0.200	NE151	Crete silty clay loam, 3 to 6 percent slopes, eroded	0.000	0.000	0.000	0.200	0.000	0.200	0.000	0.000	0.000
Steele City	NE	Saline	810.430	810.494	0.064	NE151	Crete silt loam, 0 to 1 percent slopes	0.000	0.000	0.000	0.064	0.001	0.064	0.000	0.000	0.000
Steele City	NE	Saline	810.494	810.661	0.167	NE151	Crete silty clay loam, 3 to 6 percent slopes, eroded	0.000	0.000	0.000	0.167	0.000	0.167	0.000	0.000	0.000
Steele City	NE	Saline	810.661	810.909	0.248	NE151	Crete silt loam, 0 to 1 percent slopes	0.000	0.000	0.000	0.248	0.005	0.248	0.000	0.000	0.000
Steele City	NE	Saline	810.909	811.091	0.182	NE151	Butler silt loam, 0 to 1 percent slopes	0.000	0.000	0.000	0.182	0.009	0.182	0.000	0.000	0.000
Steele City	NE	Saline	811.091	811.341	0.250	NE151	Crete silt loam, 0 to 1 percent slopes	0.000	0.000	0.000	0.250	0.005	0.250	0.000	0.000	0.000
Steele City	NE	Saline	811.341	811.357	0.016	NE151	Crete silt loam, 1 to 3 percent slopes	0.000	0.000	0.000	0.016	0.000	0.016	0.000	0.000	0.000
Steele City	NE	Saline	811.357	811.598	0.241	NE151	Crete silt loam, 0 to 1 percent slopes	0.000	0.000	0.000	0.241	0.005	0.241	0.000	0.000	0.000
Steele City	NE	Saline	811.598	811.693	0.095	NE151	Crete silty clay loam, 3 to 6 percent slopes, eroded	0.000	0.000	0.000	0.095	0.000	0.095	0.000	0.000	0.000
Steele City	NE	Saline	811.693	811.873	0.180	NE151	Crete silt loam, 1 to 3 percent slopes	0.000	0.000	0.000	0.180	0.000	0.180	0.000	0.000	0.000
Steele City	NE	Saline	811.873	811.950	0.077	NE151	Crete silty clay loam, 3 to 6 percent slopes, eroded	0.000	0.000	0.000	0.077	0.000	0.077	0.000	0.000	0.000

Appendix K – Soils by Milepost – Steele City Segment

Pipeline Segment	State	County	Beginning Milepost	Ending Milepost	Miles	Soil Series	Soil Series Name	Wind (miles)	Water (miles)	Low revegetation on Potential (miles)	Prime Farmland (miles)	Hydric Soils (miles)	Compaction on Prone (miles)	Stoney – Rocky (miles)	Shallow Bedrock (miles)	Droghty (miles)
Steele City	NE	Saline	811.950	812.011	0.062	NE151	Crete silt loam, 0 to 1 percent slopes	0.000	0.000	0.000	0.062	0.001	0.062	0.000	0.000	0.000
Steele City	NE	Saline	812.011	812.231	0.220	NE151	Crete silty clay loam, 3 to 6 percent slopes, eroded	0.000	0.000	0.000	0.220	0.000	0.220	0.000	0.000	0.000
Steele City	NE	Saline	812.231	812.373	0.141	NE151	Crete silt loam, 1 to 3 percent slopes	0.000	0.000	0.000	0.141	0.000	0.141	0.000	0.000	0.000
Steele City	NE	Saline	812.373	812.505	0.132	NE151	Crete silt loam, 0 to 1 percent slopes	0.000	0.000	0.000	0.132	0.003	0.132	0.000	0.000	0.000
Steele City	NE	Saline	812.505	812.541	0.036	NE151	Crete silt loam, 1 to 3 percent slopes	0.000	0.000	0.000	0.036	0.000	0.036	0.000	0.000	0.000
Steele City	NE	Saline	812.541	812.575	0.034	NE151	Crete silt loam, 0 to 1 percent slopes	0.000	0.000	0.000	0.034	0.001	0.034	0.000	0.000	0.000
Steele City	NE	Saline	812.575	812.617	0.042	NE151	Crete silty clay loam, 3 to 6 percent slopes, eroded	0.000	0.000	0.000	0.042	0.000	0.042	0.000	0.000	0.000
Steele City	NE	Saline	812.617	812.687	0.071	NE151	Crete silt loam, 0 to 1 percent slopes	0.000	0.000	0.000	0.071	0.001	0.071	0.000	0.000	0.000
Steele City	NE	Saline	812.687	812.751	0.063	NE151	Crete silty clay loam, 3 to 6 percent slopes, eroded	0.000	0.000	0.000	0.063	0.000	0.063	0.000	0.000	0.000
Steele City	NE	Saline	812.751	812.818	0.068	NE151	Crete silt loam, 1 to 3 percent slopes	0.000	0.000	0.000	0.068	0.000	0.068	0.000	0.000	0.000
Steele City	NE	Saline	812.818	812.905	0.087	NE151	Crete silt loam, 0 to 1 percent slopes	0.000	0.000	0.000	0.087	0.002	0.087	0.000	0.000	0.000
Steele City	NE	Saline	812.905	812.946	0.041	NE151	Crete silt loam, 1 to 3 percent slopes	0.000	0.000	0.000	0.041	0.000	0.041	0.000	0.000	0.000
Steele City	NE	Saline	812.946	812.986	0.040	NE151	Crete silty clay loam, 3 to 6 percent slopes, eroded	0.000	0.000	0.000	0.040	0.000	0.040	0.000	0.000	0.000
Steele City	NE	Saline	812.986	813.034	0.048	NE151	Crete silt loam, 1 to 3 percent slopes	0.000	0.000	0.000	0.048	0.000	0.048	0.000	0.000	0.000
Steele City	NE	Saline	813.034	813.075	0.041	NE151	Crete silt loam, 0 to 1 percent slopes	0.000	0.000	0.000	0.041	0.001	0.041	0.000	0.000	0.000
Steele City	NE	Saline	813.075	813.105	0.030	NE151	Crete silt loam, 1 to 3 percent slopes	0.000	0.000	0.000	0.030	0.000	0.030	0.000	0.000	0.000
Steele City	NE	Saline	813.105	813.150	0.045	NE151	Crete silty clay loam, 3 to 6 percent slopes, eroded	0.000	0.000	0.000	0.045	0.000	0.045	0.000	0.000	0.000
Steele City	NE	Saline	813.150	813.353	0.203	NE151	Hastings silty clay loam, 6 to 11 percent slopes, eroded	0.000	0.203	0.000	0.000	0.000	0.203	0.000	0.000	0.000
Steele City	NE	Saline	813.353	813.592	0.239	NE151	Malmo silty clay loam, 6 to 11 percent slopes, eroded	0.000	0.239	0.000	0.000	0.000	0.239	0.000	0.000	0.000
Steele City	NE	Saline	813.592	813.704	0.112	NE151	Hobbs silt loam, channeled	0.000	0.000	0.000	0.000	0.001	0.110	0.000	0.000	0.000
Steele City	NE	Saline	813.704	813.849	0.145	NE151	Malmo silty clay loam, 6 to 11 percent slopes, eroded	0.000	0.145	0.000	0.000	0.000	0.145	0.000	0.000	0.000
Steele City	NE	Saline	813.849	813.927	0.079	NE151	Burchard clay loam, 6 to 11 percent slopes, eroded	0.000	0.079	0.000	0.079	0.000	0.079	0.000	0.000	0.000
Steele City	NE	Saline	813.927	813.987	0.060	NE151	Crete silty clay loam, 3 to 6 percent slopes, eroded	0.000	0.000	0.000	0.060	0.000	0.060	0.000	0.000	0.000
Steele City	NE	Saline	813.987	814.019	0.032	NE151	Burchard clay loam, 6 to 11 percent slopes, eroded	0.000	0.032	0.000	0.032	0.000	0.032	0.000	0.000	0.000
Steele City	NE	Saline	814.019	814.084	0.064	NE151	Burchard-Steinauer clay loams, 11 to 30 percent slopes	0.000	0.064	0.000	0.000	0.000	0.064	0.000	0.000	0.000
Steele City	NE	Saline	814.084	814.091	0.007	NE151	Burchard clay loam, 6 to 11 percent slopes, eroded	0.000	0.007	0.000	0.007	0.000	0.007	0.000	0.000	0.000
Steele City	NE	Saline	814.091	814.128	0.037	NE151	Malmo silty clay loam, 3 to 6 percent slopes, eroded	0.000	0.006	0.000	0.037	0.000	0.037	0.006	0.000	0.000
Steele City	NE	Saline	814.128	814.241	0.113	NE151	Crete silt loam, 1 to 3 percent slopes	0.000	0.000	0.000	0.113	0.000	0.113	0.000	0.000	0.000
Steele City	NE	Saline	814.241	814.269	0.029	NE151	Crete silty clay loam, 3 to 6 percent slopes, eroded	0.000	0.000	0.000	0.029	0.000	0.029	0.000	0.000	0.000
Steele City	NE	Saline	814.269	814.334	0.064	NE151	Hastings silty clay loam, 6 to 11 percent slopes, eroded	0.000	0.064	0.000	0.000	0.000	0.064	0.000	0.000	0.000
Steele City	NE	Saline	814.334	814.444	0.110	NE151	Crete silty clay loam, 3 to 6 percent slopes, eroded	0.000	0.000	0.000	0.110	0.000	0.110	0.000	0.000	0.000
Steele City	NE	Saline	814.444	814.553	0.110	NE151	Crete silt loam, 1 to 3 percent slopes	0.000	0.000	0.000	0.110	0.000	0.110	0.000	0.000	0.000
Steele City	NE	Saline	814.553	814.638	0.085	NE151	Crete silty clay loam, 3 to 6 percent slopes, eroded	0.000	0.000	0.000	0.085	0.000	0.085	0.000	0.000	0.000
Steele City	NE	Saline	814.638	814.673	0.035	NE151	Burchard clay loam, 6 to 11 percent slopes	0.000	0.035	0.000	0.035	0.000	0.035	0.000	0.000	0.000
Steele City	NE	Saline	814.673	814.778	0.105	NE151	Crete silty clay loam, 3 to 6 percent slopes, eroded	0.000	0.000	0.000	0.105	0.000	0.105	0.000	0.000	0.000
Steele City	NE	Saline	814.778	814.808	0.031	NE151	Burchard clay loam, 6 to 11 percent slopes	0.000	0.031	0.000	0.031	0.000	0.031	0.000	0.000	0.000
Steele City	NE	Saline	814.808	814.959	0.151	NE151	Burchard-Steinauer clay loams, 11 to 30 percent slopes	0.000	0.151	0.000	0.000	0.000	0.151	0.000	0.000	0.000
Steele City	NE	Saline	814.959	815.071	0.112	NE151	Malmo silty clay loam, 3 to 6 percent slopes, eroded	0.000	0.017	0.000	0.112	0.000	0.112	0.017	0.000	0.000
Steele City	NE	Saline	815.071	815.276	0.205	NE151	Crete silty clay loam, 3 to 6 percent slopes, eroded	0.000	0.000	0.000	0.205	0.000	0.205	0.000	0.000	0.000
Steele City	NE	Saline	815.276	815.309	0.034	NE151	Crete silt loam, 1 to 3 percent slopes	0.000	0.000	0.000	0.034	0.000	0.034	0.000	0.000	0.000
Steele City	NE	Saline	815.309	815.378	0.068	NE151	Crete silt loam, 0 to 1 percent slopes	0.000	0.000	0.000	0.068	0.001	0.068	0.000	0.000	0.000

Appendix K – Soils by Milepost – Steele City Segment

Pipeline Segment	State	County	Beginning Milepost	Ending Milepost	Miles	Soil Series	Soil Series Name	Wind (miles)	Water (miles)	Low revegetation on Potential (miles)	Prime Farmland (miles)	Hydric Soils (miles)	Compaction on Prone (miles)	Stoney – Rocky (miles)	Shallow Bedrock (miles)	Droghty (miles)
Steele City	NE	Saline	815.378	815.391	0.013	NE151	Crete silt loam, 1 to 3 percent slopes	0.000	0.000	0.000	0.013	0.000	0.013	0.000	0.000	0.000
Steele City	NE	Saline	815.391	815.691	0.301	NE151	Crete silty clay loam, 3 to 6 percent slopes, eroded	0.000	0.000	0.000	0.301	0.000	0.301	0.000	0.000	0.000
Steele City	NE	Saline	815.691	815.754	0.062	NE151	Crete silt loam, 0 to 1 percent slopes	0.000	0.000	0.000	0.062	0.001	0.062	0.000	0.000	0.000
Steele City	NE	Saline	815.754	815.833	0.079	NE151	Crete silt loam, 1 to 3 percent slopes	0.000	0.000	0.000	0.079	0.000	0.079	0.000	0.000	0.000
Steele City	NE	Saline	815.833	815.855	0.023	NE151	Hastings silty clay loam, 3 to 6 percent slopes, eroded	0.000	0.000	0.000	0.023	0.000	0.023	0.000	0.000	0.000
Steele City	NE	Saline	815.855	815.983	0.128	NE151	Crete silt loam, 1 to 3 percent slopes	0.000	0.000	0.000	0.128	0.000	0.128	0.000	0.000	0.000
Steele City	NE	Saline	815.983	816.173	0.190	NE151	Hastings silty clay loam, 3 to 6 percent slopes, eroded	0.000	0.000	0.000	0.190	0.000	0.190	0.000	0.000	0.000
Steele City	NE	Saline	816.173	816.338	0.165	NE151	Crete silt loam, 1 to 3 percent slopes	0.000	0.000	0.000	0.165	0.000	0.165	0.000	0.000	0.000
Steele City	NE	Saline	816.338	816.385	0.047	NE151	Crete silty clay loam, 3 to 6 percent slopes, eroded	0.000	0.000	0.000	0.047	0.000	0.047	0.000	0.000	0.000
Steele City	NE	Saline	816.385	816.575	0.190	NE151	Crete silt loam, 1 to 3 percent slopes	0.000	0.000	0.000	0.190	0.000	0.190	0.000	0.000	0.000
Steele City	NE	Saline	816.575	816.636	0.061	NE151	Hastings silty clay loam, 6 to 11 percent slopes, eroded	0.000	0.061	0.000	0.000	0.000	0.061	0.000	0.000	0.000
Steele City	NE	Saline	816.636	816.672	0.036	NE151	Crete silt loam, 0 to 1 percent slopes	0.000	0.000	0.000	0.036	0.001	0.036	0.000	0.000	0.000
Steele City	NE	Saline	816.672	816.701	0.029	NE151	Hastings silty clay loam, 6 to 11 percent slopes, eroded	0.000	0.029	0.000	0.000	0.000	0.029	0.000	0.000	0.000
Steele City	NE	Saline	816.701	816.771	0.070	NE151	Crete silt loam, 0 to 1 percent slopes	0.000	0.000	0.000	0.070	0.001	0.070	0.000	0.000	0.000
Steele City	NE	Saline	816.771	816.807	0.037	NE151	Butler silt loam, 0 to 1 percent slopes	0.000	0.000	0.000	0.037	0.002	0.037	0.000	0.000	0.000
Steele City	NE	Saline	816.807	816.978	0.170	NE151	Crete silt loam, 0 to 1 percent slopes	0.000	0.000	0.000	0.170	0.003	0.170	0.000	0.000	0.000
Steele City	NE	Saline	816.978	817.017	0.040	NE151	Crete silty clay loam, 3 to 6 percent slopes, eroded	0.000	0.000	0.000	0.040	0.000	0.040	0.000	0.000	0.000
Steele City	NE	Saline	817.017	817.082	0.064	NE151	Longford silty clay loam, 6 to 11 percent slopes, eroded	0.000	0.064	0.000	0.000	0.000	0.064	0.000	0.000	0.000
Steele City	NE	Saline	817.082	817.197	0.116	NE151	Hastings silt loam, 3 to 6 percent slopes	0.000	0.000	0.000	0.116	0.000	0.116	0.000	0.000	0.000
Steele City	NE	Saline	817.197	817.231	0.033	NE151	Hastings silty clay loam, 6 to 11 percent slopes, eroded	0.000	0.033	0.000	0.000	0.000	0.033	0.000	0.000	0.000
Steele City	NE	Saline	817.231	817.303	0.072	NE151	Hastings silt loam, 3 to 6 percent slopes	0.000	0.000	0.000	0.072	0.000	0.072	0.000	0.000	0.000
Steele City	NE	Saline	817.303	817.414	0.111	NE151	Hastings silty clay loam, 3 to 6 percent slopes, eroded	0.000	0.000	0.000	0.111	0.000	0.111	0.000	0.000	0.000
Steele City	NE	Saline	817.414	817.486	0.072	NE151	Hastings silty clay loam, 6 to 11 percent slopes, eroded	0.000	0.072	0.000	0.000	0.000	0.072	0.000	0.000	0.000
Steele City	NE	Saline	817.486	817.547	0.060	NE151	Crete silty clay loam, 3 to 6 percent slopes, eroded	0.000	0.000	0.000	0.060	0.000	0.060	0.000	0.000	0.000
Steele City	NE	Saline	817.547	817.598	0.052	NE151	Hastings silty clay loam, 6 to 11 percent slopes, eroded	0.000	0.052	0.000	0.000	0.000	0.052	0.000	0.000	0.000
Steele City	NE	Saline	817.598	817.659	0.060	NE151	Crete silty clay loam, 3 to 6 percent slopes, eroded	0.000	0.000	0.000	0.060	0.000	0.060	0.000	0.000	0.000
Steele City	NE	Saline	817.659	817.783	0.124	NE151	Longford silty clay loam, 6 to 11 percent slopes, eroded	0.000	0.124	0.000	0.000	0.000	0.124	0.000	0.000	0.000
Steele City	NE	Saline	817.783	817.914	0.131	NE151	Crete silty clay loam, 3 to 6 percent slopes, eroded	0.000	0.000	0.000	0.131	0.000	0.131	0.000	0.000	0.000
Steele City	NE	Saline	817.914	817.970	0.056	NE151	Crete silt loam, 1 to 3 percent slopes	0.000	0.000	0.000	0.056	0.000	0.056	0.000	0.000	0.000
Steele City	NE	Saline	817.970	818.035	0.065	NE151	Crete silty clay loam, 3 to 6 percent slopes, eroded	0.000	0.000	0.000	0.065	0.000	0.065	0.000	0.000	0.000
Steele City	NE	Saline	818.035	818.108	0.073	NE151	Hastings silty clay loam, 6 to 11 percent slopes, eroded	0.000	0.073	0.000	0.000	0.000	0.073	0.000	0.000	0.000
Steele City	NE	Saline	818.108	818.147	0.040	NE151	Crete silty clay loam, 3 to 6 percent slopes, eroded	0.000	0.000	0.000	0.040	0.000	0.040	0.000	0.000	0.000
Steele City	NE	Saline	818.147	818.189	0.042	NE151	Hastings silty clay loam, 6 to 11 percent slopes, eroded	0.000	0.042	0.000	0.000	0.000	0.042	0.000	0.000	0.000

Appendix K – Soils by Milepost – Steele City Segment

Pipeline Segment	State	County	Beginning Milepost	Ending Milepost	Miles	Soil Series	Soil Series Name	Wind (miles)	Water (miles)	Low revegetation on Potential (miles)	Prime Farmland (miles)	Hydric Soils (miles)	Compaction on Prone (miles)	Stoney – Rocky (miles)	Shallow Bedrock (miles)	Droghty (miles)
Steele City	NE	Saline	818.189	818.253	0.064	NE151	Malmo silty clay loam, 6 to 11 percent slopes, eroded	0.000	0.064	0.000	0.000	0.000	0.064	0.000	0.000	0.000
Steele City	NE	Saline	818.253	818.353	0.100	NE151	Crete silty clay loam, 3 to 6 percent slopes, eroded	0.000	0.000	0.000	0.100	0.000	0.100	0.000	0.000	0.000
Steele City	NE	Saline	818.353	818.425	0.072	NE151	Malmo silty clay loam, 6 to 11 percent slopes, eroded	0.000	0.072	0.000	0.000	0.000	0.072	0.000	0.000	0.000
Steele City	NE	Saline	818.425	818.467	0.042	NE151	Crete silty clay loam, 3 to 6 percent slopes, eroded	0.000	0.000	0.000	0.042	0.000	0.042	0.000	0.000	0.000
Steele City	NE	Saline	818.467	818.604	0.136	NE151	Crete silt loam, 0 to 1 percent slopes	0.000	0.000	0.000	0.136	0.003	0.136	0.000	0.000	0.000
Steele City	NE	Saline	818.604	818.638	0.035	NE151	Butler silt loam, 0 to 1 percent slopes	0.000	0.000	0.000	0.035	0.002	0.035	0.000	0.000	0.000
Steele City	NE	Saline	818.638	818.694	0.055	NE151	Crete silt loam, 0 to 1 percent slopes	0.000	0.000	0.000	0.055	0.001	0.055	0.000	0.000	0.000
Steele City	NE	Saline	818.694	818.856	0.163	NE151	Crete silty clay loam, 3 to 6 percent slopes, eroded	0.000	0.000	0.000	0.163	0.000	0.163	0.000	0.000	0.000
Steele City	NE	Saline	818.856	818.936	0.080	NE151	Crete silt loam, 1 to 3 percent slopes	0.000	0.000	0.000	0.080	0.000	0.080	0.000	0.000	0.000
Steele City	NE	Saline	818.936	819.017	0.082	NE151	Crete silty clay loam, 3 to 6 percent slopes, eroded	0.000	0.000	0.000	0.082	0.000	0.082	0.000	0.000	0.000
Steele City	NE	Saline	819.017	819.208	0.191	NE151	Hastings silty clay loam, 6 to 11 percent slopes, eroded	0.000	0.191	0.000	0.000	0.000	0.191	0.000	0.000	0.000
Steele City	NE	Saline	819.208	819.257	0.049	NE151	Crete silty clay loam, 3 to 6 percent slopes, eroded	0.000	0.000	0.000	0.049	0.000	0.049	0.000	0.000	0.000
Steele City	NE	Saline	819.257	819.415	0.157	NE151	Hastings silty clay loam, 6 to 11 percent slopes, eroded	0.000	0.157	0.000	0.000	0.000	0.157	0.000	0.000	0.000
Steele City	NE	Saline	819.415	819.522	0.107	NE151	Malmo silty clay loam, 6 to 11 percent slopes, eroded	0.000	0.107	0.000	0.000	0.000	0.107	0.000	0.000	0.000
Steele City	NE	Saline	819.522	819.583	0.061	NE151	Hastings silty clay loam, 6 to 11 percent slopes, eroded	0.000	0.061	0.000	0.000	0.000	0.061	0.000	0.000	0.000
Steele City	NE	Saline	819.583	819.606	0.023	NE151	Hastings silty clay loam, 3 to 6 percent slopes, eroded	0.000	0.000	0.000	0.023	0.000	0.023	0.000	0.000	0.000
Steele City	NE	Saline	819.606	819.708	0.102	NE151	Hastings silty clay loam, 6 to 11 percent slopes, eroded	0.000	0.102	0.000	0.000	0.000	0.102	0.000	0.000	0.000
Steele City	NE	Saline	819.708	819.828	0.120	NE151	Hastings silty clay loam, 3 to 6 percent slopes, eroded	0.000	0.000	0.000	0.120	0.000	0.120	0.000	0.000	0.000
Steele City	NE	Saline	819.828	820.025	0.197	NE151	Crete silt loam, 1 to 3 percent slopes	0.000	0.000	0.000	0.197	0.000	0.197	0.000	0.000	0.000
Steele City	NE	Saline	820.025	820.239	0.215	NE151	Crete silty clay loam, 3 to 6 percent slopes, eroded	0.000	0.000	0.000	0.215	0.000	0.215	0.000	0.000	0.000
Steele City	NE	Saline	820.239	820.291	0.052	NE151	Hastings silty clay loam, 6 to 11 percent slopes, eroded	0.000	0.052	0.000	0.000	0.000	0.052	0.000	0.000	0.000
Steele City	NE	Saline	820.291	820.382	0.090	NE151	Crete silty clay loam, 3 to 6 percent slopes, eroded	0.000	0.000	0.000	0.090	0.000	0.090	0.000	0.000	0.000
Steele City	NE	Saline	820.382	820.386	0.004	NE151	Crete silt loam, 1 to 3 percent slopes	0.000	0.000	0.000	0.004	0.000	0.004	0.000	0.000	0.000
Steele City	NE	Saline	820.386	820.551	0.165	NE151	Crete silty clay loam, 3 to 6 percent slopes, eroded	0.000	0.000	0.000	0.165	0.000	0.165	0.000	0.000	0.000
Steele City	NE	Saline	820.551	820.708	0.157	NE151	Longford silty clay loam, 6 to 11 percent slopes, eroded	0.000	0.157	0.000	0.000	0.000	0.157	0.000	0.000	0.000
Steele City	NE	Saline	820.708	820.766	0.058	NE151	Crete silty clay loam, 3 to 6 percent slopes, eroded	0.000	0.000	0.000	0.058	0.000	0.058	0.000	0.000	0.000
Steele City	NE	Saline	820.766	820.935	0.169	NE151	Crete silt loam, 1 to 3 percent slopes	0.000	0.000	0.000	0.169	0.000	0.169	0.000	0.000	0.000
Steele City	NE	Saline	820.935	821.075	0.140	NE151	Crete silty clay loam, 3 to 6 percent slopes, eroded	0.000	0.000	0.000	0.140	0.000	0.140	0.000	0.000	0.000
Steele City	NE	Saline	821.075	821.135	0.060	NE151	Crete silt loam, 1 to 3 percent slopes	0.000	0.000	0.000	0.060	0.000	0.060	0.000	0.000	0.000
Steele City	NE	Saline	821.135	821.188	0.053	NE151	Crete silt loam, 0 to 1 percent slopes	0.000	0.000	0.000	0.053	0.001	0.053	0.000	0.000	0.000
Steele City	NE	Saline	821.188	821.233	0.045	NE151	Crete silty clay loam, 3 to 6 percent slopes, eroded	0.000	0.000	0.000	0.045	0.000	0.045	0.000	0.000	0.000
Steele City	NE	Saline	821.233	821.262	0.029	NE151	Crete silt loam, 1 to 3 percent slopes	0.000	0.000	0.000	0.029	0.000	0.029	0.000	0.000	0.000
Steele City	NE	Saline	821.262	821.332	0.070	NE151	Crete silt loam, 0 to 1 percent slopes	0.000	0.000	0.000	0.070	0.001	0.070	0.000	0.000	0.000
Steele City	NE	Saline	821.332	821.607	0.275	NE151	Crete silt loam, 1 to 3 percent slopes	0.000	0.000	0.000	0.275	0.000	0.275	0.000	0.000	0.000
Steele City	NE	Saline	821.607	821.857	0.250	NE151	Crete silty clay loam, 3 to 6 percent slopes, eroded	0.000	0.000	0.000	0.250	0.000	0.250	0.000	0.000	0.000
Steele City	NE	Saline	821.857	821.927	0.071	NE151	Longford silty clay loam, 6 to 11 percent slopes, eroded	0.000	0.071	0.000	0.000	0.000	0.071	0.000	0.000	0.000

Appendix K – Soils by Milepost – Steele City Segment

Pipeline Segment	State	County	Beginning Milepost	Ending Milepost	Miles	Soil Series	Soil Series Name	Wind (miles)	Water (miles)	Low revegetation on Potential (miles)	Prime Farmland (miles)	Hydric Soils (miles)	Compaction on Prone (miles)	Stoney – Rocky (miles)	Shallow Bedrock (miles)	Droghty (miles)
Steele City	NE	Saline	821.927	821.981	0.053	NE151	Hobbs silt loam, channeled	0.000	0.000	0.000	0.000	0.001	0.053	0.000	0.000	0.000
Steele City	NE	Saline	821.981	822.028	0.048	NE151	Geary silty clay loam, 11 to 30 percent slopes	0.000	0.048	0.000	0.000	0.000	0.048	0.000	0.000	0.000
Steele City	NE	Saline	822.028	822.118	0.090	NE151	Hobbs silt loam, channeled	0.000	0.000	0.000	0.000	0.001	0.089	0.000	0.000	0.000
Steele City	NE	Saline	822.118	822.169	0.051	NE151	Geary silty clay loam, 11 to 30 percent slopes	0.000	0.051	0.000	0.000	0.000	0.051	0.000	0.000	0.000
Steele City	NE	Saline	822.169	822.232	0.063	NE151	Longford silty clay loam, 3 to 6 percent slopes, eroded	0.000	0.000	0.000	0.063	0.000	0.063	0.000	0.000	0.000
Steele City	NE	Saline	822.232	822.505	0.274	NE151	Crete silty clay loam, 3 to 6 percent slopes, eroded	0.000	0.000	0.000	0.274	0.000	0.274	0.000	0.000	0.000
Steele City	NE	Saline	822.505	822.771	0.266	NE151	Crete silt loam, 1 to 3 percent slopes	0.000	0.000	0.000	0.266	0.000	0.266	0.000	0.000	0.000
Steele City	NE	Saline	822.771	822.983	0.212	NE151	Crete silty clay loam, 3 to 6 percent slopes, eroded	0.000	0.000	0.000	0.212	0.000	0.212	0.000	0.000	0.000
Steele City	NE	Saline	822.983	823.033	0.050	NE151	Crete silt loam, 1 to 3 percent slopes	0.000	0.000	0.000	0.050	0.000	0.050	0.000	0.000	0.000
Steele City	NE	Saline	823.033	823.364	0.331	NE151	Crete silty clay loam, 3 to 6 percent slopes, eroded	0.000	0.000	0.000	0.331	0.000	0.331	0.000	0.000	0.000
Steele City	NE	Saline	823.364	823.434	0.070	NE151	Longford silty clay loam, 3 to 6 percent slopes	0.000	0.000	0.000	0.070	0.000	0.070	0.000	0.000	0.000
Steele City	NE	Saline	823.434	823.481	0.047	NE151	Longford silty clay loam, 3 to 6 percent slopes, eroded	0.000	0.000	0.000	0.047	0.000	0.047	0.000	0.000	0.000
Steele City	NE	Saline	823.481	823.522	0.041	NE151	Geary silty clay loam, 11 to 30 percent slopes	0.000	0.041	0.000	0.000	0.000	0.041	0.000	0.000	0.000
Steele City	NE	Saline	823.522	823.570	0.049	NE151	Longford silty clay loam, 3 to 6 percent slopes, eroded	0.000	0.000	0.000	0.049	0.000	0.049	0.000	0.000	0.000
Steele City	NE	Saline	823.570	823.590	0.020	NE151	Crete silty clay loam, 3 to 6 percent slopes, eroded	0.000	0.000	0.000	0.020	0.000	0.020	0.000	0.000	0.000
Steele City	NE	Saline	823.590	823.622	0.032	NE151	Crete silt loam, 1 to 3 percent slopes	0.000	0.000	0.000	0.032	0.000	0.032	0.000	0.000	0.000
Steele City	NE	Saline	823.622	823.662	0.040	NE151	Crete silty clay loam, 3 to 6 percent slopes, eroded	0.000	0.000	0.000	0.040	0.000	0.040	0.000	0.000	0.000
Steele City	NE	Saline	823.662	823.687	0.026	NE151	Longford silty clay loam, 6 to 11 percent slopes, eroded	0.000	0.026	0.000	0.000	0.000	0.026	0.000	0.000	0.000
Steele City	NE	Saline	823.687	823.745	0.058	NE151	Crete silty clay loam, 3 to 6 percent slopes, eroded	0.000	0.000	0.000	0.058	0.000	0.058	0.000	0.000	0.000
Steele City	NE	Saline	823.745	823.779	0.034	NE151	Crete silt loam, 1 to 3 percent slopes	0.000	0.000	0.000	0.034	0.000	0.034	0.000	0.000	0.000
Steele City	NE	Saline	823.779	823.874	0.095	NE151	Crete silty clay loam, 3 to 6 percent slopes, eroded	0.000	0.000	0.000	0.095	0.000	0.095	0.000	0.000	0.000
Steele City	NE	Saline	823.874	823.960	0.086	NE151	Muir silt loam, 1 to 3 percent slopes	0.000	0.000	0.000	0.086	0.000	0.086	0.000	0.000	0.000
Steele City	NE	Saline	823.960	824.062	0.102	NE151	Longford silty clay loam, 3 to 6 percent slopes, eroded	0.000	0.000	0.000	0.102	0.000	0.102	0.000	0.000	0.000
Steele City	NE	Saline	824.062	824.199	0.136	NE151	Hastings silty clay loam, 3 to 6 percent slopes, eroded	0.000	0.000	0.000	0.136	0.000	0.136	0.000	0.000	0.000
Steele City	NE	Saline	824.199	824.254	0.056	NE151	Longford silty clay loam, 3 to 6 percent slopes, eroded	0.000	0.000	0.000	0.056	0.000	0.056	0.000	0.000	0.000
Steele City	NE	Saline	824.254	824.331	0.077	NE151	Hastings silty clay loam, 3 to 6 percent slopes, eroded	0.000	0.000	0.000	0.077	0.000	0.077	0.000	0.000	0.000
Steele City	NE	Saline	824.331	824.427	0.097	NE151	Deroin silty clay loam, 6 to 11 percent slopes, eroded	0.000	0.097	0.000	0.000	0.000	0.097	0.000	0.000	0.000
Steele City	NE	Saline	824.427	824.478	0.050	NE151	Longford silty clay loam, 3 to 6 percent slopes, eroded	0.000	0.000	0.000	0.050	0.000	0.050	0.000	0.000	0.000
Steele City	NE	Jefferson	825.333	825.372	0.039	NE095	Morrill soils, 3 to 11 percent slopes, severely eroded	0.000	0.039	0.000	0.000	0.000	0.039	0.039	0.000	0.000
Steele City	NE	Jefferson	825.524	825.558	0.034	NE095	Morrill soils, 3 to 11 percent slopes, severely eroded	0.000	0.034	0.000	0.000	0.000	0.034	0.034	0.000	0.000
Steele City	NE	Jefferson	825.655	825.716	0.061	NE095	Mayberry silty clay loam, 3 to 7 percent slopes, eroded	0.000	0.000	0.000	0.061	0.000	0.061	0.000	0.000	0.000
Steele City	NE	Jefferson	825.751	825.937	0.186	NE095	Crete silt loam, 0 to 1 percent slopes	0.000	0.000	0.000	0.186	0.000	0.186	0.000	0.000	0.000
Steele City	NE	Jefferson	825.974	826.038	0.064	NE095	Crete silt loam, 0 to 1 percent slopes	0.000	0.000	0.000	0.064	0.000	0.064	0.000	0.000	0.000
Steele City	NE	Jefferson	826.038	826.107	0.069	NE095	Crete silt loam, 1 to 3 percent slopes	0.000	0.000	0.000	0.069	0.001	0.068	0.000	0.000	0.000
Steele City	NE	Jefferson	826.107	826.210	0.103	NE095	Crete silt loam, 0 to 1 percent slopes	0.000	0.000	0.000	0.103	0.000	0.103	0.000	0.000	0.000

Appendix K – Soils by Milepost – Steele City Segment

Pipeline Segment	State	County	Beginning Milepost	Ending Milepost	Miles	Soil Series	Soil Series Name	Wind (miles)	Water (miles)	Low revegetation on Potential (miles)	Prime Farmland (miles)	Hydric Soils (miles)	Compaction on Prone (miles)	Stoney – Rocky (miles)	Shallow Bedrock (miles)	Droghty (miles)
Steele City	NE	Jefferson	826.210	826.428	0.218	NE095	Crete silt loam, 1 to 3 percent slopes	0.000	0.000	0.000	0.218	0.002	0.216	0.000	0.000	0.000
Steele City	NE	Jefferson	826.428	826.506	0.079	NE095	Crete silty clay loam, 3 to 7 percent slopes, eroded	0.000	0.000	0.000	0.079	0.000	0.079	0.000	0.000	0.000
Steele City	NE	Jefferson	826.506	826.644	0.137	NE095	Morrill soils, 3 to 11 percent slopes, severely eroded	0.000	0.137	0.000	0.000	0.000	0.137	0.137	0.000	0.000
Steele City	NE	Jefferson	826.644	826.697	0.053	NE095	Morrill clay loam, 11 to 30 percent slopes	0.000	0.053	0.000	0.000	0.000	0.053	0.053	0.000	0.000
Steele City	NE	Jefferson	826.697	826.746	0.049	NE095	Malmo clay, 3 to 11 percent slopes, eroded	0.000	0.049	0.000	0.000	0.000	0.049	0.000	0.000	0.000
Steele City	NE	Jefferson	826.746	826.869	0.123	NE095	Morrill clay loam, 11 to 30 percent slopes	0.000	0.123	0.000	0.000	0.000	0.123	0.123	0.000	0.000
Steele City	NE	Jefferson	826.869	826.907	0.038	NE095	Mayberry silty clay loam, 3 to 7 percent slopes, eroded	0.000	0.000	0.000	0.038	0.000	0.038	0.000	0.000	0.000
Steele City	NE	Jefferson	826.907	827.010	0.103	NE095	Morrill clay loam, 11 to 30 percent slopes	0.000	0.103	0.000	0.000	0.000	0.103	0.103	0.000	0.000
Steele City	NE	Jefferson	827.010	827.073	0.063	NE095	Malmo clay, 3 to 11 percent slopes, eroded	0.000	0.063	0.000	0.000	0.000	0.063	0.000	0.000	0.000
Steele City	NE	Jefferson	827.073	827.121	0.049	NE095	Crete silty clay loam, 3 to 7 percent slopes, eroded	0.000	0.000	0.000	0.049	0.000	0.049	0.000	0.000	0.000
Steele City	NE	Jefferson	827.121	827.210	0.089	NE095	Crete silt loam, 1 to 3 percent slopes	0.000	0.000	0.000	0.089	0.001	0.088	0.000	0.000	0.000
Steele City	NE	Jefferson	827.210	827.309	0.099	NE095	Crete silty clay loam, 3 to 7 percent slopes, eroded	0.000	0.000	0.000	0.099	0.000	0.099	0.000	0.000	0.000
Steele City	NE	Jefferson	827.309	827.361	0.053	NE095	Hastings silty clay loam, 3 to 11 percent slopes, severely eroded	0.000	0.053	0.000	0.000	0.000	0.053	0.000	0.000	0.000
Steele City	NE	Jefferson	827.361	827.407	0.045	NE095	Crete silty clay loam, 3 to 7 percent slopes, eroded	0.000	0.000	0.000	0.045	0.000	0.045	0.000	0.000	0.000
Steele City	NE	Jefferson	827.407	827.541	0.134	NE095	Crete silt loam, 1 to 3 percent slopes	0.000	0.000	0.000	0.134	0.001	0.133	0.000	0.000	0.000
Steele City	NE	Jefferson	827.541	827.640	0.098	NE095	Crete silty clay loam, 3 to 7 percent slopes, eroded	0.000	0.000	0.000	0.098	0.000	0.098	0.000	0.000	0.000
Steele City	NE	Jefferson	827.640	827.718	0.078	NE095	Mayberry silty clay loam, 3 to 7 percent slopes, eroded	0.000	0.000	0.000	0.078	0.000	0.078	0.000	0.000	0.000
Steele City	NE	Jefferson	827.718	827.733	0.016	NE095	Crete silty clay loam, 3 to 7 percent slopes, eroded	0.000	0.000	0.000	0.016	0.000	0.016	0.000	0.000	0.000
Steele City	NE	Jefferson	827.733	827.900	0.167	NE095	Mayberry silty clay loam, 3 to 7 percent slopes, eroded	0.000	0.000	0.000	0.167	0.000	0.167	0.000	0.000	0.000
Steele City	NE	Jefferson	827.900	827.997	0.097	NE095	Nodaway silt loam, channeled, occasionally flooded	0.000	0.000	0.000	0.000	0.002	0.097	0.000	0.000	0.000
Steele City	NE	Jefferson	827.997	828.049	0.052	NE095	Judson silt loam, 2 to 5 percent slopes	0.000	0.000	0.000	0.052	0.000	0.052	0.000	0.000	0.000
Steele City	NE	Jefferson	828.049	828.102	0.053	NE095	Malmo clay, 3 to 11 percent slopes, eroded	0.000	0.053	0.000	0.000	0.000	0.053	0.000	0.000	0.000
Steele City	NE	Jefferson	828.102	828.246	0.145	NE095	Mayberry silty clay loam, 3 to 7 percent slopes, eroded	0.000	0.000	0.000	0.145	0.000	0.145	0.000	0.000	0.000
Steele City	NE	Jefferson	828.246	828.305	0.058	NE095	Burchard clay loam, 11 to 30 percent slopes	0.000	0.058	0.000	0.000	0.000	0.058	0.000	0.000	0.000
Steele City	NE	Jefferson	828.305	828.338	0.034	NE095	Mayberry silty clay loam, 3 to 7 percent slopes, eroded	0.000	0.000	0.000	0.034	0.000	0.034	0.000	0.000	0.000
Steele City	NE	Jefferson	828.338	828.507	0.169	NE095	Burchard clay loam, 11 to 30 percent slopes	0.000	0.169	0.000	0.000	0.000	0.169	0.000	0.000	0.000
Steele City	NE	Jefferson	828.507	828.543	0.037	NE095	Mayberry silty clay loam, 3 to 7 percent slopes, eroded	0.000	0.000	0.000	0.037	0.000	0.037	0.000	0.000	0.000
Steele City	NE	Jefferson	828.848	828.886	0.038	NE095	Crete silt loam, 1 to 3 percent slopes	0.000	0.000	0.000	0.038	0.000	0.038	0.000	0.000	0.000
Steele City	NE	Jefferson	828.886	828.969	0.083	NE095	Crete silty clay loam, 3 to 7 percent slopes, eroded	0.000	0.000	0.000	0.083	0.000	0.083	0.000	0.000	0.000
Steele City	NE	Jefferson	828.969	829.041	0.072	NE095	Crete silt loam, 1 to 3 percent slopes	0.000	0.000	0.000	0.072	0.001	0.071	0.000	0.000	0.000
Steele City	NE	Jefferson	829.041	829.130	0.090	NE095	Crete silty clay loam, 3 to 7 percent slopes, eroded	0.000	0.000	0.000	0.090	0.000	0.090	0.000	0.000	0.000
Steele City	NE	Jefferson	829.130	829.194	0.064	NE095	Crete silt loam, 1 to 3 percent slopes	0.000	0.000	0.000	0.064	0.001	0.063	0.000	0.000	0.000
Steele City	NE	Jefferson	829.194	829.263	0.068	NE095	Crete silty clay loam, 3 to 7 percent slopes, eroded	0.000	0.000	0.000	0.068	0.000	0.068	0.000	0.000	0.000
Steele City	NE	Jefferson	829.263	829.307	0.045	NE095	Crete silt loam, 1 to 3 percent slopes	0.000	0.000	0.000	0.045	0.000	0.044	0.000	0.000	0.000
Steele City	NE	Jefferson	829.307	829.646	0.339	NE095	Crete silt loam, 0 to 1 percent slopes	0.000	0.000	0.000	0.339	0.000	0.339	0.000	0.000	0.000
Steele City	NE	Jefferson	829.646	829.786	0.140	NE095	Crete silt loam, 1 to 3 percent slopes	0.000	0.000	0.000	0.140	0.001	0.139	0.000	0.000	0.000
Steele City	NE	Jefferson	829.786	829.858	0.071	NE095	Crete silty clay loam, 3 to 7 percent slopes, eroded	0.000	0.000	0.000	0.071	0.000	0.071	0.000	0.000	0.000
Steele City	NE	Jefferson	829.858	830.041	0.184	NE095	Crete silt loam, 1 to 3 percent slopes	0.000	0.000	0.000	0.184	0.002	0.182	0.000	0.000	0.000

Appendix K – Soils by Milepost – Steele City Segment

Pipeline Segment	State	County	Beginning Milepost	Ending Milepost	Miles	Soil Series	Soil Series Name	Wind (miles)	Water (miles)	Low revegetation on Potential (miles)	Prime Farmland (miles)	Hydric Soils (miles)	Compaction on Prone (miles)	Stoney – Rocky (miles)	Shallow Bedrock (miles)	Droghty (miles)
Steele City	NE	Jefferson	830.041	830.101	0.059	NE095	Crete silty clay loam, 3 to 7 percent slopes, eroded	0.000	0.000	0.000	0.059	0.000	0.059	0.000	0.000	0.000
Steele City	NE	Jefferson	830.101	830.136	0.036	NE095	Crete silt loam, 1 to 3 percent slopes	0.000	0.000	0.000	0.036	0.000	0.035	0.000	0.000	0.000
Steele City	NE	Jefferson	830.136	830.224	0.088	NE095	Crete silt loam, 0 to 1 percent slopes	0.000	0.000	0.000	0.088	0.000	0.088	0.000	0.000	0.000
Steele City	NE	Jefferson	830.224	830.275	0.051	NE095	Butler silt loam	0.000	0.000	0.000	0.051	0.001	0.051	0.000	0.000	0.000
Steele City	NE	Jefferson	830.275	830.513	0.238	NE095	Crete silt loam, 0 to 1 percent slopes	0.000	0.000	0.000	0.238	0.000	0.238	0.000	0.000	0.000
Steele City	NE	Jefferson	830.513	830.659	0.146	NE095	Crete silt loam, 1 to 3 percent slopes	0.000	0.000	0.000	0.146	0.001	0.144	0.000	0.000	0.000
Steele City	NE	Jefferson	830.659	830.697	0.038	NE095	Crete silty clay loam, 3 to 7 percent slopes, eroded	0.000	0.000	0.000	0.038	0.000	0.038	0.000	0.000	0.000
Steele City	NE	Jefferson	830.697	830.764	0.066	NE095	Crete silt loam, 1 to 3 percent slopes	0.000	0.000	0.000	0.066	0.001	0.066	0.000	0.000	0.000
Steele City	NE	Jefferson	830.764	830.854	0.091	NE095	Crete silt loam, 0 to 1 percent slopes	0.000	0.000	0.000	0.091	0.000	0.091	0.000	0.000	0.000
Steele City	NE	Jefferson	830.854	830.949	0.095	NE095	Crete silt loam, 1 to 3 percent slopes	0.000	0.000	0.000	0.095	0.001	0.094	0.000	0.000	0.000
Steele City	NE	Jefferson	830.949	831.004	0.055	NE095	Crete silty clay loam, 3 to 7 percent slopes, eroded	0.000	0.000	0.000	0.055	0.000	0.055	0.000	0.000	0.000
Steele City	NE	Jefferson	831.004	831.135	0.131	NE095	Crete silt loam, 1 to 3 percent slopes	0.000	0.000	0.000	0.131	0.001	0.130	0.000	0.000	0.000
Steele City	NE	Jefferson	831.135	831.199	0.065	NE095	Crete silty clay loam, 3 to 7 percent slopes, eroded	0.000	0.000	0.000	0.065	0.000	0.065	0.000	0.000	0.000
Steele City	NE	Jefferson	831.199	831.262	0.063	NE095	Mayberry silty clay loam, 7 to 11 percent slopes	0.000	0.063	0.000	0.000	0.000	0.063	0.000	0.000	0.000
Steele City	NE	Jefferson	831.262	831.328	0.066	NE095	Crete silty clay loam, 3 to 7 percent slopes, eroded	0.000	0.000	0.000	0.066	0.000	0.066	0.000	0.000	0.000
Steele City	NE	Jefferson	831.328	831.409	0.081	NE095	Crete silt loam, 1 to 3 percent slopes	0.000	0.000	0.000	0.081	0.001	0.080	0.000	0.000	0.000
Steele City	NE	Jefferson	831.409	831.641	0.232	NE095	Crete silt loam, 0 to 1 percent slopes	0.000	0.000	0.000	0.232	0.000	0.232	0.000	0.000	0.000
Steele City	NE	Jefferson	831.641	831.694	0.053	NE095	Crete silt loam, 1 to 3 percent slopes	0.000	0.000	0.000	0.053	0.001	0.053	0.000	0.000	0.000
Steele City	NE	Jefferson	831.694	831.705	0.010	NE095	Mayberry silty clay loam, 7 to 11 percent slopes	0.000	0.010	0.000	0.000	0.000	0.010	0.000	0.000	0.000
Steele City	NE	Jefferson	831.705	831.733	0.028	NE095	Crete silt loam, 1 to 3 percent slopes	0.000	0.000	0.000	0.028	0.000	0.028	0.000	0.000	0.000
Steele City	NE	Jefferson	831.733	831.861	0.128	NE095	Crete silt loam, 0 to 1 percent slopes	0.000	0.000	0.000	0.128	0.000	0.128	0.000	0.000	0.000
Steele City	NE	Jefferson	831.861	831.875	0.014	NE095	Crete silt loam, 1 to 3 percent slopes	0.000	0.000	0.000	0.014	0.000	0.014	0.000	0.000	0.000
Steele City	NE	Jefferson	831.875	832.063	0.188	NE095	Crete silt loam, 0 to 1 percent slopes	0.000	0.000	0.000	0.188	0.000	0.188	0.000	0.000	0.000
Steele City	NE	Jefferson	832.063	832.109	0.046	NE095	Crete silt loam, 1 to 3 percent slopes	0.000	0.000	0.000	0.046	0.000	0.046	0.000	0.000	0.000
Steele City	NE	Jefferson	832.109	832.168	0.059	NE095	Crete silty clay loam, 3 to 7 percent slopes, eroded	0.000	0.000	0.000	0.059	0.000	0.059	0.000	0.000	0.000
Steele City	NE	Jefferson	832.168	832.315	0.146	NE095	Malmo clay, 3 to 11 percent slopes, eroded	0.000	0.146	0.000	0.000	0.000	0.146	0.000	0.000	0.000
Steele City	NE	Jefferson	832.315	832.387	0.072	NE095	Mayberry silty clay loam, 3 to 7 percent slopes, eroded	0.000	0.000	0.000	0.072	0.000	0.072	0.000	0.000	0.000
Steele City	NE	Jefferson	832.387	832.433	0.046	NE095	Nodaway silt loam, occasionally flooded	0.000	0.000	0.000	0.046	0.001	0.046	0.000	0.000	0.000
Steele City	NE	Jefferson	832.433	832.452	0.019	NE095	Mayberry silty clay loam, 3 to 7 percent slopes, eroded	0.000	0.000	0.000	0.019	0.000	0.019	0.000	0.000	0.000
Steele City	NE	Jefferson	832.452	832.499	0.047	NE095	Crete silty clay loam, 3 to 7 percent slopes, eroded	0.000	0.000	0.000	0.047	0.000	0.047	0.000	0.000	0.000
Steele City	NE	Jefferson	832.499	832.542	0.044	NE095	Crete silt loam, 1 to 3 percent slopes	0.000	0.000	0.000	0.044	0.000	0.043	0.000	0.000	0.000
Steele City	NE	Jefferson	832.542	832.642	0.099	NE095	Crete silt loam, 0 to 1 percent slopes	0.000	0.000	0.000	0.099	0.000	0.099	0.000	0.000	0.000
Steele City	NE	Jefferson	832.642	832.931	0.290	NE095	Crete silty clay loam, 3 to 7 percent slopes, eroded	0.000	0.000	0.000	0.290	0.000	0.290	0.000	0.000	0.000
Steele City	NE	Jefferson	832.931	833.040	0.109	NE095	Crete silt loam, 1 to 3 percent slopes	0.000	0.000	0.000	0.109	0.001	0.108	0.000	0.000	0.000
Steele City	NE	Jefferson	833.040	833.100	0.059	NE095	Crete silty clay loam, 3 to 7 percent slopes, eroded	0.000	0.000	0.000	0.059	0.000	0.059	0.000	0.000	0.000
Steele City	NE	Jefferson	833.100	833.244	0.145	NE095	Crete silt loam, 1 to 3 percent slopes	0.000	0.000	0.000	0.145	0.001	0.143	0.000	0.000	0.000
Steele City	NE	Jefferson	833.244	833.378	0.134	NE095	Crete silty clay loam, 3 to 7 percent slopes, eroded	0.000	0.000	0.000	0.134	0.000	0.134	0.000	0.000	0.000
Steele City	NE	Jefferson	833.378	833.425	0.048	NE095	Morrill clay loam, 3 to 7 percent slopes, eroded	0.000	0.000	0.000	0.048	0.000	0.048	0.048	0.000	0.000
Steele City	NE	Jefferson	833.425	833.472	0.047	NE095	Morrill soils, 3 to 11 percent slopes, severely eroded	0.000	0.047	0.000	0.000	0.000	0.047	0.047	0.000	0.000
Steele City	NE	Jefferson	833.472	833.502	0.030	NE095	Judson silt loam, 2 to 5 percent slopes	0.000	0.000	0.000	0.030	0.000	0.030	0.000	0.000	0.000
Steele City	NE	Jefferson	833.502	833.764	0.262	NE095	Kennebec silt loam, rarely flooded, cool	0.000	0.000	0.000	0.262	0.000	0.262	0.000	0.000	0.000
Steele City	NE	Jefferson	833.764	833.779	0.015	NE095	Nodaway silt loam, occasionally flooded	0.000	0.000	0.000	0.015	0.000	0.015	0.000	0.000	0.000
Steele City	NE	Jefferson	833.779	833.798	0.019	NE095	Nodaway silt loam, channeled, occasionally flooded	0.000	0.000	0.000	0.000	0.000	0.019	0.000	0.000	0.000

Appendix K – Soils by Milepost – Steele City Segment

Pipeline Segment	State	County	Beginning Milepost	Ending Milepost	Miles	Soil Series	Soil Series Name	Wind (miles)	Water (miles)	Low revegetation on Potential (miles)	Prime Farmland (miles)	Hydric Soils (miles)	Compaction on Prone (miles)	Stoney – Rocky (miles)	Shallow Bedrock (miles)	Droghty (miles)
Steele City	NE	Jefferson	833.798	833.813	0.015	NE095	Nodaway silt loam, occasionally flooded	0.000	0.000	0.000	0.015	0.000	0.015	0.000	0.000	0.000
Steele City	NE	Jefferson	833.813	833.863	0.050	NE095	Kennebec silt loam, rarely flooded, cool	0.000	0.000	0.000	0.050	0.000	0.050	0.000	0.000	0.000
Steele City	NE	Jefferson	833.863	834.026	0.163	NE095	Malcolm silt loam, 7 to 11 percent slopes, eroded	0.000	0.163	0.000	0.000	0.000	0.163	0.000	0.000	0.000
Steele City	NE	Jefferson	834.026	834.068	0.043	NE095	Burchard clay loam, 3 to 7 percent slopes	0.000	0.000	0.000	0.043	0.000	0.043	0.000	0.000	0.000
Steele City	NE	Jefferson	834.068	834.119	0.050	NE095	Mayberry silty clay loam, 3 to 7 percent slopes, eroded	0.000	0.000	0.000	0.050	0.000	0.050	0.000	0.000	0.000
Steele City	NE	Jefferson	834.119	834.165	0.046	NE095	Crete silty clay loam, 3 to 7 percent slopes, eroded	0.000	0.000	0.000	0.046	0.000	0.046	0.000	0.000	0.000
Steele City	NE	Jefferson	834.165	834.210	0.046	NE095	Mayberry silty clay loam, 3 to 7 percent slopes, eroded	0.000	0.000	0.000	0.046	0.000	0.046	0.000	0.000	0.000
Steele City	NE	Jefferson	834.210	834.414	0.203	NE095	Crete silty clay loam, 3 to 7 percent slopes, eroded	0.000	0.000	0.000	0.203	0.000	0.203	0.000	0.000	0.000
Steele City	NE	Jefferson	834.414	834.476	0.063	NE095	Morrill soils, 3 to 11 percent slopes, severely eroded	0.000	0.063	0.000	0.000	0.000	0.063	0.063	0.000	0.000
Steele City	NE	Jefferson	834.476	834.532	0.056	NE095	Judson silt loam, 2 to 5 percent slopes	0.000	0.000	0.000	0.056	0.000	0.056	0.000	0.000	0.000
Steele City	NE	Jefferson	834.532	834.664	0.131	NE095	Morrill soils, 3 to 11 percent slopes, severely eroded	0.000	0.131	0.000	0.000	0.000	0.131	0.131	0.000	0.000
Steele City	NE	Jefferson	834.664	834.709	0.046	NE095	Crete silty clay loam, 3 to 7 percent slopes, eroded	0.000	0.000	0.000	0.046	0.000	0.046	0.000	0.000	0.000
Steele City	NE	Jefferson	834.709	834.784	0.074	NE095	Mayberry silty clay loam, 3 to 7 percent slopes, eroded	0.000	0.000	0.000	0.074	0.000	0.074	0.000	0.000	0.000
Steele City	NE	Jefferson	834.784	834.996	0.212	NE095	Nodaway silt loam, occasionally flooded	0.000	0.000	0.000	0.212	0.004	0.212	0.000	0.000	0.000
Steele City	NE	Jefferson	834.996	835.001	0.005	NE095	Mayberry silty clay loam, 3 to 7 percent slopes, eroded	0.000	0.000	0.000	0.005	0.000	0.005	0.000	0.000	0.000
Steele City	NE	Jefferson	835.001	835.129	0.128	NE095	Burchard clay loam, 3 to 7 percent slopes	0.000	0.000	0.000	0.128	0.000	0.128	0.000	0.000	0.000
Steele City	NE	Jefferson	835.129	835.414	0.285	NE095	Nodaway silt loam, occasionally flooded	0.000	0.000	0.000	0.285	0.006	0.285	0.000	0.000	0.000
Steele City	NE	Jefferson	835.414	835.476	0.062	NE095	Nodaway silt loam, channeled, occasionally flooded	0.000	0.000	0.000	0.000	0.001	0.062	0.000	0.000	0.000
Steele City	NE	Jefferson	835.476	835.512	0.037	NE095	Malcolm silt loam, 7 to 11 percent slopes, eroded	0.000	0.037	0.000	0.000	0.000	0.037	0.000	0.000	0.000
Steele City	NE	Jefferson	835.512	835.587	0.074	NE095	Mayberry silty clay loam, 3 to 7 percent slopes, eroded	0.000	0.000	0.000	0.074	0.000	0.074	0.000	0.000	0.000
Steele City	NE	Jefferson	835.587	835.623	0.037	NE095	Crete silty clay loam, 3 to 7 percent slopes, eroded	0.000	0.000	0.000	0.037	0.000	0.037	0.000	0.000	0.000
Steele City	NE	Jefferson	835.623	835.667	0.043	NE095	Crete silt loam, 1 to 3 percent slopes	0.000	0.000	0.000	0.043	0.000	0.043	0.000	0.000	0.000
Steele City	NE	Jefferson	835.667	835.696	0.029	NE095	Crete silty clay loam, 3 to 7 percent slopes, eroded	0.000	0.000	0.000	0.029	0.000	0.029	0.000	0.000	0.000
Steele City	NE	Jefferson	835.696	835.829	0.133	NE095	Mayberry silty clay loam, 3 to 7 percent slopes, eroded	0.000	0.000	0.000	0.133	0.000	0.133	0.000	0.000	0.000
Steele City	NE	Jefferson	835.829	835.864	0.035	NE095	Burchard clay loam, 7 to 11 percent slopes, severely eroded	0.000	0.035	0.000	0.035	0.000	0.035	0.000	0.000	0.000
Steele City	NE	Jefferson	835.864	835.874	0.010	NE095	Nodaway silt loam, occasionally flooded	0.000	0.000	0.000	0.010	0.000	0.010	0.000	0.000	0.000
Steele City	NE	Jefferson	835.874	835.949	0.075	NE095	Nodaway silt loam, channeled, occasionally flooded	0.000	0.000	0.000	0.000	0.002	0.075	0.000	0.000	0.000
Steele City	NE	Jefferson	835.949	835.969	0.020	NE095	Nodaway silt loam, occasionally flooded	0.000	0.000	0.000	0.020	0.000	0.020	0.000	0.000	0.000
Steele City	NE	Jefferson	835.969	836.006	0.037	NE095	Burchard clay loam, 7 to 11 percent slopes, severely eroded	0.000	0.037	0.000	0.037	0.000	0.037	0.000	0.000	0.000
Steele City	NE	Jefferson	836.006	836.106	0.099	NE095	Mayberry silty clay loam, 3 to 7 percent slopes, eroded	0.000	0.000	0.000	0.099	0.000	0.099	0.000	0.000	0.000
Steele City	NE	Jefferson	836.106	836.206	0.100	NE095	Burchard clay loam, 7 to 11 percent slopes, severely eroded	0.000	0.100	0.000	0.100	0.000	0.100	0.000	0.000	0.000
Steele City	NE	Jefferson	836.206	836.220	0.014	NE095	Mayberry silty clay loam, 3 to 7 percent slopes, eroded	0.000	0.000	0.000	0.014	0.000	0.014	0.000	0.000	0.000
Steele City	NE	Jefferson	836.220	836.281	0.061	NE095	Burchard clay loam, 7 to 11 percent slopes, severely eroded	0.000	0.061	0.000	0.061	0.000	0.061	0.000	0.000	0.000

Appendix K – Soils by Milepost – Steele City Segment

Pipeline Segment	State	County	Beginning Milepost	Ending Milepost	Miles	Soil Series	Soil Series Name	Wind (miles)	Water (miles)	Low revegetation on Potential (miles)	Prime Farmland (miles)	Hydric Soils (miles)	Compaction on Prone (miles)	Stoney – Rocky (miles)	Shallow Bedrock (miles)	Droghty (miles)
Steele City	NE	Jefferson	836.281	836.324	0.044	NE095	Mayberry silty clay loam, 3 to 7 percent slopes, eroded	0.000	0.000	0.000	0.044	0.000	0.044	0.000	0.000	0.000
Steele City	NE	Jefferson	836.324	836.549	0.225	NE095	Burchard clay loam, 7 to 11 percent slopes, severely eroded	0.000	0.225	0.000	0.225	0.000	0.225	0.000	0.000	0.000
Steele City	NE	Jefferson	836.549	836.621	0.072	NE095	Crete silty clay loam, 3 to 7 percent slopes, eroded	0.000	0.000	0.000	0.072	0.000	0.072	0.000	0.000	0.000
Steele City	NE	Jefferson	836.621	836.746	0.125	NE095	Crete silt loam, 1 to 3 percent slopes	0.000	0.000	0.000	0.125	0.001	0.124	0.000	0.000	0.000
Steele City	NE	Jefferson	836.746	836.850	0.104	NE095	Crete silty clay loam, 3 to 7 percent slopes, eroded	0.000	0.000	0.000	0.104	0.000	0.104	0.000	0.000	0.000
Steele City	NE	Jefferson	836.850	836.983	0.133	NE095	Crete silt loam, 0 to 1 percent slopes	0.000	0.000	0.000	0.133	0.000	0.133	0.000	0.000	0.000
Steele City	NE	Jefferson	836.983	837.037	0.054	NE095	Butler silt loam	0.000	0.000	0.000	0.054	0.001	0.053	0.000	0.000	0.000
Steele City	NE	Jefferson	837.037	837.086	0.050	NE095	Crete silt loam, 1 to 3 percent slopes	0.000	0.000	0.000	0.050	0.000	0.049	0.000	0.000	0.000
Steele City	NE	Jefferson	837.086	837.153	0.067	NE095	Burchard clay loam, 11 to 30 percent slopes	0.000	0.067	0.000	0.000	0.000	0.067	0.000	0.000	0.000
Steele City	NE	Jefferson	837.153	837.206	0.053	NE095	Crete silt loam, 0 to 1 percent slopes	0.000	0.000	0.000	0.053	0.000	0.053	0.000	0.000	0.000
Steele City	NE	Jefferson	837.206	837.326	0.119	NE095	Burchard clay loam, 11 to 30 percent slopes	0.000	0.119	0.000	0.000	0.000	0.119	0.000	0.000	0.000
Steele City	NE	Jefferson	837.326	837.383	0.057	NE095	Crete silty clay loam, 3 to 7 percent slopes, eroded	0.000	0.000	0.000	0.057	0.000	0.057	0.000	0.000	0.000
Steele City	NE	Jefferson	837.383	837.501	0.118	NE095	Crete silt loam, 1 to 3 percent slopes	0.000	0.000	0.000	0.118	0.001	0.117	0.000	0.000	0.000
Steele City	NE	Jefferson	837.501	837.776	0.275	NE095	Crete silt loam, 0 to 1 percent slopes	0.000	0.000	0.000	0.275	0.000	0.275	0.000	0.000	0.000
Steele City	NE	Jefferson	837.776	837.869	0.093	NE095	Crete silt loam, 1 to 3 percent slopes	0.000	0.000	0.000	0.093	0.001	0.092	0.000	0.000	0.000
Steele City	NE	Jefferson	837.869	838.271	0.402	NE095	Crete silt loam, 0 to 1 percent slopes	0.000	0.000	0.000	0.402	0.000	0.402	0.000	0.000	0.000
Steele City	NE	Jefferson	838.271	838.338	0.067	NE095	Crete silt loam, 1 to 3 percent slopes	0.000	0.000	0.000	0.067	0.001	0.067	0.000	0.000	0.000
Steele City	NE	Jefferson	838.338	838.454	0.116	NE095	Crete silt loam, 0 to 1 percent slopes	0.000	0.000	0.000	0.116	0.000	0.116	0.000	0.000	0.000
Steele City	NE	Jefferson	838.454	838.515	0.062	NE095	Crete silty clay loam, 3 to 7 percent slopes, eroded	0.000	0.000	0.000	0.062	0.000	0.062	0.000	0.000	0.000
Steele City	NE	Jefferson	838.515	838.718	0.203	NE095	Crete silt loam, 0 to 1 percent slopes	0.000	0.000	0.000	0.203	0.000	0.203	0.000	0.000	0.000
Steele City	NE	Jefferson	838.718	838.852	0.133	NE095	Crete silty clay loam, 3 to 7 percent slopes, eroded	0.000	0.000	0.000	0.133	0.000	0.133	0.000	0.000	0.000
Steele City	NE	Jefferson	838.852	838.885	0.034	NE095	Crete silt loam, 1 to 3 percent slopes	0.000	0.000	0.000	0.034	0.000	0.033	0.000	0.000	0.000
Steele City	NE	Jefferson	838.885	838.964	0.078	NE095	Crete silt loam, 0 to 1 percent slopes	0.000	0.000	0.000	0.078	0.000	0.078	0.000	0.000	0.000
Steele City	NE	Jefferson	838.964	839.046	0.082	NE095	Crete silt loam, 1 to 3 percent slopes	0.000	0.000	0.000	0.082	0.001	0.081	0.000	0.000	0.000
Steele City	NE	Jefferson	839.046	839.128	0.082	NE095	Burchard clay loam, 7 to 11 percent slopes	0.000	0.082	0.000	0.082	0.000	0.082	0.000	0.000	0.000
Steele City	NE	Jefferson	839.128	839.256	0.128	NE095	Crete silty clay loam, 3 to 7 percent slopes, eroded	0.000	0.000	0.000	0.128	0.000	0.128	0.000	0.000	0.000
Steele City	NE	Jefferson	839.256	839.309	0.053	NE095	Mayberry silty clay loam, 3 to 7 percent slopes, eroded	0.000	0.000	0.000	0.053	0.000	0.053	0.000	0.000	0.000
Steele City	NE	Jefferson	839.309	839.439	0.130	NE095	Crete silty clay loam, 3 to 7 percent slopes, eroded	0.000	0.000	0.000	0.130	0.000	0.130	0.000	0.000	0.000
Steele City	NE	Jefferson	839.439	839.544	0.105	NE095	Mayberry silty clay loam, 3 to 7 percent slopes, eroded	0.000	0.000	0.000	0.105	0.000	0.105	0.000	0.000	0.000
Steele City	NE	Jefferson	839.544	839.599	0.055	NE095	Crete silty clay loam, 3 to 7 percent slopes, eroded	0.000	0.000	0.000	0.055	0.000	0.055	0.000	0.000	0.000
Steele City	NE	Jefferson	839.599	839.670	0.070	NE095	Crete silt loam, 1 to 3 percent slopes	0.000	0.000	0.000	0.070	0.001	0.069	0.000	0.000	0.000
Steele City	NE	Jefferson	839.670	839.883	0.213	NE095	Crete silty clay loam, 3 to 7 percent slopes, eroded	0.000	0.000	0.000	0.213	0.000	0.213	0.000	0.000	0.000
Steele City	NE	Jefferson	839.883	839.921	0.038	NE095	Crete silt loam, 1 to 3 percent slopes	0.000	0.000	0.000	0.038	0.000	0.038	0.000	0.000	0.000
Steele City	NE	Jefferson	839.921	840.013	0.092	NE095	Crete silt loam, 0 to 1 percent slopes	0.000	0.000	0.000	0.092	0.000	0.092	0.000	0.000	0.000
Steele City	NE	Jefferson	840.013	840.028	0.015	NE095	Crete silt loam, 1 to 3 percent slopes	0.000	0.000	0.000	0.015	0.000	0.015	0.000	0.000	0.000
Steele City	NE	Jefferson	840.028	840.134	0.105	NE095	Crete silt loam, 0 to 1 percent slopes	0.000	0.000	0.000	0.105	0.000	0.105	0.000	0.000	0.000
Steele City	NE	Jefferson	840.134	840.156	0.022	NE095	Crete silt loam, 1 to 3 percent slopes	0.000	0.000	0.000	0.022	0.000	0.022	0.000	0.000	0.000
Steele City	NE	Jefferson	840.156	840.174	0.018	NE095	Hastings silty clay loam, 3 to 11 percent slopes, severely eroded	0.000	0.018	0.000	0.000	0.000	0.018	0.000	0.000	0.000
Steele City	NE	Jefferson	840.174	840.223	0.049	NE095	Crete silt loam, 1 to 3 percent slopes	0.000	0.000	0.000	0.049	0.000	0.049	0.000	0.000	0.000
Steele City	NE	Jefferson	840.223	840.258	0.035	NE095	Crete silt loam, 0 to 1 percent slopes	0.000	0.000	0.000	0.035	0.000	0.035	0.000	0.000	0.000

Appendix K – Soils by Milepost – Steele City Segment

Pipeline Segment	State	County	Beginning Milepost	Ending Milepost	Miles	Soil Series	Soil Series Name	Wind (miles)	Water (miles)	Low revegetation on Potential (miles)	Prime Farmland (miles)	Hydric Soils (miles)	Compaction on Prone (miles)	Stoney – Rocky (miles)	Shallow Bedrock (miles)	Droghty (miles)
Steele City	NE	Jefferson	840.258	840.303	0.044	NE095	Crete silt loam, 1 to 3 percent slopes	0.000	0.000	0.000	0.044	0.000	0.044	0.000	0.000	0.000
Steele City	NE	Jefferson	840.303	840.345	0.042	NE095	Hastings silty clay loam, 3 to 11 percent slopes, severely eroded	0.000	0.042	0.000	0.000	0.000	0.042	0.000	0.000	0.000
Steele City	NE	Jefferson	840.345	840.448	0.104	NE095	Crete silt loam, 1 to 3 percent slopes	0.000	0.000	0.000	0.104	0.001	0.103	0.000	0.000	0.000
Steele City	NE	Jefferson	840.448	840.528	0.079	NE095	Crete silty clay loam, 3 to 7 percent slopes, eroded	0.000	0.000	0.000	0.079	0.000	0.079	0.000	0.000	0.000
Steele City	NE	Jefferson	840.528	840.595	0.067	NE095	Crete silt loam, 1 to 3 percent slopes	0.000	0.000	0.000	0.067	0.001	0.067	0.000	0.000	0.000
Steele City	NE	Jefferson	840.595	840.708	0.113	NE095	Crete silty clay loam, 3 to 7 percent slopes, eroded	0.000	0.000	0.000	0.113	0.000	0.113	0.000	0.000	0.000
Steele City	NE	Jefferson	840.708	840.921	0.214	NE095	Crete silt loam, 1 to 3 percent slopes	0.000	0.000	0.000	0.214	0.002	0.211	0.000	0.000	0.000
Steele City	NE	Jefferson	840.921	841.012	0.091	NE095	Crete silty clay loam, 3 to 7 percent slopes, eroded	0.000	0.000	0.000	0.091	0.000	0.091	0.000	0.000	0.000
Steele City	NE	Jefferson	841.012	841.202	0.190	NE095	Crete silt loam, 1 to 3 percent slopes	0.000	0.000	0.000	0.190	0.002	0.188	0.000	0.000	0.000
Steele City	NE	Jefferson	841.202	841.419	0.217	NE095	Crete silty clay loam, 3 to 7 percent slopes, eroded	0.000	0.000	0.000	0.217	0.000	0.217	0.000	0.000	0.000
Steele City	NE	Jefferson	841.419	841.488	0.068	NE095	Mayberry silty clay loam, 3 to 7 percent slopes, eroded	0.000	0.000	0.000	0.068	0.000	0.068	0.000	0.000	0.000
Steele City	NE	Jefferson	841.488	841.549	0.061	NE095	Nodaway silt loam, occasionally flooded	0.000	0.000	0.000	0.061	0.001	0.061	0.000	0.000	0.000
Steele City	NE	Jefferson	841.549	841.588	0.040	NE095	Mayberry silty clay loam, 3 to 7 percent slopes, eroded	0.000	0.000	0.000	0.040	0.000	0.040	0.000	0.000	0.000
Steele City	NE	Jefferson	841.588	841.712	0.123	NE095	Malmo clay, 3 to 11 percent slopes, eroded	0.000	0.123	0.000	0.000	0.000	0.123	0.000	0.000	0.000
Steele City	NE	Jefferson	841.712	841.749	0.037	NE095	Hastings silty clay loam, 3 to 11 percent slopes, severely eroded	0.000	0.037	0.000	0.000	0.000	0.037	0.000	0.000	0.000
Steele City	NE	Jefferson	841.749	841.772	0.023	NE095	Crete silty clay loam, 3 to 7 percent slopes, eroded	0.000	0.000	0.000	0.023	0.000	0.023	0.000	0.000	0.000
Steele City	NE	Jefferson	841.772	841.857	0.085	NE095	Crete silt loam, 1 to 3 percent slopes	0.000	0.000	0.000	0.085	0.001	0.084	0.000	0.000	0.000
Steele City	NE	Jefferson	841.857	842.019	0.161	NE095	Crete silty clay loam, 3 to 7 percent slopes, eroded	0.000	0.000	0.000	0.161	0.000	0.161	0.000	0.000	0.000
Steele City	NE	Jefferson	842.019	842.195	0.176	NE095	Morrill clay loam, 11 to 30 percent slopes	0.000	0.176	0.000	0.000	0.000	0.176	0.176	0.000	0.000
Steele City	NE	Jefferson	842.195	842.310	0.115	NE095	Crete silt loam, 1 to 3 percent slopes	0.000	0.000	0.000	0.115	0.001	0.114	0.000	0.000	0.000
Steele City	NE	Jefferson	842.310	842.635	0.325	NE095	Crete silt loam, 0 to 1 percent slopes	0.000	0.000	0.000	0.325	0.000	0.325	0.000	0.000	0.000
Steele City	NE	Jefferson	842.635	842.883	0.249	NE095	Crete silt loam, 1 to 3 percent slopes	0.000	0.000	0.000	0.249	0.002	0.246	0.000	0.000	0.000
Steele City	NE	Jefferson	842.883	843.013	0.130	NE095	Crete silty clay loam, 3 to 7 percent slopes, eroded	0.000	0.000	0.000	0.130	0.000	0.130	0.000	0.000	0.000
Steele City	NE	Jefferson	843.013	843.052	0.039	NE095	Malmo clay, 3 to 11 percent slopes, eroded	0.000	0.039	0.000	0.000	0.000	0.039	0.000	0.000	0.000
Steele City	NE	Jefferson	843.052	843.294	0.243	NE095	Nodaway silt loam, occasionally flooded	0.000	0.000	0.000	0.243	0.005	0.243	0.000	0.000	0.000
Steele City	NE	Jefferson	843.294	843.404	0.110	NE095	Malmo clay, 3 to 11 percent slopes, eroded	0.000	0.110	0.000	0.000	0.000	0.110	0.000	0.000	0.000
Steele City	NE	Jefferson	843.404	843.430	0.025	NE095	Mayberry silty clay loam, 3 to 7 percent slopes, eroded	0.000	0.000	0.000	0.025	0.000	0.025	0.000	0.000	0.000
Steele City	NE	Jefferson	843.430	843.454	0.024	NE095	Malmo clay, 3 to 11 percent slopes, eroded	0.000	0.024	0.000	0.000	0.000	0.024	0.000	0.000	0.000
Steele City	NE	Jefferson	843.454	843.543	0.090	NE095	Nodaway silt loam, occasionally flooded	0.000	0.000	0.000	0.090	0.002	0.090	0.000	0.000	0.000
Steele City	NE	Jefferson	843.543	843.591	0.048	NE095	Mayberry silty clay loam, 3 to 7 percent slopes, eroded	0.000	0.000	0.000	0.048	0.000	0.048	0.000	0.000	0.000
Steele City	NE	Jefferson	843.591	843.798	0.207	NE095	Crete silty clay loam, 3 to 7 percent slopes, eroded	0.000	0.000	0.000	0.207	0.000	0.207	0.000	0.000	0.000
Steele City	NE	Jefferson	843.798	843.867	0.069	NE095	Crete silt loam, 1 to 3 percent slopes	0.000	0.000	0.000	0.069	0.001	0.069	0.000	0.000	0.000
Steele City	NE	Jefferson	843.867	844.472	0.605	NE095	Crete silt loam, 0 to 1 percent slopes	0.000	0.000	0.000	0.605	0.000	0.605	0.000	0.000	0.000
Steele City	NE	Jefferson	844.472	844.523	0.051	NE095	Crete silt loam, 1 to 3 percent slopes	0.000	0.000	0.000	0.051	0.001	0.051	0.000	0.000	0.000
Steele City	NE	Jefferson	844.523	844.740	0.217	NE095	Crete silt loam, 0 to 1 percent slopes	0.000	0.000	0.000	0.217	0.000	0.217	0.000	0.000	0.000
Steele City	NE	Jefferson	844.740	845.008	0.269	NE095	Crete silt loam, 1 to 3 percent slopes	0.000	0.000	0.000	0.269	0.003	0.266	0.000	0.000	0.000
Steele City	NE	Jefferson	845.008	845.117	0.109	NE095	Crete silt loam, 0 to 1 percent slopes	0.000	0.000	0.000	0.109	0.000	0.109	0.000	0.000	0.000
Steele City	NE	Jefferson	845.117	845.171	0.053	NE095	Crete silty clay loam, 3 to 7 percent slopes, eroded	0.000	0.000	0.000	0.053	0.000	0.053	0.000	0.000	0.000
Steele City	NE	Jefferson	845.171	845.226	0.056	NE095	Hastings silty clay loam, 3 to 11 percent slopes,	0.000	0.056	0.000	0.000	0.000	0.056	0.000	0.000	0.000

Appendix K – Soils by Milepost – Steele City Segment

Pipeline Segment	State	County	Beginning Milepost	Ending Milepost	Miles	Soil Series	Soil Series Name	Wind (miles)	Water (miles)	Low revegetation on Potential (miles)	Prime Farmland (miles)	Hydric Soils (miles)	Compaction on Prone (miles)	Stoney – Rocky (miles)	Shallow Bedrock (miles)	Droghty (miles)
							severely eroded									
Steele City	NE	Jefferson	845.226	845.287	0.061	NE095	Crete silty clay loam, 3 to 7 percent slopes, eroded	0.000	0.000	0.000	0.061	0.000	0.061	0.000	0.000	0.000
Steele City	NE	Jefferson	845.287	845.373	0.086	NE095	Crete silt loam, 0 to 1 percent slopes	0.000	0.000	0.000	0.086	0.000	0.086	0.000	0.000	0.000
Steele City	NE	Jefferson	845.373	845.623	0.251	NE095	Crete silty clay loam, 3 to 7 percent slopes, eroded	0.000	0.000	0.000	0.251	0.000	0.251	0.000	0.000	0.000
Steele City	NE	Jefferson	845.623	845.798	0.174	NE095	Nodaway silt loam, occasionally flooded	0.000	0.000	0.000	0.174	0.003	0.174	0.000	0.000	0.000
Steele City	NE	Jefferson	845.798	845.859	0.062	NE095	Nodaway silt loam, channeled, occasionally flooded	0.000	0.000	0.000	0.000	0.001	0.062	0.000	0.000	0.000
Steele City	NE	Jefferson	845.859	845.979	0.119	NE095	Nodaway silt loam, occasionally flooded	0.000	0.000	0.000	0.119	0.002	0.119	0.000	0.000	0.000
Steele City	NE	Jefferson	845.979	846.050	0.071	NE095	Malmo clay, 3 to 11 percent slopes, eroded	0.000	0.071	0.000	0.000	0.000	0.071	0.000	0.000	0.000
Steele City	NE	Jefferson	846.050	846.140	0.090	NE095	Crete silty clay loam, 3 to 7 percent slopes, eroded	0.000	0.000	0.000	0.090	0.000	0.090	0.000	0.000	0.000
Steele City	NE	Jefferson	846.140	846.207	0.067	NE095	Crete silt loam, 1 to 3 percent slopes	0.000	0.000	0.000	0.067	0.001	0.066	0.000	0.000	0.000
Steele City	NE	Jefferson	846.207	846.288	0.081	NE095	Crete silty clay loam, 3 to 7 percent slopes, eroded	0.000	0.000	0.000	0.081	0.000	0.081	0.000	0.000	0.000
Steele City	NE	Jefferson	846.288	846.358	0.070	NE095	Malmo clay, 3 to 11 percent slopes, eroded	0.000	0.070	0.000	0.000	0.000	0.070	0.000	0.000	0.000
Steele City	NE	Jefferson	846.358	846.431	0.073	NE095	Crete silty clay loam, 3 to 7 percent slopes, eroded	0.000	0.000	0.000	0.073	0.000	0.073	0.000	0.000	0.000
Steele City	NE	Jefferson	846.431	846.527	0.096	NE095	Crete silt loam, 1 to 3 percent slopes	0.000	0.000	0.000	0.096	0.001	0.095	0.000	0.000	0.000
Steele City	NE	Jefferson	846.527	846.603	0.076	NE095	Crete silt loam, 0 to 1 percent slopes	0.000	0.000	0.000	0.076	0.000	0.076	0.000	0.000	0.000
Steele City	NE	Jefferson	846.603	846.724	0.121	NE095	Crete silty clay loam, 3 to 7 percent slopes, eroded	0.000	0.000	0.000	0.121	0.000	0.121	0.000	0.000	0.000
Steele City	NE	Jefferson	846.724	846.804	0.080	NE095	Crete silt loam, 1 to 3 percent slopes	0.000	0.000	0.000	0.080	0.001	0.079	0.000	0.000	0.000
Steele City	NE	Jefferson	846.804	846.856	0.052	NE095	Crete silty clay loam, 3 to 7 percent slopes, eroded	0.000	0.000	0.000	0.052	0.000	0.052	0.000	0.000	0.000
Steele City	NE	Jefferson	846.856	847.020	0.163	NE095	Morrill clay loam, 11 to 30 percent slopes	0.000	0.163	0.000	0.000	0.000	0.163	0.163	0.000	0.000
Steele City	NE	Jefferson	847.020	847.109	0.089	NE095	Crete silty clay loam, 3 to 7 percent slopes, eroded	0.000	0.000	0.000	0.089	0.000	0.089	0.000	0.000	0.000
Steele City	NE	Jefferson	847.109	847.180	0.071	NE095	Morrill clay loam, 11 to 30 percent slopes	0.000	0.071	0.000	0.000	0.000	0.071	0.071	0.000	0.000
Steele City	NE	Jefferson	847.180	847.397	0.217	NE095	Crete silty clay loam, 3 to 7 percent slopes, eroded	0.000	0.000	0.000	0.217	0.000	0.217	0.000	0.000	0.000
Steele City	NE	Jefferson	847.397	847.470	0.073	NE095	Hastings silty clay loam, 3 to 11 percent slopes, severely eroded	0.000	0.073	0.000	0.000	0.000	0.073	0.000	0.000	0.000
Steele City	NE	Jefferson	847.470	847.538	0.067	NE095	Crete silty clay loam, 3 to 7 percent slopes, eroded	0.000	0.000	0.000	0.067	0.000	0.067	0.000	0.000	0.000
Steele City	NE	Jefferson	847.538	847.663	0.125	NE095	Crete silt loam, 1 to 3 percent slopes	0.000	0.000	0.000	0.125	0.001	0.124	0.000	0.000	0.000
Steele City	NE	Jefferson	847.663	848.017	0.354	NE095	Crete silt loam, 0 to 1 percent slopes	0.000	0.000	0.000	0.354	0.000	0.354	0.000	0.000	0.000
Steele City	NE	Jefferson	848.017	848.135	0.118	NE095	Crete silty clay loam, 3 to 7 percent slopes, eroded	0.000	0.000	0.000	0.118	0.000	0.118	0.000	0.000	0.000
Steele City	NE	Jefferson	848.135	848.180	0.045	NE095	Mayberry silty clay loam, 3 to 7 percent slopes, eroded	0.000	0.000	0.000	0.045	0.000	0.045	0.000	0.000	0.000
Steele City	NE	Jefferson	848.180	848.191	0.010	NE095	Rough stony land	0.000	0.010	0.000	0.000	0.000	0.000	0.010	0.010	0.000
Steele City	NE	Jefferson	848.191	848.277	0.086	NE095	Mayberry silty clay loam, 3 to 7 percent slopes, eroded	0.000	0.000	0.000	0.086	0.000	0.086	0.000	0.000	0.000
Steele City	NE	Jefferson	848.277	848.376	0.100	NE095	Rough stony land	0.000	0.100	0.000	0.000	0.000	0.000	0.100	0.100	0.000
Steele City	NE	Jefferson	848.376	848.566	0.190	NE095	Mayberry silty clay loam, 7 to 11 percent slopes	0.000	0.190	0.000	0.000	0.000	0.190	0.000	0.000	0.000
Steele City	NE	Jefferson	848.566	848.697	0.131	NE095	Lancaster and Edalgo soils, 11 to 30 percent slopes	0.000	0.131	0.000	0.000	0.000	0.131	0.000	0.000	0.000
Steele City	NE	Jefferson	848.697	848.728	0.031	NE095	Edalgo silty clay loam, 7 to 11 percent slopes	0.000	0.031	0.000	0.000	0.000	0.031	0.000	0.000	0.000
Steele City	NE	Jefferson	848.728	848.754	0.026	NE095	Lancaster and Edalgo soils, 11 to 30 percent slopes	0.000	0.026	0.000	0.000	0.000	0.026	0.000	0.000	0.000
Steele City	NE	Jefferson	848.754	848.883	0.129	NE095	Rough stony land	0.000	0.129	0.000	0.000	0.000	0.000	0.129	0.129	0.000
Steele City	NE	Jefferson	848.883	848.939	0.056	NE095	Edalgo silty clay loam, 7 to 11 percent slopes	0.000	0.056	0.000	0.000	0.000	0.056	0.000	0.000	0.000
Steele City	NE	Jefferson	848.939	848.957	0.018	NE095	Lancaster and Edalgo soils, 11 to 30 percent slopes	0.000	0.018	0.000	0.000	0.000	0.018	0.000	0.000	0.000
Steele City	NE	Jefferson	848.957	849.038	0.081	NE095	Rough stony land	0.000	0.081	0.000	0.000	0.000	0.000	0.081	0.081	0.000
Steele City	NE	Jefferson	849.038	849.151	0.113	NE095	Lancaster and Edalgo soils, 11 to 30 percent slopes	0.000	0.113	0.000	0.000	0.000	0.113	0.000	0.000	0.000
Steele City	NE	Jefferson	849.151	849.256	0.106	NE095	Lancaster loam, 7 to 11 percent slopes	0.000	0.106	0.000	0.000	0.000	0.106	0.000	0.000	0.000
Steele City	NE	Jefferson	849.256	849.747	0.491	NE095	Crete silty clay loam, 3 to 7 percent slopes, eroded	0.000	0.000	0.000	0.491	0.000	0.491	0.000	0.000	0.000

Appendix K – Soils by Milepost – Steele City Segment

Pipeline Segment	State	County	Beginning Milepost	Ending Milepost	Miles	Soil Series	Soil Series Name	Wind (miles)	Water (miles)	Low revegetation on Potential (miles)	Prime Farmland (miles)	Hydric Soils (miles)	Compaction on Prone (miles)	Stoney – Rocky (miles)	Shallow Bedrock (miles)	Droghty (miles)
Steele City	NE	Jefferson	849.747	849.821	0.074	NE095	Geary and Jansen soils, 5 to 11 percent slopes, severely eroded	0.000	0.074	0.000	0.000	0.000	0.074	0.037	0.000	0.037
Steele City	NE	Jefferson	849.821	850.077	0.255	NE095	Geary and Jansen soils, 5 to 11 percent slopes	0.000	0.255	0.000	0.000	0.000	0.255	0.128	0.000	0.128
Steele City	NE	Jefferson	850.077	850.186	0.110	NE095	Crete silty clay loam, 3 to 7 percent slopes, eroded	0.000	0.000	0.000	0.110	0.000	0.110	0.000	0.000	0.000
Steele City	NE	Jefferson	850.186	850.213	0.027	NE095	Geary and Jansen soils, 5 to 11 percent slopes	0.000	0.027	0.000	0.000	0.000	0.027	0.013	0.000	0.013
Steele City	NE	Jefferson	850.213	850.258	0.045	NE095	Crete silty clay loam, 3 to 7 percent slopes, eroded	0.000	0.000	0.000	0.045	0.000	0.045	0.000	0.000	0.000

Appendix K – Soils by Milepost – Gulf Coast Section

Pipeline Segment		County	Beginning Milepost	Ending Milepost	Miles	Soil Series	Soil Series Name	Wind (miles)	water (miles)	Low revegetation potential (miles)	Prime Farmland (miles)	Hydric (miles)	Compaction Prone (miles)	Stony-Rocky (miles)	Shallow Bedrock (miles)	Droughty (miles)
Gulf Coast	OK	Payne	0.000	0.007	0.007	OK119	Seminole loam, 3 to 5 percent slopes, eroded	0.000	0.000	0.006	0.000	0.000	0.007	0.000	0.000	0.000
Gulf Coast	OK	Payne	0.007	0.150	0.143	OK119	Agra-Urban land complex, 1 to 5 percent slopes	0.000	0.000	0.007	0.000	0.003	0.143	0.007	0.000	0.000
Gulf Coast	OK	Payne	0.150	0.204	0.053	OK119	Seminole loam, 3 to 5 percent slopes, eroded	0.000	0.000	0.045	0.000	0.001	0.053	0.000	0.000	0.000
Gulf Coast	OK	Payne	0.204	0.207	0.004	OK119	Doolin silt loam, 1 to 3 percent slopes	0.000	0.000	0.003	0.000	0.000	0.004	0.000	0.000	0.000
Gulf Coast	OK	Lincoln	0.207	0.395	0.187	OK081	Kirkland silt loam, 0 to 1 percent slopes	0.000	0.000	0.169	0.187	0.004	0.187	0.009	0.000	0.000
Gulf Coast	OK	Lincoln	0.395	1.065	0.670	OK081	Seminole loam, 3 to 5 percent slopes, eroded	0.000	0.000	0.630	0.000	0.013	0.670	0.013	0.000	0.000
Gulf Coast	OK	Lincoln	1.065	1.136	0.071	OK081	Masham-Lucien complex, 5 to 20 percent slopes	0.000	0.068	0.000	0.000	0.001	0.071	0.021	0.000	0.000
Gulf Coast	OK	Lincoln	1.136	1.318	0.183	OK081	Seminole loam, 3 to 5 percent slopes, eroded	0.000	0.000	0.172	0.000	0.004	0.183	0.004	0.000	0.000
Gulf Coast	OK	Lincoln	1.318	1.383	0.065	OK081	Seminole loam, 3 to 5 percent slopes	0.000	0.000	0.061	0.000	0.001	0.065	0.000	0.000	0.000
Gulf Coast	OK	Lincoln	1.383	1.543	0.161	OK081	Coyle and Seminole soils, 3 to 5 percent slopes, severely eroded	0.000	0.000	0.048	0.000	0.003	0.161	0.096	0.000	0.000
Gulf Coast	OK	Lincoln	1.543	1.807	0.263	OK081	Seminole loam, 3 to 5 percent slopes	0.000	0.000	0.250	0.000	0.005	0.263	0.000	0.000	0.000
Gulf Coast	OK	Lincoln	1.807	2.115	0.308	OK081	Easpur loam, 0 to 1 percent slopes, occasionally flooded	0.000	0.000	0.000	0.308	0.006	0.308	0.000	0.000	0.000
Gulf Coast	OK	Lincoln	2.115	2.204	0.089	OK081	Ashport, Port, and Pulaski soils, 0 to 1 percent slopes, frequently flooded	0.000	0.000	0.000	0.000	0.002	0.089	0.000	0.000	0.000
Gulf Coast	OK	Lincoln	2.204	2.292	0.087	OK081	Easpur loam, 0 to 1 percent slopes, occasionally flooded	0.000	0.000	0.000	0.087	0.002	0.087	0.000	0.000	0.000
Gulf Coast	OK	Lincoln	2.292	2.647	0.356	OK081	Masham-Lucien complex, 5 to 20 percent slopes	0.000	0.338	0.000	0.000	0.007	0.356	0.107	0.000	0.000
Gulf Coast	OK	Lincoln	2.647	2.694	0.047	OK081	Coyle and Seminole soils, 3 to 5 percent slopes, severely eroded	0.000	0.000	0.014	0.000	0.001	0.047	0.028	0.000	0.000
Gulf Coast	OK	Lincoln	2.694	2.766	0.073	OK081	Renthin silty clay loam, 3 to 5 percent slopes, eroded	0.000	0.000	0.004	0.000	0.001	0.073	0.065	0.000	0.000
Gulf Coast	OK	Lincoln	2.766	3.037	0.271	OK081	Coyle and Seminole soils, 3 to 5 percent slopes, severely eroded	0.000	0.000	0.081	0.000	0.005	0.271	0.163	0.000	0.000
Gulf Coast	OK	Lincoln	3.037	3.254	0.217	OK081	Zaneis loam, 3 to 5 percent slopes	0.000	0.000	0.000	0.217	0.004	0.217	0.206	0.000	0.000
Gulf Coast	OK	Lincoln	3.254	3.351	0.098	OK081	Lawrie silt loam, 0 to 1 percent slopes, rarely flooded	0.000	0.000	0.000	0.098	0.002	0.098	0.000	0.000	0.000
Gulf Coast	OK	Lincoln	3.351	3.407	0.056	OK081	Ashport, Port, and Pulaski soils, 0 to 1 percent slopes, frequently flooded	0.000	0.000	0.000	0.000	0.001	0.056	0.000	0.000	0.000
Gulf	OK	Lincoln	3.407	3.472	0.064	OK081	Darsil-Stephenville complex, 5 to 12 percent slopes	0.039	0.026	0.000	0.000	0.001	0.064	0.021	0.000	0.061

Appendix K – Soils by Milepost – Gulf Coast Section

Pipeline Segment		County	Beginning Milepost	Ending Milepost	Miles	Soil Series	Soil Series Name	Wind (miles)	water (miles)	Low revegetation potential (miles)	Prime Farmland (miles)	Hydric (miles)	Compaction Prone (miles)	Stony-Rocky (miles)	Shallow Bedrock (miles)	Droughty (miles)
Coast																
Gulf Coast	OK	Lincoln	3.472	3.557	0.086	OK081	Stephenville fine sandy loam, 3 to 5 percent slopes	0.004	0.000	0.000	0.086	0.002	0.086	0.077	0.000	0.086
Gulf Coast	OK	Lincoln	3.557	3.665	0.107	OK081	Coyle and Seminole soils, 3 to 5 percent slopes, severely eroded	0.000	0.000	0.032	0.000	0.002	0.107	0.064	0.000	0.000
Gulf Coast	OK	Lincoln	3.665	3.797	0.133	OK081	Seminole loam, 1 to 3 percent slopes	0.000	0.000	0.126	0.000	0.003	0.133	0.000	0.000	0.000
Gulf Coast	OK	Lincoln	3.797	3.842	0.045	OK081	Seminole loam, 3 to 5 percent slopes, eroded	0.000	0.000	0.042	0.000	0.001	0.045	0.001	0.000	0.000
Gulf Coast	OK	Lincoln	3.842	3.962	0.120	OK081	Coyle and Seminole soils, 3 to 5 percent slopes, severely eroded	0.000	0.000	0.036	0.000	0.002	0.120	0.072	0.000	0.000
Gulf Coast	OK	Lincoln	3.962	4.067	0.105	OK081	Masham-Lucien complex, 5 to 20 percent slopes	0.000	0.100	0.000	0.000	0.002	0.105	0.032	0.000	0.000
Gulf Coast	OK	Lincoln	4.067	4.137	0.070	OK081	Lawrie silt loam, 0 to 1 percent slopes, rarely flooded	0.000	0.000	0.000	0.070	0.001	0.070	0.000	0.000	0.000
Gulf Coast	OK	Lincoln	4.137	4.185	0.048	OK081	Ashport, Port, and Pulaski soils, 0 to 1 percent slopes, frequently flooded	0.000	0.000	0.000	0.000	0.001	0.048	0.000	0.000	0.000
Gulf Coast	OK	Lincoln	4.185	4.205	0.019	OK081	Lawrie silt loam, 0 to 1 percent slopes, rarely flooded	0.000	0.000	0.000	0.019	0.000	0.019	0.000	0.000	0.000
Gulf Coast	OK	Lincoln	4.205	4.255	0.051	OK081	Ashport, Port, and Pulaski soils, 0 to 1 percent slopes, frequently flooded	0.000	0.000	0.000	0.000	0.001	0.051	0.000	0.000	0.000
Gulf Coast	OK	Lincoln	4.255	4.397	0.142	OK081	Lawrie silt loam, 0 to 1 percent slopes, rarely flooded	0.000	0.000	0.000	0.142	0.003	0.142	0.000	0.000	0.000
Gulf Coast	OK	Lincoln	4.397	4.503	0.106	OK081	Seminole loam, 3 to 5 percent slopes	0.000	0.000	0.100	0.000	0.002	0.106	0.000	0.000	0.000
Gulf Coast	OK	Lincoln	4.503	4.553	0.050	OK081	Coyle and Seminole soils, 3 to 5 percent slopes, severely eroded	0.000	0.000	0.015	0.000	0.001	0.050	0.030	0.000	0.000
Gulf Coast	OK	Lincoln	4.553	4.724	0.171	OK081	Masham-Lucien complex, 5 to 20 percent slopes	0.000	0.162	0.000	0.000	0.003	0.171	0.051	0.000	0.000
Gulf Coast	OK	Lincoln	4.724	4.902	0.179	OK081	Coyle loam, 3 to 5 percent slopes	0.000	0.000	0.000	0.179	0.004	0.179	0.179	0.000	0.000
Gulf Coast	OK	Lincoln	4.902	5.300	0.398	OK081	Masham-Lucien complex, 5 to 20 percent slopes	0.000	0.378	0.000	0.000	0.008	0.398	0.119	0.000	0.000
Gulf Coast	OK	Lincoln	5.300	5.393	0.093	OK081	Darsil-Stephenville complex, 5 to 12 percent slopes	0.056	0.037	0.000	0.000	0.002	0.093	0.031	0.000	0.088
Gulf Coast	OK	Lincoln	5.393	5.827	0.434	OK081	Masham-Lucien complex, 5 to 20 percent slopes	0.000	0.412	0.000	0.000	0.009	0.434	0.130	0.000	0.000
Gulf Coast	OK	Lincoln	5.827	5.895	0.068	OK081	Darsil-Stephenville complex, 5 to 12 percent slopes	0.041	0.027	0.000	0.000	0.001	0.068	0.022	0.000	0.065
Gulf Coast	OK	Lincoln	5.895	6.126	0.232	OK081	Coyle and Seminole soils, 3 to 5 percent slopes, severely eroded	0.000	0.000	0.070	0.000	0.005	0.232	0.139	0.000	0.000
Gulf Coast	OK	Lincoln	6.126	6.214	0.087	OK081	Seminole loam, 3 to 5 percent slopes	0.000	0.000	0.083	0.000	0.002	0.087	0.000	0.000	0.000
Gulf	OK	Lincoln	6.214	6.258	0.044	OK081	Masham-Lucien complex, 5 to 20 percent slopes	0.000	0.042	0.000	0.000	0.001	0.044	0.013	0.000	0.000

Appendix K – Soils by Milepost – Gulf Coast Section

Pipeline Segment		County	Beginning Milepost	Ending Milepost	Miles	Soil Series	Soil Series Name	Wind (miles)	water (miles)	Low revegetation potential (miles)	Prime Farmland (miles)	Hydric (miles)	Compaction Prone (miles)	Stony-Rocky (miles)	Shallow Bedrock (miles)	Droughty (miles)
Coast																
Gulf Coast	OK	Lincoln	6.258	6.411	0.153	OK081	Seminole loam, 3 to 5 percent slopes	0.000	0.000	0.145	0.000	0.003	0.153	0.000	0.000	0.000
Gulf Coast	OK	Lincoln	6.411	6.525	0.114	OK081	Masham-Lucien complex, 5 to 20 percent slopes	0.000	0.108	0.000	0.000	0.002	0.114	0.034	0.000	0.000
Gulf Coast	OK	Lincoln	6.525	6.580	0.055	OK081	Seminole loam, 3 to 5 percent slopes	0.000	0.000	0.052	0.000	0.001	0.055	0.000	0.000	0.000
Gulf Coast	OK	Lincoln	6.580	6.618	0.038	OK081	Masham-Lucien complex, 5 to 20 percent slopes	0.000	0.036	0.000	0.000	0.001	0.038	0.011	0.000	0.000
Gulf Coast	OK	Lincoln	6.618	6.675	0.056	OK081	Seminole loam, 3 to 5 percent slopes	0.000	0.000	0.054	0.000	0.001	0.056	0.000	0.000	0.000
Gulf Coast	OK	Lincoln	6.675	6.961	0.287	OK081	Seminole loam, 3 to 5 percent slopes, eroded	0.000	0.000	0.269	0.000	0.006	0.287	0.006	0.000	0.000
Gulf Coast	OK	Lincoln	6.961	7.245	0.284	OK081	Coyle and Seminole soils, 3 to 5 percent slopes, severely eroded	0.000	0.000	0.085	0.000	0.006	0.284	0.170	0.000	0.000
Gulf Coast	OK	Lincoln	7.245	7.297	0.052	OK081	Masham-Lucien complex, 5 to 20 percent slopes	0.000	0.049	0.000	0.000	0.001	0.052	0.016	0.000	0.000
Gulf Coast	OK	Lincoln	7.297	7.486	0.189	OK081	Coyle and Seminole soils, 3 to 5 percent slopes, severely eroded	0.000	0.000	0.057	0.000	0.004	0.189	0.113	0.000	0.000
Gulf Coast	OK	Lincoln	7.486	7.631	0.145	OK081	Seminole loam, 3 to 5 percent slopes	0.000	0.000	0.138	0.000	0.003	0.145	0.000	0.000	0.000
Gulf Coast	OK	Lincoln	7.631	7.674	0.044	OK081	Seminole loam, 1 to 3 percent slopes	0.000	0.000	0.041	0.000	0.001	0.044	0.000	0.000	0.000
Gulf Coast	OK	Lincoln	7.674	7.709	0.035	OK081	Seminole loam, 3 to 5 percent slopes	0.000	0.000	0.033	0.000	0.001	0.035	0.000	0.000	0.000
Gulf Coast	OK	Lincoln	7.709	8.314	0.605	OK081	Masham-Lucien complex, 5 to 20 percent slopes	0.000	0.575	0.000	0.000	0.012	0.605	0.182	0.000	0.000
Gulf Coast	OK	Lincoln	8.314	8.493	0.179	OK081	Grainola-Ashport complex, 0 to 12 percent slopes	0.000	0.108	0.000	0.000	0.004	0.179	0.108	0.000	0.000
Gulf Coast	OK	Lincoln	8.493	8.660	0.167	OK081	Coyle and Seminole soils, 3 to 5 percent slopes, severely eroded	0.000	0.000	0.050	0.000	0.003	0.167	0.100	0.000	0.000
Gulf Coast	OK	Lincoln	8.660	8.706	0.046	OK081	Grainola-Ashport complex, 0 to 12 percent slopes	0.000	0.027	0.000	0.000	0.001	0.046	0.027	0.000	0.000
Gulf Coast	OK	Lincoln	8.706	8.844	0.139	OK081	Darsil-Stephenville complex, 5 to 12 percent slopes	0.083	0.055	0.000	0.000	0.003	0.139	0.046	0.000	0.132
Gulf Coast	OK	Lincoln	8.844	8.956	0.111	OK081	Coyle loam, 3 to 5 percent slopes	0.000	0.000	0.000	0.111	0.002	0.111	0.111	0.000	0.000
Gulf Coast	OK	Lincoln	8.956	9.068	0.113	OK081	Seminole loam, 3 to 5 percent slopes, eroded	0.000	0.000	0.106	0.000	0.002	0.113	0.002	0.000	0.000
Gulf Coast	OK	Lincoln	9.068	9.121	0.053	OK081	Darsil-Stephenville complex, 5 to 12 percent slopes	0.032	0.021	0.000	0.000	0.001	0.053	0.017	0.000	0.050
Gulf Coast	OK	Lincoln	9.121	9.190	0.070	OK081	Seminole loam, 3 to 5 percent slopes, eroded	0.000	0.000	0.065	0.000	0.001	0.070	0.001	0.000	0.000
Gulf	OK	Lincoln	9.190	9.266	0.076	OK081	Darsil-Stephenville complex, 5 to 12 percent slopes	0.046	0.030	0.000	0.000	0.002	0.076	0.025	0.000	0.072

Appendix K – Soils by Milepost – Gulf Coast Section

Pipeline Segment		County	Beginning Milepost	Ending Milepost	Miles	Soil Series	Soil Series Name	Wind (miles)	water (miles)	Low revegetation potential (miles)	Prime Farmland (miles)	Hydric (miles)	Compaction Prone (miles)	Stony-Rocky (miles)	Shallow Bedrock (miles)	Droughty (miles)
Coast																
Gulf Coast	OK	Lincoln	9.266	9.464	0.198	OK081	Seminole loam, 3 to 5 percent slopes, eroded	0.000	0.000	0.186	0.000	0.004	0.198	0.004	0.000	0.000
Gulf Coast	OK	Lincoln	9.464	9.529	0.065	OK081	Grainola-Ashport complex, 0 to 12 percent slopes	0.000	0.039	0.000	0.000	0.001	0.065	0.039	0.000	0.000
Gulf Coast	OK	Lincoln	9.529	9.626	0.097	OK081	Seminole loam, 3 to 5 percent slopes	0.000	0.000	0.092	0.000	0.002	0.097	0.000	0.000	0.000
Gulf Coast	OK	Lincoln	9.626	9.663	0.038	OK081	Seminole loam, 3 to 5 percent slopes, eroded	0.000	0.000	0.036	0.000	0.001	0.038	0.001	0.000	0.000
Gulf Coast	OK	Lincoln	9.663	9.734	0.071	OK081	Grainola-Ashport complex, 0 to 12 percent slopes	0.000	0.043	0.000	0.000	0.001	0.071	0.043	0.000	0.000
Gulf Coast	OK	Lincoln	9.734	9.771	0.036	OK081	Seminole loam, 3 to 5 percent slopes, eroded	0.000	0.000	0.034	0.000	0.001	0.036	0.001	0.000	0.000
Gulf Coast	OK	Lincoln	9.771	9.909	0.138	OK081	Coyle and Seminole soils, 3 to 5 percent slopes, severely eroded	0.000	0.000	0.041	0.000	0.003	0.138	0.083	0.000	0.000
Gulf Coast	OK	Lincoln	9.909	10.112	0.203	OK081	Grainola-Ashport complex, 0 to 12 percent slopes	0.000	0.122	0.000	0.000	0.004	0.203	0.122	0.000	0.000
Gulf Coast	OK	Lincoln	10.112	10.286	0.174	OK081	Masham-Lucien complex, 5 to 20 percent slopes	0.000	0.165	0.000	0.000	0.003	0.174	0.052	0.000	0.000
Gulf Coast	OK	Lincoln	10.286	10.480	0.195	OK081	Seminole loam, 3 to 5 percent slopes, eroded	0.000	0.000	0.183	0.000	0.004	0.195	0.004	0.000	0.000
Gulf Coast	OK	Lincoln	10.480	10.580	0.100	OK081	Renthin-Grainola complex, 3 to 5 percent slopes, severely eroded	0.000	0.000	0.000	0.000	0.002	0.100	0.090	0.000	0.000
Gulf Coast	OK	Lincoln	10.580	10.837	0.257	OK081	Seminole loam, 3 to 5 percent slopes, eroded	0.000	0.000	0.241	0.000	0.005	0.257	0.005	0.000	0.000
Gulf Coast	OK	Lincoln	10.837	10.871	0.035	OK081	Seminole loam, 1 to 3 percent slopes	0.000	0.000	0.033	0.000	0.001	0.035	0.000	0.000	0.000
Gulf Coast	OK	Lincoln	10.871	11.106	0.235	OK081	Seminole loam, 3 to 5 percent slopes, eroded	0.000	0.000	0.221	0.000	0.005	0.235	0.005	0.000	0.000
Gulf Coast	OK	Lincoln	11.106	11.208	0.102	OK081	Coyle and Seminole soils, 3 to 5 percent slopes, severely eroded	0.000	0.000	0.031	0.000	0.002	0.102	0.061	0.000	0.000
Gulf Coast	OK	Lincoln	11.208	11.305	0.096	OK081	Grainola-Ashport complex, 0 to 12 percent slopes	0.000	0.058	0.000	0.000	0.002	0.096	0.058	0.000	0.000
Gulf Coast	OK	Lincoln	11.305	11.371	0.066	OK081	Seminole loam, 3 to 5 percent slopes, eroded	0.000	0.000	0.062	0.000	0.001	0.066	0.001	0.000	0.000
Gulf Coast	OK	Lincoln	11.371	11.485	0.114	OK081	Grainola-Ashport complex, 0 to 12 percent slopes	0.000	0.069	0.000	0.000	0.002	0.114	0.069	0.000	0.000
Gulf Coast	OK	Lincoln	11.485	12.001	0.516	OK081	Seminole loam, 3 to 5 percent slopes, eroded	0.000	0.000	0.485	0.000	0.010	0.516	0.010	0.000	0.000
Gulf Coast	OK	Lincoln	12.001	12.084	0.083	OK081	Ashport, Port, and Pulaski soils, 0 to 1 percent slopes, frequently flooded	0.000	0.000	0.000	0.000	0.002	0.083	0.000	0.000	0.000
Gulf Coast	OK	Lincoln	12.084	12.334	0.250	OK081	Seminole loam, 3 to 5 percent slopes, eroded	0.000	0.000	0.235	0.000	0.005	0.250	0.005	0.000	0.000
Gulf	OK	Lincoln	12.334	12.420	0.087	OK081	Seminole loam, 1 to 3 percent slopes	0.000	0.000	0.082	0.000	0.002	0.087	0.000	0.000	0.000

Appendix K – Soils by Milepost – Gulf Coast Section

Pipeline Segment		County	Beginning Milepost	Ending Milepost	Miles	Soil Series	Soil Series Name	Wind (miles)	water (miles)	Low revegetation potential (miles)	Prime Farmland (miles)	Hydric (miles)	Compaction Prone (miles)	Stony-Rocky (miles)	Shallow Bedrock (miles)	Droughty (miles)
Coast																
Gulf Coast	OK	Lincoln	12.420	12.559	0.139	OK081	Coyle and Seminole soils, 3 to 5 percent slopes, severely eroded	0.000	0.000	0.042	0.000	0.003	0.139	0.083	0.000	0.000
Gulf Coast	OK	Lincoln	12.559	12.633	0.074	OK081	Seminole loam, 1 to 3 percent slopes	0.000	0.000	0.070	0.000	0.001	0.074	0.000	0.000	0.000
Gulf Coast	OK	Lincoln	12.633	12.683	0.050	OK081	Coyle and Seminole soils, 3 to 5 percent slopes, severely eroded	0.000	0.000	0.015	0.000	0.001	0.050	0.030	0.000	0.000
Gulf Coast	OK	Lincoln	12.683	12.910	0.228	OK081	Seminole loam, 1 to 3 percent slopes	0.000	0.000	0.216	0.000	0.005	0.228	0.000	0.000	0.000
Gulf Coast	OK	Lincoln	12.910	13.366	0.455	OK081	Coyle and Seminole soils, 3 to 5 percent slopes, severely eroded	0.000	0.000	0.137	0.000	0.009	0.455	0.273	0.000	0.000
Gulf Coast	OK	Lincoln	13.366	13.418	0.052	OK081	Grainola-Ashport complex, 0 to 12 percent slopes	0.000	0.031	0.000	0.000	0.001	0.052	0.031	0.000	0.000
Gulf Coast	OK	Lincoln	13.418	13.547	0.129	OK081	Seminole loam, 3 to 5 percent slopes	0.000	0.000	0.123	0.000	0.003	0.129	0.000	0.000	0.000
Gulf Coast	OK	Lincoln	13.547	13.605	0.058	OK081	Grainola-Ashport complex, 0 to 12 percent slopes	0.000	0.035	0.000	0.000	0.001	0.058	0.035	0.000	0.000
Gulf Coast	OK	Lincoln	13.605	13.834	0.229	OK081	Seminole loam, 3 to 5 percent slopes	0.000	0.000	0.218	0.000	0.005	0.229	0.000	0.000	0.000
Gulf Coast	OK	Lincoln	13.834	14.043	0.209	OK081	Coyle and Seminole soils, 3 to 5 percent slopes, severely eroded	0.000	0.000	0.063	0.000	0.004	0.209	0.125	0.000	0.000
Gulf Coast	OK	Lincoln	14.043	14.214	0.171	OK081	Coyle loam, 3 to 5 percent slopes, eroded	0.000	0.000	0.007	0.000	0.003	0.171	0.164	0.000	0.000
Gulf Coast	OK	Lincoln	14.214	14.291	0.077	OK081	Ashport, Port, and Pulaski soils, 0 to 1 percent slopes, frequently flooded	0.000	0.000	0.000	0.000	0.002	0.077	0.000	0.000	0.000
Gulf Coast	OK	Lincoln	14.291	14.311	0.020	OK081	Coyle and Seminole soils, 3 to 5 percent slopes, severely eroded	0.000	0.000	0.006	0.000	0.000	0.020	0.012	0.000	0.000
Gulf Coast	OK	Lincoln	14.311	14.385	0.074	OK081	Seminole loam, 3 to 5 percent slopes, eroded	0.000	0.000	0.070	0.000	0.001	0.074	0.001	0.000	0.000
Gulf Coast	OK	Lincoln	14.385	14.615	0.230	OK081	Coyle and Seminole soils, 3 to 5 percent slopes, severely eroded	0.000	0.000	0.069	0.000	0.005	0.230	0.138	0.000	0.000
Gulf Coast	OK	Lincoln	14.615	14.700	0.085	OK081	Teller loam, 3 to 5 percent slopes	0.004	0.000	0.000	0.085	0.002	0.085	0.006	0.000	0.004
Gulf Coast	OK	Lincoln	14.700	14.866	0.166	OK081	Lawrie silt loam, 0 to 1 percent slopes, rarely flooded	0.000	0.000	0.000	0.166	0.003	0.166	0.000	0.000	0.000
Gulf Coast	OK	Lincoln	14.866	14.932	0.066	OK081	Ashport, Port, and Pulaski soils, 0 to 1 percent slopes, frequently flooded	0.000	0.000	0.000	0.000	0.001	0.066	0.000	0.000	0.000
Gulf Coast	OK	Lincoln	14.932	15.178	0.246	OK081	Darsil-Stephenville complex, 5 to 12 percent slopes	0.147	0.098	0.000	0.000	0.005	0.246	0.081	0.000	0.233
Gulf Coast	OK	Lincoln	15.178	15.268	0.090	OK081	Stephenville fine sandy loam, 3 to 5 percent slopes	0.004	0.000	0.000	0.090	0.002	0.090	0.081	0.000	0.090
Gulf Coast	OK	Lincoln	15.268	15.305	0.037	OK081	Seminole loam, 3 to 5 percent slopes, eroded	0.000	0.000	0.035	0.000	0.001	0.037	0.001	0.000	0.000
Gulf	OK	Lincoln	15.305	15.362	0.058	OK081	Stephenville fine sandy loam, 3 to 5 percent slopes	0.003	0.000	0.000	0.058	0.001	0.058	0.052	0.000	0.058

Appendix K – Soils by Milepost – Gulf Coast Section

Pipeline Segment		County	Beginning Milepost	Ending Milepost	Miles	Soil Series	Soil Series Name	Wind (miles)	water (miles)	Low revegetation potential (miles)	Prime Farmland (miles)	Hydric (miles)	Compaction Prone (miles)	Stony-Rocky (miles)	Shallow Bedrock (miles)	Droughty (miles)
Coast																
Gulf Coast	OK	Lincoln	15.362	15.446	0.084	OK081	Darsil-Stephenville complex, 5 to 12 percent slopes	0.050	0.034	0.000	0.000	0.002	0.084	0.028	0.000	0.080
Gulf Coast	OK	Lincoln	15.446	15.542	0.096	OK081	Coyle and Seminole soils, 3 to 5 percent slopes, severely eroded	0.000	0.000	0.029	0.000	0.002	0.096	0.057	0.000	0.000
Gulf Coast	OK	Lincoln	15.542	15.720	0.178	OK081	Darsil-Stephenville complex, 5 to 12 percent slopes	0.107	0.071	0.000	0.000	0.004	0.178	0.059	0.000	0.169
Gulf Coast	OK	Lincoln	15.720	15.997	0.277	OK081	Stephenville fine sandy loam, 3 to 5 percent slopes	0.014	0.000	0.000	0.277	0.006	0.277	0.249	0.000	0.277
Gulf Coast	OK	Lincoln	15.997	16.098	0.101	OK081	Darsil-Stephenville complex, 5 to 12 percent slopes	0.060	0.040	0.000	0.000	0.002	0.101	0.033	0.000	0.096
Gulf Coast	OK	Lincoln	16.098	16.220	0.122	OK081	Seminole loam, 3 to 5 percent slopes, eroded	0.000	0.000	0.115	0.000	0.002	0.122	0.002	0.000	0.000
Gulf Coast	OK	Lincoln	16.220	16.272	0.053	OK081	Coyle and Seminole soils, 3 to 5 percent slopes, severely eroded	0.000	0.000	0.016	0.000	0.001	0.053	0.032	0.000	0.000
Gulf Coast	OK	Lincoln	16.272	16.369	0.096	OK081	Grainola-Ashport complex, 0 to 12 percent slopes	0.000	0.058	0.000	0.000	0.002	0.096	0.058	0.000	0.000
Gulf Coast	OK	Lincoln	16.369	16.423	0.054	OK081	Seminole loam, 3 to 5 percent slopes, eroded	0.000	0.000	0.051	0.000	0.001	0.054	0.001	0.000	0.000
Gulf Coast	OK	Lincoln	16.423	16.527	0.104	OK081	Coyle and Seminole soils, 3 to 5 percent slopes, severely eroded	0.000	0.000	0.031	0.000	0.002	0.104	0.063	0.000	0.000
Gulf Coast	OK	Lincoln	16.527	16.620	0.093	OK081	Seminole loam, 3 to 5 percent slopes, eroded	0.000	0.000	0.087	0.000	0.002	0.093	0.002	0.000	0.000
Gulf Coast	OK	Lincoln	16.620	16.933	0.313	OK081	Coyle and Seminole soils, 3 to 5 percent slopes, severely eroded	0.000	0.000	0.094	0.000	0.006	0.313	0.188	0.000	0.000
Gulf Coast	OK	Lincoln	16.933	17.015	0.082	OK081	Seminole loam, 3 to 5 percent slopes, eroded	0.000	0.000	0.077	0.000	0.002	0.082	0.002	0.000	0.000
Gulf Coast	OK	Lincoln	17.015	17.186	0.171	OK081	Seminole loam, 1 to 3 percent slopes	0.000	0.000	0.163	0.000	0.003	0.171	0.000	0.000	0.000
Gulf Coast	OK	Lincoln	17.186	17.252	0.066	OK081	Stephenville fine sandy loam, 1 to 3 percent slopes	0.003	0.000	0.000	0.066	0.001	0.066	0.059	0.000	0.066
Gulf Coast	OK	Lincoln	17.252	17.302	0.049	OK081	Seminole loam, 1 to 3 percent slopes	0.000	0.000	0.047	0.000	0.001	0.049	0.000	0.000	0.000
Gulf Coast	OK	Lincoln	17.302	17.358	0.057	OK081	Stephenville fine sandy loam, 1 to 3 percent slopes	0.003	0.000	0.000	0.057	0.001	0.057	0.051	0.000	0.057
Gulf Coast	OK	Lincoln	17.358	17.398	0.039	OK081	Stephenville fine sandy loam, 3 to 5 percent slopes, eroded	0.004	0.000	0.000	0.000	0.001	0.039	0.035	0.000	0.039
Gulf Coast	OK	Lincoln	17.398	17.615	0.217	OK081	Seminole loam, 1 to 3 percent slopes	0.000	0.000	0.206	0.000	0.004	0.217	0.000	0.000	0.000
Gulf Coast	OK	Lincoln	17.615	17.699	0.085	OK081	Coyle and Seminole soils, 3 to 5 percent slopes, severely eroded	0.000	0.000	0.025	0.000	0.002	0.085	0.051	0.000	0.000
Gulf Coast	OK	Lincoln	17.699	17.788	0.089	OK081	Grainola-Ashport complex, 0 to 12 percent slopes	0.000	0.053	0.000	0.000	0.002	0.089	0.053	0.000	0.000
Gulf	OK	Lincoln	17.788	17.890	0.102	OK081	Seminole loam, 3 to 5 percent slopes, eroded	0.000	0.000	0.096	0.000	0.002	0.102	0.002	0.000	0.000

Appendix K – Soils by Milepost – Gulf Coast Section

Pipeline Segment		County	Beginning Milepost	Ending Milepost	Miles	Soil Series	Soil Series Name	Wind (miles)	water (miles)	Low revegetation potential (miles)	Prime Farmland (miles)	Hydric (miles)	Compaction Prone (miles)	Stony-Rocky (miles)	Shallow Bedrock (miles)	Droughty (miles)
Coast																
Gulf Coast	OK	Lincoln	17.890	18.014	0.124	OK081	Grainola-Ashport complex, 0 to 12 percent slopes	0.000	0.074	0.000	0.000	0.002	0.124	0.074	0.000	0.000
Gulf Coast	OK	Lincoln	18.014	18.105	0.091	OK081	Seminole loam, 3 to 5 percent slopes	0.000	0.000	0.086	0.000	0.002	0.091	0.000	0.000	0.000
Gulf Coast	OK	Lincoln	18.105	18.421	0.316	OK081	Seminole loam, 3 to 5 percent slopes, eroded	0.000	0.000	0.297	0.000	0.006	0.316	0.006	0.000	0.000
Gulf Coast	OK	Lincoln	18.421	18.480	0.059	OK081	Coyle and Seminole soils, 3 to 5 percent slopes, severely eroded	0.000	0.000	0.018	0.000	0.001	0.059	0.036	0.000	0.000
Gulf Coast	OK	Creek	18.480	18.595	0.115	OK037	Dennis and Okemah soils, 1 to 3 percent slopes	0.000	0.000	0.000	0.103	0.002	0.115	0.000	0.000	0.000
Gulf Coast	OK	Creek	18.595	18.638	0.043	OK037	Collinsville and Talihina soils, 5 to 12 percent slopes	0.000	0.015	0.000	0.000	0.001	0.043	0.039	0.024	0.000
Gulf Coast	OK	Creek	18.638	18.775	0.137	OK037	Coyle fine sandy loam, 1 to 3 percent slopes	0.000	0.000	0.000	0.123	0.003	0.137	0.123	0.000	0.000
Gulf Coast	OK	Creek	18.775	18.793	0.018	OK037	Collinsville and Talihina soils, 5 to 12 percent slopes	0.000	0.006	0.000	0.000	0.000	0.018	0.016	0.010	0.000
Gulf Coast	OK	Creek	18.793	18.982	0.189	OK037	Coyle fine sandy loam, 1 to 3 percent slopes	0.000	0.000	0.000	0.170	0.004	0.189	0.170	0.000	0.000
Gulf Coast	OK	Creek	18.982	19.039	0.057	OK037	Oil waste land-Huska complex, 1 to 8 percent slopes	0.000	0.000	0.017	0.000	0.001	0.057	0.000	0.000	0.000
Gulf Coast	OK	Creek	19.039	19.052	0.013	OK037	Darnell-Niotaze complex, 5 to 12 percent slopes	0.000	0.004	0.000	0.000	0.000	0.013	0.011	0.000	0.000
Gulf Coast	OK	Creek	19.052	19.353	0.302	OK037	Konawa and Gasil soils, 1 to 3 percent slopes	0.000	0.000	0.000	0.283	0.006	0.302	0.000	0.000	0.223
Gulf Coast	OK	Creek	19.353	19.476	0.123	OK037	Konawa and Gasil soils, 3 to 5 percent slopes	0.000	0.000	0.000	0.115	0.002	0.123	0.000	0.000	0.091
Gulf Coast	OK	Creek	19.476	19.504	0.028	OK037	Konawa-Gullied land complex, 3 to 8 percent slopes	0.000	0.000	0.000	0.000	0.001	0.028	0.000	0.000	0.019
Gulf Coast	OK	Creek	19.504	19.548	0.045	OK037	Konawa and Gasil soils, 5 to 8 percent slopes	0.000	0.000	0.000	0.041	0.001	0.045	0.000	0.000	0.032
Gulf Coast	OK	Creek	19.548	19.595	0.047	OK037	Konawa-Gullied land complex, 3 to 8 percent slopes	0.000	0.000	0.000	0.000	0.001	0.047	0.000	0.000	0.032
Gulf Coast	OK	Creek	19.595	19.664	0.069	OK037	Stephenville-Darnell complex, 5 to 8 percent slopes, severely eroded	0.000	0.000	0.000	0.000	0.001	0.069	0.057	0.000	0.000
Gulf Coast	OK	Creek	19.664	19.743	0.079	OK037	Darnell-Niotaze complex, 5 to 12 percent slopes	0.000	0.028	0.000	0.000	0.002	0.079	0.071	0.000	0.000
Gulf Coast	OK	Creek	19.743	19.814	0.071	OK037	Stephenville-Darnell complex, 5 to 8 percent slopes	0.000	0.000	0.000	0.062	0.001	0.071	0.062	0.000	0.039
Gulf Coast	OK	Creek	19.814	20.014	0.200	OK037	Konawa and Gasil soils, 5 to 8 percent slopes	0.000	0.000	0.000	0.184	0.004	0.200	0.000	0.000	0.144
Gulf Coast	OK	Creek	20.014	20.167	0.154	OK037	Pulaski fine sandy loam, 0 to 1 percent slopes, occasionally flooded	0.000	0.000	0.000	0.146	0.003	0.154	0.000	0.000	0.000
Gulf	OK	Creek	20.167	20.188	0.021	OK037	Darnell-Niotaze complex, 12 to 20 percent slopes	0.000	0.019	0.000	0.000	0.000	0.021	0.019	0.000	0.000

Appendix K – Soils by Milepost – Gulf Coast Section

Pipeline Segment		County	Beginning Milepost	Ending Milepost	Miles	Soil Series	Soil Series Name	Wind (miles)	water (miles)	Low revegetation potential (miles)	Prime Farmland (miles)	Hydric (miles)	Compaction Prone (miles)	Stony-Rocky (miles)	Shallow Bedrock (miles)	Droughty (miles)
Coast																
Gulf Coast	OK	Creek	20.188	20.217	0.029	OK037	Darnell-Niotaze complex, 5 to 12 percent slopes	0.000	0.010	0.000	0.000	0.001	0.029	0.026	0.000	0.000
Gulf Coast	OK	Creek	20.217	20.398	0.181	OK037	Stephenville-Darnell complex, 3 to 5 percent slopes	0.000	0.000	0.000	0.159	0.004	0.181	0.159	0.000	0.114
Gulf Coast	OK	Creek	20.398	20.461	0.063	OK037	Darnell-Niotaze complex, 5 to 12 percent slopes	0.000	0.022	0.000	0.000	0.001	0.063	0.057	0.000	0.000
Gulf Coast	OK	Creek	20.461	20.493	0.032	OK037	Stephenville-Darnell complex, 3 to 5 percent slopes	0.000	0.000	0.000	0.028	0.001	0.032	0.028	0.000	0.020
Gulf Coast	OK	Creek	20.493	20.569	0.077	OK037	Stephenville-Darnell complex, 5 to 8 percent slopes, severely eroded	0.000	0.000	0.000	0.000	0.002	0.077	0.063	0.000	0.000
Gulf Coast	OK	Creek	20.569	20.582	0.012	OK037	Pulaski fine sandy loam, 0 to 1 percent slopes, occasionally flooded	0.000	0.000	0.000	0.012	0.000	0.012	0.000	0.000	0.000
Gulf Coast	OK	Creek	20.582	20.632	0.050	OK037	Ashport silt loam, 0 to 1 percent slopes, frequently flooded	0.000	0.000	0.000	0.000	0.001	0.050	0.000	0.000	0.000
Gulf Coast	OK	Creek	20.632	20.799	0.167	OK037	Darnell-Niotaze complex, 12 to 20 percent slopes	0.000	0.150	0.000	0.000	0.003	0.167	0.150	0.000	0.000
Gulf Coast	OK	Creek	20.799	20.919	0.120	OK037	Collinsville and Talihina soils, 5 to 12 percent slopes	0.000	0.042	0.000	0.000	0.002	0.120	0.108	0.066	0.000
Gulf Coast	OK	Creek	20.919	20.988	0.069	OK037	Darnell-Niotaze complex, 5 to 12 percent slopes	0.000	0.024	0.000	0.000	0.001	0.069	0.062	0.000	0.000
Gulf Coast	OK	Creek	20.988	21.084	0.096	OK037	Stephenville-Darnell complex, 5 to 8 percent slopes	0.000	0.000	0.000	0.083	0.002	0.096	0.083	0.000	0.053
Gulf Coast	OK	Creek	21.084	21.325	0.241	OK037	Darnell-Niotaze complex, 5 to 12 percent slopes	0.000	0.084	0.000	0.000	0.005	0.241	0.217	0.000	0.000
Gulf Coast	OK	Creek	21.325	21.536	0.211	OK037	Darnell-Niotaze complex, 12 to 20 percent slopes	0.000	0.190	0.000	0.000	0.004	0.211	0.190	0.000	0.000
Gulf Coast	OK	Creek	21.536	21.603	0.067	OK037	Darnell-Niotaze complex, 5 to 12 percent slopes	0.000	0.023	0.000	0.000	0.001	0.067	0.060	0.000	0.000
Gulf Coast	OK	Creek	21.603	21.685	0.082	OK037	Darnell-Niotaze complex, 12 to 20 percent slopes	0.000	0.074	0.000	0.000	0.002	0.082	0.074	0.000	0.000
Gulf Coast	OK	Creek	21.685	21.839	0.154	OK037	Darnell-Niotaze complex, 5 to 12 percent slopes	0.000	0.054	0.000	0.000	0.003	0.154	0.138	0.000	0.000
Gulf Coast	OK	Creek	21.839	21.859	0.020	OK037	Darnell-Niotaze complex, 12 to 20 percent slopes	0.000	0.018	0.000	0.000	0.000	0.020	0.018	0.000	0.000
Gulf Coast	OK	Creek	21.859	21.926	0.067	OK037	Dougherty and Stidham soils, 3 to 8 percent slopes	0.063	0.000	0.000	0.063	0.001	0.067	0.000	0.000	0.063
Gulf Coast	OK	Creek	21.926	21.937	0.011	OK037	Ustibuck clay, 0 to 1 percent slopes, frequently flooded	0.000	0.000	0.000	0.000	0.000	0.011	0.000	0.000	0.000
Gulf Coast	OK	Creek	21.937	22.055	0.117	OK037	Port fine sandy loam, 0 to 1 percent slopes, occasionally flooded	0.000	0.000	0.000	0.104	0.002	0.117	0.000	0.000	0.000
Gulf Coast	OK	Creek	22.055	22.092	0.037	OK037	Ustibuck clay, 0 to 1 percent slopes, frequently flooded	0.000	0.000	0.000	0.000	0.001	0.037	0.000	0.000	0.000
Gulf	OK	Creek	22.092	22.184	0.092	OK037	Konawa-Gullied land complex, 3 to 8 percent slopes	0.000	0.000	0.000	0.000	0.002	0.092	0.000	0.000	0.062

Appendix K – Soils by Milepost – Gulf Coast Section

Pipeline Segment		County	Beginning Milepost	Ending Milepost	Miles	Soil Series	Soil Series Name	Wind (miles)	water (miles)	Low revegetation potential (miles)	Prime Farmland (miles)	Hydric (miles)	Compaction Prone (miles)	Stony-Rocky (miles)	Shallow Bedrock (miles)	Droughty (miles)
Coast																
Gulf Coast	OK	Creek	22.184	22.251	0.068	OK037	Konawa and Gasil soils, 5 to 8 percent slopes	0.000	0.000	0.000	0.062	0.001	0.068	0.000	0.000	0.049
Gulf Coast	OK	Creek	22.251	22.283	0.032	OK037	Ustibuck clay, 0 to 1 percent slopes, frequently flooded	0.000	0.000	0.000	0.000	0.001	0.032	0.000	0.000	0.000
Gulf Coast	OK	Creek	22.283	22.301	0.018	OK037	Konawa and Gasil soils, 5 to 8 percent slopes	0.000	0.000	0.000	0.016	0.000	0.018	0.000	0.000	0.013
Gulf Coast	OK	Creek	22.301	22.518	0.217	OK037	Eufaula loamy fine sand, 0 to 3 percent slopes	0.191	0.000	0.000	0.000	0.004	0.217	0.000	0.000	0.191
Gulf Coast	OK	Creek	22.518	22.739	0.221	OK037	Ustibuck clay, 0 to 1 percent slopes, frequently flooded	0.000	0.000	0.000	0.000	0.004	0.221	0.000	0.000	0.000
Gulf Coast	OK	Creek	22.739	22.767	0.028	OK037	Wann loam, 0 to 1 percent slopes	0.000	0.000	0.000	0.000	0.001	0.028	0.000	0.000	0.000
Gulf Coast	OK	Creek	22.767	23.627	0.860	OK037	Ustibuck clay, 0 to 1 percent slopes, frequently flooded	0.000	0.000	0.000	0.000	0.017	0.860	0.000	0.000	0.000
Gulf Coast	OK	Creek	23.627	23.653	0.026	OK037	Konawa-Gullied land complex, 3 to 8 percent slopes	0.000	0.000	0.000	0.000	0.001	0.026	0.000	0.000	0.018
Gulf Coast	OK	Okfuskee	23.653	23.700	0.048	OK107	Teller fine sandy loam, 1 to 3 percent slopes	0.000	0.000	0.000	0.048	0.001	0.048	0.000	0.000	0.000
Gulf Coast	OK	Okfuskee	23.700	24.070	0.370	OK107	Stephenville-Darsil-Gullied land complex, 3 to 8 percent slopes	0.104	0.000	0.000	0.000	0.007	0.370	0.185	0.000	0.104
Gulf Coast	OK	Okfuskee	24.070	24.086	0.015	OK107	Darsil-Stephenville complex, 5 to 12 percent slopes	0.009	0.005	0.000	0.000	0.000	0.015	0.005	0.000	0.014
Gulf Coast	OK	Okfuskee	24.086	25.168	1.083	OK107	Yahola fine sandy loam, 0 to 1 percent slopes, occasionally flooded	0.054	0.000	0.000	1.083	0.022	1.083	0.000	0.000	0.054
Gulf Coast	OK	Okfuskee	25.168	25.379	0.210	OK107	Darsil-Stephenville complex, 5 to 12 percent slopes	0.126	0.074	0.000	0.000	0.004	0.210	0.074	0.000	0.200
Gulf Coast	OK	Okfuskee	25.379	25.538	0.159	OK107	Stephenville-Darsil-Gullied land complex, 3 to 8 percent slopes	0.045	0.000	0.000	0.000	0.003	0.159	0.080	0.000	0.045
Gulf Coast	OK	Okfuskee	25.538	25.676	0.138	OK107	Darsil-Stephenville complex, 5 to 12 percent slopes	0.083	0.048	0.000	0.000	0.003	0.138	0.048	0.000	0.131
Gulf Coast	OK	Okfuskee	25.676	25.785	0.109	OK107	Stephenville-Darsil-Gullied land complex, 3 to 8 percent slopes	0.031	0.000	0.000	0.000	0.002	0.109	0.055	0.000	0.031
Gulf Coast	OK	Okfuskee	25.785	25.919	0.135	OK107	Darsil-Stephenville complex, 5 to 12 percent slopes	0.081	0.047	0.000	0.000	0.003	0.135	0.047	0.000	0.128
Gulf Coast	OK	Okfuskee	25.919	25.983	0.063	OK107	Yahola fine sandy loam, 0 to 1 percent slopes, occasionally flooded	0.003	0.000	0.000	0.063	0.001	0.063	0.000	0.000	0.003
Gulf Coast	OK	Okfuskee	25.983	26.388	0.406	OK107	Darsil-Stephenville complex, 5 to 12 percent slopes	0.244	0.142	0.000	0.000	0.008	0.406	0.142	0.000	0.386
Gulf Coast	OK	Okfuskee	26.388	26.897	0.509	OK107	Renfrow silt loam, 3 to 5 percent slopes	0.000	0.000	0.010	0.509	0.010	0.509	0.041	0.000	0.000
Gulf Coast	OK	Okfuskee	26.897	27.012	0.115	OK107	Darsil-Stephenville complex, 5 to 12 percent slopes	0.069	0.040	0.000	0.000	0.002	0.115	0.040	0.000	0.109
Gulf	OK	Okfuske	27.012	27.403	0.391	OK107	Darsil-Stephenville complex, 3 to 5 percent slopes	0.195	0.000	0.000	0.000	0.008	0.391	0.176	0.000	0.371

Appendix K – Soils by Milepost – Gulf Coast Section

Pipeline Segment		County	Beginning Milepost	Ending Milepost	Miles	Soil Series	Soil Series Name	Wind (miles)	water (miles)	Low revegetation potential (miles)	Prime Farmland (miles)	Hydric (miles)	Compaction Prone (miles)	Stony-Rocky (miles)	Shallow Bedrock (miles)	Droughty (miles)
Coast		e														
Gulf Coast	OK	Okfuskee	27.403	27.444	0.042	OK107	Darsil-Stephenville complex, 5 to 12 percent slopes	0.025	0.015	0.000	0.000	0.001	0.042	0.015	0.000	0.040
Gulf Coast	OK	Okfuskee	27.444	28.345	0.901	OK107	Darsil-Stephenville complex, 3 to 5 percent slopes	0.451	0.000	0.000	0.000	0.018	0.901	0.405	0.000	0.856
Gulf Coast	OK	Okfuskee	28.345	28.582	0.236	OK107	Masham silty clay loam, 3 to 8 percent slopes	0.000	0.000	0.000	0.000	0.005	0.236	0.012	0.000	0.000
Gulf Coast	OK	Okfuskee	28.582	28.840	0.259	OK107	Stephenville-Darsil-Gullied land complex, 3 to 8 percent slopes	0.072	0.000	0.000	0.000	0.005	0.259	0.129	0.000	0.072
Gulf Coast	OK	Okfuskee	28.840	29.019	0.178	OK107	Yahola fine sandy loam, 0 to 1 percent slopes, occasionally flooded	0.009	0.000	0.000	0.178	0.004	0.178	0.000	0.000	0.009
Gulf Coast	OK	Okfuskee	29.019	29.089	0.070	OK107	Darsil-Stephenville complex, 5 to 12 percent slopes	0.042	0.025	0.000	0.000	0.001	0.070	0.025	0.000	0.067
Gulf Coast	OK	Okfuskee	29.089	29.163	0.074	OK107	Stephenville-Darsil-Gullied land complex, 3 to 8 percent slopes	0.021	0.000	0.000	0.000	0.001	0.074	0.037	0.000	0.021
Gulf Coast	OK	Okfuskee	29.163	29.216	0.054	OK107	Darsil-Stephenville complex, 5 to 12 percent slopes	0.032	0.019	0.000	0.000	0.001	0.054	0.019	0.000	0.051
Gulf Coast	OK	Okfuskee	29.216	29.349	0.133	OK107	Yahola fine sandy loam, 0 to 1 percent slopes, occasionally flooded	0.007	0.000	0.000	0.133	0.003	0.133	0.000	0.000	0.007
Gulf Coast	OK	Okfuskee	29.349	29.411	0.062	OK107	Stephenville-Darsil-Newalla complex, 3 to 5 percent slopes	0.018	0.000	0.001	0.062	0.001	0.062	0.038	0.000	0.022
Gulf Coast	OK	Okfuskee	29.411	29.477	0.067	OK107	Darsil-Stephenville complex, 5 to 12 percent slopes	0.040	0.023	0.000	0.000	0.001	0.067	0.023	0.000	0.063
Gulf Coast	OK	Okfuskee	29.477	29.693	0.215	OK107	Stephenville-Darsil-Newalla complex, 3 to 5 percent slopes	0.065	0.000	0.004	0.215	0.004	0.215	0.134	0.000	0.078
Gulf Coast	OK	Okfuskee	29.693	30.040	0.347	OK107	Darsil-Stephenville complex, 5 to 12 percent slopes	0.208	0.122	0.000	0.000	0.007	0.347	0.122	0.000	0.330
Gulf Coast	OK	Okfuskee	30.040	30.296	0.256	OK107	Stephenville-Darsil-Newalla complex, 3 to 5 percent slopes	0.077	0.000	0.005	0.256	0.005	0.256	0.159	0.000	0.092
Gulf Coast	OK	Okfuskee	30.296	30.508	0.212	OK107	Darsil-Stephenville complex, 5 to 12 percent slopes	0.127	0.074	0.000	0.000	0.004	0.212	0.074	0.000	0.201
Gulf Coast	OK	Okfuskee	30.508	30.546	0.038	OK107	Stephenville-Darsil-Newalla complex, 3 to 5 percent slopes	0.012	0.000	0.001	0.038	0.001	0.038	0.024	0.000	0.014
Gulf Coast	OK	Okfuskee	30.546	30.691	0.145	OK107	Darsil-Stephenville complex, 5 to 12 percent slopes	0.087	0.051	0.000	0.000	0.003	0.145	0.051	0.000	0.138
Gulf Coast	OK	Okfuskee	30.691	30.818	0.127	OK107	Stephenville-Darsil-Newalla complex, 3 to 5 percent slopes	0.038	0.000	0.003	0.127	0.003	0.127	0.079	0.000	0.046
Gulf Coast	OK	Okfuskee	30.818	30.878	0.060	OK107	Teller fine sandy loam, 1 to 3 percent slopes	0.000	0.000	0.000	0.060	0.001	0.060	0.000	0.000	0.000
Gulf Coast	OK	Okfuskee	30.878	31.028	0.150	OK107	Yahola fine sandy loam, 0 to 1 percent slopes, occasionally flooded	0.008	0.000	0.000	0.150	0.003	0.150	0.000	0.000	0.008
Gulf Coast	OK	Okfuskee	31.028	31.097	0.068	OK107	Stephenville-Darsil-Gullied land complex, 3 to 8 percent slopes	0.019	0.000	0.000	0.000	0.001	0.068	0.034	0.000	0.019
Gulf	OK	Okfuske	31.097	31.279	0.182	OK107	Yahola fine sandy loam, 0 to 1 percent slopes,	0.009	0.000	0.000	0.182	0.004	0.182	0.000	0.000	0.009

Appendix K – Soils by Milepost – Gulf Coast Section

Pipeline Segment		County	Beginning Milepost	Ending Milepost	Miles	Soil Series	Soil Series Name	Wind (miles)	water (miles)	Low revegetation potential (miles)	Prime Farmland (miles)	Hydric (miles)	Compaction Prone (miles)	Stony-Rocky (miles)	Shallow Bedrock (miles)	Droughty (miles)
Coast		e					occasionally flooded									
Gulf Coast	OK	Okfuskee	31.279	32.168	0.889	OK107	Darsil-Stephenville complex, 3 to 5 percent slopes	0.444	0.000	0.000	0.000	0.018	0.889	0.400	0.000	0.844
Gulf Coast	OK	Okfuskee	32.168	33.143	0.975	OK107	Stephenville-Darsil-Gullied land complex, 3 to 8 percent slopes	0.273	0.000	0.000	0.000	0.019	0.975	0.487	0.000	0.273
Gulf Coast	OK	Okfuskee	33.143	33.239	0.097	OK107	Yahola fine sandy loam, 0 to 1 percent slopes, occasionally flooded	0.005	0.000	0.000	0.097	0.002	0.097	0.000	0.000	0.005
Gulf Coast	OK	Okfuskee	33.239	33.429	0.190	OK107	Stephenville-Darsil-Gullied land complex, 3 to 8 percent slopes	0.053	0.000	0.000	0.000	0.004	0.190	0.095	0.000	0.053
Gulf Coast	OK	Okfuskee	33.429	33.548	0.119	OK107	Masham silty clay loam, 3 to 8 percent slopes	0.000	0.000	0.000	0.000	0.002	0.119	0.006	0.000	0.000
Gulf Coast	OK	Okfuskee	33.548	33.603	0.055	OK107	Darsil-Stephenville complex, 5 to 12 percent slopes	0.033	0.019	0.000	0.000	0.001	0.055	0.019	0.000	0.052
Gulf Coast	OK	Okfuskee	33.603	33.892	0.289	OK107	Chickasha loam, 1 to 3 percent slopes	0.000	0.000	0.000	0.289	0.006	0.289	0.014	0.000	0.000
Gulf Coast	OK	Okfuskee	33.892	34.042	0.150	OK107	Darsil-Stephenville complex, 5 to 12 percent slopes	0.090	0.053	0.000	0.000	0.003	0.150	0.053	0.000	0.143
Gulf Coast	OK	Okfuskee	34.042	34.155	0.113	OK107	Yahola fine sandy loam, 0 to 1 percent slopes, occasionally flooded	0.006	0.000	0.000	0.113	0.002	0.113	0.000	0.000	0.006
Gulf Coast	OK	Okfuskee	34.155	34.242	0.087	OK107	Darsil-Stephenville complex, 5 to 12 percent slopes	0.052	0.030	0.000	0.000	0.002	0.087	0.030	0.000	0.083
Gulf Coast	OK	Okfuskee	34.242	34.300	0.057	OK107	Stephenville-Darsil-Gullied land complex, 3 to 8 percent slopes	0.016	0.000	0.000	0.000	0.001	0.057	0.029	0.000	0.016
Gulf Coast	OK	Okfuskee	34.300	34.432	0.132	OK107	Darsil-Stephenville complex, 3 to 5 percent slopes	0.066	0.000	0.000	0.000	0.003	0.132	0.060	0.000	0.126
Gulf Coast	OK	Okfuskee	34.432	34.591	0.159	OK107	Stephenville-Darsil-Gullied land complex, 3 to 8 percent slopes	0.045	0.000	0.000	0.000	0.003	0.159	0.080	0.000	0.045
Gulf Coast	OK	Okfuskee	34.591	34.903	0.312	OK107	Darsil-Stephenville complex, 5 to 12 percent slopes	0.187	0.109	0.000	0.000	0.006	0.312	0.109	0.000	0.296
Gulf Coast	OK	Okfuskee	34.903	35.532	0.629	OK107	Stephenville-Darsil-Gullied land complex, 3 to 8 percent slopes	0.176	0.000	0.000	0.000	0.013	0.629	0.314	0.000	0.176
Gulf Coast	OK	Okfuskee	35.532	35.874	0.342	OK107	Darsil-Stephenville complex, 5 to 12 percent slopes	0.205	0.120	0.000	0.000	0.007	0.342	0.120	0.000	0.325
Gulf Coast	OK	Okfuskee	35.874	35.897	0.023	OK107	Yahola fine sandy loam, 0 to 1 percent slopes, occasionally flooded	0.001	0.000	0.000	0.023	0.000	0.023	0.000	0.000	0.001
Gulf Coast	OK	Okfuskee	35.897	36.490	0.593	OK107	Darsil-Stephenville complex, 5 to 12 percent slopes	0.356	0.208	0.000	0.000	0.012	0.593	0.208	0.000	0.563
Gulf Coast	OK	Okfuskee	36.490	36.820	0.330	OK107	Renfrow silt loam, 3 to 5 percent slopes	0.000	0.000	0.007	0.330	0.007	0.330	0.026	0.000	0.000
Gulf Coast	OK	Okfuskee	36.820	36.890	0.070	OK107	Galey fine sandy loam, 3 to 5 percent slopes	0.000	0.000	0.000	0.070	0.001	0.070	0.000	0.000	0.000
Gulf Coast	OK	Okfuskee	36.890	37.015	0.126	OK107	Navina loam, 1 to 3 percent slopes	0.003	0.000	0.000	0.126	0.003	0.126	0.000	0.000	0.003
Gulf	OK	Okfuske	37.015	37.221	0.206	OK107	Galey fine sandy loam, 3 to 5 percent slopes	0.000	0.000	0.000	0.206	0.004	0.206	0.000	0.000	0.000

Appendix K – Soils by Milepost – Gulf Coast Section

Pipeline Segment		County	Beginning Milepost	Ending Milepost	Miles	Soil Series	Soil Series Name	Wind (miles)	water (miles)	Low revegetation potential (miles)	Prime Farmland (miles)	Hydric (miles)	Compaction Prone (miles)	Stony-Rocky (miles)	Shallow Bedrock (miles)	Droughty (miles)
Coast		e														
Gulf Coast	OK	Okfuskee	37.221	37.453	0.233	OK107	Navina loam, 1 to 3 percent slopes	0.005	0.000	0.000	0.233	0.005	0.233	0.000	0.000	0.005
Gulf Coast	OK	Okfuskee	37.453	37.526	0.073	OK107	Galey fine sandy loam, 3 to 5 percent slopes	0.000	0.000	0.000	0.073	0.001	0.073	0.000	0.000	0.000
Gulf Coast	OK	Okfuskee	37.526	37.973	0.446	OK107	Darsil-Stephenville complex, 5 to 12 percent slopes	0.268	0.156	0.000	0.000	0.009	0.446	0.156	0.000	0.424
Gulf Coast	OK	Okfuskee	37.973	38.049	0.077	OK107	Konawa-Gullied land complex, 3 to 12 percent slopes	0.004	0.056	0.000	0.000	0.002	0.077	0.000	0.000	0.054
Gulf Coast	OK	Okfuskee	38.049	38.131	0.081	OK107	Darsil-Stephenville complex, 5 to 12 percent slopes	0.049	0.028	0.000	0.000	0.002	0.081	0.028	0.000	0.077
Gulf Coast	OK	Okfuskee	38.131	38.616	0.486	OK107	Eufaula loamy fine sand, 0 to 3 percent slopes	0.461	0.000	0.000	0.000	0.010	0.486	0.000	0.000	0.476
Gulf Coast	OK	Okfuskee	38.616	38.743	0.127	OK107	Darsil-Stephenville complex, 5 to 12 percent slopes	0.076	0.044	0.000	0.000	0.003	0.127	0.044	0.000	0.121
Gulf Coast	OK	Okfuskee	38.743	38.771	0.028	OK107	Yahola fine sandy loam, 0 to 1 percent slopes, occasionally flooded	0.001	0.000	0.000	0.028	0.001	0.028	0.000	0.000	0.001
Gulf Coast	OK	Okfuskee	38.771	38.788	0.017	OK107	Darsil-Stephenville complex, 5 to 12 percent slopes	0.010	0.006	0.000	0.000	0.000	0.017	0.006	0.000	0.016
Gulf Coast	OK	Okfuskee	38.788	39.069	0.282	OK107	Yahola fine sandy loam, 0 to 1 percent slopes, occasionally flooded	0.014	0.000	0.000	0.282	0.006	0.282	0.000	0.000	0.014
Gulf Coast	OK	Okfuskee	39.069	39.131	0.062	OK107	Mason silt loam, 0 to 1 percent slopes, rarely flooded	0.000	0.000	0.000	0.062	0.001	0.062	0.000	0.000	0.000
Gulf Coast	OK	Okfuskee	39.131	39.172	0.041	OK107	Water	0.000	0.000	0.000	0.000	0.001	0.041	0.000	0.000	0.000
Gulf Coast	TX	Seminole	39.172	39.181	0.009	OK133	Water	0.000	0.000	0.000	0.000	0.000	0.009	0.000	0.000	0.000
Gulf Coast	TX	Seminole	39.181	39.234	0.053	OK133	Gracemore loamy fine sand, 0 to 1 percent slopes, frequently flooded	0.050	0.000	0.050	0.000	0.001	0.053	0.000	0.000	0.000
Gulf Coast	TX	Seminole	39.234	39.269	0.035	OK133	Yahola fine sandy loam, 0 to 1 percent slopes, occasionally flooded	0.003	0.000	0.000	0.035	0.001	0.035	0.000	0.000	0.003
Gulf Coast	TX	Seminole	39.269	39.309	0.041	OK133	Keokuk silt loam, 0 to 1 percent slopes, rarely flooded	0.000	0.000	0.000	0.041	0.001	0.041	0.000	0.000	0.000
Gulf Coast	TX	Seminole	39.309	39.348	0.039	OK133	Asher silty clay loam, 0 to 1 percent slopes, rarely flooded	0.000	0.000	0.000	0.039	0.001	0.039	0.000	0.000	0.000
Gulf Coast	TX	Seminole	39.348	39.368	0.020	OK133	Keokuk silt loam, 0 to 1 percent slopes, rarely flooded	0.000	0.000	0.000	0.020	0.000	0.020	0.000	0.000	0.000
Gulf Coast	TX	Seminole	39.368	39.487	0.119	OK133	Niotaze-Wewoka complex, 3 to 12 percent slopes	0.000	0.069	0.000	0.000	0.002	0.119	0.119	0.000	0.051
Gulf Coast	TX	Seminole	39.487	39.587	0.099	OK133	Stephenville fine sandy loam, 3 to 5 percent slopes	0.000	0.000	0.000	0.099	0.002	0.099	0.099	0.000	0.000
Gulf Coast	TX	Seminole	39.587	39.590	0.003	OK133	Niotaze-Wewoka complex, 3 to 12 percent slopes	0.000	0.002	0.000	0.000	0.000	0.003	0.003	0.000	0.001
Gulf	TX	Seminol	39.590	39.672	0.083	OK133	Stephenville fine sandy loam, 3 to 5 percent slopes	0.000	0.000	0.000	0.083	0.002	0.083	0.083	0.000	0.000

Appendix K – Soils by Milepost – Gulf Coast Section

Pipeline Segment		County	Beginning Milepost	Ending Milepost	Miles	Soil Series	Soil Series Name	Wind (miles)	water (miles)	Low revegetation potential (miles)	Prime Farmland (miles)	Hydric (miles)	Compaction Prone (miles)	Stony-Rocky (miles)	Shallow Bedrock (miles)	Droughty (miles)
Coast		e														
Gulf Coast	TX	Seminole	39.672	39.680	0.008	OK133	Niotaze-Wewoka complex, 3 to 12 percent slopes	0.000	0.005	0.000	0.000	0.000	0.008	0.008	0.000	0.003
Gulf Coast	TX	Seminole	39.680	39.753	0.073	OK133	Stephenville fine sandy loam, 3 to 5 percent slopes	0.000	0.000	0.000	0.073	0.001	0.073	0.073	0.000	0.000
Gulf Coast	TX	Seminole	39.753	39.786	0.032	OK133	Niotaze-Wewoka complex, 3 to 12 percent slopes	0.000	0.019	0.000	0.000	0.001	0.032	0.032	0.000	0.014
Gulf Coast	TX	Seminole	39.786	39.917	0.132	OK133	Stephenville-Darnell complex, 5 to 15 percent slopes	0.000	0.079	0.000	0.000	0.003	0.132	0.119	0.000	0.066
Gulf Coast	TX	Seminole	39.917	40.020	0.103	OK133	Niotaze-Wewoka complex, 3 to 12 percent slopes	0.000	0.060	0.000	0.000	0.002	0.103	0.103	0.000	0.044
Gulf Coast	TX	Seminole	40.020	40.053	0.033	OK133	Konawa fine sandy loam, 3 to 5 percent slopes	0.003	0.000	0.000	0.033	0.001	0.033	0.000	0.000	0.033
Gulf Coast	TX	Seminole	40.053	40.095	0.042	OK133	Niotaze-Wewoka complex, 3 to 12 percent slopes	0.000	0.024	0.000	0.000	0.001	0.042	0.042	0.000	0.018
Gulf Coast	TX	Seminole	40.095	40.164	0.068	OK133	Konawa fine sandy loam, 3 to 5 percent slopes	0.007	0.000	0.000	0.068	0.001	0.068	0.000	0.000	0.068
Gulf Coast	TX	Seminole	40.164	40.228	0.064	OK133	Konawa fine sandy loam, 1 to 3 percent slopes	0.003	0.000	0.000	0.064	0.001	0.064	0.000	0.000	0.064
Gulf Coast	TX	Seminole	40.228	40.319	0.092	OK133	Konawa fine sandy loam, 3 to 5 percent slopes	0.009	0.000	0.000	0.092	0.002	0.092	0.000	0.000	0.092
Gulf Coast	TX	Seminole	40.319	40.372	0.053	OK133	Gowton loam, 0 to 1 percent slopes, occasionally flooded	0.000	0.000	0.000	0.053	0.001	0.053	0.000	0.000	0.000
Gulf Coast	TX	Seminole	40.372	40.431	0.058	OK133	Gowton fine sandy loam, 0 to 1 percent slopes, frequently flooded	0.000	0.000	0.000	0.000	0.001	0.058	0.000	0.000	0.000
Gulf Coast	TX	Seminole	40.431	40.490	0.060	OK133	Gowton loam, 0 to 1 percent slopes, occasionally flooded	0.000	0.000	0.000	0.060	0.001	0.060	0.000	0.000	0.000
Gulf Coast	TX	Seminole	40.490	40.617	0.126	OK133	Seminole, Chickasha, and Mulhall soils, 3 to 8 percent slopes, severely eroded	0.000	0.000	0.051	0.000	0.003	0.126	0.023	0.000	0.000
Gulf Coast	TX	Seminole	40.617	40.692	0.075	OK133	Dennis loam, 3 to 5 percent slopes	0.000	0.000	0.004	0.075	0.002	0.075	0.000	0.000	0.000
Gulf Coast	TX	Seminole	40.692	40.782	0.090	OK133	Konawa fine sandy loam, 3 to 5 percent slopes	0.009	0.000	0.000	0.090	0.002	0.090	0.000	0.000	0.090
Gulf Coast	TX	Seminole	40.782	40.893	0.111	OK133	Seminole, Chickasha, and Mulhall soils, 3 to 8 percent slopes, severely eroded	0.000	0.000	0.044	0.000	0.002	0.111	0.020	0.000	0.000
Gulf Coast	TX	Seminole	40.893	40.930	0.037	OK133	Dennis loam, 3 to 5 percent slopes	0.000	0.000	0.002	0.037	0.001	0.037	0.000	0.000	0.000
Gulf Coast	TX	Seminole	40.930	40.961	0.031	OK133	Niotaze-Wewoka complex, 3 to 12 percent slopes	0.000	0.018	0.000	0.000	0.001	0.031	0.031	0.000	0.013
Gulf Coast	TX	Seminole	40.961	41.147	0.186	OK133	Konawa fine sandy loam, 3 to 5 percent slopes, eroded	0.009	0.000	0.000	0.000	0.004	0.186	0.000	0.000	0.186
Gulf Coast	TX	Seminole	41.147	41.176	0.029	OK133	Konawa fine sandy loam, 3 to 5 percent slopes	0.003	0.000	0.000	0.029	0.001	0.029	0.000	0.000	0.029
Gulf	TX	Seminol	41.176	41.242	0.066	OK133	Pits	0.000	0.000	0.000	0.000	0.001	0.066	0.000	0.000	0.000

Appendix K – Soils by Milepost – Gulf Coast Section

Pipeline Segment		County	Beginning Milepost	Ending Milepost	Miles	Soil Series	Soil Series Name	Wind (miles)	water (miles)	Low revegetation potential (miles)	Prime Farmland (miles)	Hydric (miles)	Compaction Prone (miles)	Stony-Rocky (miles)	Shallow Bedrock (miles)	Droughty (miles)
Coast		e														
Gulf Coast	TX	Seminole	41.242	41.256	0.014	OK133	Konawa fine sandy loam, 3 to 5 percent slopes	0.001	0.000	0.000	0.014	0.000	0.014	0.000	0.000	0.014
Gulf Coast	TX	Seminole	41.256	41.261	0.005	OK133	Pits	0.000	0.000	0.000	0.000	0.000	0.005	0.000	0.000	0.000
Gulf Coast	TX	Seminole	41.261	41.341	0.081	OK133	Niotaze-Wewoka complex, 3 to 12 percent slopes	0.000	0.047	0.000	0.000	0.002	0.081	0.081	0.000	0.035
Gulf Coast	TX	Seminole	41.341	41.419	0.078	OK133	Konawa fine sandy loam, 3 to 5 percent slopes	0.008	0.000	0.000	0.078	0.002	0.078	0.000	0.000	0.078
Gulf Coast	TX	Seminole	41.419	41.505	0.085	OK133	Dennis loam, 3 to 5 percent slopes	0.000	0.000	0.004	0.085	0.002	0.085	0.000	0.000	0.000
Gulf Coast	TX	Seminole	41.505	41.550	0.046	OK133	Seminole-Gowton complex, 0 to 12 percent slopes	0.000	0.000	0.025	0.000	0.001	0.046	0.000	0.000	0.000
Gulf Coast	TX	Seminole	41.550	41.651	0.101	OK133	Eram-Coweta complex, 5 to 12 percent slopes	0.000	0.091	0.000	0.000	0.002	0.101	0.025	0.000	0.000
Gulf Coast	TX	Seminole	41.651	41.731	0.080	OK133	Okemah silt loam, 1 to 3 percent slopes	0.000	0.000	0.004	0.080	0.002	0.080	0.000	0.000	0.000
Gulf Coast	TX	Seminole	41.731	41.752	0.021	OK133	Seminole-Gowton complex, 0 to 12 percent slopes	0.000	0.000	0.011	0.000	0.000	0.021	0.000	0.000	0.000
Gulf Coast	TX	Seminole	41.752	41.777	0.026	OK133	Gowton loam, 0 to 1 percent slopes, occasionally flooded	0.000	0.000	0.000	0.026	0.001	0.026	0.000	0.000	0.000
Gulf Coast	TX	Seminole	41.777	42.427	0.650	OK133	Seminole-Gowton complex, 0 to 12 percent slopes	0.000	0.000	0.357	0.000	0.013	0.650	0.000	0.000	0.000
Gulf Coast	TX	Seminole	42.427	42.634	0.207	OK133	Gowton loam, 0 to 1 percent slopes, occasionally flooded	0.000	0.000	0.000	0.207	0.004	0.207	0.000	0.000	0.000
Gulf Coast	TX	Seminole	42.634	42.698	0.064	OK133	Okemah-Pharoah complex, 0 to 3 percent slopes	0.000	0.000	0.019	0.064	0.001	0.064	0.003	0.000	0.000
Gulf Coast	TX	Seminole	42.698	42.751	0.053	OK133	Gowton loam, 0 to 1 percent slopes, occasionally flooded	0.000	0.000	0.000	0.053	0.001	0.053	0.000	0.000	0.000
Gulf Coast	TX	Seminole	42.751	42.775	0.024	OK133	Seminole-Gowton complex, 0 to 12 percent slopes	0.000	0.000	0.013	0.000	0.000	0.024	0.000	0.000	0.000
Gulf Coast	TX	Seminole	42.775	42.833	0.057	OK133	Niotaze-Darnell complex, 8 to 30 percent slopes	0.000	0.057	0.000	0.000	0.001	0.057	0.057	0.000	0.000
Gulf Coast	TX	Seminole	42.833	42.981	0.148	OK133	Eram-Coweta complex, 5 to 12 percent slopes	0.000	0.134	0.000	0.000	0.003	0.148	0.037	0.000	0.000
Gulf Coast	TX	Seminole	42.981	42.999	0.018	OK133	Dennis loam, 3 to 5 percent slopes	0.000	0.000	0.001	0.018	0.000	0.018	0.000	0.000	0.000
Gulf Coast	TX	Seminole	42.999	43.018	0.019	OK133	Bates-Coweta complex, 3 to 5 percent slopes	0.000	0.000	0.000	0.019	0.000	0.019	0.019	0.000	0.000
Gulf Coast	TX	Seminole	43.018	43.128	0.110	OK133	Dennis loam, 3 to 5 percent slopes	0.000	0.000	0.005	0.110	0.002	0.110	0.000	0.000	0.000
Gulf Coast	TX	Seminole	43.128	43.176	0.048	OK133	Stephenville fine sandy loam, 3 to 5 percent slopes	0.000	0.000	0.000	0.048	0.001	0.048	0.048	0.000	0.000
Gulf	TX	Seminol	43.176	43.259	0.083	OK133	Okemah-Pharoah complex, 0 to 3 percent slopes	0.000	0.000	0.025	0.083	0.002	0.083	0.004	0.000	0.000

Appendix K – Soils by Milepost – Gulf Coast Section

Pipeline Segment		County	Beginning Milepost	Ending Milepost	Miles	Soil Series	Soil Series Name	Wind (miles)	water (miles)	Low revegetation potential (miles)	Prime Farmland (miles)	Hydric (miles)	Compaction Prone (miles)	Stony-Rocky (miles)	Shallow Bedrock (miles)	Droughty (miles)
Coast		e														
Gulf Coast	TX	Seminole	43.259	43.332	0.073	OK133	Stephenville fine sandy loam, 1 to 3 percent slopes	0.000	0.000	0.000	0.073	0.001	0.073	0.073	0.000	0.070
Gulf Coast	TX	Seminole	43.332	43.517	0.186	OK133	Stephenville fine sandy loam, 3 to 5 percent slopes	0.000	0.000	0.000	0.186	0.004	0.186	0.186	0.000	0.000
Gulf Coast	TX	Seminole	43.517	43.560	0.043	OK133	Gowton fine sandy loam, 0 to 1 percent slopes, frequently flooded	0.000	0.000	0.000	0.000	0.001	0.043	0.000	0.000	0.000
Gulf Coast	TX	Seminole	43.560	43.657	0.097	OK133	Gowton loam, 0 to 1 percent slopes, occasionally flooded	0.000	0.000	0.000	0.097	0.002	0.097	0.000	0.000	0.000
Gulf Coast	TX	Seminole	43.657	43.710	0.053	OK133	Konawa fine sandy loam, 3 to 5 percent slopes, eroded	0.003	0.000	0.000	0.000	0.001	0.053	0.000	0.000	0.053
Gulf Coast	TX	Seminole	43.710	43.810	0.100	OK133	Gowton loam, 0 to 1 percent slopes, occasionally flooded	0.000	0.000	0.000	0.100	0.002	0.100	0.000	0.000	0.000
Gulf Coast	TX	Seminole	43.810	43.835	0.025	OK133	Pulaski fine sandy loam, 0 to 1 percent slopes, occasionally flooded	0.000	0.000	0.000	0.025	0.001	0.025	0.000	0.000	0.000
Gulf Coast	TX	Seminole	43.835	43.866	0.031	OK133	Gowton fine sandy loam, 0 to 1 percent slopes, frequently flooded	0.000	0.000	0.000	0.000	0.001	0.031	0.000	0.000	0.000
Gulf Coast	TX	Seminole	43.866	43.978	0.112	OK133	Pulaski fine sandy loam, 0 to 1 percent slopes, occasionally flooded	0.000	0.000	0.000	0.112	0.002	0.112	0.000	0.000	0.000
Gulf Coast	TX	Seminole	43.978	44.313	0.335	OK133	Stephenville-Darnell complex, 5 to 15 percent slopes	0.000	0.201	0.000	0.000	0.007	0.335	0.302	0.000	0.168
Gulf Coast	TX	Seminole	44.313	44.402	0.089	OK133	Stephenville-Darnell complex, 5 to 15 percent slopes, severely eroded	0.000	0.078	0.002	0.000	0.002	0.089	0.086	0.000	0.000
Gulf Coast	TX	Seminole	44.402	44.488	0.086	OK133	Stephenville-Darnell complex, 5 to 15 percent slopes	0.000	0.051	0.000	0.000	0.002	0.086	0.077	0.000	0.043
Gulf Coast	TX	Seminole	44.488	44.741	0.253	OK133	Stephenville fine sandy loam, 1 to 3 percent slopes	0.000	0.000	0.000	0.253	0.005	0.253	0.253	0.000	0.240
Gulf Coast	TX	Seminole	44.741	44.985	0.244	OK133	Stephenville-Darnell complex, 5 to 15 percent slopes, severely eroded	0.000	0.215	0.005	0.000	0.005	0.244	0.234	0.000	0.000
Gulf Coast	TX	Seminole	44.985	44.990	0.005	OK133	Stephenville-Darnell complex, 5 to 15 percent slopes	0.000	0.003	0.000	0.000	0.000	0.005	0.005	0.000	0.003
Gulf Coast	TX	Seminole	44.990	45.002	0.012	OK133	Stephenville-Darnell complex, 5 to 15 percent slopes, severely eroded	0.000	0.010	0.000	0.000	0.000	0.012	0.011	0.000	0.000
Gulf Coast	TX	Seminole	45.002	45.149	0.147	OK133	Gowton fine sandy loam, 0 to 1 percent slopes, frequently flooded	0.000	0.000	0.000	0.000	0.003	0.147	0.000	0.000	0.000
Gulf Coast	TX	Seminole	45.149	45.422	0.273	OK133	Stephenville-Darnell complex, 5 to 15 percent slopes	0.000	0.164	0.000	0.000	0.005	0.273	0.246	0.000	0.137
Gulf Coast	TX	Seminole	45.422	45.625	0.203	OK133	Stephenville-Darnell complex, 5 to 15 percent slopes, severely eroded	0.000	0.178	0.004	0.000	0.004	0.203	0.194	0.000	0.000
Gulf Coast	TX	Seminole	45.625	45.792	0.168	OK133	Stephenville-Darnell complex, 5 to 15 percent slopes	0.000	0.101	0.000	0.000	0.003	0.168	0.151	0.000	0.084
Gulf Coast	TX	Seminole	45.792	46.193	0.401	OK133	Stephenville-Darnell complex, 5 to 15 percent slopes, severely eroded	0.000	0.353	0.008	0.000	0.008	0.401	0.385	0.000	0.000
Gulf	TX	Seminol	46.193	46.511	0.318	OK133	Stephenville-Darnell complex, 5 to 15 percent	0.000	0.191	0.000	0.000	0.006	0.318	0.286	0.000	0.159

Appendix K – Soils by Milepost – Gulf Coast Section

Pipeline Segment		County	Beginning Milepost	Ending Milepost	Miles	Soil Series	Soil Series Name	Wind (miles)	water (miles)	Low revegetation potential (miles)	Prime Farmland (miles)	Hydric (miles)	Compaction Prone (miles)	Stony-Rocky (miles)	Shallow Bedrock (miles)	Droughty (miles)
Coast		e					slopes									
Gulf Coast	TX	Seminole	46.511	46.537	0.026	OK133	Seminole-Gowton complex, 0 to 12 percent slopes	0.000	0.000	0.014	0.000	0.001	0.026	0.000	0.000	0.000
Gulf Coast	TX	Seminole	46.537	46.563	0.027	OK133	Oil waste land	0.000	0.000	0.000	0.000	0.001	0.027	0.000	0.000	0.000
Gulf Coast	TX	Seminole	46.563	46.567	0.004	OK133	Eram-Coweta complex, 5 to 12 percent slopes	0.000	0.003	0.000	0.000	0.000	0.004	0.001	0.000	0.000
Gulf Coast	TX	Seminole	46.567	46.708	0.141	OK133	Seminole-Gowton complex, 0 to 12 percent slopes	0.000	0.000	0.077	0.000	0.003	0.141	0.000	0.000	0.000
Gulf Coast	TX	Seminole	46.708	46.793	0.085	OK133	Prue loam, 1 to 3 percent slopes	0.000	0.000	0.004	0.085	0.002	0.085	0.000	0.000	0.000
Gulf Coast	TX	Seminole	46.793	46.859	0.066	OK133	Okemah-Pharoah complex, 0 to 3 percent slopes	0.000	0.000	0.020	0.066	0.001	0.066	0.003	0.000	0.000
Gulf Coast	TX	Seminole	46.859	46.908	0.049	OK133	Seminole-Gowton complex, 0 to 12 percent slopes	0.000	0.000	0.027	0.000	0.001	0.049	0.000	0.000	0.000
Gulf Coast	TX	Seminole	46.908	47.051	0.143	OK133	Prue loam, 1 to 3 percent slopes	0.000	0.000	0.007	0.143	0.003	0.143	0.000	0.000	0.000
Gulf Coast	TX	Seminole	47.051	47.151	0.100	OK133	Seminole-Gowton complex, 0 to 12 percent slopes	0.000	0.000	0.055	0.000	0.002	0.100	0.000	0.000	0.000
Gulf Coast	TX	Seminole	47.151	47.190	0.039	OK133	Prue loam, 1 to 3 percent slopes	0.000	0.000	0.002	0.039	0.001	0.039	0.000	0.000	0.000
Gulf Coast	TX	Seminole	47.190	47.268	0.078	OK133	Seminole-Gowton complex, 0 to 12 percent slopes	0.000	0.000	0.043	0.000	0.002	0.078	0.000	0.000	0.000
Gulf Coast	TX	Seminole	47.268	47.352	0.084	OK133	Bates-Coweta complex, 3 to 5 percent slopes	0.000	0.000	0.000	0.084	0.002	0.084	0.084	0.000	0.000
Gulf Coast	TX	Seminole	47.352	47.427	0.075	OK133	Bates loam, 1 to 3 percent slopes	0.000	0.000	0.007	0.075	0.001	0.075	0.060	0.000	0.000
Gulf Coast	TX	Seminole	47.427	47.665	0.238	OK133	Okemah-Pharoah complex, 0 to 3 percent slopes	0.000	0.000	0.071	0.238	0.005	0.238	0.012	0.000	0.000
Gulf Coast	TX	Seminole	47.665	47.696	0.030	OK133	Seminole-Gowton complex, 0 to 12 percent slopes	0.000	0.000	0.017	0.000	0.001	0.030	0.000	0.000	0.000
Gulf Coast	TX	Seminole	47.696	47.716	0.020	OK133	Okemah-Pharoah complex, 0 to 3 percent slopes	0.000	0.000	0.006	0.020	0.000	0.020	0.001	0.000	0.000
Gulf Coast	TX	Seminole	47.716	47.774	0.058	OK133	Seminole-Gowton complex, 0 to 12 percent slopes	0.000	0.000	0.032	0.000	0.001	0.058	0.000	0.000	0.000
Gulf Coast	TX	Seminole	47.774	47.876	0.101	OK133	Bates loam, 3 to 5 percent slopes	0.000	0.000	0.008	0.101	0.002	0.101	0.083	0.000	0.000
Gulf Coast	TX	Seminole	47.876	47.940	0.064	OK133	Okemah-Pharoah complex, 0 to 3 percent slopes	0.000	0.000	0.019	0.064	0.001	0.064	0.003	0.000	0.000
Gulf Coast	TX	Seminole	47.940	48.023	0.083	OK133	Bates loam, 3 to 5 percent slopes	0.000	0.000	0.007	0.083	0.002	0.083	0.068	0.000	0.000
Gulf Coast	TX	Seminole	48.023	48.143	0.120	OK133	Stephenville fine sandy loam, 3 to 5 percent slopes	0.000	0.000	0.000	0.120	0.002	0.120	0.120	0.000	0.000
Gulf	TX	Seminol	48.143	48.223	0.080	OK133	Stephenville-Darnell complex, 5 to 15 percent	0.000	0.048	0.000	0.000	0.002	0.080	0.072	0.000	0.040

Appendix K – Soils by Milepost – Gulf Coast Section

Pipeline Segment		County	Beginning Milepost	Ending Milepost	Miles	Soil Series	Soil Series Name	Wind (miles)	water (miles)	Low revegetation potential (miles)	Prime Farmland (miles)	Hydric (miles)	Compaction Prone (miles)	Stony-Rocky (miles)	Shallow Bedrock (miles)	Droughty (miles)
Coast		e					slopes									
Gulf Coast	TX	Seminole	48.223	48.251	0.028	OK133	Niotaze-Darnell complex, 8 to 30 percent slopes	0.000	0.028	0.000	0.000	0.001	0.028	0.028	0.000	0.000
Gulf Coast	TX	Seminole	48.251	48.282	0.031	OK133	Konawa fine sandy loam, 3 to 5 percent slopes	0.003	0.000	0.000	0.031	0.001	0.031	0.000	0.000	0.031
Gulf Coast	TX	Seminole	48.282	48.379	0.097	OK133	Gowton fine sandy loam, 0 to 1 percent slopes, frequently flooded	0.000	0.000	0.000	0.000	0.002	0.097	0.000	0.000	0.000
Gulf Coast	TX	Seminole	48.379	48.533	0.154	OK133	Gowton loam, 0 to 1 percent slopes, occasionally flooded	0.000	0.000	0.000	0.154	0.003	0.154	0.000	0.000	0.000
Gulf Coast	TX	Seminole	48.533	48.674	0.141	OK133	Seminole, Chickasha, and Mulhall soils, 3 to 8 percent slopes, severely eroded	0.000	0.000	0.056	0.000	0.003	0.141	0.025	0.000	0.000
Gulf Coast	TX	Seminole	48.674	48.880	0.206	OK133	Niotaze-Darnell complex, 8 to 30 percent slopes	0.000	0.206	0.000	0.000	0.004	0.206	0.206	0.000	0.000
Gulf Coast	TX	Seminole	48.880	49.066	0.186	OK133	Stephenville-Darnell complex, 5 to 15 percent slopes	0.000	0.112	0.000	0.000	0.004	0.186	0.168	0.000	0.093
Gulf Coast	TX	Seminole	49.066	49.123	0.057	OK133	Niotaze-Darnell complex, 8 to 30 percent slopes	0.000	0.057	0.000	0.000	0.001	0.057	0.057	0.000	0.000
Gulf Coast	TX	Seminole	49.123	49.163	0.040	OK133	Eram-Coweta complex, 5 to 12 percent slopes	0.000	0.036	0.000	0.000	0.001	0.040	0.010	0.000	0.000
Gulf Coast	TX	Seminole	49.163	49.214	0.051	OK133	Seminole, Chickasha, and Mulhall soils, 3 to 8 percent slopes, severely eroded	0.000	0.000	0.020	0.000	0.001	0.051	0.009	0.000	0.000
Gulf Coast	TX	Seminole	49.214	49.270	0.056	OK133	Bates loam, 1 to 3 percent slopes	0.000	0.000	0.006	0.056	0.001	0.056	0.045	0.000	0.000
Gulf Coast	TX	Seminole	49.270	49.325	0.055	OK133	Stephenville-Darnell complex, 5 to 15 percent slopes	0.000	0.033	0.000	0.000	0.001	0.055	0.050	0.000	0.028
Gulf Coast	TX	Seminole	49.325	49.438	0.113	OK133	Bates loam, 3 to 5 percent slopes	0.000	0.000	0.009	0.113	0.002	0.113	0.093	0.000	0.000
Gulf Coast	TX	Seminole	49.438	49.519	0.081	OK133	Seminole-Gowton complex, 0 to 12 percent slopes	0.000	0.000	0.045	0.000	0.002	0.081	0.000	0.000	0.000
Gulf Coast	TX	Seminole	49.519	49.570	0.051	OK133	Eram-Coweta complex, 5 to 12 percent slopes	0.000	0.046	0.000	0.000	0.001	0.051	0.013	0.000	0.000
Gulf Coast	TX	Seminole	49.570	49.630	0.060	OK133	Gowton fine sandy loam, 0 to 1 percent slopes, frequently flooded	0.000	0.000	0.000	0.000	0.001	0.060	0.000	0.000	0.000
Gulf Coast	TX	Seminole	49.630	49.657	0.026	OK133	Gowton loam, 0 to 1 percent slopes, occasionally flooded	0.000	0.000	0.000	0.026	0.001	0.026	0.000	0.000	0.000
Gulf Coast	TX	Seminole	49.657	49.686	0.029	OK133	Gowton fine sandy loam, 0 to 1 percent slopes, frequently flooded	0.000	0.000	0.000	0.000	0.001	0.029	0.000	0.000	0.000
Gulf Coast	TX	Seminole	49.686	49.739	0.053	OK133	Gowton loam, 0 to 1 percent slopes, occasionally flooded	0.000	0.000	0.000	0.053	0.001	0.053	0.000	0.000	0.000
Gulf Coast	TX	Seminole	49.739	49.758	0.019	OK133	Okemah silt loam, 1 to 3 percent slopes	0.000	0.000	0.001	0.019	0.000	0.019	0.000	0.000	0.000
Gulf Coast	TX	Seminole	49.758	49.906	0.148	OK133	Eram-Coweta complex, 5 to 12 percent slopes	0.000	0.134	0.000	0.000	0.003	0.148	0.037	0.000	0.000
Gulf	TX	Seminol	49.906	49.910	0.003	OK133	Niotaze-Darnell complex, 8 to 30 percent slopes	0.000	0.003	0.000	0.000	0.000	0.003	0.003	0.000	0.000

Appendix K – Soils by Milepost – Gulf Coast Section

Pipeline Segment		County	Beginning Milepost	Ending Milepost	Miles	Soil Series	Soil Series Name	Wind (miles)	water (miles)	Low revegetation potential (miles)	Prime Farmland (miles)	Hydric (miles)	Compaction Prone (miles)	Stony-Rocky (miles)	Shallow Bedrock (miles)	Droughty (miles)
Coast		e														
Gulf Coast	TX	Seminole	49.910	50.067	0.158	OK133	Prue loam, 3 to 5 percent slopes	0.000	0.000	0.008	0.158	0.003	0.158	0.000	0.000	0.000
Gulf Coast	TX	Seminole	50.067	50.196	0.129	OK133	Prue loam, 1 to 3 percent slopes	0.000	0.000	0.006	0.129	0.003	0.129	0.000	0.000	0.000
Gulf Coast	TX	Seminole	50.196	50.297	0.101	OK133	Okemah-Pharoah complex, 0 to 3 percent slopes	0.000	0.000	0.030	0.101	0.002	0.101	0.005	0.000	0.000
Gulf Coast	TX	Seminole	50.297	50.406	0.109	OK133	Seminole-Gowton complex, 0 to 12 percent slopes	0.000	0.000	0.060	0.000	0.002	0.109	0.000	0.000	0.000
Gulf Coast	TX	Seminole	50.406	50.470	0.064	OK133	Okemah silt loam, 1 to 3 percent slopes	0.000	0.000	0.003	0.064	0.001	0.064	0.000	0.000	0.000
Gulf Coast	TX	Seminole	50.470	50.527	0.057	OK133	Gowton loam, 0 to 1 percent slopes, occasionally flooded	0.000	0.000	0.000	0.057	0.001	0.057	0.000	0.000	0.000
Gulf Coast	TX	Seminole	50.527	50.576	0.049	OK133	Gowton fine sandy loam, 0 to 1 percent slopes, frequently flooded	0.000	0.000	0.000	0.000	0.001	0.049	0.000	0.000	0.000
Gulf Coast	TX	Seminole	50.576	50.789	0.213	OK133	Niotaze-Darnell complex, 8 to 30 percent slopes	0.000	0.213	0.000	0.000	0.004	0.213	0.213	0.000	0.000
Gulf Coast	TX	Seminole	50.789	50.988	0.199	OK133	Okemah-Pharoah complex, 0 to 3 percent slopes	0.000	0.000	0.060	0.199	0.004	0.199	0.010	0.000	0.000
Gulf Coast	TX	Seminole	50.988	51.185	0.197	OK133	Okemah silt loam, 0 to 1 percent slopes	0.000	0.000	0.010	0.197	0.004	0.197	0.000	0.000	0.000
Gulf Coast	TX	Seminole	51.185	51.532	0.347	OK133	Gowton loam, 0 to 1 percent slopes, occasionally flooded	0.000	0.000	0.000	0.347	0.007	0.347	0.000	0.000	0.000
Gulf Coast	TX	Seminole	51.532	51.835	0.303	OK133	Okemah silt loam, 0 to 1 percent slopes	0.000	0.000	0.015	0.303	0.006	0.303	0.000	0.000	0.000
Gulf Coast	TX	Seminole	51.835	51.861	0.026	OK133	Okemah silt loam, 1 to 3 percent slopes	0.000	0.000	0.001	0.026	0.001	0.026	0.000	0.000	0.000
Gulf Coast	TX	Seminole	51.861	52.345	0.483	OK133	Dennis loam, 3 to 5 percent slopes	0.000	0.000	0.024	0.483	0.010	0.483	0.000	0.000	0.000
Gulf Coast	TX	Seminole	52.345	52.549	0.204	OK133	Okemah silt loam, 1 to 3 percent slopes	0.000	0.000	0.010	0.204	0.004	0.204	0.000	0.000	0.000
Gulf Coast	TX	Seminole	52.549	52.792	0.243	OK133	Dennis loam, 3 to 5 percent slopes	0.000	0.000	0.012	0.243	0.005	0.243	0.000	0.000	0.000
Gulf Coast	TX	Seminole	52.792	53.267	0.476	OK133	Seminole-Gowton complex, 0 to 12 percent slopes	0.000	0.000	0.262	0.000	0.010	0.476	0.000	0.000	0.000
Gulf Coast	TX	Seminole	53.267	53.293	0.026	OK133	Grainola and Aydelotte soils, 3 to 8 percent slopes, severely eroded	0.000	0.000	0.002	0.000	0.001	0.026	0.012	0.000	0.001
Gulf Coast	TX	Seminole	53.293	53.668	0.375	OK133	Okemah silt loam, 1 to 3 percent slopes	0.000	0.000	0.019	0.375	0.008	0.375	0.000	0.000	0.000
Gulf Coast	TX	Seminole	53.668	53.708	0.040	OK133	Bates loam, 1 to 3 percent slopes	0.000	0.000	0.004	0.040	0.001	0.040	0.032	0.000	0.000
Gulf Coast	TX	Seminole	53.708	53.836	0.128	OK133	Seminole-Gowton complex, 0 to 12 percent slopes	0.000	0.000	0.071	0.000	0.003	0.128	0.000	0.000	0.000
Gulf	TX	Seminol	53.836	53.871	0.034	OK133	Bates loam, 3 to 5 percent slopes	0.000	0.000	0.003	0.034	0.001	0.034	0.028	0.000	0.000

Appendix K – Soils by Milepost – Gulf Coast Section

Pipeline Segment		County	Beginning Milepost	Ending Milepost	Miles	Soil Series	Soil Series Name	Wind (miles)	water (miles)	Low revegetation potential (miles)	Prime Farmland (miles)	Hydric (miles)	Compaction Prone (miles)	Stony-Rocky (miles)	Shallow Bedrock (miles)	Droughty (miles)
Coast		e														
Gulf Coast	TX	Seminole	53.871	53.911	0.040	OK133	Seminole-Gowton complex, 0 to 12 percent slopes	0.000	0.000	0.022	0.000	0.001	0.040	0.000	0.000	0.000
Gulf Coast	TX	Seminole	53.911	53.980	0.069	OK133	Bates loam, 3 to 5 percent slopes	0.000	0.000	0.006	0.069	0.001	0.069	0.057	0.000	0.000
Gulf Coast	TX	Seminole	53.980	54.083	0.103	OK133	Seminole-Gowton complex, 0 to 12 percent slopes	0.000	0.000	0.057	0.000	0.002	0.103	0.000	0.000	0.000
Gulf Coast	TX	Seminole	54.083	54.318	0.235	OK133	Okemah silt loam, 1 to 3 percent slopes	0.000	0.000	0.012	0.235	0.005	0.235	0.000	0.000	0.000
Gulf Coast	TX	Seminole	54.318	54.412	0.094	OK133	Dennis loam, 3 to 5 percent slopes	0.000	0.000	0.005	0.094	0.002	0.094	0.000	0.000	0.000
Gulf Coast	TX	Seminole	54.412	54.548	0.136	OK133	Okemah silt loam, 1 to 3 percent slopes	0.000	0.000	0.007	0.136	0.003	0.136	0.000	0.000	0.000
Gulf Coast	TX	Seminole	54.548	54.753	0.205	OK133	Bates loam, 1 to 3 percent slopes	0.000	0.000	0.021	0.205	0.004	0.205	0.164	0.000	0.000
Gulf Coast	TX	Seminole	54.753	54.862	0.109	OK133	Dennis loam, 3 to 5 percent slopes	0.000	0.000	0.005	0.109	0.002	0.109	0.000	0.000	0.000
Gulf Coast	TX	Seminole	54.862	55.043	0.182	OK133	Bates loam, 1 to 3 percent slopes	0.000	0.000	0.018	0.182	0.004	0.182	0.145	0.000	0.000
Gulf Coast	TX	Seminole	55.043	55.092	0.049	OK133	Seminole-Gowton complex, 0 to 12 percent slopes	0.000	0.000	0.027	0.000	0.001	0.049	0.000	0.000	0.000
Gulf Coast	TX	Seminole	55.092	55.124	0.032	OK133	Bates loam, 3 to 5 percent slopes	0.000	0.000	0.003	0.032	0.001	0.032	0.026	0.000	0.000
Gulf Coast	TX	Seminole	55.124	55.125	0.001	OK133	Seminole-Gowton complex, 0 to 12 percent slopes	0.000	0.000	0.001	0.000	0.000	0.001	0.000	0.000	0.000
Gulf Coast	TX	Seminole	55.125	55.203	0.078	OK133	Bates loam, 3 to 5 percent slopes	0.000	0.000	0.006	0.078	0.002	0.078	0.064	0.000	0.000
Gulf Coast	TX	Seminole	55.203	55.389	0.186	OK133	Bates loam, 1 to 3 percent slopes	0.000	0.000	0.019	0.186	0.004	0.186	0.148	0.000	0.000
Gulf Coast	TX	Seminole	55.389	55.468	0.079	OK133	Seminole, Chickasha, and Mulhall soils, 3 to 8 percent slopes, severely eroded	0.000	0.000	0.032	0.000	0.002	0.079	0.014	0.000	0.000
Gulf Coast	TX	Seminole	55.468	55.737	0.268	OK133	Bates loam, 1 to 3 percent slopes	0.000	0.000	0.027	0.268	0.005	0.268	0.215	0.000	0.000
Gulf Coast	TX	Seminole	55.737	55.826	0.089	OK133	Bates-Coweta complex, 3 to 5 percent slopes	0.000	0.000	0.000	0.089	0.002	0.089	0.089	0.000	0.000
Gulf Coast	TX	Seminole	55.826	56.025	0.199	OK133	Eram-Coweta complex, 5 to 12 percent slopes	0.000	0.179	0.000	0.000	0.004	0.199	0.050	0.000	0.000
Gulf Coast	TX	Seminole	56.025	56.278	0.253	OK133	Prue loam, 3 to 5 percent slopes	0.000	0.000	0.013	0.253	0.005	0.253	0.000	0.000	0.000
Gulf Coast	TX	Seminole	56.278	56.325	0.047	OK133	Okemah-Pharoah complex, 0 to 3 percent slopes	0.000	0.000	0.014	0.047	0.001	0.047	0.002	0.000	0.000
Gulf Coast	TX	Seminole	56.325	56.521	0.196	OK133	Okemah silt loam, 1 to 3 percent slopes	0.000	0.000	0.010	0.196	0.004	0.196	0.000	0.000	0.000
Gulf	TX	Seminol	56.521	56.598	0.077	OK133	Okemah-Pharoah complex, 0 to 3 percent slopes	0.000	0.000	0.023	0.077	0.002	0.077	0.004	0.000	0.000

Appendix K – Soils by Milepost – Gulf Coast Section

Pipeline Segment		County	Beginning Milepost	Ending Milepost	Miles	Soil Series	Soil Series Name	Wind (miles)	water (miles)	Low revegetation potential (miles)	Prime Farmland (miles)	Hydric (miles)	Compaction Prone (miles)	Stony-Rocky (miles)	Shallow Bedrock (miles)	Droughty (miles)
Coast		e														
Gulf Coast	TX	Seminole	56.598	56.656	0.058	OK133	Seminole-Gowton complex, 0 to 12 percent slopes	0.000	0.000	0.032	0.000	0.001	0.058	0.000	0.000	0.000
Gulf Coast	TX	Seminole	56.656	56.876	0.221	OK133	Okemah-Pharoah complex, 0 to 3 percent slopes	0.000	0.000	0.066	0.221	0.004	0.221	0.011	0.000	0.000
Gulf Coast	TX	Seminole	56.876	57.078	0.202	OK133	Bates-Coweta complex, 3 to 5 percent slopes	0.000	0.000	0.000	0.202	0.004	0.202	0.202	0.000	0.000
Gulf Coast	TX	Seminole	57.078	57.222	0.143	OK133	Okemah-Pharoah complex, 0 to 3 percent slopes	0.000	0.000	0.043	0.143	0.003	0.143	0.007	0.000	0.000
Gulf Coast	TX	Seminole	57.222	57.417	0.195	OK133	Stephenville fine sandy loam, 3 to 5 percent slopes	0.000	0.000	0.000	0.195	0.004	0.195	0.195	0.000	0.000
Gulf Coast	TX	Seminole	57.417	57.449	0.032	OK133	Stephenville fine sandy loam, 1 to 3 percent slopes	0.000	0.000	0.000	0.032	0.001	0.032	0.032	0.000	0.030
Gulf Coast	TX	Seminole	57.449	57.629	0.181	OK133	Stephenville fine sandy loam, 3 to 5 percent slopes	0.000	0.000	0.000	0.181	0.004	0.181	0.181	0.000	0.000
Gulf Coast	TX	Seminole	57.629	57.664	0.034	OK133	Stephenville-Darnell complex, 5 to 15 percent slopes	0.000	0.021	0.000	0.000	0.001	0.034	0.031	0.000	0.017
Gulf Coast	TX	Seminole	57.664	57.868	0.204	OK133	Stephenville fine sandy loam, 3 to 5 percent slopes	0.000	0.000	0.000	0.204	0.004	0.204	0.204	0.000	0.000
Gulf Coast	TX	Seminole	57.868	57.936	0.068	OK133	Stephenville fine sandy loam, 1 to 3 percent slopes	0.000	0.000	0.000	0.068	0.001	0.068	0.068	0.000	0.064
Gulf Coast	TX	Seminole	57.936	58.180	0.244	OK133	Stephenville-Darnell complex, 5 to 15 percent slopes	0.000	0.146	0.000	0.000	0.005	0.244	0.220	0.000	0.122
Gulf Coast	TX	Seminole	58.180	58.225	0.046	OK133	Niotaze-Darnell complex, 8 to 30 percent slopes	0.000	0.046	0.000	0.000	0.001	0.046	0.046	0.000	0.000
Gulf Coast	TX	Seminole	58.225	58.378	0.152	OK133	Konawa fine sandy loam, 3 to 8 percent slopes, gullied	0.008	0.000	0.000	0.000	0.003	0.152	0.000	0.000	0.152
Gulf Coast	TX	Seminole	58.378	58.501	0.123	OK133	Tullahassee fine sandy loam, 0 to 1 percent slopes, frequently flooded	0.000	0.000	0.000	0.000	0.002	0.123	0.000	0.000	0.000
Gulf Coast	TX	Seminole	58.501	58.855	0.354	OK133	Ustibuck clay, 0 to 1 percent slopes, occasionally flooded	0.000	0.000	0.000	0.354	0.007	0.354	0.000	0.000	0.000
Gulf Coast	TX	Seminole	58.855	58.875	0.020	OK133	Pulaski fine sandy loam, 0 to 1 percent slopes, occasionally flooded	0.000	0.000	0.000	0.020	0.000	0.020	0.000	0.000	0.000
Gulf Coast	TX	Seminole	58.875	58.949	0.074	OK133	Ustibuck clay, 0 to 1 percent slopes, occasionally flooded	0.000	0.000	0.000	0.074	0.001	0.074	0.000	0.000	0.000
Gulf Coast	TX	Seminole	58.949	59.031	0.082	OK133	Pulaski fine sandy loam, 0 to 1 percent slopes, occasionally flooded	0.000	0.000	0.000	0.082	0.002	0.082	0.000	0.000	0.000
Gulf Coast	TX	Seminole	59.031	59.085	0.054	OK133	Konawa fine sandy loam, 3 to 8 percent slopes, gullied	0.003	0.000	0.000	0.000	0.001	0.054	0.000	0.000	0.054
Gulf Coast	TX	Seminole	59.085	59.164	0.079	OK133	Gowton loam, 0 to 1 percent slopes, occasionally flooded	0.000	0.000	0.000	0.079	0.002	0.079	0.000	0.000	0.000
Gulf Coast	OK	Hughes	59.164	59.232	0.068	OK063	Verdigris silt loam, 0 to 1 percent slopes, occasionally flooded	0.000	0.000	0.000	0.068	0.001	0.068	0.000	0.000	0.000
Gulf	OK	Hughes	59.232	59.307	0.075	OK063	Wann loam, 0 to 1 percent slopes	0.000	0.075	0.000	0.000	0.001	0.075	0.075	0.049	0.000

Appendix K – Soils by Milepost – Gulf Coast Section

Pipeline Segment		County	Beginning Milepost	Ending Milepost	Miles	Soil Series	Soil Series Name	Wind (miles)	water (miles)	Low revegetation potential (miles)	Prime Farmland (miles)	Hydric (miles)	Compaction Prone (miles)	Stony-Rocky (miles)	Shallow Bedrock (miles)	Droughty (miles)
Coast																
Gulf Coast	OK	Hughes	59.307	59.394	0.088	OK063	Bates fine sandy loam, 3 to 5 percent slopes	0.000	0.000	0.000	0.088	0.002	0.088	0.088	0.000	0.000
Gulf Coast	OK	Hughes	59.394	59.558	0.164	OK063	Dennis loam, 2 to 8 percent slopes, severely eroded	0.000	0.000	0.000	0.000	0.003	0.164	0.000	0.000	0.000
Gulf Coast	OK	Hughes	59.558	59.693	0.136	OK063	Dennis loam, 1 to 3 percent slopes	0.000	0.000	0.000	0.136	0.003	0.136	0.000	0.000	0.000
Gulf Coast	OK	Hughes	59.693	59.802	0.109	OK063	Bates-Coweta complex, 3 to 5 percent slopes	0.000	0.000	0.000	0.105	0.002	0.109	0.105	0.000	0.000
Gulf Coast	OK	Hughes	59.802	59.868	0.066	OK063	Wann loam, 0 to 1 percent slopes	0.000	0.066	0.000	0.000	0.001	0.066	0.066	0.043	0.000
Gulf Coast	OK	Hughes	59.868	60.743	0.875	OK063	Verdigris silt loam, 0 to 1 percent slopes, occasionally flooded	0.000	0.000	0.000	0.875	0.018	0.875	0.000	0.000	0.000
Gulf Coast	OK	Hughes	60.743	60.764	0.021	OK063	Kamie fine sandy loam, 1 to 3 percent slopes	0.000	0.000	0.000	0.021	0.000	0.021	0.000	0.000	0.000
Gulf Coast	OK	Hughes	60.764	60.841	0.078	OK063	Eram-Verdigris complex, 0 to 20 percent slopes	0.000	0.043	0.000	0.000	0.002	0.078	0.000	0.000	0.000
Gulf Coast	OK	Hughes	60.841	60.900	0.058	OK063	Kamie fine sandy loam, 1 to 3 percent slopes	0.000	0.000	0.000	0.058	0.001	0.058	0.000	0.000	0.000
Gulf Coast	OK	Hughes	60.900	61.126	0.227	OK063	Eram-Verdigris complex, 0 to 20 percent slopes	0.000	0.125	0.000	0.000	0.005	0.227	0.000	0.000	0.000
Gulf Coast	OK	Hughes	61.126	61.479	0.353	OK063	Dennis loam, 3 to 5 percent slopes	0.000	0.000	0.000	0.353	0.007	0.353	0.000	0.000	0.000
Gulf Coast	OK	Hughes	61.479	61.514	0.034	OK063	Eram-Verdigris complex, 0 to 20 percent slopes	0.000	0.019	0.000	0.000	0.001	0.034	0.000	0.000	0.000
Gulf Coast	OK	Hughes	61.514	61.679	0.165	OK063	Talihina-Coweta complex, 5 to 20 percent slopes, very stony	0.000	0.165	0.000	0.000	0.003	0.165	0.165	0.000	0.000
Gulf Coast	OK	Hughes	61.679	61.905	0.227	OK063	Wann loam, 0 to 1 percent slopes	0.000	0.227	0.000	0.000	0.005	0.227	0.227	0.147	0.000
Gulf Coast	OK	Hughes	61.905	61.959	0.054	OK063	Talihina-Coweta complex, 5 to 20 percent slopes, very stony	0.000	0.054	0.000	0.000	0.001	0.054	0.054	0.000	0.000
Gulf Coast	OK	Hughes	61.959	61.989	0.031	OK063	Wann loam, 0 to 1 percent slopes	0.000	0.031	0.000	0.000	0.001	0.031	0.031	0.020	0.000
Gulf Coast	OK	Hughes	61.989	62.054	0.064	OK063	Talihina-Coweta complex, 5 to 20 percent slopes, very stony	0.000	0.064	0.000	0.000	0.001	0.064	0.064	0.000	0.000
Gulf Coast	OK	Hughes	62.054	62.321	0.267	OK063	Wann loam, 0 to 1 percent slopes	0.000	0.267	0.000	0.000	0.005	0.267	0.267	0.174	0.000
Gulf Coast	OK	Hughes	62.321	62.366	0.046	OK063	Talihina-Coweta complex, 5 to 20 percent slopes, very stony	0.000	0.046	0.000	0.000	0.001	0.046	0.046	0.000	0.000
Gulf Coast	OK	Hughes	62.366	62.429	0.063	OK063	Bates-Coweta complex, 3 to 5 percent slopes	0.000	0.000	0.000	0.061	0.001	0.063	0.061	0.000	0.000
Gulf Coast	OK	Hughes	62.429	62.462	0.032	OK063	Dennis loam, 3 to 5 percent slopes	0.000	0.000	0.000	0.032	0.001	0.032	0.000	0.000	0.000
Gulf	OK	Hughes	62.462	62.558	0.096	OK063	Dennis loam, 2 to 8 percent slopes, severely eroded	0.000	0.000	0.000	0.000	0.002	0.096	0.000	0.000	0.000

Appendix K – Soils by Milepost – Gulf Coast Section

Pipeline Segment		County	Beginning Milepost	Ending Milepost	Miles	Soil Series	Soil Series Name	Wind (miles)	water (miles)	Low revegetation potential (miles)	Prime Farmland (miles)	Hydric (miles)	Compaction Prone (miles)	Stony-Rocky (miles)	Shallow Bedrock (miles)	Droughty (miles)
Coast																
Gulf Coast	OK	Hughes	62.558	62.558	0.000	OK063	Dennis loam, 3 to 5 percent slopes	0.000	0.000	0.000	0.000	0.000	0.000	0.000	0.000	0.000
Gulf Coast	OK	Hughes	62.558	62.595	0.037	OK063	Dennis loam, 2 to 8 percent slopes, severely eroded	0.000	0.000	0.000	0.000	0.001	0.037	0.000	0.000	0.000
Gulf Coast	OK	Hughes	62.595	62.643	0.048	OK063	Dennis loam, 3 to 5 percent slopes	0.000	0.000	0.000	0.048	0.001	0.048	0.000	0.000	0.000
Gulf Coast	OK	Hughes	62.643	62.851	0.208	OK063	Talihina-Coweta complex, 5 to 20 percent slopes, very stony	0.000	0.208	0.000	0.000	0.004	0.208	0.208	0.000	0.000
Gulf Coast	OK	Hughes	62.851	62.867	0.016	OK063	Bates fine sandy loam, 1 to 3 percent slopes	0.000	0.000	0.000	0.016	0.000	0.016	0.016	0.000	0.000
Gulf Coast	OK	Hughes	62.867	63.028	0.161	OK063	Bates fine sandy loam, 3 to 5 percent slopes	0.000	0.000	0.000	0.161	0.003	0.161	0.161	0.000	0.000
Gulf Coast	OK	Hughes	63.028	63.213	0.185	OK063	Dennis loam, 2 to 8 percent slopes, severely eroded	0.000	0.000	0.000	0.000	0.004	0.185	0.000	0.000	0.000
Gulf Coast	OK	Hughes	63.213	63.324	0.111	OK063	Dennis loam, 3 to 5 percent slopes, eroded	0.000	0.000	0.000	0.000	0.002	0.111	0.000	0.000	0.000
Gulf Coast	OK	Hughes	63.324	63.407	0.084	OK063	Dennis loam, 2 to 8 percent slopes, severely eroded	0.000	0.000	0.000	0.000	0.002	0.084	0.000	0.000	0.000
Gulf Coast	OK	Hughes	63.407	63.429	0.022	OK063	Bates fine sandy loam, 3 to 5 percent slopes, eroded	0.000	0.000	0.000	0.000	0.000	0.022	0.022	0.000	0.000
Gulf Coast	OK	Hughes	63.429	63.601	0.171	OK063	Bates fine sandy loam, 1 to 3 percent slopes	0.000	0.000	0.000	0.171	0.003	0.171	0.171	0.000	0.000
Gulf Coast	OK	Hughes	63.601	63.755	0.154	OK063	Talihina-Coweta complex, 5 to 20 percent slopes, very stony	0.000	0.154	0.000	0.000	0.003	0.154	0.154	0.000	0.000
Gulf Coast	OK	Hughes	63.755	63.821	0.066	OK063	Bates fine sandy loam, 1 to 3 percent slopes	0.000	0.000	0.000	0.066	0.001	0.066	0.066	0.000	0.000
Gulf Coast	OK	Hughes	63.821	63.950	0.130	OK063	Wann loam, 0 to 1 percent slopes	0.000	0.130	0.000	0.000	0.003	0.130	0.130	0.084	0.000
Gulf Coast	OK	Hughes	63.950	64.051	0.100	OK063	Talihina-Coweta complex, 5 to 20 percent slopes, very stony	0.000	0.100	0.000	0.000	0.002	0.100	0.100	0.000	0.000
Gulf Coast	OK	Hughes	64.051	64.323	0.273	OK063	Dennis loam, 3 to 5 percent slopes	0.000	0.000	0.000	0.273	0.005	0.273	0.000	0.000	0.000
Gulf Coast	OK	Hughes	64.323	64.368	0.045	OK063	Okemah-Pharoah complex, 1 to 3 percent slopes	0.000	0.000	0.009	0.045	0.001	0.045	0.000	0.000	0.000
Gulf Coast	OK	Hughes	64.368	64.446	0.078	OK063	Dennis loam, 1 to 3 percent slopes	0.000	0.000	0.000	0.078	0.002	0.078	0.000	0.000	0.000
Gulf Coast	OK	Hughes	64.446	64.546	0.101	OK063	Dennis loam, 3 to 5 percent slopes	0.000	0.000	0.000	0.101	0.002	0.101	0.000	0.000	0.000
Gulf Coast	OK	Hughes	64.546	64.629	0.083	OK063	Okemah-Pharoah complex, 1 to 3 percent slopes	0.000	0.000	0.017	0.083	0.002	0.083	0.000	0.000	0.000
Gulf Coast	OK	Hughes	64.629	64.856	0.227	OK063	Dennis loam, 1 to 3 percent slopes	0.000	0.000	0.000	0.227	0.005	0.227	0.000	0.000	0.000
Gulf	OK	Hughes	64.856	65.000	0.144	OK063	Talihina-Coweta complex, 5 to 20 percent slopes,	0.000	0.144	0.000	0.000	0.003	0.144	0.144	0.000	0.000

Appendix K – Soils by Milepost – Gulf Coast Section

Pipeline Segment		County	Beginning Milepost	Ending Milepost	Miles	Soil Series	Soil Series Name	Wind (miles)	water (miles)	Low revegetation potential (miles)	Prime Farmland (miles)	Hydric (miles)	Compaction Prone (miles)	Stony-Rocky (miles)	Shallow Bedrock (miles)	Droughty (miles)
Coast							very stony									
Gulf Coast	OK	Hughes	65.000	65.100	0.100	OK063	Wann loam, 0 to 1 percent slopes	0.000	0.100	0.000	0.000	0.002	0.100	0.100	0.065	0.000
Gulf Coast	OK	Hughes	65.100	65.110	0.010	OK063	Dennis loam, 1 to 3 percent slopes	0.000	0.000	0.000	0.010	0.000	0.010	0.000	0.000	0.000
Gulf Coast	OK	Hughes	65.110	65.222	0.112	OK063	Dennis loam, 3 to 5 percent slopes, eroded	0.000	0.000	0.000	0.000	0.002	0.112	0.000	0.000	0.000
Gulf Coast	OK	Hughes	65.222	65.327	0.105	OK063	Dennis loam, 1 to 3 percent slopes	0.000	0.000	0.000	0.105	0.002	0.105	0.000	0.000	0.000
Gulf Coast	OK	Hughes	65.327	65.362	0.035	OK063	Wann loam, 0 to 1 percent slopes	0.000	0.035	0.000	0.000	0.001	0.035	0.035	0.023	0.000
Gulf Coast	OK	Hughes	65.362	65.464	0.102	OK063	Verdigris silt loam, 0 to 2 percent slopes, frequently flooded	0.000	0.000	0.000	0.000	0.002	0.102	0.000	0.000	0.000
Gulf Coast	OK	Hughes	65.464	65.533	0.068	OK063	Wann loam, 0 to 1 percent slopes	0.000	0.068	0.000	0.000	0.001	0.068	0.068	0.044	0.000
Gulf Coast	OK	Hughes	65.533	65.586	0.054	OK063	Bates fine sandy loam, 1 to 3 percent slopes	0.000	0.000	0.000	0.054	0.001	0.054	0.054	0.000	0.000
Gulf Coast	OK	Hughes	65.586	65.698	0.112	OK063	Wann loam, 0 to 1 percent slopes	0.000	0.112	0.000	0.000	0.002	0.112	0.112	0.073	0.000
Gulf Coast	OK	Hughes	65.698	65.741	0.043	OK063	Bates-Coweta complex, 3 to 5 percent slopes	0.000	0.000	0.000	0.042	0.001	0.043	0.042	0.000	0.000
Gulf Coast	OK	Hughes	65.741	65.803	0.062	OK063	Wann loam, 0 to 1 percent slopes	0.000	0.062	0.000	0.000	0.001	0.062	0.062	0.040	0.000
Gulf Coast	OK	Hughes	65.803	66.295	0.493	OK063	Verdigris silt loam, 0 to 1 percent slopes, occasionally flooded	0.000	0.000	0.000	0.493	0.010	0.493	0.000	0.000	0.000
Gulf Coast	OK	Hughes	66.295	66.437	0.141	OK063	Verdigris silt loam, 0 to 2 percent slopes, frequently flooded	0.000	0.000	0.000	0.000	0.003	0.141	0.000	0.000	0.000
Gulf Coast	OK	Hughes	66.437	66.594	0.158	OK063	Verdigris silt loam, 0 to 1 percent slopes, occasionally flooded	0.000	0.000	0.000	0.158	0.003	0.158	0.000	0.000	0.000
Gulf Coast	OK	Hughes	66.594	66.632	0.038	OK063	Verdigris silt loam, 0 to 2 percent slopes, frequently flooded	0.000	0.000	0.000	0.000	0.001	0.038	0.000	0.000	0.000
Gulf Coast	OK	Hughes	66.632	67.431	0.799	OK063	Verdigris silt loam, 0 to 1 percent slopes, occasionally flooded	0.000	0.000	0.000	0.799	0.016	0.799	0.000	0.000	0.000
Gulf Coast	OK	Hughes	67.431	67.492	0.061	OK063	Verdigris silt loam, 0 to 2 percent slopes, frequently flooded	0.000	0.000	0.000	0.000	0.001	0.061	0.000	0.000	0.000
Gulf Coast	OK	Hughes	67.492	67.544	0.052	OK063	Verdigris silt loam, 0 to 1 percent slopes, occasionally flooded	0.000	0.000	0.000	0.052	0.001	0.052	0.000	0.000	0.000
Gulf Coast	OK	Hughes	67.544	67.583	0.039	OK063	Verdigris silt loam, 0 to 2 percent slopes, frequently flooded	0.000	0.000	0.000	0.000	0.001	0.039	0.000	0.000	0.000
Gulf Coast	OK	Hughes	67.583	67.637	0.054	OK063	Osage clay, 0 to 1 percent slopes, occasionally flooded	0.000	0.000	0.000	0.000	0.001	0.054	0.000	0.000	0.000
Gulf Coast	OK	Hughes	67.637	67.690	0.052	OK063	Wann loam, 0 to 1 percent slopes	0.000	0.052	0.000	0.000	0.001	0.052	0.052	0.034	0.000
Gulf	OK	Hughes	67.690	67.937	0.247	OK063	Clearview-Hector complex, 3 to 5 percent slopes	0.000	0.000	0.000	0.247	0.005	0.247	0.062	0.247	0.000

Appendix K – Soils by Milepost – Gulf Coast Section

Pipeline Segment		County	Beginning Milepost	Ending Milepost	Miles	Soil Series	Soil Series Name	Wind (miles)	water (miles)	Low revegetation potential (miles)	Prime Farmland (miles)	Hydric (miles)	Compaction Prone (miles)	Stony-Rocky (miles)	Shallow Bedrock (miles)	Droughty (miles)
Coast																
Gulf Coast	OK	Hughes	67.937	68.003	0.067	OK063	Wann loam, 0 to 1 percent slopes	0.000	0.067	0.000	0.000	0.001	0.067	0.067	0.043	0.000
Gulf Coast	OK	Hughes	68.003	68.453	0.450	OK063	Clearview fine sandy loam, 1 to 3 percent slopes	0.000	0.000	0.000	0.450	0.009	0.450	0.000	0.450	0.000
Gulf Coast	OK	Hughes	68.453	68.489	0.037	OK063	Dennis loam, 1 to 3 percent slopes	0.000	0.000	0.000	0.037	0.001	0.037	0.000	0.000	0.000
Gulf Coast	OK	Hughes	68.489	68.590	0.101	OK063	Clearview fine sandy loam, 1 to 3 percent slopes	0.000	0.000	0.000	0.101	0.002	0.101	0.000	0.101	0.000
Gulf Coast	OK	Hughes	68.590	68.771	0.181	OK063	Bates fine sandy loam, 1 to 3 percent slopes	0.000	0.000	0.000	0.181	0.004	0.181	0.181	0.000	0.000
Gulf Coast	OK	Hughes	68.771	68.951	0.180	OK063	Stidham loamy fine sand, 0 to 2 percent slopes	0.180	0.000	0.000	0.180	0.004	0.180	0.000	0.000	0.180
Gulf Coast	OK	Hughes	68.951	69.387	0.436	OK063	Kamie loamy fine sand, 3 to 8 percent slopes, severely eroded	0.436	0.000	0.000	0.000	0.009	0.436	0.000	0.000	0.436
Gulf Coast	OK	Hughes	69.387	69.464	0.077	OK063	Kamie loamy fine sand, 3 to 8 percent slopes	0.077	0.000	0.000	0.077	0.002	0.077	0.000	0.000	0.077
Gulf Coast	OK	Hughes	69.464	69.659	0.195	OK063	Verdigris silt loam, 0 to 1 percent slopes, occasionally flooded	0.000	0.000	0.000	0.195	0.004	0.195	0.000	0.000	0.000
Gulf Coast	OK	Hughes	69.659	69.929	0.270	OK063	Kamie loamy fine sand, 3 to 8 percent slopes, severely eroded	0.270	0.000	0.000	0.000	0.005	0.270	0.000	0.000	0.270
Gulf Coast	OK	Hughes	69.929	69.963	0.034	OK063	Kamie loamy fine sand, 3 to 8 percent slopes	0.034	0.000	0.000	0.034	0.001	0.034	0.000	0.000	0.034
Gulf Coast	OK	Hughes	69.963	70.006	0.043	OK063	Kamie loamy fine sand, 3 to 8 percent slopes, severely eroded	0.043	0.000	0.000	0.000	0.001	0.043	0.000	0.000	0.043
Gulf Coast	OK	Hughes	70.006	70.218	0.212	OK063	Glentosh fine sand, 0 to 3 percent slopes	0.212	0.000	0.000	0.000	0.004	0.212	0.000	0.000	0.212
Gulf Coast	OK	Hughes	70.218	70.286	0.068	OK063	Wynona clay loam, 0 to 1 percent slopes, occasionally flooded	0.000	0.000	0.000	0.000	0.001	0.068	0.000	0.000	0.000
Gulf Coast	OK	Hughes	70.286	70.610	0.324	OK063	Osage clay, 0 to 1 percent slopes, occasionally flooded	0.000	0.000	0.000	0.000	0.006	0.324	0.000	0.000	0.000
Gulf Coast	OK	Hughes	70.610	70.635	0.026	OK063	Water	0.000	0.000	0.000	0.000	0.001	0.026	0.000	0.000	0.000
Gulf Coast	OK	Hughes	70.635	70.678	0.043	OK063	Verdigris silt loam, 0 to 1 percent slopes, occasionally flooded	0.000	0.000	0.000	0.043	0.001	0.043	0.000	0.000	0.000
Gulf Coast	OK	Hughes	70.678	70.868	0.190	OK063	Wann loam, 0 to 1 percent slopes	0.000	0.190	0.000	0.000	0.004	0.190	0.190	0.124	0.000
Gulf Coast	OK	Hughes	70.868	70.982	0.114	OK063	Clearview fine sandy loam, 3 to 5 percent slopes, eroded	0.000	0.000	0.000	0.000	0.002	0.114	0.000	0.114	0.000
Gulf Coast	OK	Hughes	70.982	71.076	0.094	OK063	Kamie loamy fine sand, 3 to 8 percent slopes, severely eroded	0.094	0.000	0.000	0.000	0.002	0.094	0.000	0.000	0.094
Gulf Coast	OK	Hughes	71.076	71.080	0.003	OK063	Clearview fine sandy loam, 3 to 5 percent slopes, eroded	0.000	0.000	0.000	0.000	0.000	0.003	0.000	0.003	0.000
Gulf	OK	Hughes	71.080	71.187	0.107	OK063	Wann loam, 0 to 1 percent slopes	0.000	0.107	0.000	0.000	0.002	0.107	0.107	0.070	0.000

Appendix K – Soils by Milepost – Gulf Coast Section

Pipeline Segment		County	Beginning Milepost	Ending Milepost	Miles	Soil Series	Soil Series Name	Wind (miles)	water (miles)	Low revegetation potential (miles)	Prime Farmland (miles)	Hydric (miles)	Compaction Prone (miles)	Stony-Rocky (miles)	Shallow Bedrock (miles)	Droughty (miles)
Coast																
Gulf Coast	OK	Hughes	71.187	71.488	0.302	OK063	Clearview fine sandy loam, 3 to 5 percent slopes, eroded	0.000	0.000	0.000	0.000	0.006	0.302	0.000	0.302	0.000
Gulf Coast	OK	Hughes	71.488	71.682	0.193	OK063	Clearview-Hector complex, 3 to 5 percent slopes	0.000	0.000	0.000	0.193	0.004	0.193	0.048	0.193	0.000
Gulf Coast	OK	Hughes	71.682	71.740	0.059	OK063	Clearview fine sandy loam, 3 to 5 percent slopes	0.000	0.000	0.000	0.059	0.001	0.059	0.000	0.059	0.000
Gulf Coast	OK	Hughes	71.740	71.851	0.110	OK063	Clearview fine sandy loam, 3 to 5 percent slopes, eroded	0.000	0.000	0.000	0.000	0.002	0.110	0.000	0.110	0.000
Gulf Coast	OK	Hughes	71.851	72.071	0.220	OK063	Wann loam, 0 to 1 percent slopes	0.000	0.220	0.000	0.000	0.004	0.220	0.220	0.143	0.000
Gulf Coast	OK	Hughes	72.071	72.149	0.079	OK063	Clearview-Hector complex, 3 to 5 percent slopes	0.000	0.000	0.000	0.079	0.002	0.079	0.020	0.079	0.000
Gulf Coast	OK	Hughes	72.149	72.160	0.011	OK063	Wann loam, 0 to 1 percent slopes	0.000	0.011	0.000	0.000	0.000	0.011	0.011	0.007	0.000
Gulf Coast	OK	Hughes	72.160	72.272	0.112	OK063	Clearview-Hector complex, 3 to 5 percent slopes	0.000	0.000	0.000	0.112	0.002	0.112	0.028	0.112	0.000
Gulf Coast	OK	Hughes	72.272	72.334	0.061	OK063	Wann loam, 0 to 1 percent slopes	0.000	0.061	0.000	0.000	0.001	0.061	0.061	0.040	0.000
Gulf Coast	OK	Hughes	72.334	72.431	0.097	OK063	Clearview fine sandy loam, 3 to 5 percent slopes, eroded	0.000	0.000	0.000	0.000	0.002	0.097	0.000	0.097	0.000
Gulf Coast	OK	Hughes	72.431	72.540	0.109	OK063	Wann loam, 0 to 1 percent slopes	0.000	0.109	0.000	0.000	0.002	0.109	0.109	0.071	0.000
Gulf Coast	OK	Hughes	72.540	72.737	0.197	OK063	Clearview-Hector complex, 3 to 5 percent slopes, eroded	0.000	0.000	0.000	0.000	0.004	0.197	0.049	0.197	0.000
Gulf Coast	OK	Hughes	72.737	72.775	0.038	OK063	Wann loam, 0 to 1 percent slopes	0.000	0.038	0.000	0.000	0.001	0.038	0.038	0.025	0.000
Gulf Coast	OK	Hughes	72.775	72.782	0.007	OK063	Clearview-Hector complex, 3 to 5 percent slopes, eroded	0.000	0.000	0.000	0.000	0.000	0.007	0.002	0.007	0.000
Gulf Coast	OK	Hughes	72.782	72.933	0.150	OK063	Clearview fine sandy loam, 3 to 5 percent slopes, eroded	0.000	0.000	0.000	0.000	0.003	0.150	0.000	0.150	0.000
Gulf Coast	OK	Hughes	72.933	73.012	0.080	OK063	Clearview-Hector complex, 3 to 5 percent slopes, eroded	0.000	0.000	0.000	0.000	0.002	0.080	0.020	0.080	0.000
Gulf Coast	OK	Hughes	73.012	73.218	0.205	OK063	Wann loam, 0 to 1 percent slopes	0.000	0.205	0.000	0.000	0.004	0.205	0.205	0.133	0.000
Gulf Coast	OK	Hughes	73.218	73.412	0.194	OK063	Kamie loamy fine sand, 3 to 8 percent slopes, severely eroded	0.194	0.000	0.000	0.000	0.004	0.194	0.000	0.000	0.194
Gulf Coast	OK	Hughes	73.412	73.521	0.109	OK063	Kamie fine sandy loam, 1 to 3 percent slopes	0.000	0.000	0.000	0.109	0.002	0.109	0.000	0.000	0.000
Gulf Coast	OK	Hughes	73.521	73.658	0.138	OK063	Clearview fine sandy loam, 3 to 5 percent slopes	0.000	0.000	0.000	0.138	0.003	0.138	0.000	0.138	0.000
Gulf Coast	OK	Hughes	73.658	74.004	0.346	OK063	Wann loam, 0 to 1 percent slopes	0.000	0.346	0.000	0.000	0.007	0.346	0.346	0.225	0.000
Gulf	OK	Hughes	74.004	74.155	0.151	OK063	Kamie loamy fine sand, 3 to 8 percent slopes	0.151	0.000	0.000	0.151	0.003	0.151	0.000	0.000	0.151

Appendix K – Soils by Milepost – Gulf Coast Section

Pipeline Segment		County	Beginning Milepost	Ending Milepost	Miles	Soil Series	Soil Series Name	Wind (miles)	water (miles)	Low revegetation potential (miles)	Prime Farmland (miles)	Hydric (miles)	Compaction Prone (miles)	Stony-Rocky (miles)	Shallow Bedrock (miles)	Droughty (miles)
Coast																
Gulf Coast	OK	Hughes	74.155	74.231	0.075	OK063	Wann loam, 0 to 1 percent slopes	0.000	0.075	0.000	0.000	0.002	0.075	0.075	0.049	0.000
Gulf Coast	OK	Hughes	74.231	74.297	0.067	OK063	Hector-Endsaw complex, 30 to 45 percent slopes, extremely stony	0.000	0.043	0.000	0.000	0.001	0.067	0.043	0.030	0.000
Gulf Coast	OK	Hughes	74.297	74.735	0.438	OK063	Water	0.000	0.000	0.000	0.000	0.009	0.438	0.000	0.000	0.000
Gulf Coast	OK	Hughes	74.735	74.875	0.140	OK063	Kiomatia loamy fine sand, 0 to 1 percent slopes, occasionally flooded	0.140	0.000	0.000	0.000	0.003	0.140	0.000	0.000	0.140
Gulf Coast	OK	Hughes	74.875	74.984	0.109	OK063	Larton-Glentosh complex, 8 to 20 percent slopes	0.093	0.071	0.000	0.000	0.002	0.109	0.000	0.000	0.093
Gulf Coast	OK	Hughes	74.984	75.015	0.031	OK063	Hector-Endsaw complex, 30 to 45 percent slopes, extremely stony	0.000	0.020	0.000	0.000	0.001	0.031	0.020	0.014	0.000
Gulf Coast	OK	Hughes	75.015	75.308	0.294	OK063	Wann loam, 0 to 1 percent slopes	0.000	0.294	0.000	0.000	0.006	0.294	0.294	0.191	0.000
Gulf Coast	OK	Hughes	75.308	75.463	0.155	OK063	Kamie loamy fine sand, 3 to 8 percent slopes	0.155	0.000	0.000	0.155	0.003	0.155	0.000	0.000	0.155
Gulf Coast	OK	Hughes	75.463	75.495	0.032	OK063	Larton-Glentosh complex, 8 to 20 percent slopes	0.027	0.020	0.000	0.000	0.001	0.032	0.000	0.000	0.027
Gulf Coast	OK	Hughes	75.495	75.514	0.019	OK063	Kamie loamy fine sand, 3 to 8 percent slopes	0.019	0.000	0.000	0.019	0.000	0.019	0.000	0.000	0.019
Gulf Coast	OK	Hughes	75.514	75.555	0.041	OK063	Kamie loamy fine sand, 3 to 8 percent slopes, severely eroded	0.041	0.000	0.000	0.000	0.001	0.041	0.000	0.000	0.041
Gulf Coast	OK	Hughes	75.555	75.741	0.186	OK063	Kamie loamy fine sand, 3 to 8 percent slopes	0.186	0.000	0.000	0.186	0.004	0.186	0.000	0.000	0.186
Gulf Coast	OK	Hughes	75.741	75.825	0.085	OK063	Kamie loamy fine sand, 3 to 8 percent slopes, severely eroded	0.085	0.000	0.000	0.000	0.002	0.085	0.000	0.000	0.085
Gulf Coast	OK	Hughes	75.825	75.891	0.066	OK063	Choska very fine sandy loam, 0 to 1 percent slopes, rarely flooded	0.000	0.000	0.000	0.066	0.001	0.066	0.000	0.000	0.066
Gulf Coast	OK	Hughes	75.891	75.928	0.037	OK063	Verdigris silt loam, 0 to 2 percent slopes, frequently flooded	0.000	0.000	0.000	0.000	0.001	0.037	0.000	0.000	0.000
Gulf Coast	OK	Hughes	75.928	76.006	0.078	OK063	Choska very fine sandy loam, 0 to 1 percent slopes, rarely flooded	0.000	0.000	0.000	0.078	0.002	0.078	0.000	0.000	0.078
Gulf Coast	OK	Hughes	76.006	76.051	0.046	OK063	Kamie loamy fine sand, 3 to 8 percent slopes	0.046	0.000	0.000	0.046	0.001	0.046	0.000	0.000	0.046
Gulf Coast	OK	Hughes	76.051	76.175	0.124	OK063	Wann loam, 0 to 1 percent slopes	0.000	0.124	0.000	0.000	0.002	0.124	0.124	0.080	0.000
Gulf Coast	OK	Hughes	76.175	76.526	0.351	OK063	Kamie loamy fine sand, 3 to 8 percent slopes, severely eroded	0.351	0.000	0.000	0.000	0.007	0.351	0.000	0.000	0.351
Gulf Coast	OK	Hughes	76.526	76.641	0.115	OK063	Choska very fine sandy loam, 0 to 1 percent slopes, rarely flooded	0.000	0.000	0.000	0.115	0.002	0.115	0.000	0.000	0.115
Gulf Coast	OK	Hughes	76.641	76.649	0.009	OK063	Wann loam, 0 to 1 percent slopes	0.000	0.009	0.000	0.000	0.000	0.009	0.009	0.006	0.000
Gulf	OK	Hughes	76.649	76.744	0.095	OK063	Kamie loamy fine sand, 3 to 8 percent slopes,	0.095	0.000	0.000	0.000	0.002	0.095	0.000	0.000	0.095

Appendix K – Soils by Milepost – Gulf Coast Section

Pipeline Segment		County	Beginning Milepost	Ending Milepost	Miles	Soil Series	Soil Series Name	Wind (miles)	water (miles)	Low revegetation potential (miles)	Prime Farmland (miles)	Hydric (miles)	Compaction Prone (miles)	Stony-Rocky (miles)	Shallow Bedrock (miles)	Droughty (miles)
Coast							severely eroded									
Gulf Coast	OK	Hughes	76.744	76.783	0.039	OK063	Kamie loamy fine sand, 3 to 8 percent slopes	0.039	0.000	0.000	0.039	0.001	0.039	0.000	0.000	0.039
Gulf Coast	OK	Hughes	76.783	76.887	0.104	OK063	Kamie loamy fine sand, 3 to 8 percent slopes, severely eroded	0.104	0.000	0.000	0.000	0.002	0.104	0.000	0.000	0.104
Gulf Coast	OK	Hughes	76.887	77.024	0.136	OK063	Kamie loamy fine sand, 3 to 8 percent slopes	0.136	0.000	0.000	0.136	0.003	0.136	0.000	0.000	0.136
Gulf Coast	OK	Hughes	77.024	77.087	0.064	OK063	Okay loam, 1 to 3 percent slopes	0.000	0.000	0.000	0.064	0.001	0.064	0.000	0.000	0.000
Gulf Coast	OK	Hughes	77.087	77.189	0.102	OK063	Kamie fine sandy loam, 1 to 3 percent slopes	0.000	0.000	0.000	0.102	0.002	0.102	0.000	0.000	0.000
Gulf Coast	OK	Hughes	77.189	77.310	0.121	OK063	Parsons silt loam, 0 to 1 percent slopes	0.000	0.000	0.000	0.121	0.002	0.121	0.000	0.000	0.000
Gulf Coast	OK	Hughes	77.310	77.407	0.097	OK063	Bates fine sandy loam, 1 to 3 percent slopes	0.000	0.000	0.000	0.097	0.002	0.097	0.097	0.000	0.000
Gulf Coast	OK	Hughes	77.407	77.468	0.061	OK063	Dennis loam, 2 to 8 percent slopes, severely eroded	0.000	0.000	0.000	0.000	0.001	0.061	0.000	0.000	0.000
Gulf Coast	OK	Hughes	77.468	77.674	0.206	OK063	Dennis loam, 1 to 3 percent slopes	0.000	0.000	0.000	0.206	0.004	0.206	0.000	0.000	0.000
Gulf Coast	OK	Hughes	77.674	77.800	0.126	OK063	Dennis loam, 2 to 8 percent slopes, severely eroded	0.000	0.000	0.000	0.000	0.003	0.126	0.000	0.000	0.000
Gulf Coast	OK	Hughes	77.800	78.026	0.226	OK063	Bates fine sandy loam, 1 to 3 percent slopes	0.000	0.000	0.000	0.226	0.005	0.226	0.226	0.000	0.000
Gulf Coast	OK	Hughes	78.026	78.133	0.107	OK063	Talihina-Coweta complex, 5 to 20 percent slopes, very stony	0.000	0.107	0.000	0.000	0.002	0.107	0.107	0.000	0.000
Gulf Coast	OK	Hughes	78.133	78.219	0.086	OK063	Dennis loam, 2 to 8 percent slopes, severely eroded	0.000	0.000	0.000	0.000	0.002	0.086	0.000	0.000	0.000
Gulf Coast	OK	Hughes	78.219	78.323	0.104	OK063	Dennis loam, 1 to 3 percent slopes	0.000	0.000	0.000	0.104	0.002	0.104	0.000	0.000	0.000
Gulf Coast	OK	Hughes	78.323	78.403	0.080	OK063	Eram-Verdigris complex, 0 to 20 percent slopes	0.000	0.044	0.000	0.000	0.002	0.080	0.000	0.000	0.000
Gulf Coast	OK	Hughes	78.403	78.483	0.080	OK063	Parsons silt loam, 0 to 1 percent slopes	0.000	0.000	0.000	0.080	0.002	0.080	0.000	0.000	0.000
Gulf Coast	OK	Hughes	78.483	78.534	0.052	OK063	Eram-Verdigris complex, 0 to 20 percent slopes	0.000	0.028	0.000	0.000	0.001	0.052	0.000	0.000	0.000
Gulf Coast	OK	Hughes	78.534	78.575	0.041	OK063	Dennis loam, 1 to 3 percent slopes	0.000	0.000	0.000	0.041	0.001	0.041	0.000	0.000	0.000
Gulf Coast	OK	Hughes	78.575	78.727	0.152	OK063	Dennis loam, 3 to 5 percent slopes, eroded	0.000	0.000	0.000	0.000	0.003	0.152	0.000	0.000	0.000
Gulf Coast	OK	Hughes	78.727	78.816	0.088	OK063	Bates fine sandy loam, 1 to 3 percent slopes	0.000	0.000	0.000	0.088	0.002	0.088	0.088	0.000	0.000
Gulf Coast	OK	Hughes	78.816	78.868	0.053	OK063	Dennis loam, 2 to 8 percent slopes, severely eroded	0.000	0.000	0.000	0.000	0.001	0.053	0.000	0.000	0.000
Gulf	OK	Hughes	78.868	78.871	0.003	OK063	Kamie loamy fine sand, 3 to 8 percent slopes	0.003	0.000	0.000	0.003	0.000	0.003	0.000	0.000	0.003

Appendix K – Soils by Milepost – Gulf Coast Section

Pipeline Segment		County	Beginning Milepost	Ending Milepost	Miles	Soil Series	Soil Series Name	Wind (miles)	water (miles)	Low revegetation potential (miles)	Prime Farmland (miles)	Hydric (miles)	Compaction Prone (miles)	Stony-Rocky (miles)	Shallow Bedrock (miles)	Droughty (miles)
Coast																
Gulf Coast	OK	Hughes	78.871	78.935	0.064	OK063	Dennis loam, 2 to 8 percent slopes, severely eroded	0.000	0.000	0.000	0.000	0.001	0.064	0.000	0.000	0.000
Gulf Coast	OK	Hughes	78.935	79.024	0.089	OK063	Kamie loamy fine sand, 3 to 8 percent slopes	0.089	0.000	0.000	0.089	0.002	0.089	0.000	0.000	0.089
Gulf Coast	OK	Hughes	79.024	79.484	0.460	OK063	Glentosh fine sand, 0 to 3 percent slopes	0.460	0.000	0.000	0.000	0.009	0.460	0.000	0.000	0.460
Gulf Coast	OK	Hughes	79.484	79.586	0.102	OK063	Kamie loamy fine sand, 3 to 8 percent slopes	0.102	0.000	0.000	0.102	0.002	0.102	0.000	0.000	0.102
Gulf Coast	OK	Hughes	79.586	79.635	0.049	OK063	Verdigris silt loam, 0 to 2 percent slopes, frequently flooded	0.000	0.000	0.000	0.000	0.001	0.049	0.000	0.000	0.000
Gulf Coast	OK	Hughes	79.635	79.770	0.135	OK063	Kamie loamy fine sand, 3 to 8 percent slopes	0.135	0.000	0.000	0.135	0.003	0.135	0.000	0.000	0.135
Gulf Coast	OK	Hughes	79.770	79.973	0.204	OK063	Kamie loamy fine sand, 3 to 8 percent slopes, severely eroded	0.204	0.000	0.000	0.000	0.004	0.204	0.000	0.000	0.204
Gulf Coast	OK	Hughes	79.973	80.130	0.156	OK063	Kamie loamy fine sand, 3 to 8 percent slopes	0.156	0.000	0.000	0.156	0.003	0.156	0.000	0.000	0.156
Gulf Coast	OK	Hughes	80.130	80.181	0.051	OK063	Verdigris silt loam, 0 to 2 percent slopes, frequently flooded	0.000	0.000	0.000	0.000	0.001	0.051	0.000	0.000	0.000
Gulf Coast	OK	Hughes	80.181	80.235	0.054	OK063	Kamie loamy fine sand, 3 to 8 percent slopes	0.054	0.000	0.000	0.054	0.001	0.054	0.000	0.000	0.054
Gulf Coast	OK	Hughes	80.235	80.323	0.088	OK063	Kamie loamy fine sand, 3 to 8 percent slopes, severely eroded	0.088	0.000	0.000	0.000	0.002	0.088	0.000	0.000	0.088
Gulf Coast	OK	Hughes	80.323	80.534	0.211	OK063	Kamie loamy fine sand, 3 to 8 percent slopes	0.211	0.000	0.000	0.211	0.004	0.211	0.000	0.000	0.211
Gulf Coast	OK	Hughes	80.534	80.722	0.187	OK063	Kamie loamy fine sand, 3 to 8 percent slopes, severely eroded	0.187	0.000	0.000	0.000	0.004	0.187	0.000	0.000	0.187
Gulf Coast	OK	Hughes	80.722	80.969	0.248	OK063	Stidham loamy fine sand, 0 to 2 percent slopes	0.248	0.000	0.000	0.248	0.005	0.248	0.000	0.000	0.248
Gulf Coast	OK	Hughes	80.969	81.006	0.037	OK063	Kamie loamy fine sand, 3 to 8 percent slopes, severely eroded	0.037	0.000	0.000	0.000	0.001	0.037	0.000	0.000	0.037
Gulf Coast	OK	Hughes	81.006	81.124	0.118	OK063	Stidham loamy fine sand, 0 to 2 percent slopes	0.118	0.000	0.000	0.118	0.002	0.118	0.000	0.000	0.118
Gulf Coast	OK	Hughes	81.124	81.198	0.075	OK063	Okay loam, 0 to 1 percent slopes	0.000	0.000	0.000	0.075	0.001	0.075	0.000	0.000	0.000
Gulf Coast	OK	Hughes	81.198	81.323	0.124	OK063	Stidham loamy fine sand, 0 to 2 percent slopes	0.124	0.000	0.000	0.124	0.002	0.124	0.000	0.000	0.124
Gulf Coast	OK	Hughes	81.323	82.443	1.120	OK063	Wann loam, 0 to 1 percent slopes	0.000	1.120	0.000	0.000	0.022	1.120	1.120	0.728	0.000
Gulf Coast	OK	Hughes	82.443	82.634	0.191	OK063	Clearview-Hector complex, 3 to 5 percent slopes	0.000	0.000	0.000	0.191	0.004	0.191	0.048	0.191	0.000
Gulf Coast	OK	Hughes	82.634	83.054	0.420	OK063	Wann loam, 0 to 1 percent slopes	0.000	0.420	0.000	0.000	0.008	0.420	0.420	0.273	0.000
Gulf	OK	Hughes	83.054	83.212	0.157	OK063	Clearview-Hector complex, 3 to 5 percent slopes,	0.000	0.000	0.000	0.000	0.003	0.157	0.039	0.157	0.000

Appendix K – Soils by Milepost – Gulf Coast Section

Pipeline Segment		County	Beginning Milepost	Ending Milepost	Miles	Soil Series	Soil Series Name	Wind (miles)	water (miles)	Low revegetation potential (miles)	Prime Farmland (miles)	Hydric (miles)	Compaction Prone (miles)	Stony-Rocky (miles)	Shallow Bedrock (miles)	Droughty (miles)
Coast							eroded									
Gulf Coast	OK	Hughes	83.212	83.311	0.100	OK063	Clearview fine sandy loam, 1 to 3 percent slopes	0.000	0.000	0.000	0.100	0.002	0.100	0.000	0.100	0.000
Gulf Coast	OK	Hughes	83.311	83.522	0.211	OK063	Clearview-Hector complex, 3 to 5 percent slopes, eroded	0.000	0.000	0.000	0.000	0.004	0.211	0.053	0.211	0.000
Gulf Coast	OK	Hughes	83.522	83.599	0.077	OK063	Wann loam, 0 to 1 percent slopes	0.000	0.077	0.000	0.000	0.002	0.077	0.077	0.050	0.000
Gulf Coast	OK	Hughes	83.599	83.712	0.114	OK063	Bates fine sandy loam, 3 to 5 percent slopes, eroded	0.000	0.000	0.000	0.000	0.002	0.114	0.114	0.000	0.000
Gulf Coast	OK	Hughes	83.712	83.785	0.073	OK063	Dennis loam, 2 to 8 percent slopes, severely eroded	0.000	0.000	0.000	0.000	0.001	0.073	0.000	0.000	0.000
Gulf Coast	OK	Hughes	83.785	84.040	0.255	OK063	Dennis loam, 3 to 5 percent slopes	0.000	0.000	0.000	0.255	0.005	0.255	0.000	0.000	0.000
Gulf Coast	OK	Hughes	84.040	84.099	0.060	OK063	Bates fine sandy loam, 3 to 5 percent slopes	0.000	0.000	0.000	0.060	0.001	0.060	0.060	0.000	0.000
Gulf Coast	OK	Hughes	84.099	84.161	0.062	OK063	Dennis loam, 2 to 8 percent slopes, severely eroded	0.000	0.000	0.000	0.000	0.001	0.062	0.000	0.000	0.000
Gulf Coast	OK	Hughes	84.161	84.200	0.039	OK063	Bates-Coweta complex, 3 to 5 percent slopes	0.000	0.000	0.000	0.038	0.001	0.039	0.038	0.000	0.000
Gulf Coast	OK	Hughes	84.200	84.222	0.022	OK063	Eram-Verdigris complex, 0 to 20 percent slopes	0.000	0.012	0.000	0.000	0.000	0.022	0.000	0.000	0.000
Gulf Coast	OK	Hughes	84.222	84.411	0.189	OK063	Bates-Coweta complex, 3 to 5 percent slopes	0.000	0.000	0.000	0.183	0.004	0.189	0.183	0.000	0.000
Gulf Coast	OK	Hughes	84.411	84.531	0.120	OK063	Verdigris silt loam, 0 to 1 percent slopes, occasionally flooded	0.000	0.000	0.000	0.120	0.002	0.120	0.000	0.000	0.000
Gulf Coast	OK	Hughes	84.531	84.680	0.150	OK063	Hector-Endsaw complex, 30 to 45 percent slopes, extremely stony	0.000	0.097	0.000	0.000	0.003	0.150	0.097	0.067	0.000
Gulf Coast	OK	Hughes	84.680	84.761	0.081	OK063	Clearview fine sandy loam, 3 to 5 percent slopes, eroded	0.000	0.000	0.000	0.000	0.002	0.081	0.000	0.081	0.000
Gulf Coast	OK	Hughes	84.761	84.790	0.029	OK063	Hector-Endsaw complex, 30 to 45 percent slopes, extremely stony	0.000	0.019	0.000	0.000	0.001	0.029	0.019	0.013	0.000
Gulf Coast	OK	Hughes	84.790	84.898	0.108	OK063	Verdigris silt loam, 0 to 1 percent slopes, occasionally flooded	0.000	0.000	0.000	0.108	0.002	0.108	0.000	0.000	0.000
Gulf Coast	OK	Hughes	84.898	84.923	0.025	OK063	Wann loam, 0 to 1 percent slopes	0.000	0.025	0.000	0.000	0.001	0.025	0.025	0.016	0.000
Gulf Coast	OK	Hughes	84.923	84.963	0.039	OK063	Hector-Endsaw complex, 30 to 45 percent slopes, extremely stony	0.000	0.025	0.000	0.000	0.001	0.039	0.025	0.018	0.000
Gulf Coast	OK	Hughes	84.963	85.042	0.079	OK063	Clearview-Hector complex, 3 to 5 percent slopes	0.000	0.000	0.000	0.079	0.002	0.079	0.020	0.079	0.000
Gulf Coast	OK	Hughes	85.042	85.043	0.001	OK063	Hector-Endsaw complex, 30 to 45 percent slopes, extremely stony	0.000	0.001	0.000	0.000	0.000	0.001	0.001	0.001	0.000
Gulf Coast	OK	Hughes	85.043	85.332	0.289	OK063	Clearview-Hector complex, 3 to 5 percent slopes	0.000	0.000	0.000	0.289	0.006	0.289	0.072	0.289	0.000
Gulf	OK	Hughes	85.332	85.386	0.054	OK063	Hector-Endsaw complex, 30 to 45 percent slopes,	0.000	0.035	0.000	0.000	0.001	0.054	0.035	0.024	0.000

Appendix K – Soils by Milepost – Gulf Coast Section

Pipeline Segment		County	Beginning Milepost	Ending Milepost	Miles	Soil Series	Soil Series Name	Wind (miles)	water (miles)	Low revegetation potential (miles)	Prime Farmland (miles)	Hydric (miles)	Compaction Prone (miles)	Stony-Rocky (miles)	Shallow Bedrock (miles)	Droughty (miles)
Coast							extremely stony									
Gulf Coast	OK	Hughes	85.386	85.426	0.039	OK063	Wann loam, 0 to 1 percent slopes	0.000	0.039	0.000	0.000	0.001	0.039	0.039	0.026	0.000
Gulf Coast	OK	Hughes	85.426	85.465	0.040	OK063	Talihina-Coweta complex, 5 to 20 percent slopes, very stony	0.000	0.040	0.000	0.000	0.001	0.040	0.040	0.000	0.000
Gulf Coast	OK	Hughes	85.465	85.495	0.030	OK063	Dennis loam, 3 to 5 percent slopes, eroded	0.000	0.000	0.000	0.000	0.001	0.030	0.000	0.000	0.000
Gulf Coast	OK	Hughes	85.495	85.584	0.089	OK063	Bates-Coweta complex, 3 to 5 percent slopes	0.000	0.000	0.000	0.086	0.002	0.089	0.086	0.000	0.000
Gulf Coast	OK	Hughes	85.584	85.605	0.021	OK063	Wann loam, 0 to 1 percent slopes	0.000	0.021	0.000	0.000	0.000	0.021	0.021	0.013	0.000
Gulf Coast	OK	Hughes	85.605	85.665	0.061	OK063	Verdigris silt loam, 0 to 1 percent slopes, occasionally flooded	0.000	0.000	0.000	0.061	0.001	0.061	0.000	0.000	0.000
Gulf Coast	OK	Hughes	85.665	85.722	0.056	OK063	Bates-Coweta complex, 3 to 5 percent slopes	0.000	0.000	0.000	0.055	0.001	0.056	0.055	0.000	0.000
Gulf Coast	OK	Hughes	85.722	85.775	0.054	OK063	Talihina-Coweta complex, 5 to 20 percent slopes, very stony	0.000	0.054	0.000	0.000	0.001	0.054	0.054	0.000	0.000
Gulf Coast	OK	Hughes	85.775	85.991	0.215	OK063	Bates-Coweta complex, 3 to 5 percent slopes	0.000	0.000	0.000	0.209	0.004	0.215	0.209	0.000	0.000
Gulf Coast	OK	Hughes	85.991	86.146	0.156	OK063	Bates fine sandy loam, 3 to 5 percent slopes	0.000	0.000	0.000	0.156	0.003	0.156	0.156	0.000	0.000
Gulf Coast	OK	Hughes	86.146	86.347	0.201	OK063	Wann loam, 0 to 1 percent slopes	0.000	0.201	0.000	0.000	0.004	0.201	0.201	0.131	0.000
Gulf Coast	OK	Hughes	86.347	86.364	0.017	OK063	Verdigris silt loam, 0 to 1 percent slopes, occasionally flooded	0.000	0.000	0.000	0.017	0.000	0.017	0.000	0.000	0.000
Gulf Coast	OK	Hughes	86.364	86.600	0.236	OK063	Osage clay, 0 to 1 percent slopes, occasionally flooded	0.000	0.000	0.000	0.000	0.005	0.236	0.000	0.000	0.000
Gulf Coast	OK	Coal	86.600	86.969	0.369	OK029	Kaufman silty clay, 0 to 1 percent slopes, occasionally flooded	0.000	0.000	0.000	0.332	0.007	0.369	0.000	0.000	0.000
Gulf Coast	OK	Coal	86.969	87.010	0.041	OK029	Dela and Wynona soils, 0 to 1 percent slopes, frequently flooded	0.000	0.000	0.000	0.000	0.001	0.041	0.000	0.000	0.020
Gulf Coast	OK	Coal	87.010	87.200	0.190	OK029	Rexor loam, 0 to 1 percent slopes, occasionally flooded	0.000	0.000	0.000	0.181	0.004	0.190	0.000	0.000	0.000
Gulf Coast	OK	Coal	87.200	87.261	0.061	OK029	Wynona silt loam, 0 to 1 percent slopes, occasionally flooded	0.000	0.000	0.000	0.000	0.001	0.061	0.000	0.000	0.000
Gulf Coast	OK	Coal	87.261	87.401	0.140	OK029	Kaufman silty clay, 0 to 1 percent slopes, occasionally flooded	0.000	0.000	0.000	0.126	0.003	0.140	0.000	0.000	0.000
Gulf Coast	OK	Coal	87.401	87.421	0.020	OK029	Bosville loam, 3 to 5 percent slopes	0.000	0.000	0.000	0.019	0.000	0.020	0.000	0.000	0.000
Gulf Coast	OK	Coal	87.421	87.587	0.166	OK029	Steedman clay loam, 3 to 5 percent slopes	0.000	0.000	0.000	0.149	0.003	0.166	0.000	0.000	0.000
Gulf Coast	OK	Coal	87.587	87.627	0.040	OK029	Homa-Hector complex, 12 to 20 percent slopes	0.000	0.036	0.000	0.000	0.001	0.040	0.010	0.010	0.000
Gulf	OK	Coal	87.627	87.664	0.037	OK029	Dela and Wynona soils, 0 to 1 percent slopes,	0.000	0.000	0.000	0.000	0.001	0.037	0.000	0.000	0.019

Appendix K – Soils by Milepost – Gulf Coast Section

Pipeline Segment		County	Beginning Milepost	Ending Milepost	Miles	Soil Series	Soil Series Name	Wind (miles)	water (miles)	Low revegetation potential (miles)	Prime Farmland (miles)	Hydric (miles)	Compaction Prone (miles)	Stony-Rocky (miles)	Shallow Bedrock (miles)	Droughty (miles)
Coast							frequently flooded									
Gulf Coast	OK	Coal	87.664	87.838	0.174	OK029	Homa-Hector complex, 12 to 20 percent slopes	0.000	0.156	0.000	0.000	0.003	0.174	0.043	0.043	0.000
Gulf Coast	OK	Coal	87.838	88.117	0.279	OK029	Steedman-Coweta complex, 2 to 20 percent slopes	0.000	0.251	0.000	0.000	0.006	0.279	0.056	0.056	0.000
Gulf Coast	OK	Coal	88.117	89.238	1.121	OK029	Homa-Hector complex, 12 to 20 percent slopes	0.000	1.009	0.000	0.000	0.022	1.121	0.280	0.280	0.000
Gulf Coast	OK	Coal	89.238	89.257	0.019	OK029	Steedman-Coweta complex, 2 to 20 percent slopes	0.000	0.017	0.000	0.000	0.000	0.019	0.004	0.004	0.000
Gulf Coast	OK	Coal	89.257	89.551	0.294	OK029	Homa-Hector complex, 12 to 20 percent slopes	0.000	0.264	0.000	0.000	0.006	0.294	0.073	0.073	0.000
Gulf Coast	OK	Coal	89.551	89.652	0.101	OK029	Steedman-Coweta complex, 2 to 20 percent slopes	0.000	0.091	0.000	0.000	0.002	0.101	0.020	0.020	0.000
Gulf Coast	OK	Coal	89.652	89.747	0.095	OK029	Bates and Dennis soils, 3 to 5 percent slopes, severely eroded	0.000	0.000	0.000	0.000	0.002	0.095	0.043	0.000	0.000
Gulf Coast	OK	Coal	89.747	89.795	0.049	OK029	Dennis loam, 3 to 5 percent slopes, eroded	0.000	0.000	0.000	0.000	0.001	0.049	0.000	0.000	0.000
Gulf Coast	OK	Coal	89.795	89.856	0.061	OK029	Homa-Clearview complex, 3 to 5 percent slopes	0.000	0.000	0.000	0.058	0.001	0.061	0.000	0.015	0.000
Gulf Coast	OK	Coal	89.856	89.904	0.048	OK029	Homa-Hector complex, 12 to 20 percent slopes	0.000	0.043	0.000	0.000	0.001	0.048	0.012	0.012	0.000
Gulf Coast	OK	Coal	89.904	89.919	0.015	OK029	Steedman-Coweta complex, 2 to 20 percent slopes	0.000	0.013	0.000	0.000	0.000	0.015	0.003	0.003	0.000
Gulf Coast	OK	Coal	89.919	90.015	0.097	OK029	Homa-Hector complex, 12 to 20 percent slopes	0.000	0.087	0.000	0.000	0.002	0.097	0.024	0.024	0.000
Gulf Coast	OK	Coal	90.015	90.034	0.018	OK029	Homa-Clearview complex, 3 to 5 percent slopes	0.000	0.000	0.000	0.017	0.000	0.018	0.000	0.005	0.000
Gulf Coast	OK	Coal	90.034	90.181	0.148	OK029	Homa-Hector complex, 12 to 20 percent slopes	0.000	0.133	0.000	0.000	0.003	0.148	0.037	0.037	0.000
Gulf Coast	OK	Coal	90.181	90.390	0.209	OK029	Clearview fine sandy loam, 3 to 5 percent slopes	0.000	0.000	0.000	0.198	0.004	0.209	0.000	0.198	0.000
Gulf Coast	OK	Coal	90.390	90.473	0.082	OK029	Clearview fine sandy loam, 1 to 3 percent slopes	0.000	0.000	0.000	0.078	0.002	0.082	0.000	0.078	0.000
Gulf Coast	OK	Coal	90.473	90.489	0.017	OK029	Homa-Clearview complex, 3 to 5 percent slopes	0.000	0.000	0.000	0.016	0.000	0.017	0.000	0.004	0.000
Gulf Coast	OK	Coal	90.489	90.689	0.200	OK029	Clearview fine sandy loam, 3 to 5 percent slopes	0.000	0.000	0.000	0.190	0.004	0.200	0.000	0.190	0.000
Gulf Coast	OK	Coal	90.689	90.731	0.043	OK029	Clearview fine sandy loam, 3 to 5 percent slopes, eroded	0.000	0.000	0.000	0.000	0.001	0.043	0.000	0.036	0.000
Gulf Coast	OK	Coal	90.731	90.861	0.129	OK029	Clearview fine sandy loam, 1 to 3 percent slopes	0.000	0.000	0.000	0.123	0.003	0.129	0.000	0.123	0.000
Gulf Coast	OK	Coal	90.861	91.118	0.257	OK029	Wynona silt loam, 0 to 1 percent slopes, occasionally flooded	0.000	0.000	0.000	0.000	0.005	0.257	0.000	0.000	0.000
Gulf	OK	Coal	91.118	91.135	0.018	OK029	Dennis loam, 3 to 5 percent slopes, eroded	0.000	0.000	0.000	0.000	0.000	0.018	0.000	0.000	0.000

Appendix K – Soils by Milepost – Gulf Coast Section

Pipeline Segment		County	Beginning Milepost	Ending Milepost	Miles	Soil Series	Soil Series Name	Wind (miles)	water (miles)	Low revegetation potential (miles)	Prime Farmland (miles)	Hydric (miles)	Compaction Prone (miles)	Stony-Rocky (miles)	Shallow Bedrock (miles)	Droughty (miles)
Coast																
Gulf Coast	OK	Coal	91.135	91.268	0.132	OK029	Clearview fine sandy loam, 3 to 5 percent slopes, eroded	0.000	0.000	0.000	0.000	0.003	0.132	0.000	0.113	0.000
Gulf Coast	OK	Coal	91.268	91.451	0.183	OK029	Homa-Hector complex, 12 to 20 percent slopes	0.000	0.165	0.000	0.000	0.004	0.183	0.046	0.046	0.000
Gulf Coast	OK	Coal	91.451	91.570	0.119	OK029	Homa-Clearview complex, 3 to 5 percent slopes	0.000	0.000	0.000	0.113	0.002	0.119	0.000	0.030	0.000
Gulf Coast	OK	Coal	91.570	91.658	0.088	OK029	Homa-Hector complex, 12 to 20 percent slopes	0.000	0.079	0.000	0.000	0.002	0.088	0.022	0.022	0.000
Gulf Coast	OK	Coal	91.658	91.718	0.060	OK029	Homa-Clearview complex, 3 to 5 percent slopes	0.000	0.000	0.000	0.057	0.001	0.060	0.000	0.015	0.000
Gulf Coast	OK	Coal	91.718	91.795	0.077	OK029	Homa-Hector complex, 12 to 20 percent slopes	0.000	0.069	0.000	0.000	0.002	0.077	0.019	0.019	0.000
Gulf Coast	OK	Coal	91.795	91.913	0.118	OK029	Clearview fine sandy loam, 3 to 5 percent slopes, eroded	0.000	0.000	0.000	0.000	0.002	0.118	0.000	0.100	0.000
Gulf Coast	OK	Coal	91.913	91.966	0.053	OK029	Bates and Dennis soils, 3 to 5 percent slopes, severely eroded	0.000	0.000	0.000	0.000	0.001	0.053	0.024	0.000	0.000
Gulf Coast	OK	Coal	91.966	91.989	0.023	OK029	Dennis loam, 3 to 5 percent slopes, eroded	0.000	0.000	0.000	0.000	0.000	0.023	0.000	0.000	0.000
Gulf Coast	OK	Coal	91.989	91.995	0.006	OK029	Dennis loam, 1 to 3 percent slopes	0.000	0.000	0.000	0.005	0.000	0.006	0.000	0.000	0.000
Gulf Coast	OK	Coal	91.995	92.053	0.058	OK029	Dela and Wynona soils, 0 to 1 percent slopes, frequently flooded	0.000	0.000	0.000	0.000	0.001	0.058	0.000	0.000	0.029
Gulf Coast	OK	Coal	92.053	92.103	0.051	OK029	Dennis loam, 1 to 3 percent slopes	0.000	0.000	0.000	0.046	0.001	0.051	0.000	0.000	0.000
Gulf Coast	OK	Coal	92.103	92.213	0.109	OK029	Clearview fine sandy loam, 3 to 5 percent slopes, severely eroded	0.000	0.000	0.000	0.000	0.002	0.109	0.000	0.104	0.000
Gulf Coast	OK	Coal	92.213	92.249	0.036	OK029	Homa-Hector complex, 12 to 20 percent slopes	0.000	0.032	0.000	0.000	0.001	0.036	0.009	0.009	0.000
Gulf Coast	OK	Coal	92.249	92.300	0.051	OK029	Steedman-Coweta complex, 2 to 20 percent slopes	0.000	0.046	0.000	0.000	0.001	0.051	0.010	0.010	0.000
Gulf Coast	OK	Coal	92.300	92.346	0.045	OK029	Dennis loam, 3 to 5 percent slopes	0.000	0.000	0.000	0.043	0.001	0.045	0.000	0.000	0.000
Gulf Coast	OK	Coal	92.346	92.379	0.033	OK029	Dela and Wynona soils, 0 to 1 percent slopes, frequently flooded	0.000	0.000	0.000	0.000	0.001	0.033	0.000	0.000	0.017
Gulf Coast	OK	Coal	92.379	92.415	0.037	OK029	Steedman-Coweta complex, 2 to 20 percent slopes	0.000	0.033	0.000	0.000	0.001	0.037	0.007	0.007	0.000
Gulf Coast	OK	Coal	92.415	92.492	0.077	OK029	Bates and Dennis soils, 3 to 5 percent slopes, severely eroded	0.000	0.000	0.000	0.000	0.002	0.077	0.035	0.000	0.000
Gulf Coast	OK	Coal	92.492	92.549	0.057	OK029	Dennis loam, 3 to 5 percent slopes, eroded	0.000	0.000	0.000	0.000	0.001	0.057	0.000	0.000	0.000
Gulf Coast	OK	Coal	92.549	92.576	0.027	OK029	Dela and Wynona soils, 0 to 1 percent slopes, frequently flooded	0.000	0.000	0.000	0.000	0.001	0.027	0.000	0.000	0.014
Gulf	OK	Coal	92.576	92.607	0.031	OK029	Bates fine sandy loam, 3 to 5 percent slopes	0.000	0.000	0.000	0.029	0.001	0.031	0.029	0.000	0.000

Appendix K – Soils by Milepost – Gulf Coast Section

Pipeline Segment		County	Beginning Milepost	Ending Milepost	Miles	Soil Series	Soil Series Name	Wind (miles)	water (miles)	Low revegetation potential (miles)	Prime Farmland (miles)	Hydric (miles)	Compaction Prone (miles)	Stony-Rocky (miles)	Shallow Bedrock (miles)	Droughty (miles)
Coast																
Gulf Coast	OK	Coal	92.607	92.674	0.067	OK029	Dela and Wynona soils, 0 to 1 percent slopes, frequently flooded	0.000	0.000	0.000	0.000	0.001	0.067	0.000	0.000	0.033
Gulf Coast	OK	Coal	92.674	92.768	0.095	OK029	Bates and Dennis soils, 3 to 5 percent slopes, severely eroded	0.000	0.000	0.000	0.000	0.002	0.095	0.043	0.000	0.000
Gulf Coast	OK	Coal	92.768	92.884	0.116	OK029	Bates fine sandy loam, 3 to 5 percent slopes, eroded	0.000	0.000	0.000	0.000	0.002	0.116	0.110	0.000	0.000
Gulf Coast	OK	Coal	92.884	92.983	0.099	OK029	Steedman clay loam, 3 to 5 percent slopes	0.000	0.000	0.000	0.089	0.002	0.099	0.000	0.000	0.000
Gulf Coast	OK	Coal	92.983	93.030	0.047	OK029	Dennis loam, 3 to 5 percent slopes, eroded	0.000	0.000	0.000	0.000	0.001	0.047	0.000	0.000	0.000
Gulf Coast	OK	Coal	93.030	93.130	0.100	OK029	Bates-Coweta complex, 1 to 5 percent slopes	0.000	0.000	0.000	0.000	0.002	0.100	0.090	0.000	0.000
Gulf Coast	OK	Coal	93.130	93.149	0.018	OK029	Steedman-Coweta complex, 2 to 20 percent slopes	0.000	0.016	0.000	0.000	0.000	0.018	0.004	0.004	0.000
Gulf Coast	OK	Coal	93.149	93.189	0.041	OK029	Steedman clay loam, 3 to 5 percent slopes	0.000	0.000	0.000	0.037	0.001	0.041	0.000	0.000	0.000
Gulf Coast	OK	Coal	93.189	93.344	0.155	OK029	Dennis loam, 3 to 5 percent slopes	0.000	0.000	0.000	0.147	0.003	0.155	0.000	0.000	0.000
Gulf Coast	OK	Coal	93.344	93.470	0.126	OK029	Dennis loam, 3 to 5 percent slopes, eroded	0.000	0.000	0.000	0.000	0.003	0.126	0.000	0.000	0.000
Gulf Coast	OK	Coal	93.470	93.589	0.119	OK029	Bates and Dennis soils, 3 to 5 percent slopes, severely eroded	0.000	0.000	0.000	0.000	0.002	0.119	0.054	0.000	0.000
Gulf Coast	OK	Coal	93.589	93.649	0.060	OK029	Dennis loam, 3 to 5 percent slopes, eroded	0.000	0.000	0.000	0.000	0.001	0.060	0.000	0.000	0.000
Gulf Coast	OK	Coal	93.649	93.708	0.059	OK029	Bates-Coweta complex, 1 to 5 percent slopes	0.000	0.000	0.000	0.000	0.001	0.059	0.053	0.000	0.000
Gulf Coast	OK	Coal	93.708	93.766	0.058	OK029	Steedman-Coweta complex, 2 to 20 percent slopes	0.000	0.052	0.000	0.000	0.001	0.058	0.012	0.012	0.000
Gulf Coast	OK	Coal	93.766	93.928	0.162	OK029	Homa-Hector complex, 12 to 20 percent slopes	0.000	0.146	0.000	0.000	0.003	0.162	0.040	0.040	0.000
Gulf Coast	OK	Coal	93.928	94.039	0.110	OK029	Clearview fine sandy loam, 3 to 5 percent slopes	0.000	0.000	0.000	0.105	0.002	0.110	0.000	0.105	0.000
Gulf Coast	OK	Coal	94.039	94.110	0.071	OK029	Clearview fine sandy loam, 3 to 5 percent slopes, severely eroded	0.000	0.000	0.000	0.000	0.001	0.071	0.000	0.067	0.000
Gulf Coast	OK	Coal	94.110	94.206	0.097	OK029	Dela and Wynona soils, 0 to 1 percent slopes, frequently flooded	0.000	0.000	0.000	0.000	0.002	0.097	0.000	0.000	0.048
Gulf Coast	OK	Coal	94.206	94.291	0.085	OK029	Bates and Dennis soils, 3 to 5 percent slopes, severely eroded	0.000	0.000	0.000	0.000	0.002	0.085	0.038	0.000	0.000
Gulf Coast	OK	Coal	94.291	94.338	0.047	OK029	Bosville loam, 3 to 5 percent slopes	0.000	0.000	0.000	0.044	0.001	0.047	0.000	0.000	0.000
Gulf Coast	OK	Coal	94.338	94.403	0.065	OK029	Dela and Wynona soils, 0 to 1 percent slopes, frequently flooded	0.000	0.000	0.000	0.000	0.001	0.065	0.000	0.000	0.033
Gulf	OK	Coal	94.403	94.506	0.104	OK029	Steedman-Coweta complex, 2 to 20 percent slopes	0.000	0.093	0.000	0.000	0.002	0.104	0.021	0.021	0.000

Appendix K – Soils by Milepost – Gulf Coast Section

Pipeline Segment		County	Beginning Milepost	Ending Milepost	Miles	Soil Series	Soil Series Name	Wind (miles)	water (miles)	Low revegetation potential (miles)	Prime Farmland (miles)	Hydric (miles)	Compaction Prone (miles)	Stony-Rocky (miles)	Shallow Bedrock (miles)	Droughty (miles)
Coast																
Gulf Coast	OK	Coal	94.506	94.605	0.098	OK029	Homa-Clearview complex, 3 to 5 percent slopes	0.000	0.000	0.000	0.093	0.002	0.098	0.000	0.025	0.000
Gulf Coast	OK	Coal	94.605	94.679	0.074	OK029	Steedman-Coweta complex, 2 to 20 percent slopes	0.000	0.067	0.000	0.000	0.001	0.074	0.015	0.015	0.000
Gulf Coast	OK	Coal	94.679	94.729	0.051	OK029	Homa-Hector complex, 12 to 20 percent slopes	0.000	0.046	0.000	0.000	0.001	0.051	0.013	0.013	0.000
Gulf Coast	OK	Coal	94.729	94.890	0.161	OK029	Wynona silt loam, 0 to 1 percent slopes, occasionally flooded	0.000	0.000	0.000	0.000	0.003	0.161	0.000	0.000	0.000
Gulf Coast	OK	Coal	94.890	94.947	0.057	OK029	Homa-Clearview complex, 3 to 5 percent slopes	0.000	0.000	0.000	0.054	0.001	0.057	0.000	0.014	0.000
Gulf Coast	OK	Coal	94.947	95.045	0.098	OK029	Steedman-Coweta complex, 2 to 20 percent slopes	0.000	0.088	0.000	0.000	0.002	0.098	0.020	0.020	0.000
Gulf Coast	OK	Coal	95.045	95.202	0.157	OK029	Bates-Coweta complex, 1 to 5 percent slopes	0.000	0.000	0.000	0.000	0.003	0.157	0.141	0.000	0.000
Gulf Coast	OK	Coal	95.202	95.284	0.081	OK029	Bates and Dennis soils, 3 to 5 percent slopes, severely eroded	0.000	0.000	0.000	0.000	0.002	0.081	0.037	0.000	0.000
Gulf Coast	OK	Coal	95.284	95.334	0.051	OK029	Bates-Coweta complex, 1 to 5 percent slopes	0.000	0.000	0.000	0.000	0.001	0.051	0.046	0.000	0.000
Gulf Coast	OK	Coal	95.334	95.457	0.123	OK029	Steedman-Coweta complex, 2 to 20 percent slopes	0.000	0.110	0.000	0.000	0.002	0.123	0.025	0.025	0.000
Gulf Coast	OK	Coal	95.457	95.494	0.037	OK029	Dela and Wynona soils, 0 to 1 percent slopes, frequently flooded	0.000	0.000	0.000	0.000	0.001	0.037	0.000	0.000	0.019
Gulf Coast	OK	Coal	95.494	95.564	0.070	OK029	Dennis loam, 1 to 3 percent slopes	0.000	0.000	0.000	0.063	0.001	0.070	0.000	0.000	0.000
Gulf Coast	OK	Coal	95.564	95.768	0.204	OK029	Steedman-Coweta complex, 2 to 20 percent slopes	0.000	0.184	0.000	0.000	0.004	0.204	0.041	0.041	0.000
Gulf Coast	OK	Coal	95.768	95.914	0.146	OK029	Clearview fine sandy loam, 3 to 5 percent slopes	0.000	0.000	0.000	0.138	0.003	0.146	0.000	0.138	0.000
Gulf Coast	OK	Coal	95.914	95.996	0.082	OK029	Homa-Hector complex, 12 to 20 percent slopes	0.000	0.074	0.000	0.000	0.002	0.082	0.021	0.021	0.000
Gulf Coast	OK	Coal	95.996	96.093	0.097	OK029	Steedman-Coweta complex, 2 to 20 percent slopes	0.000	0.087	0.000	0.000	0.002	0.097	0.019	0.019	0.000
Gulf Coast	OK	Coal	96.093	96.169	0.076	OK029	Homa-Clearview complex, 3 to 5 percent slopes	0.000	0.000	0.000	0.072	0.002	0.076	0.000	0.019	0.000
Gulf Coast	OK	Coal	96.169	96.233	0.064	OK029	Bates-Coweta complex, 1 to 5 percent slopes	0.000	0.000	0.000	0.000	0.001	0.064	0.057	0.000	0.000
Gulf Coast	OK	Coal	96.233	96.465	0.233	OK029	Steedman-Coweta complex, 2 to 20 percent slopes	0.000	0.210	0.000	0.000	0.005	0.233	0.047	0.047	0.000
Gulf Coast	OK	Coal	96.465	96.513	0.047	OK029	Steedman clay loam, 3 to 5 percent slopes	0.000	0.000	0.000	0.042	0.001	0.047	0.000	0.000	0.000
Gulf Coast	OK	Coal	96.513	96.594	0.081	OK029	Dennis loam, 3 to 5 percent slopes	0.000	0.000	0.000	0.077	0.002	0.081	0.000	0.000	0.000
Gulf	OK	Coal	96.594	96.635	0.042	OK029	Steedman clay loam, 3 to 5 percent slopes	0.000	0.000	0.000	0.038	0.001	0.042	0.000	0.000	0.000

Appendix K – Soils by Milepost – Gulf Coast Section

Pipeline Segment		County	Beginning Milepost	Ending Milepost	Miles	Soil Series	Soil Series Name	Wind (miles)	water (miles)	Low revegetation potential (miles)	Prime Farmland (miles)	Hydric (miles)	Compaction Prone (miles)	Stony-Rocky (miles)	Shallow Bedrock (miles)	Droughty (miles)
Coast																
Gulf Coast	OK	Coal	96.635	96.728	0.093	OK029	Steedman-Coweta complex, 2 to 20 percent slopes	0.000	0.083	0.000	0.000	0.002	0.093	0.019	0.019	0.000
Gulf Coast	OK	Coal	96.728	96.805	0.077	OK029	Dennis loam, 3 to 5 percent slopes, eroded	0.000	0.000	0.000	0.000	0.002	0.077	0.000	0.000	0.000
Gulf Coast	OK	Coal	96.805	97.022	0.216	OK029	Pharoah silt loam, 0 to 1 percent slopes	0.000	0.000	0.206	0.000	0.004	0.216	0.000	0.000	0.000
Gulf Coast	OK	Coal	97.022	97.095	0.073	OK029	Dela and Wynona soils, 0 to 1 percent slopes, frequently flooded	0.000	0.000	0.000	0.000	0.001	0.073	0.000	0.000	0.037
Gulf Coast	OK	Coal	97.095	97.192	0.097	OK029	Dennis loam, 3 to 5 percent slopes, eroded	0.000	0.000	0.000	0.000	0.002	0.097	0.000	0.000	0.000
Gulf Coast	OK	Coal	97.192	97.292	0.100	OK029	Bates-Coweta complex, 1 to 5 percent slopes	0.000	0.000	0.000	0.000	0.002	0.100	0.090	0.000	0.000
Gulf Coast	OK	Coal	97.292	97.357	0.066	OK029	Clearview fine sandy loam, 3 to 5 percent slopes, eroded	0.000	0.000	0.000	0.000	0.001	0.066	0.000	0.056	0.000
Gulf Coast	OK	Coal	97.357	97.418	0.061	OK029	Bates and Dennis soils, 3 to 5 percent slopes, severely eroded	0.000	0.000	0.000	0.000	0.001	0.061	0.027	0.000	0.000
Gulf Coast	OK	Coal	97.418	97.457	0.038	OK029	Dela and Wynona soils, 0 to 1 percent slopes, frequently flooded	0.000	0.000	0.000	0.000	0.001	0.038	0.000	0.000	0.019
Gulf Coast	OK	Coal	97.457	97.535	0.079	OK029	Homa-Hector complex, 12 to 20 percent slopes	0.000	0.071	0.000	0.000	0.002	0.079	0.020	0.020	0.000
Gulf Coast	OK	Coal	97.535	97.592	0.057	OK029	Homa-Clearview complex, 3 to 5 percent slopes	0.000	0.000	0.000	0.054	0.001	0.057	0.000	0.014	0.000
Gulf Coast	OK	Coal	97.592	97.614	0.022	OK029	Parsons silt loam, 1 to 3 percent slopes	0.000	0.000	0.000	0.021	0.000	0.022	0.000	0.000	0.000
Gulf Coast	OK	Coal	97.614	97.794	0.180	OK029	Steedman clay loam, 3 to 5 percent slopes	0.000	0.000	0.000	0.162	0.004	0.180	0.000	0.000	0.000
Gulf Coast	OK	Coal	97.794	97.835	0.040	OK029	Steedman-Coweta complex, 2 to 20 percent slopes	0.000	0.036	0.000	0.000	0.001	0.040	0.008	0.008	0.000
Gulf Coast	OK	Coal	97.835	97.885	0.050	OK029	Steedman clay loam, 3 to 5 percent slopes	0.000	0.000	0.000	0.045	0.001	0.050	0.000	0.000	0.000
Gulf Coast	OK	Coal	97.885	97.972	0.088	OK029	Dennis loam, 3 to 5 percent slopes	0.000	0.000	0.000	0.083	0.002	0.088	0.000	0.000	0.000
Gulf Coast	OK	Coal	97.972	98.025	0.052	OK029	Parsons silt loam, 1 to 3 percent slopes	0.000	0.000	0.000	0.049	0.001	0.052	0.000	0.000	0.000
Gulf Coast	OK	Coal	98.025	98.167	0.142	OK029	Bates and Dennis soils, 3 to 5 percent slopes, severely eroded	0.000	0.000	0.000	0.000	0.003	0.142	0.064	0.000	0.000
Gulf Coast	OK	Coal	98.167	98.407	0.240	OK029	Dennis loam, 3 to 5 percent slopes, eroded	0.000	0.000	0.000	0.000	0.005	0.240	0.000	0.000	0.000
Gulf Coast	OK	Coal	98.407	98.425	0.018	OK029	Bates and Dennis soils, 3 to 5 percent slopes, severely eroded	0.000	0.000	0.000	0.000	0.000	0.018	0.008	0.000	0.000
Gulf Coast	OK	Coal	98.425	98.506	0.081	OK029	Steedman-Coweta complex, 2 to 20 percent slopes	0.000	0.073	0.000	0.000	0.002	0.081	0.016	0.016	0.000
Gulf	OK	Coal	98.506	98.533	0.027	OK029	Homa-Hector complex, 12 to 20 percent slopes	0.000	0.024	0.000	0.000	0.001	0.027	0.007	0.007	0.000

Appendix K – Soils by Milepost – Gulf Coast Section

Pipeline Segment		County	Beginning Milepost	Ending Milepost	Miles	Soil Series	Soil Series Name	Wind (miles)	water (miles)	Low revegetation potential (miles)	Prime Farmland (miles)	Hydric (miles)	Compaction Prone (miles)	Stony-Rocky (miles)	Shallow Bedrock (miles)	Droughty (miles)
Coast																
Gulf Coast	OK	Coal	98.533	98.550	0.017	OK029	Bates-Coweta complex, 1 to 5 percent slopes	0.000	0.000	0.000	0.000	0.000	0.017	0.015	0.000	0.000
Gulf Coast	OK	Coal	98.550	98.684	0.133	OK029	Homa-Hector complex, 12 to 20 percent slopes	0.000	0.120	0.000	0.000	0.003	0.133	0.033	0.033	0.000
Gulf Coast	OK	Coal	98.684	98.769	0.086	OK029	Bates-Coweta complex, 1 to 5 percent slopes	0.000	0.000	0.000	0.000	0.002	0.086	0.077	0.000	0.000
Gulf Coast	OK	Coal	98.769	98.852	0.083	OK029	Bates fine sandy loam, 3 to 5 percent slopes, eroded	0.000	0.000	0.000	0.000	0.002	0.083	0.079	0.000	0.000
Gulf Coast	OK	Coal	98.852	99.049	0.197	OK029	Dennis loam, 3 to 5 percent slopes, eroded	0.000	0.000	0.000	0.000	0.004	0.197	0.000	0.000	0.000
Gulf Coast	OK	Coal	99.049	99.112	0.063	OK029	Homa-Hector complex, 12 to 20 percent slopes	0.000	0.057	0.000	0.000	0.001	0.063	0.016	0.016	0.000
Gulf Coast	OK	Coal	99.112	99.164	0.052	OK029	Homa-Clearview complex, 3 to 5 percent slopes	0.000	0.000	0.000	0.049	0.001	0.052	0.000	0.013	0.000
Gulf Coast	OK	Coal	99.164	99.240	0.075	OK029	Wynona silt loam, 0 to 1 percent slopes, occasionally flooded	0.000	0.000	0.000	0.000	0.002	0.075	0.000	0.000	0.000
Gulf Coast	OK	Coal	99.240	99.318	0.079	OK029	Lightning-Healdton complex, 0 to 1 percent slopes, occasionally flooded	0.000	0.000	0.020	0.075	0.002	0.079	0.000	0.000	0.000
Gulf Coast	OK	Coal	99.318	99.493	0.174	OK029	Dennis loam, 3 to 5 percent slopes, eroded	0.000	0.000	0.000	0.000	0.003	0.174	0.000	0.000	0.000
Gulf Coast	OK	Coal	99.493	99.534	0.041	OK029	Steedman-Dela complex, 5 to 30 percent slopes	0.000	0.015	0.000	0.000	0.001	0.041	0.000	0.000	0.014
Gulf Coast	OK	Coal	99.534	99.681	0.148	OK029	Parsons silt loam, 1 to 3 percent slopes	0.000	0.000	0.000	0.140	0.003	0.148	0.000	0.000	0.000
Gulf Coast	OK	Coal	99.681	99.709	0.028	OK029	Bates and Dennis soils, 3 to 5 percent slopes, severely eroded	0.000	0.000	0.000	0.000	0.001	0.028	0.013	0.000	0.000
Gulf Coast	OK	Coal	99.709	99.755	0.046	OK029	Parsons silt loam, 1 to 3 percent slopes	0.000	0.000	0.000	0.043	0.001	0.046	0.000	0.000	0.000
Gulf Coast	OK	Coal	99.755	99.801	0.047	OK029	Bates and Dennis soils, 3 to 5 percent slopes, severely eroded	0.000	0.000	0.000	0.000	0.001	0.047	0.021	0.000	0.000
Gulf Coast	OK	Coal	99.801	99.811	0.010	OK029	Clearview fine sandy loam, 3 to 5 percent slopes	0.000	0.000	0.000	0.010	0.000	0.010	0.000	0.010	0.000
Gulf Coast	OK	Coal	99.811	99.880	0.069	OK029	Bates and Dennis soils, 3 to 5 percent slopes, severely eroded	0.000	0.000	0.000	0.000	0.001	0.069	0.031	0.000	0.000
Gulf Coast	OK	Coal	99.880	100.117	0.237	OK029	Homa-Hector complex, 12 to 20 percent slopes	0.000	0.213	0.000	0.000	0.005	0.237	0.059	0.059	0.000
Gulf Coast	OK	Coal	100.117	100.194	0.077	OK029	Clearview fine sandy loam, 3 to 5 percent slopes	0.000	0.000	0.000	0.073	0.002	0.077	0.000	0.073	0.000
Gulf Coast	OK	Coal	100.194	100.393	0.198	OK029	Homa-Hector complex, 12 to 20 percent slopes	0.000	0.178	0.000	0.000	0.004	0.198	0.050	0.050	0.000
Gulf Coast	OK	Coal	100.393	100.433	0.040	OK029	Dela and Wynona soils, 0 to 1 percent slopes, frequently flooded	0.000	0.000	0.000	0.000	0.001	0.040	0.000	0.000	0.020
Gulf	OK	Coal	100.433	100.516	0.083	OK029	Homa-Hector complex, 12 to 20 percent slopes	0.000	0.075	0.000	0.000	0.002	0.083	0.021	0.021	0.000

Appendix K – Soils by Milepost – Gulf Coast Section

Pipeline Segment		County	Beginning Milepost	Ending Milepost	Miles	Soil Series	Soil Series Name	Wind (miles)	water (miles)	Low revegetation potential (miles)	Prime Farmland (miles)	Hydric (miles)	Compaction Prone (miles)	Stony-Rocky (miles)	Shallow Bedrock (miles)	Droughty (miles)
Coast																
Gulf Coast	OK	Coal	100.516	100.767	0.251	OK029	Homa-Clearview complex, 3 to 5 percent slopes	0.000	0.000	0.000	0.238	0.005	0.251	0.000	0.063	0.000
Gulf Coast	OK	Coal	100.767	101.246	0.479	OK029	Homa-Hector complex, 12 to 20 percent slopes	0.000	0.431	0.000	0.000	0.010	0.479	0.120	0.120	0.000
Gulf Coast	OK	Coal	101.246	101.331	0.085	OK029	Steedman-Coweta complex, 2 to 20 percent slopes	0.000	0.076	0.000	0.000	0.002	0.085	0.017	0.017	0.000
Gulf Coast	OK	Coal	101.331	101.373	0.042	OK029	Homa-Hector complex, 12 to 20 percent slopes	0.000	0.038	0.000	0.000	0.001	0.042	0.011	0.011	0.000
Gulf Coast	OK	Coal	101.373	101.481	0.108	OK029	Clearview fine sandy loam, 3 to 5 percent slopes	0.000	0.000	0.000	0.103	0.002	0.108	0.000	0.103	0.000
Gulf Coast	OK	Coal	101.481	101.655	0.173	OK029	Dennis loam, 1 to 3 percent slopes	0.000	0.000	0.000	0.156	0.003	0.173	0.000	0.000	0.000
Gulf Coast	OK	Coal	101.655	101.708	0.053	OK029	Dela and Wynona soils, 0 to 1 percent slopes, frequently flooded	0.000	0.000	0.000	0.000	0.001	0.053	0.000	0.000	0.027
Gulf Coast	OK	Coal	101.708	101.805	0.097	OK029	Bates fine sandy loam, 3 to 5 percent slopes	0.000	0.000	0.000	0.093	0.002	0.097	0.093	0.000	0.000
Gulf Coast	OK	Coal	101.805	101.826	0.021	OK029	Homa-Clearview complex, 3 to 5 percent slopes	0.000	0.000	0.000	0.020	0.000	0.021	0.000	0.005	0.000
Gulf Coast	OK	Coal	101.826	101.881	0.054	OK029	Bates fine sandy loam, 3 to 5 percent slopes, eroded	0.000	0.000	0.000	0.000	0.001	0.054	0.052	0.000	0.000
Gulf Coast	OK	Coal	101.881	101.924	0.043	OK029	Homa-Hector complex, 12 to 20 percent slopes	0.000	0.039	0.000	0.000	0.001	0.043	0.011	0.011	0.000
Gulf Coast	OK	Coal	101.924	101.959	0.035	OK029	Dela and Wynona soils, 0 to 1 percent slopes, frequently flooded	0.000	0.000	0.000	0.000	0.001	0.035	0.000	0.000	0.018
Gulf Coast	OK	Coal	101.959	102.360	0.401	OK029	Homa-Hector complex, 12 to 20 percent slopes	0.000	0.361	0.000	0.000	0.008	0.401	0.100	0.100	0.000
Gulf Coast	OK	Coal	102.360	102.480	0.120	OK029	Dela and Wynona soils, 0 to 1 percent slopes, frequently flooded	0.000	0.000	0.000	0.000	0.002	0.120	0.000	0.000	0.060
Gulf Coast	OK	Coal	102.480	102.704	0.224	OK029	Homa-Hector complex, 12 to 20 percent slopes	0.000	0.201	0.000	0.000	0.004	0.224	0.056	0.056	0.000
Gulf Coast	OK	Coal	102.704	102.718	0.015	OK029	Steedman-Coweta complex, 2 to 20 percent slopes	0.000	0.013	0.000	0.000	0.000	0.015	0.003	0.003	0.000
Gulf Coast	OK	Coal	102.718	102.839	0.121	OK029	Bates and Dennis soils, 3 to 5 percent slopes, severely eroded	0.000	0.000	0.000	0.000	0.002	0.121	0.054	0.000	0.000
Gulf Coast	OK	Coal	102.839	102.928	0.089	OK029	Wynona silt loam, 0 to 1 percent slopes, occasionally flooded	0.000	0.000	0.000	0.000	0.002	0.089	0.000	0.000	0.000
Gulf Coast	OK	Coal	102.928	102.970	0.042	OK029	Dennis loam, 3 to 5 percent slopes, eroded	0.000	0.000	0.000	0.000	0.001	0.042	0.000	0.000	0.000
Gulf Coast	OK	Coal	102.970	102.987	0.017	OK029	Bates and Dennis soils, 3 to 5 percent slopes, severely eroded	0.000	0.000	0.000	0.000	0.000	0.017	0.008	0.000	0.000
Gulf Coast	OK	Coal	102.987	103.112	0.125	OK029	Dennis loam, 3 to 5 percent slopes, eroded	0.000	0.000	0.000	0.000	0.002	0.125	0.000	0.000	0.000
Gulf	OK	Coal	103.112	103.143	0.032	OK029	Bates and Dennis soils, 3 to 5 percent slopes,	0.000	0.000	0.000	0.000	0.001	0.032	0.014	0.000	0.000

Appendix K – Soils by Milepost – Gulf Coast Section

Pipeline Segment		County	Beginning Milepost	Ending Milepost	Miles	Soil Series	Soil Series Name	Wind (miles)	water (miles)	Low revegetation potential (miles)	Prime Farmland (miles)	Hydric (miles)	Compaction Prone (miles)	Stony-Rocky (miles)	Shallow Bedrock (miles)	Droughty (miles)
Coast							severely eroded									
Gulf Coast	OK	Coal	103.143	103.243	0.099	OK029	Dennis loam, 3 to 5 percent slopes, eroded	0.000	0.000	0.000	0.000	0.002	0.099	0.000	0.000	0.000
Gulf Coast	OK	Coal	103.243	103.396	0.153	OK029	Bates and Dennis soils, 3 to 5 percent slopes, severely eroded	0.000	0.000	0.000	0.000	0.003	0.153	0.069	0.000	0.000
Gulf Coast	OK	Coal	103.396	103.437	0.041	OK029	Dela and Wynona soils, 0 to 1 percent slopes, frequently flooded	0.000	0.000	0.000	0.000	0.001	0.041	0.000	0.000	0.020
Gulf Coast	OK	Coal	103.437	103.572	0.135	OK029	Steedman clay loam, 3 to 5 percent slopes	0.000	0.000	0.000	0.122	0.003	0.135	0.000	0.000	0.000
Gulf Coast	OK	Coal	103.572	103.972	0.400	OK029	Steedman-Coweta complex, 2 to 20 percent slopes	0.000	0.360	0.000	0.000	0.008	0.400	0.080	0.080	0.000
Gulf Coast	OK	Coal	103.972	104.024	0.052	OK029	Homa-Clearview complex, 3 to 5 percent slopes	0.000	0.000	0.000	0.050	0.001	0.052	0.000	0.013	0.000
Gulf Coast	OK	Coal	104.024	104.094	0.070	OK029	Dennis loam, 3 to 5 percent slopes, eroded	0.000	0.000	0.000	0.000	0.001	0.070	0.000	0.000	0.000
Gulf Coast	OK	Coal	104.094	104.185	0.091	OK029	Clearview fine sandy loam, 3 to 5 percent slopes, eroded	0.000	0.000	0.000	0.000	0.002	0.091	0.000	0.078	0.000
Gulf Coast	OK	Coal	104.185	104.235	0.050	OK029	Homa-Hector complex, 12 to 20 percent slopes	0.000	0.045	0.000	0.000	0.001	0.050	0.012	0.012	0.000
Gulf Coast	OK	Coal	104.235	104.387	0.152	OK029	Homa-Clearview complex, 3 to 5 percent slopes	0.000	0.000	0.000	0.144	0.003	0.152	0.000	0.038	0.000
Gulf Coast	OK	Coal	104.387	104.778	0.391	OK029	Homa-Hector complex, 12 to 20 percent slopes	0.000	0.352	0.000	0.000	0.008	0.391	0.098	0.098	0.000
Gulf Coast	OK	Coal	104.778	104.961	0.184	OK029	Clearview fine sandy loam, 1 to 3 percent slopes	0.000	0.000	0.000	0.175	0.004	0.184	0.000	0.175	0.000
Gulf Coast	OK	Coal	104.961	105.013	0.052	OK029	Dennis loam, 3 to 5 percent slopes	0.000	0.000	0.000	0.049	0.001	0.052	0.000	0.000	0.000
Gulf Coast	OK	Coal	105.013	105.171	0.158	OK029	Homa-Hector complex, 12 to 20 percent slopes	0.000	0.142	0.000	0.000	0.003	0.158	0.040	0.040	0.000
Gulf Coast	OK	Coal	105.171	105.227	0.056	OK029	Clearview fine sandy loam, 1 to 3 percent slopes	0.000	0.000	0.000	0.053	0.001	0.056	0.000	0.053	0.000
Gulf Coast	OK	Coal	105.227	105.300	0.073	OK029	Dennis loam, 3 to 5 percent slopes	0.000	0.000	0.000	0.069	0.001	0.073	0.000	0.000	0.000
Gulf Coast	OK	Coal	105.300	105.382	0.082	OK029	Homa-Clearview complex, 3 to 5 percent slopes	0.000	0.000	0.000	0.078	0.002	0.082	0.000	0.020	0.000
Gulf Coast	OK	Coal	105.382	105.491	0.110	OK029	Homa-Hector complex, 12 to 20 percent slopes	0.000	0.099	0.000	0.000	0.002	0.110	0.027	0.027	0.000
Gulf Coast	OK	Coal	105.491	105.551	0.060	OK029	Homa-Clearview complex, 3 to 5 percent slopes	0.000	0.000	0.000	0.057	0.001	0.060	0.000	0.015	0.000
Gulf Coast	OK	Coal	105.551	105.663	0.112	OK029	Dennis loam, 3 to 5 percent slopes, eroded	0.000	0.000	0.000	0.000	0.002	0.112	0.000	0.000	0.000
Gulf Coast	OK	Coal	105.663	105.793	0.129	OK029	Parsons silt loam, 1 to 3 percent slopes	0.000	0.000	0.000	0.123	0.003	0.129	0.000	0.000	0.000
Gulf	OK	Coal	105.793	105.828	0.035	OK029	Dennis loam, 1 to 3 percent slopes	0.000	0.000	0.000	0.032	0.001	0.035	0.000	0.000	0.000

Appendix K – Soils by Milepost – Gulf Coast Section

Pipeline Segment		County	Beginning Milepost	Ending Milepost	Miles	Soil Series	Soil Series Name	Wind (miles)	water (miles)	Low revegetation potential (miles)	Prime Farmland (miles)	Hydric (miles)	Compaction Prone (miles)	Stony-Rocky (miles)	Shallow Bedrock (miles)	Droughty (miles)
Coast																
Gulf Coast	OK	Coal	105.828	105.857	0.029	OK029	Steedman-Coweta complex, 2 to 20 percent slopes	0.000	0.026	0.000	0.000	0.001	0.029	0.006	0.006	0.000
Gulf Coast	OK	Coal	105.857	105.970	0.113	OK029	Dennis loam, 1 to 3 percent slopes	0.000	0.000	0.000	0.102	0.002	0.113	0.000	0.000	0.000
Gulf Coast	OK	Coal	105.970	106.030	0.061	OK029	Parsons silt loam, 1 to 3 percent slopes	0.000	0.000	0.000	0.057	0.001	0.061	0.000	0.000	0.000
Gulf Coast	OK	Coal	106.030	106.059	0.029	OK029	Steedman-Dela complex, 5 to 30 percent slopes	0.000	0.010	0.000	0.000	0.001	0.029	0.000	0.000	0.010
Gulf Coast	OK	Coal	106.059	106.098	0.039	OK029	Parsons silt loam, 1 to 3 percent slopes	0.000	0.000	0.000	0.037	0.001	0.039	0.000	0.000	0.000
Gulf Coast	OK	Coal	106.098	106.180	0.083	OK029	Bates fine sandy loam, 3 to 5 percent slopes	0.000	0.000	0.000	0.078	0.002	0.083	0.078	0.000	0.000
Gulf Coast	OK	Coal	106.180	106.229	0.049	OK029	Clearview fine sandy loam, 3 to 5 percent slopes	0.000	0.000	0.000	0.046	0.001	0.049	0.000	0.046	0.000
Gulf Coast	OK	Coal	106.229	106.290	0.061	OK029	Homa-Clearview complex, 3 to 5 percent slopes	0.000	0.000	0.000	0.058	0.001	0.061	0.000	0.015	0.000
Gulf Coast	OK	Coal	106.290	106.343	0.053	OK029	Homa-Hector complex, 12 to 20 percent slopes	0.000	0.048	0.000	0.000	0.001	0.053	0.013	0.013	0.000
Gulf Coast	OK	Coal	106.343	106.524	0.181	OK029	Steedman-Coweta complex, 2 to 20 percent slopes	0.000	0.163	0.000	0.000	0.004	0.181	0.036	0.036	0.000
Gulf Coast	OK	Coal	106.524	106.622	0.098	OK029	Parsons silt loam, 1 to 3 percent slopes	0.000	0.000	0.000	0.093	0.002	0.098	0.000	0.000	0.000
Gulf Coast	OK	Coal	106.622	106.964	0.342	OK029	Steedman-Coweta complex, 2 to 20 percent slopes	0.000	0.308	0.000	0.000	0.007	0.342	0.068	0.068	0.000
Gulf Coast	OK	Coal	106.964	107.052	0.088	OK029	Steedman clay loam, 3 to 5 percent slopes	0.000	0.000	0.000	0.079	0.002	0.088	0.000	0.000	0.000
Gulf Coast	OK	Coal	107.052	107.107	0.055	OK029	Parsons silt loam, 1 to 3 percent slopes	0.000	0.000	0.000	0.053	0.001	0.055	0.000	0.000	0.000
Gulf Coast	OK	Coal	107.107	107.150	0.043	OK029	Dela and Wynona soils, 0 to 1 percent slopes, frequently flooded	0.000	0.000	0.000	0.000	0.001	0.043	0.000	0.000	0.022
Gulf Coast	OK	Coal	107.150	107.237	0.087	OK029	Pharoah silt loam, 0 to 1 percent slopes	0.000	0.000	0.083	0.000	0.002	0.087	0.000	0.000	0.000
Gulf Coast	OK	Coal	107.237	107.264	0.027	OK029	Parsons silt loam, 1 to 3 percent slopes	0.000	0.000	0.000	0.025	0.001	0.027	0.000	0.000	0.000
Gulf Coast	OK	Coal	107.264	107.361	0.097	OK029	Pharoah silt loam, 0 to 1 percent slopes	0.000	0.000	0.092	0.000	0.002	0.097	0.000	0.000	0.000
Gulf Coast	OK	Coal	107.361	107.413	0.052	OK029	Dela and Wynona soils, 0 to 1 percent slopes, frequently flooded	0.000	0.000	0.000	0.000	0.001	0.052	0.000	0.000	0.026
Gulf Coast	OK	Coal	107.413	107.447	0.034	OK029	Clearview fine sandy loam, 3 to 5 percent slopes	0.000	0.000	0.000	0.033	0.001	0.034	0.000	0.033	0.000
Gulf Coast	OK	Coal	107.447	107.483	0.036	OK029	Homa-Clearview complex, 3 to 5 percent slopes	0.000	0.000	0.000	0.034	0.001	0.036	0.000	0.009	0.000
Gulf	OK	Coal	107.483	107.622	0.139	OK029	Homa-Hector complex, 12 to 20 percent slopes	0.000	0.125	0.000	0.000	0.003	0.139	0.035	0.035	0.000

Appendix K – Soils by Milepost – Gulf Coast Section

Pipeline Segment		County	Beginning Milepost	Ending Milepost	Miles	Soil Series	Soil Series Name	Wind (miles)	water (miles)	Low revegetation potential (miles)	Prime Farmland (miles)	Hydric (miles)	Compaction Prone (miles)	Stony-Rocky (miles)	Shallow Bedrock (miles)	Droughty (miles)
Coast																
Gulf Coast	OK	Coal	107.622	107.667	0.045	OK029	Homa-Clearview complex, 3 to 5 percent slopes	0.000	0.000	0.000	0.043	0.001	0.045	0.000	0.011	0.000
Gulf Coast	OK	Coal	107.667	107.799	0.133	OK029	Clearview fine sandy loam, 3 to 5 percent slopes	0.000	0.000	0.000	0.126	0.003	0.133	0.000	0.126	0.000
Gulf Coast	OK	Coal	107.799	108.233	0.434	OK029	Dennis loam, 3 to 5 percent slopes, eroded	0.000	0.000	0.000	0.000	0.009	0.434	0.000	0.000	0.000
Gulf Coast	OK	Coal	108.233	108.603	0.370	OK029	Pharoah silt loam, 0 to 1 percent slopes	0.000	0.000	0.352	0.000	0.007	0.370	0.000	0.000	0.000
Gulf Coast	OK	Coal	108.603	108.666	0.063	OK029	Dela and Wynona soils, 0 to 1 percent slopes, frequently flooded	0.000	0.000	0.000	0.000	0.001	0.063	0.000	0.000	0.031
Gulf Coast	OK	Coal	108.666	108.716	0.050	OK029	Wynona silt loam, 0 to 1 percent slopes, occasionally flooded	0.000	0.000	0.000	0.000	0.001	0.050	0.000	0.000	0.000
Gulf Coast	OK	Coal	108.716	108.822	0.106	OK029	Dennis loam, 1 to 3 percent slopes	0.000	0.000	0.000	0.096	0.002	0.106	0.000	0.000	0.000
Gulf Coast	OK	Coal	108.822	108.925	0.103	OK029	Wynona silt loam, 0 to 1 percent slopes, occasionally flooded	0.000	0.000	0.000	0.000	0.002	0.103	0.000	0.000	0.000
Gulf Coast	OK	Coal	108.925	109.112	0.187	OK029	Dennis loam, 1 to 3 percent slopes	0.000	0.000	0.000	0.168	0.004	0.187	0.000	0.000	0.000
Gulf Coast	OK	Coal	109.112	109.154	0.042	OK029	Dela and Wynona soils, 0 to 1 percent slopes, frequently flooded	0.000	0.000	0.000	0.000	0.001	0.042	0.000	0.000	0.021
Gulf Coast	OK	Coal	109.154	109.178	0.024	OK029	Clearview fine sandy loam, 3 to 5 percent slopes, eroded	0.000	0.000	0.000	0.000	0.000	0.024	0.000	0.020	0.000
Gulf Coast	OK	Coal	109.178	109.412	0.234	OK029	Dennis loam, 1 to 3 percent slopes	0.000	0.000	0.000	0.210	0.005	0.234	0.000	0.000	0.000
Gulf Coast	OK	Coal	109.412	109.465	0.054	OK029	Dela and Wynona soils, 0 to 1 percent slopes, frequently flooded	0.000	0.000	0.000	0.000	0.001	0.054	0.000	0.000	0.027
Gulf Coast	OK	Coal	109.465	109.685	0.220	OK029	Clearview fine sandy loam, 3 to 5 percent slopes	0.000	0.000	0.000	0.209	0.004	0.220	0.000	0.209	0.000
Gulf Coast	OK	Coal	109.685	109.976	0.291	OK029	Bates fine sandy loam, 3 to 5 percent slopes	0.000	0.000	0.000	0.276	0.006	0.291	0.276	0.000	0.000
Gulf Coast	OK	Coal	109.976	110.055	0.079	OK029	Steedman-Coweta complex, 2 to 20 percent slopes	0.000	0.071	0.000	0.000	0.002	0.079	0.016	0.016	0.000
Gulf Coast	OK	Coal	110.055	110.093	0.038	OK029	Homa-Hector complex, 12 to 20 percent slopes	0.000	0.034	0.000	0.000	0.001	0.038	0.010	0.010	0.000
Gulf Coast	OK	Coal	110.093	110.372	0.280	OK029	Homa-Clearview complex, 3 to 5 percent slopes	0.000	0.000	0.000	0.266	0.006	0.280	0.000	0.070	0.000
Gulf Coast	OK	Coal	110.372	110.384	0.012	OK029	Clearview fine sandy loam, 1 to 3 percent slopes	0.000	0.000	0.000	0.011	0.000	0.012	0.000	0.011	0.000
Gulf Coast	OK	Coal	110.384	110.433	0.049	OK029	Homa-Clearview complex, 3 to 5 percent slopes	0.000	0.000	0.000	0.047	0.001	0.049	0.000	0.012	0.000
Gulf Coast	OK	Coal	110.433	110.470	0.037	OK029	Homa-Hector complex, 12 to 20 percent slopes	0.000	0.033	0.000	0.000	0.001	0.037	0.009	0.009	0.000
Gulf	OK	Coal	110.470	110.611	0.141	OK029	Steedman-Coweta complex, 2 to 20 percent slopes	0.000	0.127	0.000	0.000	0.003	0.141	0.028	0.028	0.000

Appendix K – Soils by Milepost – Gulf Coast Section

Pipeline Segment		County	Beginning Milepost	Ending Milepost	Miles	Soil Series	Soil Series Name	Wind (miles)	water (miles)	Low revegetation potential (miles)	Prime Farmland (miles)	Hydric (miles)	Compaction Prone (miles)	Stony-Rocky (miles)	Shallow Bedrock (miles)	Droughty (miles)
Coast																
Gulf Coast	OK	Coal	110.611	110.657	0.046	OK029	Dela and Wynona soils, 0 to 1 percent slopes, frequently flooded	0.000	0.000	0.000	0.000	0.001	0.046	0.000	0.000	0.023
Gulf Coast	OK	Coal	110.657	110.711	0.054	OK029	Rexor loam, 0 to 1 percent slopes, occasionally flooded	0.000	0.000	0.000	0.052	0.001	0.054	0.000	0.000	0.000
Gulf Coast	OK	Coal	110.711	110.872	0.161	OK029	Pharoah silt loam, 0 to 1 percent slopes	0.000	0.000	0.153	0.000	0.003	0.161	0.000	0.000	0.000
Gulf Coast	OK	Coal	110.872	111.071	0.199	OK029	Dennis loam, 1 to 3 percent slopes	0.000	0.000	0.000	0.179	0.004	0.199	0.000	0.000	0.000
Gulf Coast	OK	Coal	111.071	111.096	0.025	OK029	Dela and Wynona soils, 0 to 1 percent slopes, frequently flooded	0.000	0.000	0.000	0.000	0.001	0.025	0.000	0.000	0.013
Gulf Coast	OK	Coal	111.096	111.158	0.061	OK029	Parsons silt loam, 1 to 3 percent slopes	0.000	0.000	0.000	0.058	0.001	0.061	0.000	0.000	0.000
Gulf Coast	OK	Coal	111.158	111.310	0.152	OK029	Dennis loam, 3 to 5 percent slopes, eroded	0.000	0.000	0.000	0.000	0.003	0.152	0.000	0.000	0.000
Gulf Coast	OK	Coal	111.310	111.375	0.065	OK029	Bates and Dennis soils, 3 to 5 percent slopes, severely eroded	0.000	0.000	0.000	0.000	0.001	0.065	0.029	0.000	0.000
Gulf Coast	OK	Coal	111.375	111.402	0.027	OK029	Dennis loam, 3 to 5 percent slopes, eroded	0.000	0.000	0.000	0.000	0.001	0.027	0.000	0.000	0.000
Gulf Coast	OK	Coal	111.402	111.499	0.097	OK029	Bates and Dennis soils, 3 to 5 percent slopes, severely eroded	0.000	0.000	0.000	0.000	0.002	0.097	0.044	0.000	0.000
Gulf Coast	OK	Coal	111.499	111.713	0.213	OK029	Dennis loam, 3 to 5 percent slopes, eroded	0.000	0.000	0.000	0.000	0.004	0.213	0.000	0.000	0.000
Gulf Coast	OK	Coal	111.713	111.949	0.236	OK029	Parsons silt loam, 1 to 3 percent slopes	0.000	0.000	0.000	0.224	0.005	0.236	0.000	0.000	0.000
Gulf Coast	OK	Coal	111.949	112.002	0.053	OK029	Parsons silt loam, 0 to 1 percent slopes	0.000	0.000	0.000	0.045	0.001	0.053	0.000	0.000	0.000
Gulf Coast	OK	Coal	112.002	112.394	0.393	OK029	Parsons silt loam, 1 to 3 percent slopes	0.000	0.000	0.000	0.373	0.008	0.393	0.000	0.000	0.000
Gulf Coast	OK	Coal	112.394	112.422	0.028	OK029	Steedman-Dela complex, 5 to 30 percent slopes	0.000	0.010	0.000	0.000	0.001	0.028	0.000	0.000	0.009
Gulf Coast	OK	Coal	112.422	112.539	0.117	OK029	Parsons silt loam, 1 to 3 percent slopes	0.000	0.000	0.000	0.111	0.002	0.117	0.000	0.000	0.000
Gulf Coast	OK	Coal	112.539	112.621	0.082	OK029	Dennis loam, 1 to 3 percent slopes	0.000	0.000	0.000	0.074	0.002	0.082	0.000	0.000	0.000
Gulf Coast	OK	Atoka	112.621	112.646	0.025	OK005	Dennis loam, 1 to 3 percent slopes	0.000	0.000	0.000	0.025	0.000	0.025	0.000	0.000	0.000
Gulf Coast	OK	Atoka	112.646	112.869	0.223	OK005	Parsons silt loam, 1 to 3 percent slopes	0.000	0.000	0.000	0.223	0.004	0.223	0.000	0.000	0.000
Gulf Coast	OK	Atoka	112.869	113.089	0.220	OK005	Bates fine sandy loam, 1 to 3 percent slopes	0.000	0.000	0.000	0.220	0.004	0.220	0.007	0.000	0.000
Gulf Coast	OK	Atoka	113.089	113.484	0.395	OK005	Dennis loam, 1 to 3 percent slopes	0.000	0.000	0.000	0.395	0.008	0.395	0.000	0.000	0.000
Gulf	OK	Atoka	113.484	113.534	0.051	OK005	Parsons silt loam, 1 to 3 percent slopes	0.000	0.000	0.000	0.051	0.001	0.051	0.000	0.000	0.000

Appendix K – Soils by Milepost – Gulf Coast Section

Pipeline Segment		County	Beginning Milepost	Ending Milepost	Miles	Soil Series	Soil Series Name	Wind (miles)	water (miles)	Low revegetation potential (miles)	Prime Farmland (miles)	Hydric (miles)	Compaction Prone (miles)	Stony-Rocky (miles)	Shallow Bedrock (miles)	Droughty (miles)
Coast																
Gulf Coast	OK	Atoka	113.534	113.572	0.037	OK005	Dennis loam, 1 to 3 percent slopes	0.000	0.000	0.000	0.037	0.001	0.037	0.000	0.000	0.000
Gulf Coast	OK	Atoka	113.572	113.670	0.098	OK005	Dennis and Eram soils, 3 to 8 percent slopes, severely eroded	0.000	0.000	0.000	0.000	0.002	0.098	0.005	0.000	0.000
Gulf Coast	OK	Atoka	113.670	113.784	0.114	OK005	Parsons silt loam, 1 to 3 percent slopes	0.000	0.000	0.000	0.114	0.002	0.114	0.000	0.000	0.000
Gulf Coast	OK	Atoka	113.784	113.865	0.081	OK005	Eram clay loam, 3 to 5 percent slopes	0.000	0.000	0.000	0.081	0.002	0.081	0.004	0.000	0.000
Gulf Coast	OK	Atoka	113.865	113.977	0.111	OK005	Parsons silt loam, 1 to 3 percent slopes	0.000	0.000	0.000	0.111	0.002	0.111	0.000	0.000	0.000
Gulf Coast	OK	Atoka	113.977	114.031	0.055	OK005	Eram clay loam, 3 to 5 percent slopes	0.000	0.000	0.000	0.055	0.001	0.055	0.003	0.000	0.000
Gulf Coast	OK	Atoka	114.031	114.111	0.080	OK005	Bates-Coweta complex, 3 to 5 percent slopes	0.000	0.000	0.000	0.080	0.002	0.080	0.032	0.000	0.000
Gulf Coast	OK	Atoka	114.111	114.238	0.127	OK005	Eram clay loam, 3 to 5 percent slopes	0.000	0.000	0.000	0.127	0.003	0.127	0.006	0.000	0.000
Gulf Coast	OK	Atoka	114.238	114.304	0.066	OK005	Parsons silt loam, 1 to 3 percent slopes, eroded	0.000	0.000	0.000	0.000	0.001	0.066	0.000	0.000	0.000
Gulf Coast	OK	Atoka	114.304	114.331	0.028	OK005	Parsons silt loam, 1 to 3 percent slopes	0.000	0.000	0.000	0.028	0.001	0.028	0.000	0.000	0.000
Gulf Coast	OK	Atoka	114.331	114.578	0.247	OK005	Parsons silt loam, 1 to 3 percent slopes, eroded	0.000	0.000	0.000	0.000	0.005	0.247	0.000	0.000	0.000
Gulf Coast	OK	Atoka	114.578	114.702	0.124	OK005	Parsons silt loam, 1 to 3 percent slopes	0.000	0.000	0.000	0.124	0.002	0.124	0.000	0.000	0.000
Gulf Coast	OK	Atoka	114.702	114.752	0.050	OK005	Dennis loam, 3 to 5 percent slopes, eroded	0.000	0.000	0.000	0.000	0.001	0.050	0.000	0.000	0.000
Gulf Coast	OK	Atoka	114.752	115.147	0.395	OK005	Dennis loam, 1 to 3 percent slopes	0.000	0.000	0.000	0.395	0.008	0.395	0.000	0.000	0.000
Gulf Coast	OK	Atoka	115.147	115.392	0.245	OK005	Bates fine sandy loam, 3 to 5 percent slopes, eroded	0.000	0.000	0.000	0.000	0.005	0.245	0.007	0.000	0.000
Gulf Coast	OK	Atoka	115.392	115.398	0.006	OK005	Dennis loam, 1 to 3 percent slopes	0.000	0.000	0.000	0.006	0.000	0.006	0.000	0.000	0.000
Gulf Coast	OK	Atoka	115.398	115.507	0.109	OK005	Bates fine sandy loam, 3 to 5 percent slopes, eroded	0.000	0.000	0.000	0.000	0.002	0.109	0.003	0.000	0.000
Gulf Coast	OK	Atoka	115.507	115.512	0.004	OK005	Eram clay loam, 5 to 8 percent slopes	0.000	0.000	0.000	0.000	0.000	0.004	0.000	0.000	0.000
Gulf Coast	OK	Atoka	115.512	115.532	0.020	OK005	Bates fine sandy loam, 3 to 5 percent slopes, eroded	0.000	0.000	0.000	0.000	0.000	0.020	0.001	0.000	0.000
Gulf Coast	OK	Atoka	115.532	115.640	0.109	OK005	Eram clay loam, 5 to 8 percent slopes	0.000	0.000	0.000	0.000	0.002	0.109	0.011	0.000	0.000
Gulf Coast	OK	Atoka	115.640	115.706	0.066	OK005	Bates-Coweta complex, 3 to 5 percent slopes	0.000	0.000	0.000	0.066	0.001	0.066	0.026	0.000	0.000
Gulf	OK	Atoka	115.706	115.772	0.066	OK005	Eram clay loam, 5 to 8 percent slopes	0.000	0.000	0.000	0.000	0.001	0.066	0.007	0.000	0.000

Appendix K – Soils by Milepost – Gulf Coast Section

Pipeline Segment		County	Beginning Milepost	Ending Milepost	Miles	Soil Series	Soil Series Name	Wind (miles)	water (miles)	Low revegetation potential (miles)	Prime Farmland (miles)	Hydric (miles)	Compaction Prone (miles)	Stony-Rocky (miles)	Shallow Bedrock (miles)	Droughty (miles)
Coast																
Gulf Coast	OK	Atoka	115.772	115.822	0.050	OK005	Dennis loam, 1 to 3 percent slopes	0.000	0.000	0.000	0.050	0.001	0.050	0.000	0.000	0.000
Gulf Coast	OK	Atoka	115.822	115.914	0.092	OK005	Parsons silt loam, 1 to 3 percent slopes	0.000	0.000	0.000	0.092	0.002	0.092	0.000	0.000	0.000
Gulf Coast	OK	Atoka	115.914	116.114	0.200	OK005	Dennis loam, 3 to 5 percent slopes, eroded	0.000	0.000	0.000	0.000	0.004	0.200	0.000	0.000	0.000
Gulf Coast	OK	Atoka	116.114	116.255	0.141	OK005	Parsons silt loam, 1 to 3 percent slopes, eroded	0.000	0.000	0.000	0.000	0.003	0.141	0.000	0.000	0.000
Gulf Coast	OK	Atoka	116.255	116.344	0.089	OK005	Parsons silt loam, 1 to 3 percent slopes	0.000	0.000	0.000	0.089	0.002	0.089	0.000	0.000	0.000
Gulf Coast	OK	Atoka	116.344	116.392	0.048	OK005	Dennis loam, 1 to 3 percent slopes	0.000	0.000	0.000	0.048	0.001	0.048	0.000	0.000	0.000
Gulf Coast	OK	Atoka	116.392	116.448	0.056	OK005	Eram clay loam, 3 to 5 percent slopes	0.000	0.000	0.000	0.056	0.001	0.056	0.003	0.000	0.000
Gulf Coast	OK	Atoka	116.448	116.496	0.048	OK005	Dennis loam, 1 to 3 percent slopes	0.000	0.000	0.000	0.048	0.001	0.048	0.000	0.000	0.000
Gulf Coast	OK	Atoka	116.496	116.530	0.034	OK005	Eram clay loam, 3 to 5 percent slopes	0.000	0.000	0.000	0.034	0.001	0.034	0.002	0.000	0.000
Gulf Coast	OK	Atoka	116.530	116.631	0.101	OK005	Eram clay loam, 5 to 8 percent slopes	0.000	0.000	0.000	0.000	0.002	0.101	0.010	0.000	0.000
Gulf Coast	OK	Atoka	116.631	116.645	0.014	OK005	Dennis loam, 1 to 3 percent slopes	0.000	0.000	0.000	0.014	0.000	0.014	0.000	0.000	0.000
Gulf Coast	OK	Atoka	116.645	116.961	0.316	OK005	Parsons silt loam, 1 to 3 percent slopes	0.000	0.000	0.000	0.316	0.006	0.316	0.000	0.000	0.000
Gulf Coast	OK	Atoka	116.961	117.316	0.355	OK005	Dennis loam, 3 to 5 percent slopes, eroded	0.000	0.000	0.000	0.000	0.007	0.355	0.000	0.000	0.000
Gulf Coast	OK	Atoka	117.316	117.409	0.093	OK005	Dennis and Eram soils, 3 to 8 percent slopes, severely eroded	0.000	0.000	0.000	0.000	0.002	0.093	0.005	0.000	0.000
Gulf Coast	OK	Atoka	117.409	117.471	0.062	OK005	Hamden fine sandy loam, 0 to 2 percent slopes	0.000	0.000	0.000	0.062	0.001	0.062	0.000	0.000	0.000
Gulf Coast	OK	Atoka	117.471	117.540	0.069	OK005	Dennis and Eram soils, 3 to 8 percent slopes, severely eroded	0.000	0.000	0.000	0.000	0.001	0.069	0.003	0.000	0.000
Gulf Coast	OK	Atoka	117.540	117.594	0.054	OK005	Hamden fine sandy loam, 0 to 2 percent slopes	0.000	0.000	0.000	0.054	0.001	0.054	0.000	0.000	0.000
Gulf Coast	OK	Atoka	117.594	117.653	0.059	OK005	Wrightsville silt loam, 0 to 1 percent slopes	0.000	0.000	0.000	0.000	0.001	0.059	0.000	0.000	0.000
Gulf Coast	OK	Atoka	117.653	117.774	0.121	OK005	Bernow fine sandy loam, 1 to 3 percent slopes	0.006	0.000	0.000	0.121	0.002	0.121	0.000	0.000	0.006
Gulf Coast	OK	Atoka	117.774	117.976	0.203	OK005	Bernow fine sandy loam, 1 to 5 percent slopes, eroded	0.000	0.000	0.000	0.000	0.004	0.203	0.010	0.000	0.010
Gulf Coast	OK	Atoka	117.976	118.172	0.196	OK005	Bernow fine sandy loam, 1 to 3 percent slopes	0.010	0.000	0.000	0.196	0.004	0.196	0.000	0.000	0.010
Gulf	OK	Atoka	118.172	118.207	0.035	OK005	Bosville fine sandy loam, 5 to 12 percent slopes	0.000	0.035	0.000	0.000	0.001	0.035	0.002	0.000	0.002

Appendix K – Soils by Milepost – Gulf Coast Section

Pipeline Segment		County	Beginning Milepost	Ending Milepost	Miles	Soil Series	Soil Series Name	Wind (miles)	water (miles)	Low revegetation potential (miles)	Prime Farmland (miles)	Hydric (miles)	Compaction Prone (miles)	Stony-Rocky (miles)	Shallow Bedrock (miles)	Droughty (miles)
Coast																
Gulf Coast	OK	Atoka	118.207	118.211	0.005	OK005	Bernow fine sandy loam, 1 to 3 percent slopes	0.000	0.000	0.000	0.005	0.000	0.005	0.000	0.000	0.000
Gulf Coast	OK	Atoka	118.211	118.296	0.084	OK005	Bernow fine sandy loam, 1 to 5 percent slopes, eroded	0.000	0.000	0.000	0.000	0.002	0.084	0.004	0.000	0.004
Gulf Coast	OK	Atoka	118.296	118.335	0.039	OK005	Bernow fine sandy loam, 1 to 3 percent slopes	0.002	0.000	0.000	0.039	0.001	0.039	0.000	0.000	0.002
Gulf Coast	OK	Atoka	118.335	118.398	0.063	OK005	Bernow fine sandy loam, 1 to 5 percent slopes, eroded	0.000	0.000	0.000	0.000	0.001	0.063	0.003	0.000	0.003
Gulf Coast	OK	Atoka	118.398	118.582	0.184	OK005	Bernow fine sandy loam, 1 to 3 percent slopes	0.009	0.000	0.000	0.184	0.004	0.184	0.000	0.000	0.009
Gulf Coast	OK	Atoka	118.582	118.677	0.096	OK005	Bernow fine sandy loam, 5 to 8 percent slopes	0.005	0.000	0.000	0.096	0.002	0.096	0.000	0.000	0.005
Gulf Coast	OK	Atoka	118.677	118.796	0.119	OK005	Bernow fine sandy loam, 1 to 3 percent slopes	0.006	0.000	0.000	0.119	0.002	0.119	0.000	0.000	0.006
Gulf Coast	OK	Atoka	118.796	118.852	0.056	OK005	Hamden fine sandy loam, 0 to 2 percent slopes	0.000	0.000	0.000	0.056	0.001	0.056	0.000	0.000	0.000
Gulf Coast	OK	Atoka	118.852	119.053	0.201	OK005	Stigler very fine sandy loam, 0 to 1 percent slopes	0.000	0.000	0.000	0.201	0.004	0.201	0.000	0.000	0.000
Gulf Coast	OK	Atoka	119.053	119.241	0.188	OK005	Bernow fine sandy loam, 1 to 3 percent slopes	0.009	0.000	0.000	0.188	0.004	0.188	0.000	0.000	0.009
Gulf Coast	OK	Atoka	119.241	119.413	0.173	OK005	Bernow fine sandy loam, 0 to 1 percent slopes	0.009	0.000	0.000	0.173	0.003	0.173	0.000	0.000	0.009
Gulf Coast	OK	Atoka	119.413	119.699	0.286	OK005	Bernow fine sandy loam, 5 to 8 percent slopes	0.014	0.000	0.000	0.286	0.006	0.286	0.000	0.000	0.014
Gulf Coast	OK	Atoka	119.699	119.748	0.049	OK005	Bernow fine sandy loam, 1 to 3 percent slopes	0.002	0.000	0.000	0.049	0.001	0.049	0.000	0.000	0.002
Gulf Coast	OK	Atoka	119.748	119.912	0.164	OK005	Bernow fine sandy loam, 5 to 8 percent slopes	0.008	0.000	0.000	0.164	0.003	0.164	0.000	0.000	0.008
Gulf Coast	OK	Atoka	119.912	120.113	0.201	OK005	Bernow fine sandy loam, 3 to 5 percent slopes	0.004	0.000	0.000	0.201	0.004	0.201	0.000	0.000	0.004
Gulf Coast	OK	Atoka	120.113	120.175	0.062	OK005	Bernow fine sandy loam, 5 to 8 percent slopes	0.003	0.000	0.000	0.062	0.001	0.062	0.000	0.000	0.003
Gulf Coast	OK	Atoka	120.175	120.407	0.232	OK005	Bernow fine sandy loam, 1 to 3 percent slopes	0.012	0.000	0.000	0.232	0.005	0.232	0.000	0.000	0.012
Gulf Coast	OK	Atoka	120.407	120.463	0.055	OK005	Bernow fine sandy loam, 3 to 5 percent slopes	0.001	0.000	0.000	0.055	0.001	0.055	0.000	0.000	0.001
Gulf Coast	OK	Atoka	120.463	120.569	0.107	OK005	Bernow fine sandy loam, 5 to 8 percent slopes	0.005	0.000	0.000	0.107	0.002	0.107	0.000	0.000	0.005
Gulf Coast	OK	Atoka	120.569	120.614	0.045	OK005	Bernow fine sandy loam, 1 to 3 percent slopes	0.002	0.000	0.000	0.045	0.001	0.045	0.000	0.000	0.002
Gulf Coast	OK	Atoka	120.614	120.704	0.090	OK005	Bosville fine sandy loam, 3 to 5 percent slopes	0.000	0.000	0.000	0.090	0.002	0.090	0.006	0.000	0.006
Gulf	OK	Atoka	120.704	120.740	0.036	OK005	Boggy fine sandy loam, 0 to 1 percent slopes,	0.000	0.000	0.000	0.000	0.001	0.036	0.000	0.000	0.000

Appendix K – Soils by Milepost – Gulf Coast Section

Pipeline Segment		County	Beginning Milepost	Ending Milepost	Miles	Soil Series	Soil Series Name	Wind (miles)	water (miles)	Low revegetation potential (miles)	Prime Farmland (miles)	Hydric (miles)	Compaction Prone (miles)	Stony-Rocky (miles)	Shallow Bedrock (miles)	Droughty (miles)
Coast							frequently flooded									
Gulf Coast	OK	Atoka	120.740	120.756	0.017	OK005	Bernow fine sandy loam, 5 to 8 percent slopes	0.001	0.000	0.000	0.017	0.000	0.017	0.000	0.000	0.001
Gulf Coast	OK	Atoka	120.756	120.787	0.031	OK005	Larue loamy fine sand, 0 to 3 percent slopes	0.029	0.000	0.000	0.000	0.001	0.031	0.000	0.000	0.029
Gulf Coast	OK	Atoka	120.787	120.913	0.125	OK005	Bernow fine sandy loam, 5 to 8 percent slopes	0.006	0.000	0.000	0.125	0.003	0.125	0.000	0.000	0.006
Gulf Coast	OK	Atoka	120.913	120.955	0.042	OK005	Bernow fine sandy loam, 1 to 3 percent slopes	0.002	0.000	0.000	0.042	0.001	0.042	0.000	0.000	0.002
Gulf Coast	OK	Atoka	120.955	121.092	0.137	OK005	Bernow fine sandy loam, 5 to 8 percent slopes	0.007	0.000	0.000	0.137	0.003	0.137	0.000	0.000	0.007
Gulf Coast	OK	Atoka	121.092	121.198	0.106	OK005	Bernow fine sandy loam, 3 to 8 percent slopes, gullied	0.000	0.000	0.000	0.000	0.002	0.106	0.008	0.000	0.008
Gulf Coast	OK	Atoka	121.198	121.270	0.072	OK005	Bernow fine sandy loam, 5 to 8 percent slopes	0.004	0.000	0.000	0.072	0.001	0.072	0.000	0.000	0.004
Gulf Coast	OK	Atoka	121.270	121.589	0.319	OK005	Bernow fine sandy loam, 3 to 8 percent slopes, gullied	0.000	0.000	0.000	0.000	0.006	0.319	0.025	0.000	0.025
Gulf Coast	OK	Atoka	121.589	121.599	0.011	OK005	Bernow fine sandy loam, 1 to 3 percent slopes	0.001	0.000	0.000	0.011	0.000	0.011	0.000	0.000	0.001
Gulf Coast	OK	Atoka	121.599	121.728	0.129	OK005	Bernow fine sandy loam, 3 to 8 percent slopes, gullied	0.000	0.000	0.000	0.000	0.003	0.129	0.010	0.000	0.010
Gulf Coast	OK	Atoka	121.728	121.872	0.144	OK005	Boggy fine sandy loam, 0 to 1 percent slopes, frequently flooded	0.000	0.000	0.000	0.000	0.003	0.144	0.000	0.000	0.000
Gulf Coast	OK	Atoka	121.872	121.934	0.062	OK005	Guyton silt loam, 0 to 1 percent slopes, occasionally flooded	0.000	0.000	0.000	0.000	0.001	0.062	0.000	0.000	0.000
Gulf Coast	OK	Atoka	121.934	122.346	0.412	OK005	Boggy fine sandy loam, 0 to 1 percent slopes, frequently flooded	0.000	0.000	0.000	0.000	0.008	0.412	0.000	0.000	0.000
Gulf Coast	OK	Atoka	122.346	122.498	0.152	OK005	Dela fine sandy loam, 0 to 1 percent slopes, occasionally flooded	0.000	0.000	0.000	0.152	0.003	0.152	0.000	0.000	0.000
Gulf Coast	OK	Atoka	122.498	122.584	0.086	OK005	Bernow-Romia complex, 8 to 12 percent slopes	0.006	0.080	0.000	0.000	0.002	0.086	0.021	0.000	0.027
Gulf Coast	OK	Atoka	122.584	122.607	0.023	OK005	Bernow fine sandy loam, 5 to 8 percent slopes	0.001	0.000	0.000	0.023	0.000	0.023	0.000	0.000	0.001
Gulf Coast	OK	Atoka	122.607	122.644	0.037	OK005	Bernow fine sandy loam, 1 to 3 percent slopes	0.002	0.000	0.000	0.037	0.001	0.037	0.000	0.000	0.002
Gulf Coast	OK	Atoka	122.644	122.848	0.204	OK005	Bernow fine sandy loam, 3 to 5 percent slopes	0.004	0.000	0.000	0.204	0.004	0.204	0.000	0.000	0.004
Gulf Coast	OK	Atoka	122.848	122.868	0.020	OK005	Bernow fine sandy loam, 5 to 8 percent slopes	0.001	0.000	0.000	0.020	0.000	0.020	0.000	0.000	0.001
Gulf Coast	OK	Atoka	122.868	122.969	0.100	OK005	Bernow fine sandy loam, 1 to 3 percent slopes	0.005	0.000	0.000	0.100	0.002	0.100	0.000	0.000	0.005
Gulf Coast	OK	Atoka	122.969	123.011	0.043	OK005	Bernow fine sandy loam, 5 to 8 percent slopes	0.002	0.000	0.000	0.043	0.001	0.043	0.000	0.000	0.002
Gulf	OK	Atoka	123.011	123.125	0.114	OK005	Bosville fine sandy loam, 5 to 12 percent slopes	0.000	0.114	0.000	0.000	0.002	0.114	0.008	0.000	0.008

Appendix K – Soils by Milepost – Gulf Coast Section

Pipeline Segment		County	Beginning Milepost	Ending Milepost	Miles	Soil Series	Soil Series Name	Wind (miles)	water (miles)	Low revegetation potential (miles)	Prime Farmland (miles)	Hydric (miles)	Compaction Prone (miles)	Stony-Rocky (miles)	Shallow Bedrock (miles)	Droughty (miles)
Coast																
Gulf Coast	OK	Atoka	123.125	123.234	0.109	OK005	Bernow fine sandy loam, 3 to 5 percent slopes	0.002	0.000	0.000	0.109	0.002	0.109	0.000	0.000	0.002
Gulf Coast	OK	Atoka	123.234	123.324	0.090	OK005	Bernow fine sandy loam, 5 to 8 percent slopes	0.004	0.000	0.000	0.090	0.002	0.090	0.000	0.000	0.004
Gulf Coast	OK	Atoka	123.324	123.566	0.242	OK005	Boggy fine sandy loam, 0 to 1 percent slopes, frequently flooded	0.000	0.000	0.000	0.000	0.005	0.242	0.000	0.000	0.000
Gulf Coast	OK	Atoka	123.566	123.628	0.062	OK005	Bernow fine sandy loam, 5 to 8 percent slopes	0.003	0.000	0.000	0.062	0.001	0.062	0.000	0.000	0.003
Gulf Coast	OK	Atoka	123.628	123.657	0.029	OK005	Bernow fine sandy loam, 3 to 5 percent slopes	0.001	0.000	0.000	0.029	0.001	0.029	0.000	0.000	0.001
Gulf Coast	OK	Atoka	123.657	123.681	0.024	OK005	Bernow fine sandy loam, 5 to 8 percent slopes	0.001	0.000	0.000	0.024	0.000	0.024	0.000	0.000	0.001
Gulf Coast	OK	Atoka	123.681	123.761	0.080	OK005	Bernow fine sandy loam, 3 to 5 percent slopes	0.002	0.000	0.000	0.080	0.002	0.080	0.000	0.000	0.002
Gulf Coast	OK	Atoka	123.761	123.821	0.060	OK005	Boggy fine sandy loam, 0 to 1 percent slopes, frequently flooded	0.000	0.000	0.000	0.000	0.001	0.060	0.000	0.000	0.000
Gulf Coast	OK	Atoka	123.821	123.871	0.050	OK005	Bosville fine sandy loam, 5 to 12 percent slopes	0.000	0.050	0.000	0.000	0.001	0.050	0.003	0.000	0.003
Gulf Coast	OK	Atoka	123.871	124.007	0.136	OK005	Bosville fine sandy loam, 3 to 5 percent slopes	0.000	0.000	0.000	0.136	0.003	0.136	0.010	0.000	0.010
Gulf Coast	OK	Atoka	124.007	124.023	0.016	OK005	Boggy fine sandy loam, 0 to 1 percent slopes, frequently flooded	0.000	0.000	0.000	0.000	0.000	0.016	0.000	0.000	0.000
Gulf Coast	OK	Atoka	124.023	124.138	0.115	OK005	Bosville fine sandy loam, 3 to 5 percent slopes	0.000	0.000	0.000	0.115	0.002	0.115	0.008	0.000	0.008
Gulf Coast	OK	Atoka	124.138	124.246	0.108	OK005	Bosville fine sandy loam, 5 to 12 percent slopes	0.000	0.108	0.000	0.000	0.002	0.108	0.008	0.000	0.008
Gulf Coast	OK	Atoka	124.246	124.302	0.056	OK005	Bosville fine sandy loam, 3 to 5 percent slopes	0.000	0.000	0.000	0.056	0.001	0.056	0.004	0.000	0.004
Gulf Coast	OK	Atoka	124.302	124.375	0.073	OK005	Bernow fine sandy loam, 1 to 3 percent slopes	0.004	0.000	0.000	0.073	0.001	0.073	0.000	0.000	0.004
Gulf Coast	OK	Atoka	124.375	124.481	0.106	OK005	Bosville fine sandy loam, 5 to 12 percent slopes	0.000	0.106	0.000	0.000	0.002	0.106	0.007	0.000	0.007
Gulf Coast	OK	Atoka	124.481	124.803	0.322	OK005	Bernow fine sandy loam, 1 to 3 percent slopes	0.016	0.000	0.000	0.322	0.006	0.322	0.000	0.000	0.016
Gulf Coast	OK	Atoka	124.803	124.971	0.168	OK005	Bernow fine sandy loam, 5 to 8 percent slopes	0.008	0.000	0.000	0.168	0.003	0.168	0.000	0.000	0.008
Gulf Coast	OK	Atoka	124.971	125.110	0.139	OK005	Boggy fine sandy loam, 0 to 1 percent slopes, frequently flooded	0.000	0.000	0.000	0.000	0.003	0.139	0.000	0.000	0.000
Gulf Coast	OK	Atoka	125.110	125.201	0.090	OK005	Bernow fine sandy loam, 3 to 5 percent slopes	0.002	0.000	0.000	0.090	0.002	0.090	0.000	0.000	0.002
Gulf Coast	OK	Atoka	125.201	125.374	0.174	OK005	Bernow fine sandy loam, 5 to 8 percent slopes	0.009	0.000	0.000	0.174	0.003	0.174	0.000	0.000	0.009
Gulf	OK	Atoka	125.374	125.522	0.148	OK005	Larue loamy fine sand, 3 to 8 percent slopes	0.133	0.000	0.000	0.000	0.003	0.148	0.000	0.000	0.133

Appendix K – Soils by Milepost – Gulf Coast Section

Pipeline Segment		County	Beginning Milepost	Ending Milepost	Miles	Soil Series	Soil Series Name	Wind (miles)	water (miles)	Low revegetation potential (miles)	Prime Farmland (miles)	Hydric (miles)	Compaction Prone (miles)	Stony-Rocky (miles)	Shallow Bedrock (miles)	Droughty (miles)
Coast																
Gulf Coast	OK	Atoka	125.522	125.656	0.134	OK005	Dela fine sandy loam, 0 to 1 percent slopes, occasionally flooded	0.000	0.000	0.000	0.134	0.003	0.134	0.000	0.000	0.000
Gulf Coast	OK	Atoka	125.656	125.834	0.178	OK005	Guyton silt loam, 0 to 1 percent slopes, occasionally flooded	0.000	0.000	0.000	0.000	0.004	0.178	0.000	0.000	0.000
Gulf Coast	OK	Atoka	125.834	126.169	0.334	OK005	Kaufman clay, 0 to 1 percent slopes, occasionally flooded	0.000	0.000	0.000	0.334	0.007	0.334	0.000	0.000	0.000
Gulf Coast	OK	Atoka	126.169	126.217	0.049	OK005	Gowton clay loam, 0 to 1 percent slopes, occasionally flooded	0.000	0.000	0.000	0.049	0.001	0.049	0.000	0.000	0.000
Gulf Coast	OK	Atoka	126.217	126.236	0.019	OK005	Kaufman-Gowton complex, 0 to 1 percent slopes, frequently flooded	0.000	0.000	0.000	0.000	0.000	0.019	0.000	0.000	0.000
Gulf Coast	OK	Atoka	126.236	126.249	0.013	OK005	Water	0.000	0.000	0.000	0.000	0.000	0.013	0.000	0.000	0.000
Gulf Coast	OK	Atoka	126.249	126.301	0.052	OK005	Kaufman-Gowton complex, 0 to 1 percent slopes, frequently flooded	0.000	0.000	0.000	0.000	0.001	0.052	0.000	0.000	0.000
Gulf Coast	OK	Atoka	126.301	126.389	0.087	OK005	Kaufman clay, 0 to 1 percent slopes, occasionally flooded	0.000	0.000	0.000	0.087	0.002	0.087	0.000	0.000	0.000
Gulf Coast	OK	Atoka	126.389	126.479	0.091	OK005	Kaufman-Gowton complex, 0 to 1 percent slopes, frequently flooded	0.000	0.000	0.000	0.000	0.002	0.091	0.000	0.000	0.000
Gulf Coast	OK	Atoka	126.479	126.497	0.018	OK005	Gowton clay loam, 0 to 1 percent slopes, occasionally flooded	0.000	0.000	0.000	0.018	0.000	0.018	0.000	0.000	0.000
Gulf Coast	OK	Atoka	126.497	126.618	0.121	OK005	Kaufman clay, 0 to 1 percent slopes, occasionally flooded	0.000	0.000	0.000	0.121	0.002	0.121	0.000	0.000	0.000
Gulf Coast	OK	Atoka	126.618	126.655	0.037	OK005	Kaufman-Gowton complex, 0 to 1 percent slopes, frequently flooded	0.000	0.000	0.000	0.000	0.001	0.037	0.000	0.000	0.000
Gulf Coast	OK	Atoka	126.655	126.696	0.040	OK005	Kaufman clay, 0 to 1 percent slopes, occasionally flooded	0.000	0.000	0.000	0.040	0.001	0.040	0.000	0.000	0.000
Gulf Coast	OK	Atoka	126.696	126.870	0.174	OK005	Dela fine sandy loam, 0 to 1 percent slopes, occasionally flooded	0.000	0.000	0.000	0.174	0.003	0.174	0.000	0.000	0.000
Gulf Coast	OK	Atoka	126.870	127.041	0.171	OK005	Larue loamy fine sand, 0 to 3 percent slopes	0.162	0.000	0.000	0.000	0.003	0.171	0.000	0.000	0.162
Gulf Coast	OK	Atoka	127.041	127.164	0.123	OK005	Dela fine sandy loam, 0 to 1 percent slopes, occasionally flooded	0.000	0.000	0.000	0.123	0.002	0.123	0.000	0.000	0.000
Gulf Coast	OK	Atoka	127.164	127.334	0.169	OK005	Kaufman clay, 0 to 1 percent slopes, occasionally flooded	0.000	0.000	0.000	0.169	0.003	0.169	0.000	0.000	0.000
Gulf Coast	OK	Atoka	127.334	127.462	0.128	OK005	Guyton silt loam, 0 to 1 percent slopes, occasionally flooded	0.000	0.000	0.000	0.000	0.003	0.128	0.000	0.000	0.000
Gulf Coast	OK	Atoka	127.462	127.617	0.155	OK005	Dela fine sandy loam, 0 to 1 percent slopes, occasionally flooded	0.000	0.000	0.000	0.155	0.003	0.155	0.000	0.000	0.000
Gulf Coast	OK	Atoka	127.617	127.808	0.191	OK005	Larue loamy fine sand, 0 to 3 percent slopes	0.182	0.000	0.000	0.000	0.004	0.191	0.000	0.000	0.182
Gulf Coast	OK	Atoka	127.808	127.846	0.038	OK005	Bernow fine sandy loam, 3 to 8 percent slopes, gullied	0.000	0.000	0.000	0.000	0.001	0.038	0.003	0.000	0.003
Gulf	OK	Atoka	127.846	127.999	0.152	OK005	Larue loamy fine sand, 3 to 8 percent slopes	0.137	0.000	0.000	0.000	0.003	0.152	0.000	0.000	0.137

Appendix K – Soils by Milepost – Gulf Coast Section

Pipeline Segment		County	Beginning Milepost	Ending Milepost	Miles	Soil Series	Soil Series Name	Wind (miles)	water (miles)	Low revegetation potential (miles)	Prime Farmland (miles)	Hydric (miles)	Compaction Prone (miles)	Stony-Rocky (miles)	Shallow Bedrock (miles)	Droughty (miles)
Coast																
Gulf Coast	OK	Atoka	127.999	128.031	0.032	OK005	Larue loamy fine sand, 0 to 3 percent slopes	0.030	0.000	0.000	0.000	0.001	0.032	0.000	0.000	0.030
Gulf Coast	OK	Atoka	128.031	128.082	0.051	OK005	Larue loamy fine sand, 3 to 8 percent slopes	0.046	0.000	0.000	0.000	0.001	0.051	0.000	0.000	0.046
Gulf Coast	OK	Atoka	128.082	128.106	0.024	OK005	Larue loamy fine sand, 0 to 3 percent slopes	0.023	0.000	0.000	0.000	0.000	0.024	0.000	0.000	0.023
Gulf Coast	OK	Atoka	128.106	128.334	0.228	OK005	Larue loamy fine sand, 3 to 8 percent slopes	0.205	0.000	0.000	0.000	0.005	0.228	0.000	0.000	0.205
Gulf Coast	OK	Atoka	128.334	128.376	0.042	OK005	Bernow fine sandy loam, 3 to 5 percent slopes	0.001	0.000	0.000	0.042	0.001	0.042	0.000	0.000	0.001
Gulf Coast	OK	Atoka	128.376	128.408	0.032	OK005	Bernow fine sandy loam, 5 to 8 percent slopes	0.002	0.000	0.000	0.032	0.001	0.032	0.000	0.000	0.002
Gulf Coast	OK	Atoka	128.408	128.656	0.248	OK005	Bernow-Romia complex, 8 to 12 percent slopes	0.017	0.231	0.000	0.000	0.005	0.248	0.062	0.000	0.079
Gulf Coast	OK	Atoka	128.656	128.748	0.092	OK005	Bernow fine sandy loam, 3 to 8 percent slopes, gullied	0.000	0.000	0.000	0.000	0.002	0.092	0.007	0.000	0.007
Gulf Coast	OK	Atoka	128.748	128.984	0.235	OK005	Bernow fine sandy loam, 1 to 5 percent slopes, eroded	0.000	0.000	0.000	0.000	0.005	0.235	0.012	0.000	0.012
Gulf Coast	OK	Atoka	128.984	129.068	0.085	OK005	Bernow fine sandy loam, 3 to 8 percent slopes, gullied	0.000	0.000	0.000	0.000	0.002	0.085	0.007	0.000	0.007
Gulf Coast	OK	Atoka	129.068	129.269	0.200	OK005	Bernow-Romia complex, 8 to 12 percent slopes	0.014	0.186	0.000	0.000	0.004	0.200	0.050	0.000	0.064
Gulf Coast	OK	Atoka	129.269	129.282	0.013	OK005	Bernow fine sandy loam, 3 to 5 percent slopes	0.000	0.000	0.000	0.013	0.000	0.013	0.000	0.000	0.000
Gulf Coast	OK	Atoka	129.282	129.330	0.048	OK005	Bernow-Romia complex, 8 to 12 percent slopes	0.003	0.044	0.000	0.000	0.001	0.048	0.012	0.000	0.015
Gulf Coast	OK	Atoka	129.330	129.373	0.044	OK005	Bernow fine sandy loam, 3 to 5 percent slopes	0.001	0.000	0.000	0.044	0.001	0.044	0.000	0.000	0.001
Gulf Coast	OK	Atoka	129.373	129.439	0.066	OK005	Bernow fine sandy loam, 1 to 3 percent slopes	0.003	0.000	0.000	0.066	0.001	0.066	0.000	0.000	0.003
Gulf Coast	OK	Atoka	129.439	129.538	0.099	OK005	Bernow fine sandy loam, 3 to 5 percent slopes	0.002	0.000	0.000	0.099	0.002	0.099	0.000	0.000	0.002
Gulf Coast	OK	Atoka	129.538	129.549	0.011	OK005	Bernow fine sandy loam, 1 to 3 percent slopes	0.001	0.000	0.000	0.011	0.000	0.011	0.000	0.000	0.001
Gulf Coast	OK	Atoka	129.549	129.634	0.085	OK005	Bosville fine sandy loam, 5 to 12 percent slopes	0.000	0.085	0.000	0.000	0.002	0.085	0.006	0.000	0.006
Gulf Coast	OK	Atoka	129.634	129.716	0.081	OK005	Bernow fine sandy loam, 1 to 5 percent slopes, eroded	0.000	0.000	0.000	0.000	0.002	0.081	0.004	0.000	0.004
Gulf Coast	OK	Atoka	129.716	129.755	0.040	OK005	Bosville fine sandy loam, 5 to 12 percent slopes	0.000	0.040	0.000	0.000	0.001	0.040	0.003	0.000	0.003
Gulf Coast	OK	Atoka	129.755	129.761	0.006	OK005	Bernow fine sandy loam, 1 to 5 percent slopes, eroded	0.000	0.000	0.000	0.000	0.000	0.006	0.000	0.000	0.000
Gulf	OK	Atoka	129.761	129.798	0.036	OK005	Bosville fine sandy loam, 5 to 12 percent slopes	0.000	0.036	0.000	0.000	0.001	0.036	0.003	0.000	0.003

Appendix K – Soils by Milepost – Gulf Coast Section

Pipeline Segment		County	Beginning Milepost	Ending Milepost	Miles	Soil Series	Soil Series Name	Wind (miles)	water (miles)	Low revegetation potential (miles)	Prime Farmland (miles)	Hydric (miles)	Compaction Prone (miles)	Stony-Rocky (miles)	Shallow Bedrock (miles)	Droughty (miles)
Coast																
Gulf Coast	OK	Atoka	129.798	129.949	0.151	OK005	Bernow fine sandy loam, 1 to 5 percent slopes, eroded	0.000	0.000	0.000	0.000	0.003	0.151	0.008	0.000	0.008
Gulf Coast	OK	Atoka	129.949	130.106	0.157	OK005	Bosville fine sandy loam, 5 to 12 percent slopes	0.000	0.157	0.000	0.000	0.003	0.157	0.011	0.000	0.011
Gulf Coast	OK	Atoka	130.106	130.202	0.096	OK005	Hamden fine sandy loam, 0 to 2 percent slopes	0.000	0.000	0.000	0.096	0.002	0.096	0.000	0.000	0.000
Gulf Coast	OK	Atoka	130.202	130.275	0.073	OK005	Bosville fine sandy loam, 5 to 12 percent slopes	0.000	0.073	0.000	0.000	0.001	0.073	0.005	0.000	0.005
Gulf Coast	OK	Atoka	130.275	130.341	0.066	OK005	Bernow fine sandy loam, 5 to 8 percent slopes	0.003	0.000	0.000	0.066	0.001	0.066	0.000	0.000	0.003
Gulf Coast	OK	Atoka	130.341	130.388	0.047	OK005	Larue loamy fine sand, 0 to 3 percent slopes	0.045	0.000	0.000	0.000	0.001	0.047	0.000	0.000	0.045
Gulf Coast	OK	Atoka	130.388	130.436	0.048	OK005	Dela fine sandy loam, 0 to 1 percent slopes, occasionally flooded	0.000	0.000	0.000	0.048	0.001	0.048	0.000	0.000	0.000
Gulf Coast	OK	Atoka	130.436	130.479	0.044	OK005	Gowton clay loam, 0 to 1 percent slopes, occasionally flooded	0.000	0.000	0.000	0.044	0.001	0.044	0.000	0.000	0.000
Gulf Coast	OK	Atoka	130.479	130.530	0.050	OK005	Kaufman-Gowton complex, 0 to 1 percent slopes, frequently flooded	0.000	0.000	0.000	0.000	0.001	0.050	0.000	0.000	0.000
Gulf Coast	OK	Atoka	130.530	130.693	0.164	OK005	Trinity clay, 0 to 1 percent slopes, occasionally flooded	0.000	0.000	0.000	0.164	0.003	0.164	0.000	0.000	0.000
Gulf Coast	OK	Atoka	130.693	130.745	0.051	OK005	Kaufman-Gowton complex, 0 to 1 percent slopes, frequently flooded	0.000	0.000	0.000	0.000	0.001	0.051	0.000	0.000	0.000
Gulf Coast	OK	Atoka	130.745	131.058	0.314	OK005	Bosville fine sandy loam, 3 to 5 percent slopes	0.000	0.000	0.000	0.314	0.006	0.314	0.022	0.000	0.022
Gulf Coast	OK	Atoka	131.058	131.168	0.110	OK005	Hamden fine sandy loam, 0 to 2 percent slopes	0.000	0.000	0.000	0.110	0.002	0.110	0.000	0.000	0.000
Gulf Coast	OK	Atoka	131.168	131.272	0.104	OK005	Bosville fine sandy loam, 5 to 12 percent slopes	0.000	0.104	0.000	0.000	0.002	0.104	0.007	0.000	0.007
Gulf Coast	OK	Atoka	131.272	131.580	0.308	OK005	Claremore-Catoosa complex, 1 to 3 percent slopes	0.000	0.000	0.000	0.000	0.006	0.308	0.000	0.308	0.000
Gulf Coast	OK	Atoka	131.580	131.729	0.149	OK005	Bosville fine sandy loam, 5 to 12 percent slopes	0.000	0.149	0.000	0.000	0.003	0.149	0.010	0.000	0.010
Gulf Coast	OK	Atoka	131.729	131.732	0.003	OK005	Kaufman-Gowton complex, 0 to 1 percent slopes, frequently flooded	0.000	0.000	0.000	0.000	0.000	0.003	0.000	0.000	0.000
Gulf Coast	OK	Atoka	131.732	131.825	0.093	OK005	Bosville fine sandy loam, 5 to 12 percent slopes	0.000	0.093	0.000	0.000	0.002	0.093	0.006	0.000	0.006
Gulf Coast	OK	Atoka	131.825	131.876	0.052	OK005	Bernow fine sandy loam, 3 to 8 percent slopes, gullied	0.000	0.000	0.000	0.000	0.001	0.052	0.004	0.000	0.004
Gulf Coast	OK	Atoka	131.876	131.900	0.024	OK005	Tarrant cobbly clay, 1 to 8 percent slopes	0.000	0.000	0.000	0.000	0.000	0.024	0.022	0.024	0.000
Gulf Coast	OK	Atoka	131.900	131.909	0.009	OK005	Bernow fine sandy loam, 3 to 8 percent slopes, gullied	0.000	0.000	0.000	0.000	0.000	0.009	0.001	0.000	0.001
Gulf	OK	Atoka	131.909	132.019	0.110	OK005	Trinity clay, 0 to 1 percent slopes, occasionally	0.000	0.000	0.000	0.110	0.002	0.110	0.000	0.000	0.000

Appendix K – Soils by Milepost – Gulf Coast Section

Pipeline Segment		County	Beginning Milepost	Ending Milepost	Miles	Soil Series	Soil Series Name	Wind (miles)	water (miles)	Low revegetation potential (miles)	Prime Farmland (miles)	Hydric (miles)	Compaction Prone (miles)	Stony-Rocky (miles)	Shallow Bedrock (miles)	Droughty (miles)
Coast							flooded									
Gulf Coast	OK	Atoka	132.019	132.062	0.042	OK005	Kaufman-Gowton complex, 0 to 1 percent slopes, frequently flooded	0.000	0.000	0.000	0.000	0.001	0.042	0.000	0.000	0.000
Gulf Coast	OK	Atoka	132.062	132.062	0.001	OK005	Trinity clay, 0 to 1 percent slopes, occasionally flooded	0.000	0.000	0.000	0.001	0.000	0.001	0.000	0.000	0.000
Gulf Coast	OK	Atoka	132.062	132.160	0.098	OK005	Tarrant cobbly clay, 1 to 8 percent slopes	0.000	0.000	0.000	0.000	0.002	0.098	0.088	0.098	0.000
Gulf Coast	OK	Atoka	132.160	132.248	0.088	OK005	Heiden clay, 3 to 5 percent slopes	0.000	0.000	0.009	0.088	0.002	0.088	0.000	0.000	0.000
Gulf Coast	OK	Atoka	132.248	132.274	0.026	OK005	Tarrant cobbly clay, 1 to 8 percent slopes	0.000	0.000	0.000	0.000	0.001	0.026	0.023	0.026	0.000
Gulf Coast	OK	Bryan	132.274	132.304	0.030	OK013	Tarrant cobbly silty clay, 1 to 8 percent slopes	0.000	0.000	0.000	0.000	0.001	0.030	0.029	0.030	0.000
Gulf Coast	OK	Bryan	132.304	132.413	0.109	OK013	Trinity clay, 0 to 1 percent slopes, occasionally flooded	0.000	0.000	0.000	0.109	0.002	0.109	0.000	0.000	0.000
Gulf Coast	OK	Bryan	132.413	132.519	0.107	OK013	Ferris-Tarrant complex, 8 to 20 percent slopes	0.000	0.096	0.000	0.000	0.002	0.107	0.053	0.053	0.000
Gulf Coast	OK	Bryan	132.519	132.655	0.136	OK013	Heiden stony clay, 3 to 5 percent slopes	0.000	0.000	0.007	0.000	0.003	0.136	0.122	0.014	0.000
Gulf Coast	OK	Bryan	132.655	132.977	0.323	OK013	Burleson clay, 3 to 5 percent slopes	0.000	0.000	0.274	0.323	0.006	0.323	0.000	0.000	0.000
Gulf Coast	OK	Bryan	132.977	133.771	0.793	OK013	Heiden stony clay, 3 to 5 percent slopes	0.000	0.000	0.040	0.000	0.016	0.793	0.714	0.079	0.000
Gulf Coast	OK	Bryan	133.771	133.813	0.042	OK013	Ferris-Tarrant complex, 8 to 20 percent slopes	0.000	0.038	0.000	0.000	0.001	0.042	0.021	0.021	0.000
Gulf Coast	OK	Bryan	133.813	133.877	0.064	OK013	Trinity clay, 0 to 1 percent slopes, occasionally flooded	0.000	0.000	0.000	0.064	0.001	0.064	0.000	0.000	0.000
Gulf Coast	OK	Bryan	133.877	133.937	0.060	OK013	Ferris-Tarrant complex, 8 to 20 percent slopes	0.000	0.054	0.000	0.000	0.001	0.060	0.030	0.030	0.000
Gulf Coast	OK	Bryan	133.937	134.168	0.231	OK013	Heiden stony clay, 3 to 5 percent slopes	0.000	0.000	0.012	0.000	0.005	0.231	0.208	0.023	0.000
Gulf Coast	OK	Bryan	134.168	134.255	0.088	OK013	Burleson clay, 1 to 3 percent slopes	0.000	0.000	0.088	0.088	0.002	0.088	0.000	0.000	0.000
Gulf Coast	OK	Bryan	134.255	134.451	0.196	OK013	Ferris clay, 1 to 5 percent slopes, eroded	0.000	0.000	0.010	0.000	0.004	0.196	0.020	0.020	0.000
Gulf Coast	OK	Bryan	134.451	134.468	0.017	OK013	Ferris-Tarrant complex, 8 to 20 percent slopes	0.000	0.015	0.000	0.000	0.000	0.017	0.008	0.008	0.000
Gulf Coast	OK	Bryan	134.468	134.519	0.051	OK013	Ferris clay, 1 to 5 percent slopes, eroded	0.000	0.000	0.003	0.000	0.001	0.051	0.005	0.005	0.000
Gulf Coast	OK	Bryan	134.519	134.566	0.047	OK013	Ferris-Tarrant complex, 8 to 20 percent slopes	0.000	0.042	0.000	0.000	0.001	0.047	0.023	0.023	0.000
Gulf Coast	OK	Bryan	134.566	134.594	0.028	OK013	Trinity clay, 0 to 1 percent slopes, occasionally flooded	0.000	0.000	0.000	0.028	0.001	0.028	0.000	0.000	0.000
Gulf	OK	Bryan	134.594	134.621	0.028	OK013	Ferris-Tarrant complex, 8 to 20 percent slopes	0.000	0.025	0.000	0.000	0.001	0.028	0.014	0.014	0.000

Appendix K – Soils by Milepost – Gulf Coast Section

Pipeline Segment		County	Beginning Milepost	Ending Milepost	Miles	Soil Series	Soil Series Name	Wind (miles)	water (miles)	Low revegetation potential (miles)	Prime Farmland (miles)	Hydric (miles)	Compaction Prone (miles)	Stony-Rocky (miles)	Shallow Bedrock (miles)	Droughty (miles)
Coast																
Gulf Coast	OK	Bryan	134.621	134.725	0.103	OK013	San Saba-Tarrant complex, 1 to 8 percent slopes	0.000	0.000	0.000	0.000	0.002	0.103	0.041	0.103	0.000
Gulf Coast	OK	Bryan	134.725	134.811	0.087	OK013	Ferris clay, 1 to 5 percent slopes, eroded	0.000	0.000	0.004	0.000	0.002	0.087	0.009	0.009	0.000
Gulf Coast	OK	Bryan	134.811	135.118	0.307	OK013	Burleson clay, 1 to 3 percent slopes	0.000	0.000	0.307	0.307	0.006	0.307	0.000	0.000	0.000
Gulf Coast	OK	Bryan	135.118	135.713	0.594	OK013	Ferris clay, 1 to 5 percent slopes, eroded	0.000	0.000	0.030	0.000	0.012	0.594	0.059	0.059	0.000
Gulf Coast	OK	Bryan	135.713	135.754	0.041	OK013	Ferris-Tarrant complex, 8 to 20 percent slopes	0.000	0.037	0.000	0.000	0.001	0.041	0.021	0.021	0.000
Gulf Coast	OK	Bryan	135.754	135.843	0.090	OK013	Ferris clay, 1 to 5 percent slopes, eroded	0.000	0.000	0.004	0.000	0.002	0.090	0.009	0.009	0.000
Gulf Coast	OK	Bryan	135.843	136.192	0.349	OK013	Ferris-Tarrant complex, 8 to 20 percent slopes	0.000	0.314	0.000	0.000	0.007	0.349	0.175	0.175	0.000
Gulf Coast	OK	Bryan	136.192	136.249	0.057	OK013	Frioton silty clay loam, 0 to 1 percent slopes, occasionally flooded	0.000	0.000	0.000	0.057	0.001	0.057	0.000	0.000	0.000
Gulf Coast	OK	Bryan	136.249	136.341	0.092	OK013	Ferris-Tarrant complex, 8 to 20 percent slopes	0.000	0.083	0.000	0.000	0.002	0.092	0.046	0.046	0.000
Gulf Coast	OK	Bryan	136.341	136.567	0.226	OK013	Tarrant cobbly silty clay, 1 to 8 percent slopes	0.000	0.000	0.000	0.000	0.005	0.226	0.215	0.226	0.000
Gulf Coast	OK	Bryan	136.567	136.687	0.120	OK013	Burleson clay, 1 to 3 percent slopes	0.000	0.000	0.120	0.120	0.002	0.120	0.000	0.000	0.000
Gulf Coast	OK	Bryan	136.687	136.725	0.038	OK013	Ferris-Tarrant complex, 8 to 20 percent slopes	0.000	0.034	0.000	0.000	0.001	0.038	0.019	0.019	0.000
Gulf Coast	OK	Bryan	136.725	136.813	0.088	OK013	Ferris clay, 1 to 5 percent slopes, eroded	0.000	0.000	0.004	0.000	0.002	0.088	0.009	0.009	0.000
Gulf Coast	OK	Bryan	136.813	137.163	0.350	OK013	Ferris-Tarrant complex, 8 to 20 percent slopes	0.000	0.315	0.000	0.000	0.007	0.350	0.175	0.175	0.000
Gulf Coast	OK	Bryan	137.163	137.245	0.082	OK013	Heiden clay, 3 to 5 percent slopes	0.000	0.000	0.004	0.082	0.002	0.082	0.000	0.004	0.000
Gulf Coast	OK	Bryan	137.245	137.358	0.113	OK013	Frioton silty clay loam, 0 to 1 percent slopes, occasionally flooded	0.000	0.000	0.000	0.113	0.002	0.113	0.000	0.000	0.000
Gulf Coast	OK	Bryan	137.358	137.541	0.183	OK013	Ferris-Tarrant complex, 8 to 20 percent slopes	0.000	0.165	0.000	0.000	0.004	0.183	0.092	0.092	0.000
Gulf Coast	OK	Bryan	137.541	137.667	0.126	OK013	San Saba-Tarrant complex, 1 to 8 percent slopes	0.000	0.000	0.000	0.000	0.003	0.126	0.050	0.126	0.000
Gulf Coast	OK	Bryan	137.667	137.837	0.170	OK013	Woodson silt loam, 0 to 1 percent slopes	0.000	0.000	0.000	0.000	0.003	0.170	0.000	0.000	0.000
Gulf Coast	OK	Bryan	137.837	137.974	0.137	OK013	Durant loam, 3 to 5 percent slopes	0.000	0.000	0.000	0.137	0.003	0.137	0.000	0.000	0.000
Gulf Coast	OK	Bryan	137.974	138.120	0.146	OK013	Ferris-Tarrant complex, 8 to 20 percent slopes	0.000	0.131	0.000	0.000	0.003	0.146	0.073	0.073	0.000
Gulf	OK	Bryan	138.120	138.273	0.153	OK013	Durant loam, 3 to 5 percent slopes	0.000	0.000	0.000	0.153	0.003	0.153	0.000	0.000	0.000

Appendix K – Soils by Milepost – Gulf Coast Section

Pipeline Segment		County	Beginning Milepost	Ending Milepost	Miles	Soil Series	Soil Series Name	Wind (miles)	water (miles)	Low revegetation potential (miles)	Prime Farmland (miles)	Hydric (miles)	Compaction Prone (miles)	Stony-Rocky (miles)	Shallow Bedrock (miles)	Droughty (miles)
Coast																
Gulf Coast	OK	Bryan	138.273	138.595	0.323	OK013	Ferris-Tarrant complex, 8 to 20 percent slopes	0.000	0.291	0.000	0.000	0.006	0.323	0.162	0.162	0.000
Gulf Coast	OK	Bryan	138.595	138.770	0.175	OK013	Durant loam, 3 to 5 percent slopes	0.000	0.000	0.000	0.175	0.003	0.175	0.000	0.000	0.000
Gulf Coast	OK	Bryan	138.770	138.814	0.044	OK013	Frioton silty clay loam, 0 to 1 percent slopes, occasionally flooded	0.000	0.000	0.000	0.044	0.001	0.044	0.000	0.000	0.000
Gulf Coast	OK	Bryan	138.814	138.874	0.060	OK013	Ferris-Tarrant complex, 8 to 20 percent slopes	0.000	0.054	0.000	0.000	0.001	0.060	0.030	0.030	0.000
Gulf Coast	OK	Bryan	138.874	139.141	0.268	OK013	Dennis loam, 1 to 3 percent slopes	0.000	0.000	0.000	0.268	0.005	0.268	0.000	0.000	0.000
Gulf Coast	OK	Bryan	139.141	139.203	0.062	OK013	Ferris-Tarrant complex, 8 to 20 percent slopes	0.000	0.055	0.000	0.000	0.001	0.062	0.031	0.031	0.000
Gulf Coast	OK	Bryan	139.203	139.293	0.090	OK013	Dennis loam, 1 to 3 percent slopes	0.000	0.000	0.000	0.090	0.002	0.090	0.000	0.000	0.000
Gulf Coast	OK	Bryan	139.293	139.345	0.052	OK013	Bernow fine sandy loam, 3 to 5 percent slopes	0.000	0.000	0.000	0.052	0.001	0.052	0.000	0.000	0.000
Gulf Coast	OK	Bryan	139.345	139.479	0.134	OK013	Bernow-Romia complex, 8 to 20 percent slopes	0.160	0.134	0.000	0.000	0.003	0.134	0.040	0.000	0.120
Gulf Coast	OK	Bryan	139.479	139.530	0.051	OK013	Bernow-Romia complex, 3 to 8 percent slopes	0.049	0.000	0.000	0.051	0.001	0.051	0.018	0.000	0.049
Gulf Coast	OK	Bryan	139.530	139.641	0.111	OK013	Larue loamy fine sand, 0 to 3 percent slopes	0.094	0.000	0.000	0.000	0.002	0.111	0.000	0.000	0.094
Gulf Coast	OK	Bryan	139.641	139.783	0.142	OK013	Bernow fine sandy loam, 3 to 5 percent slopes	0.000	0.000	0.000	0.142	0.003	0.142	0.000	0.000	0.000
Gulf Coast	OK	Bryan	139.783	139.830	0.047	OK013	Gowton loam, 0 to 1 percent slopes, occasionally flooded	0.000	0.000	0.000	0.047	0.001	0.047	0.000	0.000	0.000
Gulf Coast	OK	Bryan	139.830	139.917	0.088	OK013	Bernow fine sandy loam, 3 to 5 percent slopes	0.000	0.000	0.000	0.088	0.002	0.088	0.000	0.000	0.000
Gulf Coast	OK	Bryan	139.917	140.062	0.144	OK013	Bernow fine sandy loam, 1 to 3 percent slopes	0.000	0.000	0.000	0.144	0.003	0.144	0.000	0.000	0.000
Gulf Coast	OK	Bryan	140.062	140.187	0.125	OK013	Larue loamy fine sand, 0 to 3 percent slopes	0.106	0.000	0.000	0.000	0.003	0.125	0.000	0.000	0.106
Gulf Coast	OK	Bryan	140.187	140.309	0.122	OK013	Bernow fine sandy loam, 3 to 5 percent slopes	0.000	0.000	0.000	0.122	0.002	0.122	0.000	0.000	0.000
Gulf Coast	OK	Bryan	140.309	140.367	0.058	OK013	Bosville fine sandy loam, 5 to 8 percent slopes	0.003	0.000	0.000	0.000	0.001	0.058	0.003	0.000	0.003
Gulf Coast	OK	Bryan	140.367	140.409	0.042	OK013	Boggy fine sandy loam, 0 to 1 percent slopes, frequently flooded	0.000	0.000	0.000	0.000	0.001	0.042	0.000	0.000	0.000
Gulf Coast	OK	Bryan	140.409	140.516	0.107	OK013	Bernow-Bosville complex, 3 to 5 percent slopes, eroded	0.000	0.000	0.000	0.000	0.002	0.107	0.000	0.000	0.000
Gulf Coast	OK	Bryan	140.516	140.585	0.069	OK013	Bernow fine sandy loam, 1 to 3 percent slopes	0.000	0.000	0.000	0.069	0.001	0.069	0.000	0.000	0.000
Gulf	OK	Bryan	140.585	140.888	0.303	OK013	Bernow fine sandy loam, 3 to 8 percent slopes,	0.000	0.000	0.000	0.000	0.006	0.303	0.000	0.000	0.000

Appendix K – Soils by Milepost – Gulf Coast Section

Pipeline Segment		County	Beginning Milepost	Ending Milepost	Miles	Soil Series	Soil Series Name	Wind (miles)	water (miles)	Low revegetation potential (miles)	Prime Farmland (miles)	Hydric (miles)	Compaction Prone (miles)	Stony-Rocky (miles)	Shallow Bedrock (miles)	Droughty (miles)
Coast							severely eroded									
Gulf Coast	OK	Bryan	140.888	140.936	0.048	OK013	Bernow fine sandy loam, 3 to 5 percent slopes	0.000	0.000	0.000	0.048	0.001	0.048	0.000	0.000	0.000
Gulf Coast	OK	Bryan	140.936	141.017	0.081	OK013	Bernow fine sandy loam, 3 to 8 percent slopes, severely eroded	0.000	0.000	0.000	0.000	0.002	0.081	0.000	0.000	0.000
Gulf Coast	OK	Bryan	141.017	141.134	0.118	OK013	Bernow fine sandy loam, 3 to 5 percent slopes	0.000	0.000	0.000	0.118	0.002	0.118	0.000	0.000	0.000
Gulf Coast	OK	Bryan	141.134	141.256	0.122	OK013	Bernow fine sandy loam, 5 to 8 percent slopes	0.000	0.000	0.000	0.122	0.002	0.122	0.000	0.000	0.000
Gulf Coast	OK	Bryan	141.256	141.422	0.165	OK013	Bernow fine sandy loam, 3 to 5 percent slopes	0.000	0.000	0.000	0.165	0.003	0.165	0.000	0.000	0.000
Gulf Coast	OK	Bryan	141.422	141.729	0.308	OK013	Dennis loam, 1 to 3 percent slopes	0.000	0.000	0.000	0.308	0.006	0.308	0.000	0.000	0.000
Gulf Coast	OK	Bryan	141.729	142.062	0.333	OK013	Ferris-Tarrant complex, 8 to 20 percent slopes	0.000	0.300	0.000	0.000	0.007	0.333	0.166	0.166	0.000
Gulf Coast	OK	Bryan	142.062	142.104	0.042	OK013	Dennis loam, 3 to 5 percent slopes	0.000	0.000	0.000	0.042	0.001	0.042	0.000	0.000	0.000
Gulf Coast	OK	Bryan	142.104	142.191	0.087	OK013	Ferris-Tarrant complex, 8 to 20 percent slopes	0.000	0.079	0.000	0.000	0.002	0.087	0.044	0.044	0.000
Gulf Coast	OK	Bryan	142.191	142.252	0.061	OK013	Dennis loam, 3 to 5 percent slopes	0.000	0.000	0.000	0.061	0.001	0.061	0.000	0.000	0.000
Gulf Coast	OK	Bryan	142.252	142.507	0.255	OK013	Durant loam, 1 to 3 percent slopes	0.000	0.000	0.026	0.255	0.005	0.255	0.000	0.000	0.000
Gulf Coast	OK	Bryan	142.507	142.524	0.017	OK013	Durant-Verdigris complex, 0 to 5 percent slopes	0.000	0.000	0.001	0.017	0.000	0.017	0.000	0.000	0.000
Gulf Coast	OK	Bryan	142.524	142.541	0.017	OK013	Dennis loam, 1 to 3 percent slopes	0.000	0.000	0.000	0.017	0.000	0.017	0.000	0.000	0.000
Gulf Coast	OK	Bryan	142.541	142.591	0.050	OK013	Fitzhugh-Bates complex, 1 to 5 percent slopes, eroded	0.000	0.000	0.000	0.000	0.001	0.050	0.000	0.000	0.000
Gulf Coast	OK	Bryan	142.591	142.674	0.083	OK013	Dennis loam, 1 to 3 percent slopes	0.000	0.000	0.000	0.083	0.002	0.083	0.000	0.000	0.000
Gulf Coast	OK	Bryan	142.674	142.893	0.219	OK013	Fitzhugh-Bates complex, 1 to 5 percent slopes, eroded	0.000	0.000	0.000	0.000	0.004	0.219	0.000	0.000	0.000
Gulf Coast	OK	Bryan	142.893	143.020	0.127	OK013	Dennis loam, 1 to 3 percent slopes	0.000	0.000	0.000	0.127	0.003	0.127	0.000	0.000	0.000
Gulf Coast	OK	Bryan	143.020	143.129	0.109	OK013	Dennis loam, 3 to 5 percent slopes	0.000	0.000	0.000	0.109	0.002	0.109	0.000	0.000	0.000
Gulf Coast	OK	Bryan	143.129	143.234	0.104	OK013	Ferris-Tarrant complex, 8 to 20 percent slopes	0.000	0.094	0.000	0.000	0.002	0.104	0.052	0.052	0.000
Gulf Coast	OK	Bryan	143.234	143.330	0.097	OK013	Bates fine sandy loam, 1 to 3 percent slopes	0.000	0.000	0.000	0.097	0.002	0.097	0.000	0.000	0.000
Gulf Coast	OK	Bryan	143.330	143.398	0.068	OK013	Dennis loam, 3 to 5 percent slopes	0.000	0.000	0.000	0.068	0.001	0.068	0.000	0.000	0.000
Gulf	OK	Bryan	143.398	143.480	0.081	OK013	Ferris-Tarrant complex, 8 to 20 percent slopes	0.000	0.073	0.000	0.000	0.002	0.081	0.041	0.041	0.000

Appendix K – Soils by Milepost – Gulf Coast Section

Pipeline Segment		County	Beginning Milepost	Ending Milepost	Miles	Soil Series	Soil Series Name	Wind (miles)	water (miles)	Low revegetation potential (miles)	Prime Farmland (miles)	Hydric (miles)	Compaction Prone (miles)	Stony-Rocky (miles)	Shallow Bedrock (miles)	Droughty (miles)
Coast																
Gulf Coast	OK	Bryan	143.480	143.557	0.077	OK013	Matoy silty clay loam, 1 to 3 percent slopes	0.000	0.000	0.000	0.077	0.002	0.077	0.070	0.074	0.000
Gulf Coast	OK	Bryan	143.557	143.647	0.090	OK013	Dennis loam, 1 to 3 percent slopes	0.000	0.000	0.000	0.090	0.002	0.090	0.000	0.000	0.000
Gulf Coast	OK	Bryan	143.647	143.861	0.214	OK013	Heiden clay, 3 to 5 percent slopes	0.000	0.000	0.011	0.214	0.004	0.214	0.000	0.011	0.000
Gulf Coast	OK	Bryan	143.861	143.955	0.094	OK013	Dennis loam, 1 to 3 percent slopes	0.000	0.000	0.000	0.094	0.002	0.094	0.000	0.000	0.000
Gulf Coast	OK	Bryan	143.955	144.044	0.088	OK013	Bosville fine sandy loam, 3 to 5 percent slopes	0.000	0.000	0.000	0.088	0.002	0.088	0.000	0.000	0.000
Gulf Coast	OK	Bryan	144.044	144.065	0.022	OK013	Bernow fine sandy loam, 8 to 12 percent slopes	0.000	0.022	0.000	0.000	0.000	0.022	0.002	0.000	0.002
Gulf Coast	OK	Bryan	144.065	144.162	0.096	OK013	Bosville fine sandy loam, 3 to 5 percent slopes	0.000	0.000	0.000	0.096	0.002	0.096	0.000	0.000	0.000
Gulf Coast	OK	Bryan	144.162	144.219	0.058	OK013	Bernow-Romia complex, 3 to 8 percent slopes	0.055	0.000	0.000	0.058	0.001	0.058	0.020	0.000	0.055
Gulf Coast	OK	Bryan	144.219	144.291	0.072	OK013	Bernow fine sandy loam, 1 to 3 percent slopes	0.000	0.000	0.000	0.072	0.001	0.072	0.000	0.000	0.000
Gulf Coast	OK	Bryan	144.291	144.379	0.088	OK013	Bernow fine sandy loam, 3 to 5 percent slopes	0.000	0.000	0.000	0.088	0.002	0.088	0.000	0.000	0.000
Gulf Coast	OK	Bryan	144.379	144.436	0.057	OK013	Bernow fine sandy loam, 1 to 3 percent slopes	0.000	0.000	0.000	0.057	0.001	0.057	0.000	0.000	0.000
Gulf Coast	OK	Bryan	144.436	144.471	0.035	OK013	Bernow fine sandy loam, 3 to 5 percent slopes	0.000	0.000	0.000	0.035	0.001	0.035	0.000	0.000	0.000
Gulf Coast	OK	Bryan	144.471	144.487	0.017	OK013	Bernow fine sandy loam, 8 to 12 percent slopes	0.000	0.017	0.000	0.000	0.000	0.017	0.002	0.000	0.002
Gulf Coast	OK	Bryan	144.487	144.525	0.038	OK013	Bosville fine sandy loam, 3 to 5 percent slopes	0.000	0.000	0.000	0.038	0.001	0.038	0.000	0.000	0.000
Gulf Coast	OK	Bryan	144.525	144.576	0.051	OK013	Bernow fine sandy loam, 1 to 3 percent slopes	0.000	0.000	0.000	0.051	0.001	0.051	0.000	0.000	0.000
Gulf Coast	OK	Bryan	144.576	144.623	0.047	OK013	Bosville fine sandy loam, 3 to 5 percent slopes	0.000	0.000	0.000	0.047	0.001	0.047	0.000	0.000	0.000
Gulf Coast	OK	Bryan	144.623	144.883	0.260	OK013	Verdigris silty clay loam, 0 to 1 percent slopes, occasionally flooded	0.000	0.000	0.000	0.260	0.005	0.260	0.000	0.000	0.000
Gulf Coast	OK	Bryan	144.883	144.959	0.076	OK013	Gowton loam, 0 to 1 percent slopes, occasionally flooded	0.000	0.000	0.000	0.076	0.002	0.076	0.000	0.000	0.000
Gulf Coast	OK	Bryan	144.959	145.086	0.128	OK013	Bernow fine sandy loam, 8 to 12 percent slopes	0.000	0.128	0.000	0.000	0.003	0.128	0.013	0.000	0.013
Gulf Coast	OK	Bryan	145.086	145.135	0.049	OK013	Bernow-Romia complex, 3 to 8 percent slopes	0.046	0.000	0.000	0.049	0.001	0.049	0.017	0.000	0.046
Gulf Coast	OK	Bryan	145.135	145.221	0.086	OK013	Bernow fine sandy loam, 8 to 12 percent slopes	0.000	0.086	0.000	0.000	0.002	0.086	0.009	0.000	0.009
Gulf	OK	Bryan	145.221	145.287	0.067	OK013	Bernow-Romia complex, 3 to 8 percent slopes	0.063	0.000	0.000	0.067	0.001	0.067	0.023	0.000	0.063

Appendix K – Soils by Milepost – Gulf Coast Section

Pipeline Segment		County	Beginning Milepost	Ending Milepost	Miles	Soil Series	Soil Series Name	Wind (miles)	water (miles)	Low revegetation potential (miles)	Prime Farmland (miles)	Hydric (miles)	Compaction Prone (miles)	Stony-Rocky (miles)	Shallow Bedrock (miles)	Droughty (miles)
Coast																
Gulf Coast	OK	Bryan	145.287	145.315	0.028	OK013	Gowton loam, 0 to 1 percent slopes, occasionally flooded	0.000	0.000	0.000	0.028	0.001	0.028	0.000	0.000	0.000
Gulf Coast	OK	Bryan	145.315	145.382	0.066	OK013	Bernow fine sandy loam, 8 to 12 percent slopes	0.000	0.066	0.000	0.000	0.001	0.066	0.007	0.000	0.007
Gulf Coast	OK	Bryan	145.382	145.452	0.071	OK013	Bernow loamy fine sand, 3 to 8 percent slopes	0.071	0.000	0.000	0.071	0.001	0.071	0.000	0.000	0.071
Gulf Coast	OK	Bryan	145.452	145.701	0.248	OK013	Bernow fine sandy loam, 1 to 3 percent slopes	0.000	0.000	0.000	0.248	0.005	0.248	0.000	0.000	0.000
Gulf Coast	OK	Bryan	145.701	145.744	0.043	OK013	Freestone fine sandy loam, 1 to 5 percent slopes	0.000	0.000	0.000	0.043	0.001	0.043	0.000	0.000	0.000
Gulf Coast	OK	Bryan	145.744	145.858	0.115	OK013	Parsons silt loam, 0 to 1 percent slopes	0.000	0.000	0.000	0.115	0.002	0.115	0.000	0.000	0.000
Gulf Coast	OK	Bryan	145.858	145.909	0.051	OK013	Muskogee silt loam, 1 to 3 percent slopes	0.000	0.000	0.000	0.051	0.001	0.051	0.000	0.000	0.000
Gulf Coast	OK	Bryan	145.909	145.986	0.077	OK013	Water	0.000	0.000	0.000	0.000	0.002	0.077	0.000	0.000	0.000
Gulf Coast	OK	Bryan	145.986	146.107	0.121	OK013	Muskogee silt loam, 1 to 3 percent slopes	0.000	0.000	0.000	0.121	0.002	0.121	0.000	0.000	0.000
Gulf Coast	OK	Bryan	146.107	146.128	0.021	OK013	Bernow fine sandy loam, 3 to 5 percent slopes	0.000	0.000	0.000	0.021	0.000	0.021	0.000	0.000	0.000
Gulf Coast	OK	Bryan	146.128	146.138	0.010	OK013	Muskogee silt loam, 1 to 3 percent slopes	0.000	0.000	0.000	0.010	0.000	0.010	0.000	0.000	0.000
Gulf Coast	OK	Bryan	146.138	146.322	0.185	OK013	Muskogee silt loam, 0 to 1 percent slopes	0.000	0.000	0.000	0.185	0.004	0.185	0.000	0.000	0.000
Gulf Coast	OK	Bryan	146.322	146.329	0.007	OK013	Muskogee silt loam, 1 to 3 percent slopes	0.000	0.000	0.000	0.007	0.000	0.007	0.000	0.000	0.000
Gulf Coast	OK	Bryan	146.329	146.355	0.026	OK013	Muskogee silt loam, 0 to 1 percent slopes	0.000	0.000	0.000	0.026	0.001	0.026	0.000	0.000	0.000
Gulf Coast	OK	Bryan	146.355	146.544	0.189	OK013	Muskogee silt loam, 1 to 3 percent slopes	0.000	0.000	0.000	0.189	0.004	0.189	0.000	0.000	0.000
Gulf Coast	OK	Bryan	146.544	146.615	0.071	OK013	Bernow fine sandy loam, 3 to 5 percent slopes	0.000	0.000	0.000	0.071	0.001	0.071	0.000	0.000	0.000
Gulf Coast	OK	Bryan	146.615	146.652	0.037	OK013	Durant-Verdigris complex, 0 to 5 percent slopes	0.000	0.000	0.001	0.037	0.001	0.037	0.000	0.000	0.000
Gulf Coast	OK	Bryan	146.652	146.690	0.038	OK013	Durant loam, 1 to 3 percent slopes	0.000	0.000	0.004	0.038	0.001	0.038	0.000	0.000	0.000
Gulf Coast	OK	Bryan	146.690	146.715	0.026	OK013	Durant-Verdigris complex, 0 to 5 percent slopes	0.000	0.000	0.001	0.026	0.001	0.026	0.000	0.000	0.000
Gulf Coast	OK	Bryan	146.715	146.731	0.016	OK013	Durant loam, 1 to 3 percent slopes	0.000	0.000	0.002	0.016	0.000	0.016	0.000	0.000	0.000
Gulf Coast	OK	Bryan	146.731	146.812	0.081	OK013	Dennis loam, 1 to 3 percent slopes	0.000	0.000	0.000	0.081	0.002	0.081	0.000	0.000	0.000
Gulf	OK	Bryan	146.812	146.896	0.084	OK013	Durant-Verdigris complex, 0 to 5 percent slopes	0.000	0.000	0.003	0.084	0.002	0.084	0.000	0.000	0.000

Appendix K – Soils by Milepost – Gulf Coast Section

Pipeline Segment		County	Beginning Milepost	Ending Milepost	Miles	Soil Series	Soil Series Name	Wind (miles)	water (miles)	Low revegetation potential (miles)	Prime Farmland (miles)	Hydric (miles)	Compaction Prone (miles)	Stony-Rocky (miles)	Shallow Bedrock (miles)	Droughty (miles)
Coast																
Gulf Coast	OK	Bryan	146.896	147.207	0.311	OK013	Dennis loam, 1 to 3 percent slopes	0.000	0.000	0.000	0.311	0.006	0.311	0.000	0.000	0.000
Gulf Coast	OK	Bryan	147.207	147.246	0.039	OK013	Fitzhugh-Bates complex, 1 to 5 percent slopes, eroded	0.000	0.000	0.000	0.000	0.001	0.039	0.000	0.000	0.000
Gulf Coast	OK	Bryan	147.246	147.268	0.023	OK013	Dennis loam, 1 to 3 percent slopes	0.000	0.000	0.000	0.023	0.000	0.023	0.000	0.000	0.000
Gulf Coast	OK	Bryan	147.268	147.320	0.051	OK013	Fitzhugh-Bates complex, 1 to 5 percent slopes, eroded	0.000	0.000	0.000	0.000	0.001	0.051	0.000	0.000	0.000
Gulf Coast	OK	Bryan	147.320	147.528	0.208	OK013	Dennis loam, 1 to 3 percent slopes	0.000	0.000	0.000	0.208	0.004	0.208	0.000	0.000	0.000
Gulf Coast	OK	Bryan	147.528	147.619	0.091	OK013	Durant-Verdigris complex, 0 to 5 percent slopes	0.000	0.000	0.003	0.091	0.002	0.091	0.000	0.000	0.000
Gulf Coast	OK	Bryan	147.619	147.680	0.061	OK013	Dennis loam, 1 to 3 percent slopes	0.000	0.000	0.000	0.061	0.001	0.061	0.000	0.000	0.000
Gulf Coast	OK	Bryan	147.680	147.744	0.064	OK013	Durant-Verdigris complex, 0 to 5 percent slopes	0.000	0.000	0.002	0.064	0.001	0.064	0.000	0.000	0.000
Gulf Coast	OK	Bryan	147.744	147.767	0.023	OK013	Dennis loam, 1 to 3 percent slopes	0.000	0.000	0.000	0.023	0.000	0.023	0.000	0.000	0.000
Gulf Coast	OK	Bryan	147.767	147.920	0.154	OK013	Fitzhugh-Bates complex, 1 to 5 percent slopes, eroded	0.000	0.000	0.000	0.000	0.003	0.154	0.000	0.000	0.000
Gulf Coast	OK	Bryan	147.920	148.163	0.242	OK013	Dennis loam, 1 to 3 percent slopes	0.000	0.000	0.000	0.242	0.005	0.242	0.000	0.000	0.000
Gulf Coast	OK	Bryan	148.163	148.206	0.044	OK013	Dennis loam, 3 to 5 percent slopes	0.000	0.000	0.000	0.044	0.001	0.044	0.000	0.000	0.000
Gulf Coast	OK	Bryan	148.206	148.277	0.071	OK013	Durant-Verdigris complex, 0 to 5 percent slopes	0.000	0.000	0.002	0.071	0.001	0.071	0.000	0.000	0.000
Gulf Coast	OK	Bryan	148.277	148.373	0.096	OK013	Durant loam, 1 to 3 percent slopes	0.000	0.000	0.010	0.096	0.002	0.096	0.000	0.000	0.000
Gulf Coast	OK	Bryan	148.373	148.755	0.382	OK013	Dennis loam, 1 to 3 percent slopes	0.000	0.000	0.000	0.382	0.008	0.382	0.000	0.000	0.000
Gulf Coast	OK	Bryan	148.755	148.776	0.021	OK013	Crockett loam, 1 to 5 percent slopes, severely eroded	0.000	0.000	0.019	0.000	0.000	0.021	0.000	0.000	0.000
Gulf Coast	OK	Bryan	148.776	148.835	0.059	OK013	Durant-Verdigris complex, 0 to 5 percent slopes	0.000	0.000	0.002	0.059	0.001	0.059	0.000	0.000	0.000
Gulf Coast	OK	Bryan	148.835	149.100	0.266	OK013	Dennis loam, 3 to 5 percent slopes	0.000	0.000	0.000	0.266	0.005	0.266	0.000	0.000	0.000
Gulf Coast	OK	Bryan	149.100	149.198	0.098	OK013	Fitzhugh-Bates complex, 1 to 5 percent slopes, eroded	0.000	0.000	0.000	0.000	0.002	0.098	0.000	0.000	0.000
Gulf Coast	OK	Bryan	149.198	149.276	0.078	OK013	Dennis loam, 1 to 3 percent slopes	0.000	0.000	0.000	0.078	0.002	0.078	0.000	0.000	0.000
Gulf Coast	OK	Bryan	149.276	149.316	0.040	OK013	Fitzhugh-Bates complex, 1 to 5 percent slopes, eroded	0.000	0.000	0.000	0.000	0.001	0.040	0.000	0.000	0.000
Gulf	OK	Bryan	149.316	149.360	0.043	OK013	Dennis loam, 1 to 3 percent slopes	0.000	0.000	0.000	0.043	0.001	0.043	0.000	0.000	0.000

Appendix K – Soils by Milepost – Gulf Coast Section

Pipeline Segment		County	Beginning Milepost	Ending Milepost	Miles	Soil Series	Soil Series Name	Wind (miles)	water (miles)	Low revegetation potential (miles)	Prime Farmland (miles)	Hydric (miles)	Compaction Prone (miles)	Stony-Rocky (miles)	Shallow Bedrock (miles)	Droughty (miles)
Coast																
Gulf Coast	OK	Bryan	149.360	149.408	0.048	OK013	Dennis loam, 3 to 5 percent slopes	0.000	0.000	0.000	0.048	0.001	0.048	0.000	0.000	0.000
Gulf Coast	OK	Bryan	149.408	149.639	0.232	OK013	Dennis loam, 1 to 3 percent slopes	0.000	0.000	0.000	0.232	0.005	0.232	0.000	0.000	0.000
Gulf Coast	OK	Bryan	149.639	149.687	0.048	OK013	Dennis loam, 3 to 5 percent slopes	0.000	0.000	0.000	0.048	0.001	0.048	0.000	0.000	0.000
Gulf Coast	OK	Bryan	149.687	149.793	0.106	OK013	Dennis loam, 1 to 3 percent slopes	0.000	0.000	0.000	0.106	0.002	0.106	0.000	0.000	0.000
Gulf Coast	OK	Bryan	149.793	149.829	0.036	OK013	Dennis loam, 3 to 5 percent slopes	0.000	0.000	0.000	0.036	0.001	0.036	0.000	0.000	0.000
Gulf Coast	OK	Bryan	149.829	149.932	0.103	OK013	Dennis loam, 1 to 3 percent slopes	0.000	0.000	0.000	0.103	0.002	0.103	0.000	0.000	0.000
Gulf Coast	OK	Bryan	149.932	150.034	0.102	OK013	Fitzhugh-Bates complex, 1 to 5 percent slopes, eroded	0.000	0.000	0.000	0.000	0.002	0.102	0.000	0.000	0.000
Gulf Coast	OK	Bryan	150.034	150.193	0.159	OK013	Durant loam, 1 to 3 percent slopes	0.000	0.000	0.016	0.159	0.003	0.159	0.000	0.000	0.000
Gulf Coast	OK	Bryan	150.193	150.334	0.142	OK013	Crockett-Durant complex, 1 to 5 percent slopes, eroded	0.000	0.000	0.092	0.000	0.003	0.142	0.000	0.000	0.000
Gulf Coast	OK	Bryan	150.334	150.357	0.023	OK013	Durant-Verdigris complex, 0 to 5 percent slopes	0.000	0.000	0.001	0.023	0.000	0.023	0.000	0.000	0.000
Gulf Coast	OK	Bryan	150.357	150.505	0.147	OK013	Durant loam, 1 to 3 percent slopes	0.000	0.000	0.015	0.147	0.003	0.147	0.000	0.000	0.000
Gulf Coast	OK	Bryan	150.505	150.539	0.035	OK013	Durant-Verdigris complex, 0 to 5 percent slopes	0.000	0.000	0.001	0.035	0.001	0.035	0.000	0.000	0.000
Gulf Coast	OK	Bryan	150.539	150.569	0.029	OK013	Durant loam, 1 to 3 percent slopes	0.000	0.000	0.003	0.029	0.001	0.029	0.000	0.000	0.000
Gulf Coast	OK	Bryan	150.569	150.831	0.262	OK013	Dennis loam, 1 to 3 percent slopes	0.000	0.000	0.000	0.262	0.005	0.262	0.000	0.000	0.000
Gulf Coast	OK	Bryan	150.831	151.152	0.321	OK013	Dennis loam, 3 to 5 percent slopes	0.000	0.000	0.000	0.321	0.006	0.321	0.000	0.000	0.000
Gulf Coast	OK	Bryan	151.152	151.221	0.069	OK013	Dennis loam, 1 to 3 percent slopes	0.000	0.000	0.000	0.069	0.001	0.069	0.000	0.000	0.000
Gulf Coast	OK	Bryan	151.221	151.247	0.026	OK013	Dennis loam, 3 to 5 percent slopes	0.000	0.000	0.000	0.026	0.001	0.026	0.000	0.000	0.000
Gulf Coast	OK	Bryan	151.247	151.290	0.043	OK013	Dennis loam, 1 to 3 percent slopes	0.000	0.000	0.000	0.043	0.001	0.043	0.000	0.000	0.000
Gulf Coast	OK	Bryan	151.290	151.402	0.112	OK013	Crockett-Durant complex, 1 to 5 percent slopes, eroded	0.000	0.000	0.073	0.000	0.002	0.112	0.000	0.000	0.000
Gulf Coast	OK	Bryan	151.402	151.429	0.027	OK013	Crockett loam, 1 to 5 percent slopes, severely eroded	0.000	0.000	0.024	0.000	0.001	0.027	0.000	0.000	0.000
Gulf Coast	OK	Bryan	151.429	151.509	0.080	OK013	Crockett-Durant complex, 1 to 5 percent slopes, eroded	0.000	0.000	0.052	0.000	0.002	0.080	0.000	0.000	0.000
Gulf	OK	Bryan	151.509	151.620	0.112	OK013	Durant loam, 1 to 3 percent slopes	0.000	0.000	0.011	0.112	0.002	0.112	0.000	0.000	0.000

Appendix K – Soils by Milepost – Gulf Coast Section

Pipeline Segment		County	Beginning Milepost	Ending Milepost	Miles	Soil Series	Soil Series Name	Wind (miles)	water (miles)	Low revegetation potential (miles)	Prime Farmland (miles)	Hydric (miles)	Compaction Prone (miles)	Stony-Rocky (miles)	Shallow Bedrock (miles)	Droughty (miles)
Coast																
Gulf Coast	OK	Bryan	151.620	151.727	0.107	OK013	Bernow fine sandy loam, 3 to 5 percent slopes	0.000	0.000	0.000	0.107	0.002	0.107	0.000	0.000	0.000
Gulf Coast	OK	Bryan	151.727	151.743	0.015	OK013	Madill fine sandy loam, 0 to 1 percent slopes, occasionally flooded	0.000	0.000	0.000	0.015	0.000	0.015	0.000	0.000	0.014
Gulf Coast	OK	Bryan	151.743	151.922	0.179	OK013	Boxville fine sandy loam, 3 to 8 percent slopes	0.000	0.000	0.000	0.179	0.004	0.179	0.000	0.000	0.000
Gulf Coast	OK	Bryan	151.922	151.968	0.046	OK013	Bernow fine sandy loam, 1 to 3 percent slopes	0.000	0.000	0.000	0.046	0.001	0.046	0.000	0.000	0.000
Gulf Coast	OK	Bryan	151.968	152.022	0.054	OK013	Muskogee silt loam, 0 to 1 percent slopes	0.000	0.000	0.000	0.054	0.001	0.054	0.000	0.000	0.000
Gulf Coast	OK	Bryan	152.022	152.328	0.306	OK013	Bernow fine sandy loam, 1 to 3 percent slopes	0.000	0.000	0.000	0.306	0.006	0.306	0.000	0.000	0.000
Gulf Coast	OK	Bryan	152.328	152.533	0.205	OK013	Bernow fine sandy loam, 3 to 5 percent slopes	0.000	0.000	0.000	0.205	0.004	0.205	0.000	0.000	0.000
Gulf Coast	OK	Bryan	152.533	152.714	0.182	OK013	Bernow fine sandy loam, 1 to 3 percent slopes	0.000	0.000	0.000	0.182	0.004	0.182	0.000	0.000	0.000
Gulf Coast	OK	Bryan	152.714	152.779	0.065	OK013	Bernow fine sandy loam, 3 to 5 percent slopes	0.000	0.000	0.000	0.065	0.001	0.065	0.000	0.000	0.000
Gulf Coast	OK	Bryan	152.779	152.857	0.078	OK013	Bernow fine sandy loam, 8 to 12 percent slopes	0.000	0.078	0.000	0.000	0.002	0.078	0.008	0.000	0.008
Gulf Coast	OK	Bryan	152.857	152.909	0.052	OK013	Bernow fine sandy loam, 3 to 5 percent slopes	0.000	0.000	0.000	0.052	0.001	0.052	0.000	0.000	0.000
Gulf Coast	OK	Bryan	152.909	153.001	0.092	OK013	Bernow fine sandy loam, 1 to 3 percent slopes	0.000	0.000	0.000	0.092	0.002	0.092	0.000	0.000	0.000
Gulf Coast	OK	Bryan	153.001	153.046	0.045	OK013	Bernow fine sandy loam, 3 to 5 percent slopes	0.000	0.000	0.000	0.045	0.001	0.045	0.000	0.000	0.000
Gulf Coast	OK	Bryan	153.046	153.084	0.038	OK013	Bernow fine sandy loam, 8 to 12 percent slopes	0.000	0.038	0.000	0.000	0.001	0.038	0.004	0.000	0.004
Gulf Coast	OK	Bryan	153.084	153.405	0.321	OK013	Bernow fine sandy loam, 3 to 5 percent slopes	0.000	0.000	0.000	0.321	0.006	0.321	0.000	0.000	0.000
Gulf Coast	OK	Bryan	153.405	153.531	0.126	OK013	Bernow fine sandy loam, 8 to 12 percent slopes	0.000	0.126	0.000	0.000	0.003	0.126	0.013	0.000	0.013
Gulf Coast	OK	Bryan	153.531	153.648	0.117	OK013	Muskogee silt loam, 1 to 3 percent slopes	0.000	0.000	0.000	0.117	0.002	0.117	0.000	0.000	0.000
Gulf Coast	OK	Bryan	153.648	153.663	0.014	OK013	Bernow fine sandy loam, 8 to 12 percent slopes	0.000	0.014	0.000	0.000	0.000	0.014	0.001	0.000	0.001
Gulf Coast	OK	Bryan	153.663	153.758	0.096	OK013	Muskogee silt loam, 1 to 3 percent slopes	0.000	0.000	0.000	0.096	0.002	0.096	0.000	0.000	0.000
Gulf Coast	OK	Bryan	153.758	153.821	0.063	OK013	Bernow fine sandy loam, 8 to 12 percent slopes	0.000	0.063	0.000	0.000	0.001	0.063	0.006	0.000	0.006
Gulf Coast	OK	Bryan	153.821	153.890	0.069	OK013	Muskogee silt loam, 1 to 3 percent slopes	0.000	0.000	0.000	0.069	0.001	0.069	0.000	0.000	0.000
Gulf	OK	Bryan	153.890	153.912	0.022	OK013	Bernow fine sandy loam, 8 to 12 percent slopes	0.000	0.022	0.000	0.000	0.000	0.022	0.002	0.000	0.002

Appendix K – Soils by Milepost – Gulf Coast Section

Pipeline Segment		County	Beginning Milepost	Ending Milepost	Miles	Soil Series	Soil Series Name	Wind (miles)	water (miles)	Low revegetation potential (miles)	Prime Farmland (miles)	Hydric (miles)	Compaction Prone (miles)	Stony-Rocky (miles)	Shallow Bedrock (miles)	Droughty (miles)
Coast																
Gulf Coast	OK	Bryan	153.912	154.242	0.330	OK013	Muskogee silt loam, 1 to 3 percent slopes	0.000	0.000	0.000	0.330	0.007	0.330	0.000	0.000	0.000
Gulf Coast	OK	Bryan	154.242	154.321	0.080	OK013	Boxville fine sandy loam, 3 to 8 percent slopes	0.000	0.000	0.000	0.080	0.002	0.080	0.000	0.000	0.000
Gulf Coast	OK	Bryan	154.321	154.346	0.025	OK013	Muskogee silt loam, 1 to 3 percent slopes	0.000	0.000	0.000	0.025	0.001	0.025	0.000	0.000	0.000
Gulf Coast	OK	Bryan	154.346	154.377	0.031	OK013	Boxville fine sandy loam, 3 to 8 percent slopes	0.000	0.000	0.000	0.031	0.001	0.031	0.000	0.000	0.000
Gulf Coast	OK	Bryan	154.377	154.427	0.050	OK013	Muskogee silt loam, 1 to 3 percent slopes	0.000	0.000	0.000	0.050	0.001	0.050	0.000	0.000	0.000
Gulf Coast	OK	Bryan	154.427	154.495	0.069	OK013	Boxville fine sandy loam, 1 to 3 percent slopes	0.000	0.000	0.000	0.069	0.001	0.069	0.000	0.000	0.000
Gulf Coast	OK	Bryan	154.495	154.602	0.107	OK013	Boxville fine sandy loam, 3 to 8 percent slopes	0.000	0.000	0.000	0.107	0.002	0.107	0.000	0.000	0.000
Gulf Coast	OK	Bryan	154.602	154.728	0.126	OK013	Karma fine sandy loam, 1 to 3 percent slopes	0.000	0.000	0.000	0.126	0.003	0.126	0.000	0.000	0.000
Gulf Coast	OK	Bryan	154.728	154.757	0.029	OK013	Severn fine sandy loam, 0 to 1 percent slopes, rarely flooded	0.000	0.000	0.000	0.029	0.001	0.029	0.000	0.000	0.000
Gulf Coast	OK	Bryan	154.757	155.038	0.281	OK013	Water	0.000	0.000	0.000	0.000	0.006	0.281	0.000	0.000	0.000
Gulf Coast	TX	Fannin	155.038	155.294	0.256	TX147	Oklared-Kiomatia complex, occasionally flooded	0.090	0.000	0.000	0.000	0.005	0.256	0.000	0.000	0.090
Gulf Coast	TX	Fannin	155.294	155.572	0.278	TX147	Norwood silt loam, rarely flooded	0.000	0.000	0.000	0.278	0.006	0.278	0.000	0.000	0.000
Gulf Coast	TX	Fannin	155.572	155.900	0.328	TX147	Severn silt loam, rarely flooded	0.000	0.000	0.000	0.328	0.007	0.328	0.000	0.000	0.000
Gulf Coast	TX	Fannin	155.900	156.997	1.097	TX147	Norwood silt loam, rarely flooded	0.000	0.000	0.000	1.097	0.022	1.097	0.000	0.000	0.000
Gulf Coast	TX	Fannin	156.997	157.262	0.265	TX147	Karma loam, 0 to 2 percent slopes	0.000	0.000	0.000	0.265	0.005	0.265	0.000	0.000	0.000
Gulf Coast	TX	Fannin	157.262	157.547	0.285	TX147	Redlake clay, rarely flooded	0.000	0.000	0.000	0.285	0.006	0.285	0.000	0.000	0.000
Gulf Coast	TX	Fannin	157.547	157.788	0.241	TX147	Karma loam, 0 to 2 percent slopes	0.000	0.000	0.000	0.241	0.005	0.241	0.000	0.000	0.000
Gulf Coast	TX	Fannin	157.788	158.092	0.304	TX147	Okay loam, 0 to 1 percent slopes	0.000	0.000	0.000	0.304	0.006	0.304	0.000	0.000	0.000
Gulf Coast	TX	Fannin	158.092	159.589	1.497	TX147	Muldrow clay loam, rarely flooded	0.000	0.000	0.000	0.000	0.030	1.497	0.000	0.000	0.000
Gulf Coast	TX	Fannin	159.589	159.944	0.355	TX147	Okay loam, 0 to 1 percent slopes	0.000	0.000	0.000	0.355	0.007	0.355	0.000	0.000	0.000
Gulf Coast	TX	Fannin	159.944	160.139	0.195	TX147	Karma loam, 5 to 12 percent slopes, eroded	0.000	0.195	0.000	0.000	0.004	0.195	0.000	0.000	0.000
Gulf	TX	Fannin	160.139	160.337	0.198	TX147	Karma loam, 0 to 2 percent slopes	0.000	0.000	0.000	0.198	0.004	0.198	0.000	0.000	0.000

Appendix K – Soils by Milepost – Gulf Coast Section

Pipeline Segment		County	Beginning Milepost	Ending Milepost	Miles	Soil Series	Soil Series Name	Wind (miles)	water (miles)	Low revegetation potential (miles)	Prime Farmland (miles)	Hydric (miles)	Compaction Prone (miles)	Stony-Rocky (miles)	Shallow Bedrock (miles)	Droughty (miles)
Coast																
Gulf Coast	TX	Fannin	160.337	160.401	0.064	TX147	Karma loam, 5 to 12 percent slopes, eroded	0.000	0.064	0.000	0.000	0.001	0.064	0.000	0.000	0.000
Gulf Coast	TX	Fannin	160.401	161.084	0.683	TX147	Redlake clay, rarely flooded	0.000	0.000	0.000	0.683	0.014	0.683	0.000	0.000	0.000
Gulf Coast	TX	Lamar/Delta	161.084	161.100	0.016	TX614	Water	0.000	0.000	0.000	0.000	0.000	0.016	0.000	0.000	0.000
Gulf Coast	TX	Lamar/Delta	161.100	161.113	0.013	TX614	Desha clay, 0 to 1 percent slopes, frequently flooded	0.000	0.000	0.000	0.012	0.000	0.013	0.000	0.000	0.000
Gulf Coast	TX	Lamar/Delta	161.113	161.176	0.063	TX614	Whakana fine sandy loam, 5 to 12 percent slopes	0.000	0.060	0.000	0.000	0.001	0.063	0.000	0.000	0.000
Gulf Coast	TX	Lamar/Delta	161.176	161.797	0.621	TX614	Karma fine sandy loam, 0 to 1 percent slopes	0.000	0.000	0.000	0.621	0.012	0.621	0.000	0.000	0.000
Gulf Coast	TX	Lamar/Delta	161.797	161.912	0.115	TX614	Derly-Raino complex, 0 to 1 percent slopes	0.000	0.000	0.075	0.000	0.002	0.115	0.000	0.000	0.000
Gulf Coast	TX	Lamar/Delta	161.912	162.373	0.461	TX614	Whakana-Porum complex, 8 to 20 percent slopes	0.000	0.392	0.000	0.000	0.009	0.461	0.000	0.000	0.000
Gulf Coast	TX	Lamar/Delta	162.373	162.398	0.026	TX614	Derly-Raino complex, 0 to 1 percent slopes	0.000	0.000	0.017	0.000	0.001	0.026	0.000	0.000	0.000
Gulf Coast	TX	Lamar/Delta	162.398	162.429	0.031	TX614	Whakana-Porum complex, 8 to 20 percent slopes	0.000	0.026	0.000	0.000	0.001	0.031	0.000	0.000	0.000
Gulf Coast	TX	Fannin	162.429	163.089	0.660	TX147	Whakana very fine sandy loam, 5 to 12 percent slopes	0.000	0.660	0.000	0.000	0.013	0.660	0.000	0.000	0.000
Gulf Coast	TX	Lamar/Delta	163.089	163.126	0.037	TX614	Whakana-Porum complex, 8 to 20 percent slopes	0.000	0.032	0.000	0.000	0.001	0.037	0.000	0.000	0.000
Gulf Coast	TX	Lamar/Delta	163.126	163.552	0.427	TX614	Whakana fine sandy loam, 1 to 5 percent slopes	0.000	0.000	0.000	0.427	0.009	0.427	0.000	0.000	0.000
Gulf Coast	TX	Lamar/Delta	163.552	163.975	0.423	TX614	Whakana-Porum complex, 8 to 20 percent slopes	0.000	0.359	0.000	0.000	0.008	0.423	0.000	0.000	0.000
Gulf Coast	TX	Lamar/Delta	163.975	164.089	0.113	TX614	Whakana fine sandy loam, 1 to 5 percent slopes	0.000	0.000	0.000	0.113	0.002	0.113	0.000	0.000	0.000
Gulf Coast	TX	Lamar/Delta	164.089	164.120	0.031	TX614	Whakana-Porum complex, 8 to 20 percent slopes	0.000	0.026	0.000	0.000	0.001	0.031	0.000	0.000	0.000
Gulf Coast	TX	Lamar/Delta	164.120	164.350	0.231	TX614	Whakana fine sandy loam, 1 to 5 percent slopes	0.000	0.000	0.000	0.231	0.005	0.231	0.000	0.000	0.000
Gulf Coast	TX	Lamar/Delta	164.350	164.381	0.031	TX614	Whakana-Porum complex, 8 to 20 percent slopes	0.000	0.026	0.000	0.000	0.001	0.031	0.000	0.000	0.000
Gulf Coast	TX	Lamar/Delta	164.381	164.494	0.113	TX614	Whakana fine sandy loam, 1 to 5 percent slopes	0.000	0.000	0.000	0.113	0.002	0.113	0.000	0.000	0.000
Gulf Coast	TX	Lamar/Delta	164.494	164.580	0.086	TX614	Whakana-Porum complex, 8 to 20 percent slopes	0.000	0.073	0.000	0.000	0.002	0.086	0.000	0.000	0.000
Gulf Coast	TX	Lamar/Delta	164.580	164.622	0.041	TX614	Whakana fine sandy loam, 1 to 5 percent slopes	0.000	0.000	0.000	0.041	0.001	0.041	0.000	0.000	0.000
Gulf	TX	Lamar/D	164.622	165.155	0.534	TX614	Whakana-Porum complex, 8 to 20 percent slopes	0.000	0.454	0.000	0.000	0.011	0.534	0.000	0.000	0.000

Appendix K – Soils by Milepost – Gulf Coast Section

Pipeline Segment		County	Beginning Milepost	Ending Milepost	Miles	Soil Series	Soil Series Name	Wind (miles)	water (miles)	Low revegetation potential (miles)	Prime Farmland (miles)	Hydric (miles)	Compaction Prone (miles)	Stony-Rocky (miles)	Shallow Bedrock (miles)	Droughty (miles)
Coast		elta														
Gulf Coast	TX	Lamar/Delta	165.155	165.353	0.197	TX614	Guyton silt loam, 0 to 1 percent slopes, frequently flooded	0.000	0.000	0.000	0.000	0.004	0.197	0.000	0.000	0.000
Gulf Coast	TX	Lamar/Delta	165.353	165.514	0.162	TX614	Woodtell loam, 5 to 12 percent slopes	0.000	0.154	0.000	0.000	0.003	0.162	0.000	0.000	0.000
Gulf Coast	TX	Lamar/Delta	165.514	165.813	0.299	TX614	Freestone-Hicota complex, 0 to 3 percent slopes	0.000	0.000	0.030	0.299	0.006	0.299	0.000	0.000	0.000
Gulf Coast	TX	Lamar/Delta	165.813	166.055	0.242	TX614	Woodtell loam, 5 to 12 percent slopes	0.000	0.230	0.000	0.000	0.005	0.242	0.000	0.000	0.000
Gulf Coast	TX	Lamar/Delta	166.055	166.300	0.245	TX614	Freestone-Hicota complex, 0 to 3 percent slopes	0.000	0.000	0.024	0.245	0.005	0.245	0.000	0.000	0.000
Gulf Coast	TX	Lamar/Delta	166.300	166.413	0.113	TX614	Annona loam, 1 to 4 percent slopes	0.000	0.000	0.011	0.000	0.002	0.113	0.000	0.000	0.000
Gulf Coast	TX	Lamar/Delta	166.413	166.746	0.334	TX614	Freestone-Hicota complex, 0 to 3 percent slopes	0.000	0.000	0.033	0.334	0.007	0.334	0.000	0.000	0.000
Gulf Coast	TX	Lamar/Delta	166.746	166.804	0.057	TX614	Annona loam, 1 to 4 percent slopes	0.000	0.000	0.006	0.000	0.001	0.057	0.000	0.000	0.000
Gulf Coast	TX	Lamar/Delta	166.804	167.201	0.397	TX614	Freestone-Hicota complex, 0 to 3 percent slopes	0.000	0.000	0.040	0.397	0.008	0.397	0.000	0.000	0.000
Gulf Coast	TX	Lamar/Delta	167.201	167.224	0.023	TX614	Derly-Raino complex, 0 to 1 percent slopes	0.000	0.000	0.015	0.000	0.000	0.023	0.000	0.000	0.000
Gulf Coast	TX	Lamar/Delta	167.224	167.815	0.591	TX614	Freestone-Hicota complex, 0 to 3 percent slopes	0.000	0.000	0.059	0.591	0.012	0.591	0.000	0.000	0.000
Gulf Coast	TX	Lamar/Delta	167.815	167.872	0.057	TX614	Annona loam, 1 to 4 percent slopes	0.000	0.000	0.006	0.000	0.001	0.057	0.000	0.000	0.000
Gulf Coast	TX	Lamar/Delta	167.872	168.083	0.210	TX614	Woodtell loam, 5 to 12 percent slopes	0.000	0.200	0.000	0.000	0.004	0.210	0.000	0.000	0.000
Gulf Coast	TX	Lamar/Delta	168.083	168.179	0.096	TX614	Derly-Raino complex, 0 to 1 percent slopes	0.000	0.000	0.063	0.000	0.002	0.096	0.000	0.000	0.000
Gulf Coast	TX	Lamar/Delta	168.179	168.296	0.117	TX614	Woodtell loam, 5 to 12 percent slopes	0.000	0.112	0.000	0.000	0.002	0.117	0.000	0.000	0.000
Gulf Coast	TX	Lamar/Delta	168.296	168.636	0.339	TX614	Lassiter silt loam, 0 to 1 percent slopes, frequently flooded	0.000	0.000	0.000	0.000	0.007	0.339	0.000	0.000	0.000
Gulf Coast	TX	Lamar/Delta	168.636	168.802	0.167	TX614	Woodtell loam, 5 to 12 percent slopes	0.000	0.159	0.000	0.000	0.003	0.167	0.000	0.000	0.000
Gulf Coast	TX	Lamar/Delta	168.802	168.926	0.124	TX614	Freestone-Hicota complex, 0 to 3 percent slopes	0.000	0.000	0.012	0.124	0.002	0.124	0.000	0.000	0.000
Gulf Coast	TX	Lamar/Delta	168.926	169.267	0.341	TX614	Crockett loam, 1 to 3 percent slopes	0.000	0.000	0.324	0.000	0.007	0.341	0.000	0.000	0.000
Gulf Coast	TX	Lamar/Delta	169.267	169.553	0.286	TX614	Annona loam, 1 to 4 percent slopes	0.000	0.000	0.029	0.000	0.006	0.286	0.000	0.000	0.000
Gulf Coast	TX	Lamar/Delta	169.553	169.623	0.070	TX614	Derly silt loam, 0 to 1 percent slopes	0.000	0.000	0.063	0.000	0.001	0.070	0.000	0.000	0.000
Gulf	TX	Lamar/D	169.623	169.786	0.163	TX614	Annona loam, 1 to 4 percent slopes	0.000	0.000	0.016	0.000	0.003	0.163	0.000	0.000	0.000

Appendix K – Soils by Milepost – Gulf Coast Section

Pipeline Segment		County	Beginning Milepost	Ending Milepost	Miles	Soil Series	Soil Series Name	Wind (miles)	water (miles)	Low revegetation potential (miles)	Prime Farmland (miles)	Hydric (miles)	Compaction Prone (miles)	Stony-Rocky (miles)	Shallow Bedrock (miles)	Droughty (miles)
Coast		elta														
Gulf Coast	TX	Lamar/Delta	169.786	170.132	0.346	TX614	Roxton clay, 0 to 1 percent slopes, frequently flooded	0.000	0.000	0.000	0.000	0.007	0.346	0.000	0.000	0.000
Gulf Coast	TX	Lamar/Delta	170.132	170.456	0.324	TX614	Normangee clay loam, 2 to 6 percent slopes, eroded	0.000	0.000	0.324	0.000	0.006	0.324	0.292	0.000	0.000
Gulf Coast	TX	Lamar/Delta	170.456	170.633	0.177	TX614	Crockett loam, 1 to 3 percent slopes	0.000	0.000	0.168	0.000	0.004	0.177	0.000	0.000	0.000
Gulf Coast	TX	Lamar/Delta	170.633	170.843	0.211	TX614	Mabank-Crockett complex, 0 to 1 percent slopes	0.000	0.000	0.076	0.000	0.004	0.211	0.000	0.000	0.000
Gulf Coast	TX	Lamar/Delta	170.843	171.153	0.310	TX614	Wilson silty loam, 0 to 2 percent slopes	0.000	0.000	0.295	0.000	0.006	0.310	0.000	0.000	0.000
Gulf Coast	TX	Lamar/Delta	171.153	171.487	0.334	TX614	Crockett loam, 1 to 3 percent slopes	0.000	0.000	0.317	0.000	0.007	0.334	0.000	0.000	0.000
Gulf Coast	TX	Lamar/Delta	171.487	171.704	0.217	TX614	Mabank-Crockett complex, 0 to 1 percent slopes	0.000	0.000	0.078	0.000	0.004	0.217	0.000	0.000	0.000
Gulf Coast	TX	Lamar/Delta	171.704	171.876	0.172	TX614	Lassiter silt loam, 0 to 1 percent slopes, frequently flooded	0.000	0.000	0.000	0.000	0.003	0.172	0.000	0.000	0.000
Gulf Coast	TX	Lamar/Delta	171.876	171.998	0.122	TX614	Crockett loam, 1 to 3 percent slopes	0.000	0.000	0.116	0.000	0.002	0.122	0.000	0.000	0.000
Gulf Coast	TX	Lamar/Delta	171.998	172.105	0.107	TX614	Woodtell loam, 5 to 12 percent slopes	0.000	0.102	0.000	0.000	0.002	0.107	0.000	0.000	0.000
Gulf Coast	TX	Lamar/Delta	172.105	172.181	0.077	TX614	Crockett loam, 1 to 3 percent slopes	0.000	0.000	0.073	0.000	0.002	0.077	0.000	0.000	0.000
Gulf Coast	TX	Lamar/Delta	172.181	172.208	0.027	TX614	Woodtell loam, 5 to 12 percent slopes	0.000	0.025	0.000	0.000	0.001	0.027	0.000	0.000	0.000
Gulf Coast	TX	Lamar/Delta	172.208	172.301	0.092	TX614	Parisian silt loam, 1 to 3 percent slopes	0.000	0.000	0.000	0.092	0.002	0.092	0.000	0.000	0.000
Gulf Coast	TX	Lamar/Delta	172.301	172.415	0.114	TX614	Woodtell loam, 5 to 12 percent slopes	0.000	0.108	0.000	0.000	0.002	0.114	0.000	0.000	0.000
Gulf Coast	TX	Lamar/Delta	172.415	172.509	0.094	TX614	Crockett loam, 1 to 3 percent slopes	0.000	0.000	0.089	0.000	0.002	0.094	0.000	0.000	0.000
Gulf Coast	TX	Lamar/Delta	172.509	172.697	0.188	TX614	Mabank-Crockett complex, 0 to 1 percent slopes	0.000	0.000	0.068	0.000	0.004	0.188	0.000	0.000	0.000
Gulf Coast	TX	Lamar/Delta	172.697	173.095	0.398	TX614	Crockett loam, 1 to 3 percent slopes	0.000	0.000	0.378	0.000	0.008	0.398	0.000	0.000	0.000
Gulf Coast	TX	Lamar/Delta	173.095	173.144	0.049	TX614	Wilson silty loam, 0 to 2 percent slopes	0.000	0.000	0.047	0.000	0.001	0.049	0.000	0.000	0.000
Gulf Coast	TX	Lamar/Delta	173.144	173.292	0.148	TX614	Lassiter silt loam, 0 to 1 percent slopes, frequently flooded	0.000	0.000	0.000	0.000	0.003	0.148	0.000	0.000	0.000
Gulf Coast	TX	Lamar/Delta	173.292	173.921	0.629	TX614	Crockett loam, 1 to 3 percent slopes	0.000	0.000	0.598	0.000	0.013	0.629	0.000	0.000	0.000
Gulf Coast	TX	Lamar/Delta	173.921	173.931	0.010	TX614	Normangee clay loam, 2 to 6 percent slopes, eroded	0.000	0.000	0.010	0.000	0.000	0.010	0.009	0.000	0.000
Gulf	TX	Lamar/D	173.931	173.948	0.018	TX614	Crockett loam, 1 to 3 percent slopes	0.000	0.000	0.017	0.000	0.000	0.018	0.000	0.000	0.000

Appendix K – Soils by Milepost – Gulf Coast Section

Pipeline Segment		County	Beginning Milepost	Ending Milepost	Miles	Soil Series	Soil Series Name	Wind (miles)	water (miles)	Low revegetation potential (miles)	Prime Farmland (miles)	Hydric (miles)	Compaction Prone (miles)	Stony-Rocky (miles)	Shallow Bedrock (miles)	Droughty (miles)
Coast		elta														
Gulf Coast	TX	Lamar/Delta	173.948	174.143	0.194	TX614	Normangee clay loam, 2 to 6 percent slopes, eroded	0.000	0.000	0.194	0.000	0.004	0.194	0.175	0.000	0.000
Gulf Coast	TX	Lamar/Delta	174.143	174.364	0.221	TX614	Crockett loam, 1 to 3 percent slopes	0.000	0.000	0.210	0.000	0.004	0.221	0.000	0.000	0.000
Gulf Coast	TX	Lamar/Delta	174.364	174.414	0.050	TX614	Normangee clay loam, 2 to 6 percent slopes, eroded	0.000	0.000	0.050	0.000	0.001	0.050	0.045	0.000	0.000
Gulf Coast	TX	Lamar/Delta	174.414	174.496	0.081	TX614	Crockett loam, 1 to 3 percent slopes	0.000	0.000	0.077	0.000	0.002	0.081	0.000	0.000	0.000
Gulf Coast	TX	Lamar/Delta	174.496	175.186	0.690	TX614	Wilson silty loam, 0 to 2 percent slopes	0.000	0.000	0.656	0.000	0.014	0.690	0.000	0.000	0.000
Gulf Coast	TX	Lamar/Delta	175.186	175.287	0.102	TX614	Crockett loam, 1 to 3 percent slopes	0.000	0.000	0.097	0.000	0.002	0.102	0.000	0.000	0.000
Gulf Coast	TX	Lamar/Delta	175.287	175.380	0.093	TX614	Parisian silt loam, 1 to 3 percent slopes	0.000	0.000	0.000	0.093	0.002	0.093	0.000	0.000	0.000
Gulf Coast	TX	Lamar/Delta	175.380	175.475	0.095	TX614	Lassiter silt loam, 0 to 1 percent slopes, frequently flooded	0.000	0.000	0.000	0.000	0.002	0.095	0.000	0.000	0.000
Gulf Coast	TX	Lamar/Delta	175.475	175.500	0.025	TX614	Wilson silty loam, 0 to 2 percent slopes	0.000	0.000	0.024	0.000	0.001	0.025	0.000	0.000	0.000
Gulf Coast	TX	Lamar/Delta	175.500	176.132	0.631	TX614	Normangee clay loam, 1 to 3 percent slopes	0.000	0.000	0.568	0.000	0.013	0.631	0.568	0.000	0.000
Gulf Coast	TX	Lamar/Delta	176.132	176.200	0.069	TX614	Wilson silty loam, 0 to 2 percent slopes	0.000	0.000	0.065	0.000	0.001	0.069	0.000	0.000	0.000
Gulf Coast	TX	Lamar/Delta	176.200	177.014	0.814	TX614	Normangee clay loam, 1 to 3 percent slopes	0.000	0.000	0.732	0.000	0.016	0.814	0.732	0.000	0.000
Gulf Coast	TX	Lamar/Delta	177.014	177.074	0.060	TX614	Houston Black clay, 1 to 3 percent slopes	0.000	0.000	0.057	0.060	0.001	0.060	0.000	0.000	0.000
Gulf Coast	TX	Lamar/Delta	177.074	177.400	0.326	TX614	Heiden clay, 2 to 5 percent slopes	0.000	0.000	0.000	0.326	0.007	0.326	0.000	0.000	0.000
Gulf Coast	TX	Lamar/Delta	177.400	179.211	1.811	TX614	Houston Black clay, 1 to 3 percent slopes	0.000	0.000	1.720	1.811	0.036	1.811	0.000	0.000	0.000
Gulf Coast	TX	Lamar/Delta	179.211	179.813	0.603	TX614	Houston Black clay, 0 to 1 percent slopes	0.000	0.000	0.572	0.603	0.012	0.603	0.000	0.000	0.000
Gulf Coast	TX	Lamar/Delta	179.813	180.216	0.403	TX614	Houston Black clay, 1 to 3 percent slopes	0.000	0.000	0.383	0.403	0.008	0.403	0.000	0.000	0.000
Gulf Coast	TX	Lamar/Delta	180.216	180.336	0.120	TX614	Houston Black clay, 0 to 1 percent slopes	0.000	0.000	0.114	0.120	0.002	0.120	0.000	0.000	0.000
Gulf Coast	TX	Lamar/Delta	180.336	180.627	0.291	TX614	Houston Black clay, 1 to 3 percent slopes	0.000	0.000	0.276	0.291	0.006	0.291	0.000	0.000	0.000
Gulf Coast	TX	Lamar/Delta	180.627	180.637	0.010	TX614	Austin silty clay, 1 to 3 percent slopes	0.000	0.000	0.000	0.010	0.000	0.010	0.000	0.000	0.000
Gulf Coast	TX	Lamar/Delta	180.637	180.969	0.333	TX614	Stephen silty clay, 1 to 3 percent slopes	0.000	0.000	0.000	0.000	0.007	0.333	0.000	0.000	0.000
Gulf	TX	Lamar/D	180.969	181.030	0.061	TX614	Houston Black clay, 1 to 3 percent slopes	0.000	0.000	0.058	0.061	0.001	0.061	0.000	0.000	0.000

Appendix K – Soils by Milepost – Gulf Coast Section

Pipeline Segment		County	Beginning Milepost	Ending Milepost	Miles	Soil Series	Soil Series Name	Wind (miles)	water (miles)	Low revegetation potential (miles)	Prime Farmland (miles)	Hydric (miles)	Compaction Prone (miles)	Stony-Rocky (miles)	Shallow Bedrock (miles)	Droughty (miles)
Coast		elta														
Gulf Coast	TX	Lamar/Delta	181.030	181.136	0.106	TX614	Leson clay, 1 to 3 percent slopes	0.000	0.000	0.101	0.106	0.002	0.106	0.000	0.000	0.000
Gulf Coast	TX	Lamar/Delta	181.136	181.349	0.213	TX614	Stephen-Eddy complex, 2 to 5 percent slopes	0.000	0.000	0.000	0.000	0.004	0.213	0.072	0.000	0.000
Gulf Coast	TX	Lamar/Delta	181.349	181.935	0.586	TX614	Austin silty clay, 1 to 3 percent slopes	0.000	0.000	0.000	0.586	0.012	0.586	0.000	0.000	0.000
Gulf Coast	TX	Lamar/Delta	181.935	182.253	0.319	TX614	Houston Black clay, 1 to 3 percent slopes	0.000	0.000	0.303	0.319	0.006	0.319	0.000	0.000	0.000
Gulf Coast	TX	Lamar/Delta	182.253	182.332	0.078	TX614	Heiden-Ferris complex, 3 to 5 percent slopes	0.000	0.000	0.000	0.078	0.002	0.078	0.000	0.000	0.000
Gulf Coast	TX	Lamar/Delta	182.332	182.332	0.000	TX614	Houston Black clay, 1 to 3 percent slopes	0.000	0.000	0.000	0.000	0.000	0.000	0.000	0.000	0.000
Gulf Coast	TX	Lamar/Delta	182.332	182.345	0.013	TX614	Heiden clay, 2 to 5 percent slopes	0.000	0.000	0.000	0.013	0.000	0.013	0.000	0.000	0.000
Gulf Coast	TX	Lamar/Delta	182.345	182.511	0.166	TX614	Houston Black clay, 1 to 3 percent slopes	0.000	0.000	0.157	0.166	0.000	0.166	0.000	0.000	0.000
Gulf Coast	TX	Lamar/Delta	182.511	182.625	0.114	TX614	Heiden-Ferris complex, 3 to 5 percent slopes	0.000	0.000	0.000	0.114	0.000	0.114	0.000	0.000	0.000
Gulf Coast	TX	Lamar/Delta	182.625	182.800	0.175	TX614	Houston Black clay, 1 to 3 percent slopes	0.000	0.000	0.166	0.175	0.000	0.175	0.000	0.000	0.000
Gulf Coast	TX	Lamar/Delta	182.800	183.218	0.418	TX614	Ferris clay, 5 to 12 percent slopes, eroded	0.000	0.397	0.000	0.000	0.000	0.418	0.000	0.000	0.000
Gulf Coast	TX	Lamar/Delta	183.218	183.335	0.118	TX614	Heiden-Ferris complex, 3 to 5 percent slopes	0.000	0.000	0.000	0.118	0.000	0.118	0.000	0.000	0.000
Gulf Coast	TX	Lamar/Delta	183.335	183.745	0.410	TX614	Ferris clay, 5 to 12 percent slopes, eroded	0.000	0.389	0.000	0.000	0.000	0.410	0.000	0.000	0.000
Gulf Coast	TX	Lamar/Delta	183.745	183.904	0.159	TX614	Houston Black clay, 1 to 3 percent slopes	0.000	0.000	0.151	0.159	0.000	0.159	0.000	0.000	0.000
Gulf Coast	TX	Lamar/Delta	183.904	183.980	0.077	TX614	Ferris clay, 5 to 12 percent slopes, eroded	0.000	0.073	0.000	0.000	0.000	0.077	0.000	0.000	0.000
Gulf Coast	TX	Lamar/Delta	183.980	184.098	0.118	TX614	Heiden-Ferris complex, 3 to 5 percent slopes	0.000	0.000	0.000	0.118	0.000	0.118	0.000	0.000	0.000
Gulf Coast	TX	Lamar/Delta	184.098	184.720	0.622	TX614	Ferris clay, 5 to 12 percent slopes, eroded	0.000	0.590	0.000	0.000	0.000	0.622	0.000	0.000	0.000
Gulf Coast	TX	Lamar/Delta	184.720	184.840	0.120	TX614	Houston Black clay, 1 to 3 percent slopes	0.000	0.000	0.114	0.120	0.000	0.120	0.000	0.000	0.000
Gulf Coast	TX	Lamar/Delta	184.840	185.028	0.187	TX614	Elbon silty clay loam, 0 to 1 percent slopes, frequently flooded	0.000	0.000	0.000	0.000	0.000	0.187	0.000	0.000	0.000
Gulf Coast	TX	Lamar/Delta	185.028	185.622	0.594	TX614	Houston Black clay, 1 to 3 percent slopes	0.000	0.000	0.564	0.594	0.000	0.594	0.000	0.000	0.000
Gulf Coast	TX	Lamar/Delta	185.622	185.848	0.226	TX614	Water	0.000	0.000	0.000	0.000	0.000	0.226	0.000	0.000	0.000
Gulf	TX	Lamar/D	185.848	186.091	0.243	TX614	Houston Black clay, 1 to 3 percent slopes	0.000	0.000	0.231	0.243	0.000	0.243	0.000	0.000	0.000

Appendix K – Soils by Milepost – Gulf Coast Section

Pipeline Segment		County	Beginning Milepost	Ending Milepost	Miles	Soil Series	Soil Series Name	Wind (miles)	water (miles)	Low revegetation potential (miles)	Prime Farmland (miles)	Hydric (miles)	Compaction Prone (miles)	Stony-Rocky (miles)	Shallow Bedrock (miles)	Droughty (miles)
Coast		elta														
Gulf Coast	TX	Lamar/Delta	186.091	186.173	0.082	TX614	Ferris clay, 5 to 12 percent slopes, eroded	0.000	0.078	0.000	0.000	0.000	0.082	0.000	0.000	0.000
Gulf Coast	TX	Lamar/Delta	186.173	186.319	0.147	TX614	Houston Black clay, 1 to 3 percent slopes	0.000	0.000	0.139	0.147	0.000	0.147	0.000	0.000	0.000
Gulf Coast	TX	Lamar/Delta	186.319	186.514	0.195	TX614	Ferris clay, 5 to 12 percent slopes, eroded	0.000	0.185	0.000	0.000	0.000	0.195	0.000	0.000	0.000
Gulf Coast	TX	Lamar/Delta	186.514	186.546	0.032	TX614	Heiden-Ferris complex, 3 to 5 percent slopes	0.000	0.000	0.000	0.032	0.000	0.032	0.000	0.000	0.000
Gulf Coast	TX	Lamar/Delta	186.546	186.601	0.056	TX614	Houston Black clay, 1 to 3 percent slopes	0.000	0.000	0.053	0.056	0.000	0.056	0.000	0.000	0.000
Gulf Coast	TX	Lamar/Delta	186.601	186.623	0.022	TX614	Heiden-Ferris complex, 3 to 5 percent slopes	0.000	0.000	0.000	0.022	0.000	0.022	0.000	0.000	0.000
Gulf Coast	TX	Lamar/Delta	186.623	187.015	0.391	TX614	Houston Black clay, 1 to 3 percent slopes	0.000	0.000	0.372	0.391	0.000	0.391	0.000	0.000	0.000
Gulf Coast	TX	Lamar/Delta	187.015	187.369	0.355	TX614	Heiden-Ferris complex, 3 to 5 percent slopes	0.000	0.000	0.000	0.355	0.000	0.355	0.000	0.000	0.000
Gulf Coast	TX	Lamar/Delta	187.369	187.706	0.337	TX614	Trinity clay, 0 to 1 percent slopes, occasionally flooded	0.000	0.000	0.000	0.337	0.000	0.337	0.000	0.000	0.000
Gulf Coast	TX	Lamar/Delta	187.706	187.846	0.141	TX614	Houston Black clay, 1 to 3 percent slopes	0.000	0.000	0.134	0.141	0.000	0.141	0.000	0.000	0.000
Gulf Coast	TX	Lamar/Delta	187.846	188.000	0.154	TX614	Heiden clay, 2 to 5 percent slopes	0.000	0.000	0.000	0.154	0.000	0.154	0.000	0.000	0.000
Gulf Coast	TX	Lamar/Delta	188.000	188.040	0.040	TX614	Houston Black clay, 1 to 3 percent slopes	0.000	0.000	0.038	0.040	0.000	0.040	0.000	0.000	0.000
Gulf Coast	TX	Lamar/Delta	188.040	189.024	0.984	TX614	Trinity clay, 0 to 1 percent slopes, occasionally flooded	0.000	0.000	0.000	0.984	0.000	0.984	0.000	0.000	0.000
Gulf Coast	TX	Lamar/Delta	189.024	189.194	0.170	TX614	Trinity clay, 0 to 1 percent slopes, frequently flooded	0.000	0.000	0.000	0.000	0.161	0.170	0.000	0.000	0.000
Gulf Coast	TX	Lamar/Delta	189.194	189.246	0.052	TX614	Trinity clay, 0 to 1 percent slopes, occasionally flooded	0.000	0.000	0.000	0.052	0.000	0.052	0.000	0.000	0.000
Gulf Coast	TX	Lamar/Delta	189.246	189.358	0.112	TX614	Trinity clay, 0 to 1 percent slopes, frequently flooded	0.000	0.000	0.000	0.000	0.107	0.112	0.000	0.000	0.000
Gulf Coast	TX	Lamar/Delta	189.358	189.788	0.430	TX614	Trinity clay, 0 to 1 percent slopes, occasionally flooded	0.000	0.000	0.000	0.430	0.000	0.430	0.000	0.000	0.000
Gulf Coast	TX	Lamar/Delta	189.788	189.822	0.034	TX614	Water	0.000	0.000	0.000	0.000	0.000	0.034	0.000	0.000	0.000
Gulf Coast	TX	Lamar/Delta	189.822	190.923	1.101	TX614	Trinity clay, 0 to 1 percent slopes, occasionally flooded	0.000	0.000	0.000	1.101	0.000	1.101	0.000	0.000	0.000
Gulf Coast	TX	Lamar/Delta	190.923	191.008	0.085	TX614	Houston Black clay, 1 to 3 percent slopes	0.000	0.000	0.081	0.085	0.000	0.085	0.000	0.000	0.000
Gulf Coast	TX	Lamar/Delta	191.008	191.090	0.082	TX614	Heiden clay, 2 to 5 percent slopes	0.000	0.000	0.000	0.082	0.000	0.082	0.000	0.000	0.000
Gulf	TX	Lamar/D	191.090	191.217	0.128	TX614	Ferris clay, 5 to 12 percent slopes, eroded	0.000	0.121	0.000	0.000	0.000	0.128	0.000	0.000	0.000

Appendix K – Soils by Milepost – Gulf Coast Section

Pipeline Segment		County	Beginning Milepost	Ending Milepost	Miles	Soil Series	Soil Series Name	Wind (miles)	water (miles)	Low revegetation potential (miles)	Prime Farmland (miles)	Hydric (miles)	Compaction Prone (miles)	Stony-Rocky (miles)	Shallow Bedrock (miles)	Droughty (miles)
Coast		elta														
Gulf Coast	TX	Lamar/Delta	191.217	191.314	0.096	TX614	Houston Black clay, 1 to 3 percent slopes	0.000	0.000	0.092	0.096	0.000	0.096	0.000	0.000	0.000
Gulf Coast	TX	Lamar/Delta	191.314	191.387	0.073	TX614	Ferris clay, 5 to 12 percent slopes, eroded	0.000	0.069	0.000	0.000	0.000	0.073	0.000	0.000	0.000
Gulf Coast	TX	Lamar/Delta	191.387	191.739	0.352	TX614	Houston Black clay, 1 to 3 percent slopes	0.000	0.000	0.335	0.352	0.000	0.352	0.000	0.000	0.000
Gulf Coast	TX	Lamar/Delta	191.739	192.211	0.472	TX614	Leson clay, 1 to 3 percent slopes	0.000	0.000	0.449	0.472	0.000	0.472	0.000	0.000	0.000
Gulf Coast	TX	Lamar/Delta	192.211	192.434	0.223	TX614	Wilson silty loam, 0 to 2 percent slopes	0.000	0.000	0.212	0.000	0.000	0.223	0.000	0.000	0.000
Gulf Coast	TX	Lamar/Delta	192.434	192.535	0.101	TX614	Leson clay, 1 to 3 percent slopes	0.000	0.000	0.096	0.101	0.000	0.101	0.000	0.000	0.000
Gulf Coast	TX	Lamar/Delta	192.535	192.708	0.173	TX614	Deport clay, 1 to 3 percent slopes	0.000	0.000	0.017	0.173	0.017	0.173	0.000	0.000	0.000
Gulf Coast	TX	Lamar/Delta	192.708	192.966	0.258	TX614	Burleson clay, 0 to 1 percent slopes	0.000	0.000	0.245	0.258	0.000	0.258	0.000	0.000	0.000
Gulf Coast	TX	Lamar/Delta	192.966	193.086	0.120	TX614	Deport clay, 1 to 3 percent slopes	0.000	0.000	0.012	0.120	0.012	0.120	0.000	0.000	0.000
Gulf Coast	TX	Lamar/Delta	193.086	193.314	0.228	TX614	Kaufman clay, 0 to 1 percent slopes, frequently flooded	0.000	0.000	0.000	0.000	0.217	0.228	0.000	0.000	0.000
Gulf Coast	TX	Lamar/Delta	193.314	193.545	0.231	TX614	Deport clay, 1 to 3 percent slopes	0.000	0.000	0.023	0.231	0.023	0.231	0.000	0.000	0.000
Gulf Coast	TX	Lamar/Delta	193.545	193.617	0.072	TX614	Leson clay, 1 to 3 percent slopes	0.000	0.000	0.069	0.072	0.000	0.072	0.000	0.000	0.000
Gulf Coast	TX	Lamar/Delta	193.617	193.874	0.257	TX614	Deport clay, 1 to 3 percent slopes	0.000	0.000	0.026	0.257	0.026	0.257	0.000	0.000	0.000
Gulf Coast	TX	Lamar/Delta	193.874	193.961	0.087	TX614	Kaufman clay, 0 to 1 percent slopes, frequently flooded	0.000	0.000	0.000	0.000	0.082	0.087	0.000	0.000	0.000
Gulf Coast	TX	Lamar/Delta	193.961	194.783	0.822	TX614	Leson clay, 1 to 3 percent slopes	0.000	0.000	0.781	0.822	0.000	0.822	0.000	0.000	0.000
Gulf Coast	TX	Lamar/Delta	194.783	194.827	0.044	TX614	Trinity clay, 0 to 1 percent slopes, frequently flooded	0.000	0.000	0.000	0.000	0.042	0.044	0.000	0.000	0.000
Gulf Coast	TX	Lamar/Delta	194.827	194.980	0.154	TX614	Leson clay, 1 to 3 percent slopes	0.000	0.000	0.146	0.154	0.000	0.154	0.000	0.000	0.000
Gulf Coast	TX	Lamar/Delta	194.980	195.083	0.103	TX614	Houston Black clay, 1 to 3 percent slopes	0.000	0.000	0.098	0.103	0.000	0.103	0.000	0.000	0.000
Gulf Coast	TX	Lamar/Delta	195.083	195.371	0.288	TX614	Leson clay, 1 to 3 percent slopes	0.000	0.000	0.273	0.288	0.000	0.288	0.000	0.000	0.000
Gulf Coast	TX	Lamar/Delta	195.371	195.499	0.128	TX614	Heiden clay, 2 to 5 percent slopes	0.000	0.000	0.000	0.128	0.000	0.128	0.000	0.000	0.000
Gulf Coast	TX	Lamar/Delta	195.499	195.611	0.112	TX614	Leson clay, 1 to 3 percent slopes	0.000	0.000	0.107	0.112	0.000	0.112	0.000	0.000	0.000
Gulf	TX	Lamar/D	195.611	195.689	0.078	TX614	Heiden clay, 2 to 5 percent slopes	0.000	0.000	0.000	0.078	0.000	0.078	0.000	0.000	0.000

Appendix K – Soils by Milepost – Gulf Coast Section

Pipeline Segment		County	Beginning Milepost	Ending Milepost	Miles	Soil Series	Soil Series Name	Wind (miles)	water (miles)	Low revegetation potential (miles)	Prime Farmland (miles)	Hydric (miles)	Compaction Prone (miles)	Stony-Rocky (miles)	Shallow Bedrock (miles)	Droughty (miles)
Coast		elta														
Gulf Coast	TX	Lamar/Delta	195.689	196.344	0.655	TX614	Leson clay, 1 to 3 percent slopes	0.000	0.000	0.622	0.655	0.000	0.655	0.000	0.000	0.000
Gulf Coast	TX	Lamar/Delta	196.344	196.442	0.098	TX614	Heiden clay, 2 to 5 percent slopes	0.000	0.000	0.000	0.098	0.000	0.098	0.000	0.000	0.000
Gulf Coast	TX	Lamar/Delta	196.442	196.655	0.213	TX614	Heiden-Ferris complex, 3 to 5 percent slopes	0.000	0.000	0.000	0.213	0.000	0.213	0.000	0.000	0.000
Gulf Coast	TX	Lamar/Delta	196.655	196.674	0.018	TX614	Leson clay, 1 to 3 percent slopes	0.000	0.000	0.017	0.018	0.000	0.018	0.000	0.000	0.000
Gulf Coast	TX	Lamar/Delta	196.674	196.739	0.066	TX614	Houston Black clay, 1 to 3 percent slopes	0.000	0.000	0.062	0.066	0.000	0.066	0.000	0.000	0.000
Gulf Coast	TX	Lamar/Delta	196.739	196.821	0.082	TX614	Heiden clay, 2 to 5 percent slopes	0.000	0.000	0.000	0.082	0.000	0.082	0.000	0.000	0.000
Gulf Coast	TX	Lamar/Delta	196.821	197.017	0.196	TX614	Deport clay, 1 to 3 percent slopes	0.000	0.000	0.020	0.196	0.020	0.196	0.000	0.000	0.000
Gulf Coast	TX	Lamar/Delta	197.017	197.277	0.261	TX614	Wilson silty loam, 0 to 2 percent slopes	0.000	0.000	0.247	0.000	0.000	0.261	0.000	0.000	0.000
Gulf Coast	TX	Lamar/Delta	197.277	197.498	0.221	TX614	Heiden clay, 2 to 5 percent slopes	0.000	0.000	0.000	0.221	0.000	0.221	0.000	0.000	0.000
Gulf Coast	TX	Lamar/Delta	197.498	197.545	0.047	TX614	Normangee clay loam, 2 to 6 percent slopes, eroded	0.000	0.000	0.047	0.000	0.000	0.047	0.042	0.000	0.000
Gulf Coast	TX	Lamar/Delta	197.545	197.624	0.080	TX614	Wilson silty loam, 0 to 2 percent slopes	0.000	0.000	0.076	0.000	0.000	0.080	0.000	0.000	0.000
Gulf Coast	TX	Lamar/Delta	197.624	197.827	0.203	TX614	Normangee clay loam, 2 to 6 percent slopes, eroded	0.000	0.000	0.203	0.000	0.000	0.203	0.183	0.000	0.000
Gulf Coast	TX	Lamar/Delta	197.827	197.931	0.104	TX614	Annona loam, 1 to 4 percent slopes	0.000	0.000	0.010	0.000	0.010	0.104	0.000	0.000	0.000
Gulf Coast	TX	Lamar/Delta	197.931	198.063	0.132	TX614	Crockett loam, 1 to 3 percent slopes	0.000	0.000	0.125	0.000	0.000	0.132	0.000	0.000	0.000
Gulf Coast	TX	Lamar/Delta	198.063	198.084	0.021	TX614	Annona loam, 1 to 4 percent slopes	0.000	0.000	0.002	0.000	0.002	0.021	0.000	0.000	0.000
Gulf Coast	TX	Lamar/Delta	198.084	198.092	0.008	TX614	Crockett loam, 1 to 3 percent slopes	0.000	0.000	0.008	0.000	0.000	0.008	0.000	0.000	0.000
Gulf Coast	TX	Lamar/Delta	198.092	198.256	0.164	TX614	Annona loam, 1 to 4 percent slopes	0.000	0.000	0.016	0.000	0.016	0.164	0.000	0.000	0.000
Gulf Coast	TX	Lamar/Delta	198.256	198.759	0.503	TX614	Wilson silty loam, 0 to 2 percent slopes	0.000	0.000	0.477	0.000	0.000	0.503	0.000	0.000	0.000
Gulf Coast	TX	Lamar/Delta	198.759	198.779	0.021	TX614	Woodtell loam, 5 to 12 percent slopes	0.000	0.020	0.000	0.000	0.000	0.021	0.000	0.000	0.000
Gulf Coast	TX	Lamar/Delta	198.779	199.775	0.996	TX614	Wilson silty loam, 0 to 2 percent slopes	0.000	0.000	0.946	0.000	0.000	0.996	0.000	0.000	0.000
Gulf Coast	TX	Lamar/Delta	199.775	200.130	0.355	TX614	Annona loam, 1 to 4 percent slopes	0.000	0.000	0.035	0.000	0.035	0.355	0.000	0.000	0.000
Gulf	TX	Lamar/D	200.130	200.187	0.057	TX614	Woodtell loam, 5 to 12 percent slopes	0.000	0.054	0.000	0.000	0.000	0.057	0.000	0.000	0.000

Appendix K – Soils by Milepost – Gulf Coast Section

Pipeline Segment		County	Beginning Milepost	Ending Milepost	Miles	Soil Series	Soil Series Name	Wind (miles)	water (miles)	Low revegetation potential (miles)	Prime Farmland (miles)	Hydric (miles)	Compaction Prone (miles)	Stony-Rocky (miles)	Shallow Bedrock (miles)	Droughty (miles)
Coast		elta														
Gulf Coast	TX	Lamar/Delta	200.187	200.320	0.134	TX614	Annona loam, 1 to 4 percent slopes	0.000	0.000	0.013	0.000	0.013	0.134	0.000	0.000	0.000
Gulf Coast	TX	Lamar/Delta	200.320	200.424	0.103	TX614	Woodtell loam, 5 to 12 percent slopes	0.000	0.098	0.000	0.000	0.000	0.103	0.000	0.000	0.000
Gulf Coast	TX	Lamar/Delta	200.424	200.726	0.302	TX614	Kaufman clay, 0 to 1 percent slopes, frequently flooded	0.000	0.000	0.000	0.000	0.287	0.302	0.000	0.000	0.000
Gulf Coast	TX	Hopkins	200.726	201.308	0.582	TX610	Kaufman clay	0.000	0.000	0.000	0.000	0.553	0.582	0.000	0.000	0.000
Gulf Coast	TX	Hopkins	201.308	201.422	0.115	TX610	Crockett loam, 2 to 5 percent slops, eroded	0.000	0.000	0.115	0.000	0.000	0.115	0.000	0.000	0.000
Gulf Coast	TX	Hopkins	201.422	202.063	0.641	TX610	Kaufman clay	0.000	0.000	0.000	0.000	0.609	0.641	0.000	0.000	0.000
Gulf Coast	TX	Hopkins	202.063	202.348	0.286	TX610	Nahatche soils	0.000	0.000	0.000	0.000	0.271	0.286	0.000	0.000	0.000
Gulf Coast	TX	Hopkins	202.348	202.360	0.012	TX610	Wilson clay loam, 0 to 2 percent slopes	0.000	0.000	0.012	0.000	0.000	0.012	0.000	0.000	0.000
Gulf Coast	TX	Hopkins	202.360	202.464	0.104	TX610	Bazette clay loam, 5 to 12 percent slopes	0.000	0.094	0.000	0.000	0.000	0.104	0.094	0.000	0.000
Gulf Coast	TX	Hopkins	202.464	202.579	0.115	TX610	Woodtell loam, 2 to 5 percent slopes	0.000	0.000	0.000	0.000	0.000	0.115	0.000	0.000	0.000
Gulf Coast	TX	Hopkins	202.579	202.590	0.011	TX610	Bazette clay loam, 5 to 12 percent slopes	0.000	0.010	0.000	0.000	0.000	0.011	0.010	0.000	0.000
Gulf Coast	TX	Hopkins	202.590	202.755	0.165	TX610	Woodtell loam, 2 to 5 percent slopes	0.000	0.000	0.000	0.000	0.000	0.165	0.000	0.000	0.000
Gulf Coast	TX	Hopkins	202.755	202.791	0.036	TX610	Bazette clay loam, 5 to 12 percent slopes	0.000	0.032	0.000	0.000	0.000	0.036	0.032	0.000	0.000
Gulf Coast	TX	Hopkins	202.791	202.884	0.093	TX610	Bazette clay loam, 3 to 5 percent slopes	0.000	0.000	0.000	0.093	0.000	0.093	0.093	0.000	0.000
Gulf Coast	TX	Hopkins	202.884	202.939	0.055	TX610	Bazette clay loam, 5 to 12 percent slopes	0.000	0.050	0.000	0.000	0.000	0.055	0.050	0.000	0.000
Gulf Coast	TX	Hopkins	202.939	203.011	0.072	TX610	Bazette clay loam, 3 to 5 percent slopes	0.000	0.000	0.000	0.072	0.000	0.072	0.072	0.000	0.000
Gulf Coast	TX	Hopkins	203.011	203.144	0.132	TX610	Bazette clay loam, 5 to 12 percent slopes	0.000	0.119	0.000	0.000	0.000	0.132	0.119	0.000	0.000
Gulf Coast	TX	Hopkins	203.144	203.247	0.104	TX610	Crockett loam, 1 to 3 percent slopes	0.000	0.000	0.104	0.000	0.000	0.104	0.000	0.000	0.000
Gulf Coast	TX	Hopkins	203.247	203.450	0.203	TX610	Bazette clay loam, 5 to 12 percent slopes	0.000	0.182	0.000	0.000	0.000	0.203	0.182	0.000	0.000
Gulf Coast	TX	Hopkins	203.450	205.558	2.108	TX610	Crockett loam, 1 to 3 percent slopes	0.000	0.000	2.108	0.000	0.000	2.108	0.000	0.000	0.000
Gulf Coast	TX	Hopkins	205.558	205.598	0.040	TX610	Annona-Raino complex	0.000	0.000	0.000	0.000	0.000	0.040	0.000	0.000	0.000
Gulf	TX	Hopkins	205.598	205.767	0.169	TX610	Nahatche soils	0.000	0.000	0.000	0.000	0.160	0.169	0.000	0.000	0.000

Appendix K – Soils by Milepost – Gulf Coast Section

Pipeline Segment		County	Beginning Milepost	Ending Milepost	Miles	Soil Series	Soil Series Name	Wind (miles)	water (miles)	Low revegetation potential (miles)	Prime Farmland (miles)	Hydric (miles)	Compaction Prone (miles)	Stony-Rocky (miles)	Shallow Bedrock (miles)	Droughty (miles)
Coast																
Gulf Coast	TX	Hopkins	205.767	206.034	0.267	TX610	Bazette clay loam, 5 to 12 percent slopes	0.000	0.240	0.000	0.000	0.000	0.267	0.240	0.000	0.000
Gulf Coast	TX	Hopkins	206.034	206.140	0.106	TX610	Crockett loam, 2 to 5 percent slops, eroded	0.000	0.000	0.106	0.000	0.000	0.106	0.000	0.000	0.000
Gulf Coast	TX	Hopkins	206.140	206.178	0.039	TX610	Crockett loam, 1 to 3 percent slopes	0.000	0.000	0.039	0.000	0.000	0.039	0.000	0.000	0.000
Gulf Coast	TX	Hopkins	206.178	206.207	0.028	TX610	Crockett loam, 2 to 5 percent slops, eroded	0.000	0.000	0.028	0.000	0.000	0.028	0.000	0.000	0.000
Gulf Coast	TX	Hopkins	206.207	206.537	0.330	TX610	Crockett loam, 3 to 5 percent slopes	0.000	0.000	0.330	0.000	0.000	0.330	0.000	0.000	0.000
Gulf Coast	TX	Hopkins	206.537	207.065	0.528	TX610	Crockett loam, 1 to 3 percent slopes	0.000	0.000	0.528	0.000	0.000	0.528	0.000	0.000	0.000
Gulf Coast	TX	Hopkins	207.065	207.091	0.025	TX610	Crockett loam, 3 to 5 percent slopes	0.000	0.000	0.025	0.000	0.000	0.025	0.000	0.000	0.000
Gulf Coast	TX	Hopkins	207.091	207.304	0.213	TX610	Crockett loam, 1 to 3 percent slopes	0.000	0.000	0.213	0.000	0.000	0.213	0.000	0.000	0.000
Gulf Coast	TX	Hopkins	207.304	207.445	0.141	TX610	Crockett loam, 2 to 5 percent slops, eroded	0.000	0.000	0.141	0.000	0.000	0.141	0.000	0.000	0.000
Gulf Coast	TX	Hopkins	207.445	207.576	0.131	TX610	Crockett loam, 1 to 3 percent slopes	0.000	0.000	0.131	0.000	0.000	0.131	0.000	0.000	0.000
Gulf Coast	TX	Hopkins	207.576	207.685	0.109	TX610	Crockett loam, 2 to 5 percent slops, eroded	0.000	0.000	0.109	0.000	0.000	0.109	0.000	0.000	0.000
Gulf Coast	TX	Hopkins	207.685	208.028	0.343	TX610	Crockett loam, 1 to 3 percent slopes	0.000	0.000	0.343	0.000	0.000	0.343	0.000	0.000	0.000
Gulf Coast	TX	Hopkins	208.028	208.091	0.063	TX610	Crockett loam, 2 to 5 percent slops, eroded	0.000	0.000	0.063	0.000	0.000	0.063	0.000	0.000	0.000
Gulf Coast	TX	Hopkins	208.091	208.453	0.362	TX610	Crockett loam, 1 to 3 percent slopes	0.000	0.000	0.362	0.000	0.000	0.362	0.000	0.000	0.000
Gulf Coast	TX	Hopkins	208.453	208.554	0.101	TX610	Crockett loam, 3 to 5 percent slopes	0.000	0.000	0.101	0.000	0.000	0.101	0.000	0.000	0.000
Gulf Coast	TX	Hopkins	208.554	208.867	0.313	TX610	Crockett loam, 1 to 3 percent slopes	0.000	0.000	0.313	0.000	0.000	0.313	0.000	0.000	0.000
Gulf Coast	TX	Hopkins	208.867	208.903	0.036	TX610	Crockett loam, 3 to 5 percent slopes	0.000	0.000	0.036	0.000	0.000	0.036	0.000	0.000	0.000
Gulf Coast	TX	Hopkins	208.903	209.235	0.332	TX610	Crockett loam, 1 to 3 percent slopes	0.000	0.000	0.332	0.000	0.000	0.332	0.000	0.000	0.000
Gulf Coast	TX	Hopkins	209.235	209.267	0.032	TX610	Crockett loam, 2 to 5 percent slops, eroded	0.000	0.000	0.032	0.000	0.000	0.032	0.000	0.000	0.000
Gulf Coast	TX	Hopkins	209.267	209.324	0.057	TX610	Woodtell loam, 2 to 5 percent slopes	0.000	0.000	0.000	0.000	0.000	0.057	0.000	0.000	0.000
Gulf Coast	TX	Hopkins	209.324	209.462	0.138	TX610	Nahatche soils	0.000	0.000	0.000	0.000	0.131	0.138	0.000	0.000	0.000
Gulf	TX	Hopkins	209.462	209.529	0.067	TX610	Woodtell loam, 2 to 5 percent slopes	0.000	0.000	0.000	0.000	0.000	0.067	0.000	0.000	0.000

Appendix K – Soils by Milepost – Gulf Coast Section

Pipeline Segment		County	Beginning Milepost	Ending Milepost	Miles	Soil Series	Soil Series Name	Wind (miles)	water (miles)	Low revegetation potential (miles)	Prime Farmland (miles)	Hydric (miles)	Compaction Prone (miles)	Stony-Rocky (miles)	Shallow Bedrock (miles)	Droughty (miles)
Coast																
Gulf Coast	TX	Hopkins	209.529	209.959	0.430	TX610	Wilson clay loam, 0 to 2 percent slopes	0.000	0.000	0.430	0.000	0.000	0.430	0.000	0.000	0.000
Gulf Coast	TX	Hopkins	209.959	210.117	0.158	TX610	Lufkin-Raino complex	0.000	0.000	0.095	0.000	0.000	0.158	0.000	0.000	0.000
Gulf Coast	TX	Hopkins	210.117	210.301	0.185	TX610	Woodtell loam, 2 to 5 percent slopes	0.000	0.000	0.000	0.000	0.000	0.185	0.000	0.000	0.000
Gulf Coast	TX	Hopkins	210.301	210.770	0.468	TX610	Annona-Raino complex	0.000	0.000	0.000	0.000	0.000	0.468	0.000	0.000	0.000
Gulf Coast	TX	Hopkins	210.770	210.921	0.152	TX610	Woodtell loam, 5 to 12 percent slopes	0.000	0.136	0.000	0.000	0.015	0.152	0.000	0.000	0.000
Gulf Coast	TX	Hopkins	210.921	211.314	0.393	TX610	Nahatche soils	0.000	0.000	0.000	0.000	0.373	0.393	0.000	0.000	0.000
Gulf Coast	TX	Hopkins	211.314	211.397	0.084	TX610	Woodtell loam, 5 to 12 percent slopes	0.000	0.075	0.000	0.000	0.008	0.084	0.000	0.000	0.000
Gulf Coast	TX	Hopkins	211.397	211.488	0.090	TX610	Woodtell loam, 2 to 5 percent slopes	0.000	0.000	0.000	0.000	0.000	0.090	0.000	0.000	0.000
Gulf Coast	TX	Hopkins	211.488	211.580	0.093	TX610	Woodtell loam, 5 to 12 percent slopes	0.000	0.083	0.000	0.000	0.009	0.093	0.000	0.000	0.000
Gulf Coast	TX	Hopkins	211.580	212.971	1.391	TX610	Nahatche soils	0.000	0.000	0.000	0.000	1.322	1.391	0.000	0.000	0.000
Gulf Coast	TX	Hopkins	212.971	213.099	0.127	TX610	Woodtell loam, 5 to 12 percent slopes	0.000	0.114	0.000	0.000	0.013	0.127	0.000	0.000	0.000
Gulf Coast	TX	Hopkins	213.099	213.265	0.167	TX610	Crockett loam, 2 to 5 percent slops, eroded	0.000	0.000	0.167	0.000	0.000	0.167	0.000	0.000	0.000
Gulf Coast	TX	Hopkins	213.265	213.323	0.058	TX610	Nahatche soils	0.000	0.000	0.000	0.000	0.055	0.058	0.000	0.000	0.000
Gulf Coast	TX	Hopkins	213.323	213.406	0.083	TX610	Crockett loam, 3 to 5 percent slopes	0.000	0.000	0.083	0.000	0.000	0.083	0.000	0.000	0.000
Gulf Coast	TX	Hopkins	213.406	214.431	1.025	TX610	Crockett loam, 1 to 3 percent slopes	0.000	0.000	1.025	0.000	0.000	1.025	0.000	0.000	0.000
Gulf Coast	TX	Hopkins	214.431	214.493	0.062	TX610	Crockett loam, 2 to 5 percent slops, eroded	0.000	0.000	0.062	0.000	0.000	0.062	0.000	0.000	0.000
Gulf Coast	TX	Hopkins	214.493	215.003	0.510	TX610	Crockett loam, 1 to 3 percent slopes	0.000	0.000	0.510	0.000	0.000	0.510	0.000	0.000	0.000
Gulf Coast	TX	Hopkins	215.003	215.069	0.067	TX610	Freestone fine sandy loam, 1 to 3 percent slopes	0.000	0.000	0.000	0.067	0.000	0.067	0.000	0.000	0.000
Gulf Coast	TX	Hopkins	215.069	215.475	0.406	TX610	Woodtell loam, 2 to 5 percent slopes	0.000	0.000	0.000	0.000	0.000	0.406	0.000	0.000	0.000
Gulf Coast	TX	Hopkins	215.475	215.733	0.258	TX610	Nahatche soils	0.000	0.000	0.000	0.000	0.245	0.258	0.000	0.000	0.000
Gulf Coast	TX	Hopkins	215.733	215.842	0.108	TX610	Crockett loam, 2 to 5 percent slops, eroded	0.000	0.000	0.108	0.000	0.000	0.108	0.000	0.000	0.000
Gulf	TX	Hopkins	215.842	216.820	0.978	TX610	Nahatche soils	0.000	0.000	0.000	0.000	0.929	0.978	0.000	0.000	0.000

Appendix K – Soils by Milepost – Gulf Coast Section

Pipeline Segment		County	Beginning Milepost	Ending Milepost	Miles	Soil Series	Soil Series Name	Wind (miles)	water (miles)	Low revegetation potential (miles)	Prime Farmland (miles)	Hydric (miles)	Compaction Prone (miles)	Stony-Rocky (miles)	Shallow Bedrock (miles)	Droughty (miles)
Coast																
Gulf Coast	TX	Hopkins	216.820	217.118	0.298	TX610	Bernaldo fine sandy loam, 1 to 3 percent slopes	0.000	0.000	0.000	0.298	0.000	0.298	0.000	0.000	0.000
Gulf Coast	TX	Hopkins	217.118	217.342	0.224	TX610	Nahatche soils	0.000	0.000	0.000	0.000	0.212	0.224	0.000	0.000	0.000
Gulf Coast	TX	Hopkins	217.342	217.420	0.078	TX610	Woodtell loam, 5 to 12 percent slopes	0.000	0.070	0.000	0.000	0.008	0.078	0.000	0.000	0.000
Gulf Coast	TX	Hopkins	217.420	217.568	0.148	TX610	Wolfpen loamy fine sand, 1 to 5 percent slopes	0.000	0.000	0.000	0.000	0.000	0.148	0.000	0.000	0.148
Gulf Coast	TX	Hopkins	217.568	217.608	0.040	TX610	Freestone fine sandy loam, 1 to 3 percent slopes	0.000	0.000	0.000	0.040	0.000	0.040	0.000	0.000	0.000
Gulf Coast	TX	Hopkins	217.608	217.664	0.056	TX610	Woodtell loam, 5 to 12 percent slopes	0.000	0.050	0.000	0.000	0.006	0.056	0.000	0.000	0.000
Gulf Coast	TX	Hopkins	217.664	217.745	0.081	TX610	Wolfpen loamy fine sand, 1 to 5 percent slopes	0.000	0.000	0.000	0.000	0.000	0.081	0.000	0.000	0.081
Gulf Coast	TX	Hopkins	217.745	217.821	0.076	TX610	Woodtell loam, 5 to 12 percent slopes	0.000	0.069	0.000	0.000	0.008	0.076	0.000	0.000	0.000
Gulf Coast	TX	Hopkins	217.821	217.929	0.108	TX610	Freestone fine sandy loam, 1 to 3 percent slopes	0.000	0.000	0.000	0.108	0.000	0.108	0.000	0.000	0.000
Gulf Coast	TX	Hopkins	217.929	218.033	0.104	TX610	Woodtell loam, 2 to 5 percent slopes	0.000	0.000	0.000	0.000	0.000	0.104	0.000	0.000	0.000
Gulf Coast	TX	Hopkins	218.033	218.142	0.109	TX610	Freestone fine sandy loam, 1 to 3 percent slopes	0.000	0.000	0.000	0.109	0.000	0.109	0.000	0.000	0.000
Gulf Coast	TX	Hopkins	218.142	218.202	0.061	TX610	Woodtell loam, 2 to 5 percent slopes	0.000	0.000	0.000	0.000	0.000	0.061	0.000	0.000	0.000
Gulf Coast	TX	Hopkins	218.202	218.631	0.428	TX610	Freestone fine sandy loam, 1 to 3 percent slopes	0.000	0.000	0.000	0.428	0.000	0.428	0.000	0.000	0.000
Gulf Coast	TX	Hopkins	218.631	218.806	0.176	TX610	Lufkin-Raino complex	0.000	0.000	0.105	0.000	0.000	0.176	0.000	0.000	0.000
Gulf Coast	TX	Hopkins	218.806	219.255	0.448	TX610	Freestone fine sandy loam, 1 to 3 percent slopes	0.000	0.000	0.000	0.448	0.000	0.448	0.000	0.000	0.000
Gulf Coast	TX	Hopkins	219.255	219.378	0.124	TX610	Lufkin-Raino complex	0.000	0.000	0.074	0.000	0.000	0.124	0.000	0.000	0.000
Gulf Coast	TX	Hopkins	219.378	219.674	0.296	TX610	Wolfpen loamy fine sand, 1 to 5 percent slopes	0.000	0.000	0.000	0.000	0.000	0.296	0.000	0.000	0.296
Gulf Coast	TX	Hopkins	219.674	219.788	0.113	TX610	Woodtell loam, 2 to 5 percent slopes	0.000	0.000	0.000	0.000	0.000	0.113	0.000	0.000	0.000
Gulf Coast	TX	Hopkins	219.788	219.934	0.147	TX610	Nahatche soils	0.000	0.000	0.000	0.000	0.139	0.147	0.000	0.000	0.000
Gulf Coast	TX	Hopkins	219.934	219.988	0.054	TX610	Woodtell loam, 5 to 12 percent slopes	0.000	0.049	0.000	0.000	0.005	0.054	0.000	0.000	0.000
Gulf Coast	TX	Hopkins	219.988	220.161	0.172	TX610	Woodtell loam, 2 to 5 percent slopes	0.000	0.000	0.000	0.000	0.000	0.172	0.000	0.000	0.000
Gulf	TX	Hopkins	220.161	220.429	0.269	TX610	Freestone fine sandy loam, 1 to 3 percent slopes	0.000	0.000	0.000	0.269	0.000	0.269	0.000	0.000	0.000

Appendix K – Soils by Milepost – Gulf Coast Section

Pipeline Segment		County	Beginning Milepost	Ending Milepost	Miles	Soil Series	Soil Series Name	Wind (miles)	water (miles)	Low revegetation potential (miles)	Prime Farmland (miles)	Hydric (miles)	Compaction Prone (miles)	Stony-Rocky (miles)	Shallow Bedrock (miles)	Droughty (miles)
Coast																
Gulf Coast	TX	Hopkins	220.429	220.796	0.366	TX610	Woodtell loam, 2 to 5 percent slopes	0.000	0.000	0.000	0.000	0.000	0.366	0.000	0.000	0.000
Gulf Coast	TX	Hopkins	220.796	220.841	0.045	TX610	Freestone fine sandy loam, 1 to 3 percent slopes	0.000	0.000	0.000	0.045	0.000	0.045	0.000	0.000	0.000
Gulf Coast	TX	Hopkins	220.841	221.260	0.419	TX610	Woodtell loam, 2 to 5 percent slopes	0.000	0.000	0.000	0.000	0.000	0.419	0.000	0.000	0.000
Gulf Coast	TX	Hopkins	221.260	221.328	0.068	TX610	Wolfpen loamy fine sand, 1 to 5 percent slopes	0.000	0.000	0.000	0.000	0.000	0.068	0.000	0.000	0.068
Gulf Coast	TX	Hopkins	221.328	221.395	0.067	TX610	Woodtell loam, 2 to 5 percent slopes	0.000	0.000	0.000	0.000	0.000	0.067	0.000	0.000	0.000
Gulf Coast	TX	Hopkins	221.395	221.478	0.083	TX610	Wolfpen loamy fine sand, 1 to 5 percent slopes	0.000	0.000	0.000	0.000	0.000	0.083	0.000	0.000	0.083
Gulf Coast	TX	Hopkins	221.478	221.525	0.047	TX610	Woodtell loam, 5 to 12 percent slopes	0.000	0.042	0.000	0.000	0.005	0.047	0.000	0.000	0.000
Gulf Coast	TX	Hopkins	221.525	221.578	0.053	TX610	Freestone fine sandy loam, 1 to 3 percent slopes	0.000	0.000	0.000	0.053	0.000	0.053	0.000	0.000	0.000
Gulf Coast	TX	Franklin	221.578	221.619	0.040	TX603	Millboro-Boro silty clays, 6 to 9 percent slopes, PA2	0.000	0.000	0.000	0.040	0.000	0.040	0.000	0.000	0.000
Gulf Coast	TX	Franklin	221.619	221.762	0.144	TX603	Millboro-Boro silty clays, 6 to 9 percent slopes, PA2	0.000	0.122	0.000	0.000	0.000	0.144	0.000	0.122	0.000
Gulf Coast	TX	Franklin	221.762	221.826	0.063	TX603	Millboro-Boro silty clays, 6 to 9 percent slopes, PA2	0.000	0.000	0.000	0.000	0.000	0.063	0.000	0.057	0.000
Gulf Coast	TX	Franklin	221.826	221.967	0.142	TX603	Millboro-Boro silty clays, 6 to 9 percent slopes, PA2	0.000	0.000	0.000	0.142	0.000	0.142	0.000	0.000	0.000
Gulf Coast	TX	Franklin	221.967	221.975	0.008	TX603	Millboro-Boro silty clays, 6 to 9 percent slopes, PA2	0.000	0.000	0.000	0.000	0.000	0.008	0.000	0.000	0.007
Gulf Coast	TX	Franklin	221.975	222.033	0.058	TX603	Millboro-Boro silty clays, 6 to 9 percent slopes, PA2	0.000	0.000	0.000	0.000	0.006	0.058	0.000	0.000	0.000
Gulf Coast	TX	Franklin	222.033	222.172	0.139	TX603	Millboro-Boro silty clays, 6 to 9 percent slopes, PA2	0.000	0.000	0.000	0.000	0.000	0.139	0.000	0.000	0.111
Gulf Coast	TX	Franklin	222.172	222.331	0.159	TX603	Millboro-Boro silty clays, 6 to 9 percent slopes, PA2	0.000	0.000	0.000	0.000	0.000	0.159	0.000	0.000	0.143
Gulf Coast	TX	Franklin	222.331	222.395	0.064	TX603	Millboro-Boro silty clays, 6 to 9 percent slopes, PA2	0.000	0.000	0.000	0.064	0.000	0.064	0.000	0.000	0.000
Gulf Coast	TX	Franklin	222.395	222.588	0.193	TX603	Millboro-Boro silty clays, 6 to 9 percent slopes, PA2	0.000	0.000	0.000	0.000	0.000	0.193	0.000	0.000	0.174
Gulf Coast	TX	Franklin	222.588	223.952	1.364	TX603	Millboro-Boro silty clays, 6 to 9 percent slopes, PA2	0.000	0.000	0.000	0.000	0.000	1.364	0.000	1.227	0.000
Gulf Coast	TX	Franklin	223.952	224.291	0.339	TX603	Millboro-Boro silty clays, 6 to 9 percent slopes, PA2	0.000	0.288	0.000	0.000	0.000	0.339	0.000	0.288	0.000
Gulf Coast	TX	Franklin	224.291	224.406	0.115	TX603	Millboro-Boro silty clays, 6 to 9 percent slopes, PA2	0.000	0.097	0.000	0.000	0.000	0.115	0.000	0.097	0.000
Gulf	TX	Franklin	224.406	224.641	0.235	TX603	Millboro-Boro silty clays, 6 to 9 percent slopes, PA2	0.000	0.000	0.000	0.000	0.000	0.235	0.000	0.212	0.000

Appendix K – Soils by Milepost – Gulf Coast Section

Pipeline Segment		County	Beginning Milepost	Ending Milepost	Miles	Soil Series	Soil Series Name	Wind (miles)	water (miles)	Low revegetation potential (miles)	Prime Farmland (miles)	Hydric (miles)	Compaction Prone (miles)	Stony-Rocky (miles)	Shallow Bedrock (miles)	Droughty (miles)
Coast																
Gulf Coast	TX	Franklin	224.641	224.788	0.147	TX603	Millboro-Boro silty clays, 6 to 9 percent slopes, PA2	0.000	0.125	0.000	0.000	0.000	0.147	0.000	0.125	0.000
Gulf Coast	TX	Franklin	224.788	224.815	0.027	TX603	Millboro-Boro silty clays, 6 to 9 percent slopes, PA2	0.000	0.000	0.000	0.000	0.000	0.027	0.000	0.000	0.022
Gulf Coast	TX	Franklin	224.815	224.838	0.023	TX603	Millboro-Boro silty clays, 6 to 9 percent slopes, PA2	0.000	0.020	0.000	0.000	0.000	0.023	0.000	0.020	0.000
Gulf Coast	TX	Franklin	224.838	224.854	0.016	TX603	Millboro-Boro silty clays, 6 to 9 percent slopes, PA2	0.000	0.000	0.000	0.000	0.000	0.016	0.000	0.000	0.013
Gulf Coast	TX	Franklin	224.854	224.909	0.055	TX603	Millboro-Boro silty clays, 6 to 9 percent slopes, PA2	0.000	0.000	0.049	0.000	0.000	0.055	0.000	0.000	0.000
Gulf Coast	TX	Franklin	224.909	224.956	0.047	TX603	Millboro-Boro silty clays, 6 to 9 percent slopes, PA2	0.000	0.040	0.000	0.000	0.000	0.047	0.000	0.040	0.000
Gulf Coast	TX	Franklin	224.956	225.017	0.061	TX603	Millboro-Boro silty clays, 6 to 9 percent slopes, PA2	0.000	0.000	0.000	0.000	0.000	0.061	0.000	0.000	0.055
Gulf Coast	TX	Franklin	225.017	225.056	0.039	TX603	Millboro-Boro silty clays, 6 to 9 percent slopes, PA2	0.000	0.033	0.000	0.000	0.000	0.039	0.000	0.033	0.000
Gulf Coast	TX	Franklin	225.056	225.215	0.159	TX603	Millboro-Boro silty clays, 6 to 9 percent slopes, PA2	0.000	0.000	0.000	0.159	0.000	0.159	0.000	0.000	0.000
Gulf Coast	TX	Franklin	225.215	225.328	0.114	TX603	Millboro-Boro silty clays, 6 to 9 percent slopes, PA2	0.000	0.000	0.000	0.000	0.000	0.114	0.000	0.000	0.091
Gulf Coast	TX	Franklin	225.328	225.415	0.087	TX603	Millboro-Boro silty clays, 6 to 9 percent slopes, PA2	0.000	0.000	0.000	0.000	0.000	0.087	0.000	0.000	0.078
Gulf Coast	TX	Franklin	225.415	225.700	0.284	TX603	Millboro-Boro silty clays, 6 to 9 percent slopes, PA2	0.000	0.000	0.000	0.000	0.000	0.284	0.000	0.000	0.256
Gulf Coast	TX	Franklin	225.700	226.171	0.472	TX603	Millboro-Boro silty clays, 6 to 9 percent slopes, PA2	0.000	0.000	0.000	0.000	0.047	0.472	0.000	0.000	0.000
Gulf Coast	TX	Franklin	226.171	226.837	0.666	TX603	Millboro-Boro silty clays, 6 to 9 percent slopes, PA2	0.000	0.566	0.000	0.000	0.000	0.666	0.000	0.566	0.000
Gulf Coast	TX	Franklin	226.837	227.424	0.587	TX603	Millboro-Boro silty clays, 6 to 9 percent slopes, PA2	0.000	0.000	0.000	0.000	0.470	0.587	0.000	0.000	0.000
Gulf Coast	TX	Franklin	227.424	227.562	0.138	TX603	Millboro-Boro silty clays, 6 to 9 percent slopes, PA2	0.000	0.000	0.000	0.000	0.014	0.138	0.000	0.000	0.000
Gulf Coast	TX	Franklin	227.562	227.577	0.015	TX603	Millboro-Boro silty clays, 6 to 9 percent slopes, PA2	0.000	0.000	0.000	0.000	0.000	0.015	0.000	0.000	0.012
Gulf Coast	TX	Franklin	227.577	227.712	0.135	TX603	Millboro-Boro silty clays, 6 to 9 percent slopes, PA2	0.000	0.000	0.000	0.000	0.014	0.135	0.000	0.000	0.000
Gulf Coast	TX	Franklin	227.712	227.806	0.094	TX603	Millboro-Boro silty clays, 6 to 9 percent slopes, PA2	0.000	0.000	0.000	0.000	0.000	0.094	0.000	0.000	0.080
Gulf Coast	TX	Franklin	227.806	228.310	0.504	TX603	Millboro-Boro silty clays, 6 to 9 percent slopes, PA2	0.000	0.000	0.000	0.000	0.000	0.504	0.000	0.000	0.403
Gulf Coast	TX	Franklin	228.310	228.583	0.273	TX603	Millboro-Boro silty clays, 6 to 9 percent slopes, PA2	0.000	0.232	0.000	0.000	0.000	0.273	0.000	0.232	0.000
Gulf	TX	Franklin	228.583	228.657	0.074	TX603	Millboro-Boro silty clays, 6 to 9 percent slopes, PA2	0.000	0.000	0.000	0.000	0.000	0.074	0.000	0.059	0.000

Appendix K – Soils by Milepost – Gulf Coast Section

Pipeline Segment		County	Beginning Milepost	Ending Milepost	Miles	Soil Series	Soil Series Name	Wind (miles)	water (miles)	Low revegetation potential (miles)	Prime Farmland (miles)	Hydric (miles)	Compaction Prone (miles)	Stony-Rocky (miles)	Shallow Bedrock (miles)	Droughty (miles)
Coast																
Gulf Coast	TX	Franklin	228.657	229.149	0.492	TX603	Millboro-Boro silty clays, 6 to 9 percent slopes, PA2	0.000	0.418	0.000	0.000	0.000	0.492	0.000	0.418	0.000
Gulf Coast	TX	Franklin	229.149	229.447	0.297	TX603	Millboro-Boro silty clays, 6 to 9 percent slopes, PA2	0.000	0.000	0.000	0.000	0.238	0.297	0.000	0.000	0.000
Gulf Coast	TX	Franklin	229.447	229.629	0.183	TX603	Millboro-Boro silty clays, 6 to 9 percent slopes, PA2	0.000	0.000	0.000	0.000	0.000	0.183	0.000	0.000	0.146
Gulf Coast	TX	Franklin	229.629	229.696	0.067	TX603	Millboro-Boro silty clays, 6 to 9 percent slopes, PA2	0.000	0.000	0.000	0.000	0.000	0.067	0.000	0.000	0.057
Gulf Coast	TX	Franklin	229.696	229.950	0.254	TX603	Millboro-Boro silty clays, 6 to 9 percent slopes, PA2	0.000	0.000	0.000	0.000	0.000	0.254	0.000	0.000	0.204
Gulf Coast	TX	Franklin	229.950	230.013	0.062	TX603	Millboro-Boro silty clays, 6 to 9 percent slopes, PA2	0.000	0.000	0.000	0.000	0.000	0.062	0.000	0.000	0.050
Gulf Coast	TX	Franklin	230.013	230.110	0.098	TX603	Millboro-Boro silty clays, 6 to 9 percent slopes, PA2	0.000	0.000	0.000	0.000	0.000	0.098	0.000	0.000	0.083
Gulf Coast	TX	Franklin	230.110	230.256	0.146	TX603	Millboro-Boro silty clays, 6 to 9 percent slopes, PA2	0.000	0.000	0.000	0.000	0.000	0.146	0.124	0.124	0.000
Gulf Coast	TX	Franklin	230.256	230.375	0.119	TX603	Millboro-Boro silty clays, 6 to 9 percent slopes, PA2	0.000	0.101	0.000	0.000	0.000	0.119	0.000	0.101	0.000
Gulf Coast	TX	Franklin	230.375	230.570	0.195	TX603	Millboro-Boro silty clays, 6 to 9 percent slopes, PA2	0.000	0.000	0.000	0.000	0.019	0.195	0.000	0.000	0.000
Gulf Coast	TX	Franklin	230.570	230.593	0.023	TX603	Millboro-Boro silty clays, 6 to 9 percent slopes, PA2	0.000	0.000	0.000	0.000	0.000	0.023	0.000	0.018	0.000
Gulf Coast	TX	Franklin	230.593	230.781	0.188	TX603	Millboro-Boro silty clays, 6 to 9 percent slopes, PA2	0.000	0.000	0.000	0.000	0.019	0.188	0.000	0.000	0.000
Gulf Coast	TX	Franklin	230.781	231.051	0.270	TX603	Millboro-Boro silty clays, 6 to 9 percent slopes, PA2	0.000	0.229	0.000	0.000	0.000	0.270	0.000	0.229	0.000
Gulf Coast	TX	Franklin	231.051	231.228	0.178	TX603	Millboro-Boro silty clays, 6 to 9 percent slopes, PA2	0.000	0.000	0.000	0.178	0.000	0.178	0.000	0.000	0.000
Gulf Coast	TX	Franklin	231.228	231.362	0.134	TX603	Millboro-Boro silty clays, 6 to 9 percent slopes, PA2	0.000	0.000	0.000	0.000	0.000	0.134	0.000	0.000	0.107
Gulf Coast	TX	Franklin	231.362	231.465	0.103	TX603	Millboro-Boro silty clays, 6 to 9 percent slopes, PA2	0.000	0.087	0.000	0.000	0.000	0.103	0.000	0.087	0.000
Gulf Coast	TX	Franklin	231.465	231.599	0.134	TX603	Millboro-Boro silty clays, 6 to 9 percent slopes, PA2	0.000	0.000	0.000	0.000	0.107	0.134	0.000	0.000	0.000
Gulf Coast	TX	Franklin	231.599	231.663	0.064	TX603	Millboro-Boro silty clays, 6 to 9 percent slopes, PA2	0.000	0.054	0.000	0.000	0.000	0.064	0.000	0.054	0.000
Gulf Coast	TX	Franklin	231.663	231.803	0.140	TX603	Millboro-Boro silty clays, 6 to 9 percent slopes, PA2	0.000	0.000	0.000	0.000	0.112	0.140	0.000	0.000	0.000
Gulf Coast	TX	Franklin	231.803	231.833	0.030	TX603	Millboro-Boro silty clays, 6 to 9 percent slopes, PA2	0.000	0.025	0.000	0.000	0.000	0.030	0.000	0.025	0.000
Gulf Coast	TX	Franklin	231.833	231.901	0.068	TX603	Millboro-Boro silty clays, 6 to 9 percent slopes, PA2	0.000	0.000	0.000	0.000	0.055	0.068	0.000	0.000	0.000
Gulf	TX	Franklin	231.901	231.941	0.040	TX603	Millboro-Boro silty clays, 6 to 9 percent slopes, PA2	0.000	0.034	0.000	0.000	0.000	0.040	0.000	0.034	0.000

Appendix K – Soils by Milepost – Gulf Coast Section

Pipeline Segment		County	Beginning Milepost	Ending Milepost	Miles	Soil Series	Soil Series Name	Wind (miles)	water (miles)	Low revegetation potential (miles)	Prime Farmland (miles)	Hydric (miles)	Compaction Prone (miles)	Stony-Rocky (miles)	Shallow Bedrock (miles)	Droughty (miles)
Coast																
Gulf Coast	TX	Franklin	231.941	232.118	0.177	TX603	Millboro-Boro silty clays, 6 to 9 percent slopes, PA2	0.000	0.000	0.000	0.177	0.000	0.177	0.000	0.000	0.000
Gulf Coast	TX	Wood	232.118	232.234	0.116	TX499	Millboro-Boro silty clays, 6 to 9 percent slopes, PA2	0.000	0.000	0.000	0.116	0.000	0.116	0.000	0.000	0.000
Gulf Coast	TX	Wood	232.234	232.422	0.188	TX499	Millboro-Boro silty clays, 6 to 9 percent slopes, PA2	0.000	0.000	0.000	0.000	0.000	0.188	0.150	0.150	0.000
Gulf Coast	TX	Wood	232.422	232.595	0.173	TX499	Millboro-Boro silty clays, 6 to 9 percent slopes, PA2	0.000	0.000	0.000	0.173	0.000	0.173	0.000	0.000	0.000
Gulf Coast	TX	Wood	232.595	232.815	0.220	TX499	Millboro-Boro silty clays, 6 to 9 percent slopes, PA2	0.000	0.000	0.000	0.220	0.000	0.220	0.000	0.000	0.000
Gulf Coast	TX	Wood	232.815	233.058	0.243	TX499	Millboro-Boro silty clays, 6 to 9 percent slopes, PA2	0.000	0.000	0.000	0.000	0.170	0.243	0.000	0.000	0.000
Gulf Coast	TX	Wood	233.058	233.322	0.264	TX499	Millboro-Boro silty clays, 6 to 9 percent slopes, PA2	0.000	0.211	0.000	0.000	0.000	0.264	0.211	0.211	0.000
Gulf Coast	TX	Wood	233.322	233.390	0.068	TX499	Millboro-Boro silty clays, 6 to 9 percent slopes, PA2	0.000	0.000	0.000	0.000	0.000	0.068	0.000	0.000	0.000
Gulf Coast	TX	Wood	233.390	233.442	0.053	TX499	Millboro-Boro silty clays, 6 to 9 percent slopes, PA2	0.000	0.042	0.000	0.000	0.000	0.053	0.000	0.042	0.000
Gulf Coast	TX	Wood	233.442	233.625	0.183	TX499	Millboro-Boro silty clays, 6 to 9 percent slopes, PA2	0.000	0.000	0.000	0.183	0.000	0.183	0.000	0.000	0.000
Gulf Coast	TX	Wood	233.625	233.699	0.073	TX499	Millboro-Boro silty clays, 6 to 9 percent slopes, PA2	0.000	0.000	0.000	0.073	0.000	0.073	0.000	0.000	0.000
Gulf Coast	TX	Wood	233.699	233.839	0.141	TX499	Millboro-Boro silty clays, 6 to 9 percent slopes, PA2	0.000	0.113	0.000	0.000	0.000	0.141	0.000	0.113	0.000
Gulf Coast	TX	Wood	233.839	233.881	0.042	TX499	Millboro-Boro silty clays, 6 to 9 percent slopes, PA2	0.000	0.000	0.000	0.042	0.000	0.042	0.000	0.000	0.000
Gulf Coast	TX	Wood	233.881	233.950	0.069	TX499	Millboro-Boro silty clays, 6 to 9 percent slopes, PA2	0.000	0.000	0.000	0.000	0.000	0.069	0.000	0.056	0.000
Gulf Coast	TX	Wood	233.950	234.147	0.196	TX499	Millboro-Boro silty clays, 6 to 9 percent slopes, PA2	0.000	0.000	0.000	0.196	0.000	0.196	0.000	0.000	0.000
Gulf Coast	TX	Wood	234.147	234.240	0.093	TX499	Millboro-Boro silty clays, 6 to 9 percent slopes, PA2	0.000	0.075	0.000	0.000	0.000	0.093	0.000	0.075	0.000
Gulf Coast	TX	Wood	234.240	234.333	0.093	TX499	Millboro-Boro silty clays, 6 to 9 percent slopes, PA2	0.000	0.000	0.000	0.000	0.065	0.093	0.000	0.000	0.000
Gulf Coast	TX	Wood	234.333	234.430	0.097	TX499	Millboro-Boro silty clays, 6 to 9 percent slopes, PA2	0.000	0.078	0.000	0.000	0.000	0.097	0.000	0.078	0.000
Gulf Coast	TX	Wood	234.430	234.526	0.096	TX499	Millboro-Boro silty clays, 6 to 9 percent slopes, PA2	0.000	0.000	0.000	0.000	0.000	0.096	0.000	0.000	0.077
Gulf Coast	TX	Wood	234.526	234.697	0.171	TX499	Millboro-Boro silty clays, 6 to 9 percent slopes, PA2	0.000	0.137	0.000	0.000	0.000	0.171	0.000	0.137	0.000
Gulf Coast	TX	Wood	234.697	235.044	0.347	TX499	Millboro-Boro silty clays, 6 to 9 percent slopes, PA2	0.000	0.000	0.000	0.000	0.000	0.347	0.000	0.000	0.277
Gulf	TX	Wood	235.044	235.254	0.210	TX499	Millboro-Boro silty clays, 6 to 9 percent slopes, PA2	0.000	0.000	0.000	0.000	0.000	0.210	0.000	0.000	0.168

Appendix K – Soils by Milepost – Gulf Coast Section

Pipeline Segment		County	Beginning Milepost	Ending Milepost	Miles	Soil Series	Soil Series Name	Wind (miles)	water (miles)	Low revegetation potential (miles)	Prime Farmland (miles)	Hydric (miles)	Compaction Prone (miles)	Stony-Rocky (miles)	Shallow Bedrock (miles)	Droughty (miles)
Coast																
Gulf Coast	TX	Wood	235.254	235.324	0.070	TX499	Millboro-Boro silty clays, 6 to 9 percent slopes, PA2	0.000	0.000	0.000	0.000	0.000	0.070	0.000	0.000	0.056
Gulf Coast	TX	Wood	235.324	235.421	0.097	TX499	Millboro-Boro silty clays, 6 to 9 percent slopes, PA2	0.000	0.078	0.000	0.000	0.000	0.097	0.000	0.078	0.000
Gulf Coast	TX	Wood	235.421	235.479	0.058	TX499	Millboro-Boro silty clays, 6 to 9 percent slopes, PA2	0.000	0.000	0.000	0.000	0.000	0.058	0.000	0.000	0.000
Gulf Coast	TX	Wood	235.479	235.544	0.065	TX499	Millboro-Boro silty clays, 6 to 9 percent slopes, PA2	0.000	0.052	0.000	0.000	0.000	0.065	0.000	0.052	0.000
Gulf Coast	TX	Wood	235.544	235.616	0.073	TX499	Millboro-Boro silty clays, 6 to 9 percent slopes, PA2	0.000	0.058	0.000	0.000	0.000	0.073	0.000	0.058	0.058
Gulf Coast	TX	Wood	235.616	235.687	0.070	TX499	Millboro-Boro silty clays, 6 to 9 percent slopes, PA2	0.000	0.000	0.000	0.000	0.000	0.070	0.000	0.000	0.056
Gulf Coast	TX	Wood	235.687	235.818	0.131	TX499	Millboro-Boro silty clays, 6 to 9 percent slopes, PA2	0.000	0.105	0.000	0.000	0.000	0.131	0.000	0.105	0.105
Gulf Coast	TX	Wood	235.818	235.995	0.177	TX499	Millboro-Boro silty clays, 6 to 9 percent slopes, PA2	0.000	0.000	0.000	0.000	0.000	0.177	0.000	0.000	0.142
Gulf Coast	TX	Wood	235.995	236.070	0.075	TX499	Millboro-Boro silty clays, 6 to 9 percent slopes, PA2	0.000	0.000	0.000	0.075	0.000	0.075	0.000	0.000	0.000
Gulf Coast	TX	Wood	236.070	236.204	0.135	TX499	Millboro-Boro silty clays, 6 to 9 percent slopes, PA2	0.000	0.108	0.000	0.000	0.000	0.135	0.108	0.108	0.000
Gulf Coast	TX	Wood	236.204	236.669	0.464	TX499	Millboro-Boro silty clays, 6 to 9 percent slopes, PA2	0.000	0.000	0.000	0.000	0.000	0.464	0.000	0.000	0.371
Gulf Coast	TX	Wood	236.669	236.723	0.055	TX499	Millboro-Boro silty clays, 6 to 9 percent slopes, PA2	0.000	0.000	0.000	0.000	0.000	0.055	0.044	0.044	0.000
Gulf Coast	TX	Wood	236.723	236.798	0.075	TX499	Millboro-Boro silty clays, 6 to 9 percent slopes, PA2	0.000	0.000	0.000	0.000	0.000	0.075	0.000	0.000	0.060
Gulf Coast	TX	Wood	236.798	237.011	0.213	TX499	Millboro-Boro silty clays, 6 to 9 percent slopes, PA2	0.000	0.170	0.000	0.000	0.000	0.213	0.000	0.170	0.000
Gulf Coast	TX	Wood	237.011	237.142	0.131	TX499	Millboro-Boro silty clays, 6 to 9 percent slopes, PA2	0.000	0.000	0.000	0.000	0.000	0.131	0.000	0.104	0.000
Gulf Coast	TX	Wood	237.142	237.308	0.166	TX499	Millboro-Boro silty clays, 6 to 9 percent slopes, PA2	0.000	0.133	0.000	0.000	0.000	0.166	0.000	0.133	0.000
Gulf Coast	TX	Wood	237.308	237.954	0.646	TX499	Millboro-Boro silty clays, 6 to 9 percent slopes, PA2	0.000	0.000	0.000	0.000	0.000	0.646	0.000	0.000	0.517
Gulf Coast	TX	Wood	237.954	238.230	0.276	TX499	Millboro-Boro silty clays, 6 to 9 percent slopes, PA2	0.000	0.221	0.000	0.000	0.000	0.276	0.000	0.221	0.221
Gulf Coast	TX	Wood	238.230	238.361	0.131	TX499	Millboro-Boro silty clays, 6 to 9 percent slopes, PA2	0.000	0.105	0.000	0.000	0.000	0.131	0.000	0.105	0.000
Gulf Coast	TX	Wood	238.361	238.415	0.054	TX499	Millboro-Boro silty clays, 6 to 9 percent slopes, PA2	0.000	0.000	0.000	0.000	0.038	0.054	0.000	0.000	0.000
Gulf Coast	TX	Wood	238.415	238.475	0.060	TX499	Millboro-Boro silty clays, 6 to 9 percent slopes, PA2	0.000	0.048	0.000	0.000	0.000	0.060	0.000	0.048	0.000
Gulf	TX	Wood	238.475	238.903	0.428	TX499	Millboro-Boro silty clays, 6 to 9 percent slopes, PA2	0.000	0.000	0.000	0.000	0.000	0.428	0.000	0.000	0.342

Appendix K – Soils by Milepost – Gulf Coast Section

Pipeline Segment		County	Beginning Milepost	Ending Milepost	Miles	Soil Series	Soil Series Name	Wind (miles)	water (miles)	Low revegetation potential (miles)	Prime Farmland (miles)	Hydric (miles)	Compaction Prone (miles)	Stony-Rocky (miles)	Shallow Bedrock (miles)	Droughty (miles)
Coast																
Gulf Coast	TX	Wood	238.903	238.973	0.070	TX499	Millboro-Boro silty clays, 6 to 9 percent slopes, PA2	0.000	0.000	0.000	0.000	0.000	0.070	0.000	0.000	0.056
Gulf Coast	TX	Wood	238.973	239.039	0.066	TX499	Millboro-Boro silty clays, 6 to 9 percent slopes, PA2	0.000	0.053	0.000	0.000	0.000	0.066	0.000	0.053	0.000
Gulf Coast	TX	Wood	239.039	239.250	0.211	TX499	Millboro-Boro silty clays, 6 to 9 percent slopes, PA2	0.000	0.000	0.000	0.000	0.000	0.211	0.000	0.000	0.168
Gulf Coast	TX	Wood	239.250	239.359	0.109	TX499	Millboro-Boro silty clays, 6 to 9 percent slopes, PA2	0.000	0.000	0.000	0.000	0.000	0.109	0.000	0.000	0.087
Gulf Coast	TX	Wood	239.359	239.480	0.121	TX499	Millboro-Boro silty clays, 6 to 9 percent slopes, PA2	0.000	0.000	0.000	0.000	0.000	0.121	0.000	0.000	0.097
Gulf Coast	TX	Wood	239.480	239.940	0.460	TX499	Millboro-Boro silty clays, 6 to 9 percent slopes, PA2	0.000	0.000	0.000	0.000	0.000	0.460	0.000	0.000	0.368
Gulf Coast	TX	Wood	239.940	240.150	0.209	TX499	Millboro-Boro silty clays, 6 to 9 percent slopes, PA2	0.000	0.000	0.000	0.000	0.000	0.209	0.000	0.000	0.168
Gulf Coast	TX	Wood	240.150	240.573	0.423	TX499	Millboro-Boro silty clays, 6 to 9 percent slopes, PA2	0.000	0.000	0.000	0.000	0.339	0.423	0.339	0.000	0.000
Gulf Coast	TX	Wood	240.573	240.888	0.314	TX499	Millboro-Boro silty clays, 6 to 9 percent slopes, PA2	0.000	0.000	0.000	0.000	0.000	0.314	0.000	0.000	0.252
Gulf Coast	TX	Wood	240.888	240.965	0.077	TX499	Millboro-Boro silty clays, 6 to 9 percent slopes, PA2	0.000	0.000	0.000	0.000	0.062	0.077	0.062	0.000	0.000
Gulf Coast	TX	Wood	240.965	241.019	0.054	TX499	Millboro-Boro silty clays, 6 to 9 percent slopes, PA2	0.000	0.000	0.000	0.000	0.000	0.054	0.000	0.000	0.043
Gulf Coast	TX	Wood	241.019	241.184	0.165	TX499	Millboro-Boro silty clays, 6 to 9 percent slopes, PA2	0.000	0.000	0.000	0.000	0.000	0.165	0.000	0.000	0.132
Gulf Coast	TX	Wood	241.184	241.360	0.175	TX499	Millboro-Boro silty clays, 6 to 9 percent slopes, PA2	0.000	0.000	0.000	0.000	0.000	0.175	0.000	0.000	0.140
Gulf Coast	TX	Wood	241.360	241.418	0.058	TX499	Millboro-Boro silty clays, 6 to 9 percent slopes, PA2	0.000	0.000	0.000	0.000	0.047	0.058	0.047	0.000	0.000
Gulf Coast	TX	Wood	241.418	241.468	0.050	TX499	Millboro-Boro silty clays, 6 to 9 percent slopes, PA2	0.000	0.000	0.000	0.000	0.000	0.050	0.000	0.000	0.040
Gulf Coast	TX	Wood	241.468	241.632	0.164	TX499	Millboro-Boro silty clays, 6 to 9 percent slopes, PA2	0.000	0.000	0.000	0.000	0.000	0.164	0.000	0.000	0.131
Gulf Coast	TX	Wood	241.632	241.650	0.018	TX499	Millboro-Boro silty clays, 6 to 9 percent slopes, PA2	0.000	0.000	0.000	0.000	0.000	0.018	0.000	0.000	0.015
Gulf Coast	TX	Wood	241.650	241.997	0.348	TX499	Millboro-Boro silty clays, 6 to 9 percent slopes, PA2	0.000	0.000	0.000	0.000	0.000	0.348	0.000	0.000	0.278
Gulf Coast	TX	Wood	241.997	242.007	0.010	TX499	Millboro-Boro silty clays, 6 to 9 percent slopes, PA2	0.000	0.000	0.000	0.000	0.000	0.010	0.000	0.000	0.008
Gulf Coast	TX	Wood	242.007	242.394	0.387	TX499	Millboro-Boro silty clays, 6 to 9 percent slopes, PA2	0.000	0.000	0.000	0.000	0.000	0.387	0.000	0.000	0.309
Gulf Coast	TX	Wood	242.394	242.553	0.159	TX499	Millboro-Boro silty clays, 6 to 9 percent slopes, PA2	0.000	0.000	0.000	0.000	0.000	0.159	0.000	0.000	0.128
Gulf	TX	Wood	242.553	242.623	0.070	TX499	Millboro-Boro silty clays, 6 to 9 percent slopes, PA2	0.000	0.000	0.000	0.000	0.056	0.070	0.056	0.000	0.000

Appendix K – Soils by Milepost – Gulf Coast Section

Pipeline Segment		County	Beginning Milepost	Ending Milepost	Miles	Soil Series	Soil Series Name	Wind (miles)	water (miles)	Low revegetation potential (miles)	Prime Farmland (miles)	Hydric (miles)	Compaction Prone (miles)	Stony-Rocky (miles)	Shallow Bedrock (miles)	Droughty (miles)
Coast																
Gulf Coast	TX	Wood	242.623	242.685	0.062	TX499	Millboro-Boro silty clays, 6 to 9 percent slopes, PA2	0.000	0.000	0.000	0.000	0.000	0.062	0.000	0.000	0.049
Gulf Coast	TX	Wood	242.685	242.924	0.240	TX499	Millboro-Boro silty clays, 6 to 9 percent slopes, PA2	0.000	0.000	0.000	0.000	0.000	0.240	0.000	0.000	0.192
Gulf Coast	TX	Wood	242.924	242.974	0.050	TX499	Millboro-Boro silty clays, 6 to 9 percent slopes, PA2	0.000	0.000	0.000	0.000	0.000	0.050	0.000	0.000	0.040
Gulf Coast	TX	Wood	242.974	243.372	0.398	TX499	Millboro-Boro silty clays, 6 to 9 percent slopes, PA2	0.000	0.000	0.000	0.000	0.000	0.398	0.000	0.000	0.318
Gulf Coast	TX	Wood	243.372	243.513	0.141	TX499	Millboro-Boro silty clays, 6 to 9 percent slopes, PA2	0.000	0.000	0.000	0.000	0.000	0.141	0.000	0.000	0.113
Gulf Coast	TX	Wood	243.513	243.573	0.060	TX499	Millboro-Boro silty clays, 6 to 9 percent slopes, PA2	0.000	0.000	0.000	0.000	0.048	0.060	0.048	0.000	0.000
Gulf Coast	TX	Wood	243.573	243.711	0.138	TX499	Millboro-Boro silty clays, 6 to 9 percent slopes, PA2	0.000	0.000	0.000	0.000	0.000	0.138	0.000	0.000	0.110
Gulf Coast	TX	Wood	243.711	243.985	0.275	TX499	Millboro-Boro silty clays, 6 to 9 percent slopes, PA2	0.000	0.000	0.000	0.000	0.000	0.275	0.000	0.000	0.220
Gulf Coast	TX	Wood	243.985	244.456	0.471	TX499	Millboro-Boro silty clays, 6 to 9 percent slopes, PA2	0.377	0.000	0.000	0.000	0.000	0.471	0.000	0.000	0.377
Gulf Coast	TX	Wood	244.456	244.942	0.486	TX499	Millboro-Boro silty clays, 6 to 9 percent slopes, PA2	0.389	0.000	0.000	0.000	0.000	0.486	0.000	0.000	0.389
Gulf Coast	TX	Wood	244.942	245.342	0.401	TX499	Millboro-Boro silty clays, 6 to 9 percent slopes, PA2	0.320	0.000	0.000	0.000	0.000	0.401	0.000	0.000	0.320
Gulf Coast	TX	Wood	245.342	245.985	0.643	TX499	Millboro-Boro silty clays, 6 to 9 percent slopes, PA2	0.514	0.000	0.000	0.000	0.000	0.643	0.000	0.000	0.514
Gulf Coast	TX	Wood	245.985	246.050	0.064	TX499	Millboro-Boro silty clays, 6 to 9 percent slopes, PA2	0.052	0.000	0.000	0.000	0.000	0.064	0.000	0.000	0.052
Gulf Coast	TX	Wood	246.050	246.248	0.198	TX499	Millboro-Boro silty clays, 6 to 9 percent slopes, PA2	0.159	0.000	0.000	0.000	0.000	0.198	0.000	0.000	0.159
Gulf Coast	TX	Wood	246.248	246.566	0.318	TX499	Millboro-Boro silty clays, 6 to 9 percent slopes, PA2	0.255	0.000	0.000	0.000	0.000	0.318	0.000	0.000	0.255
Gulf Coast	TX	Wood	246.566	246.748	0.182	TX499	Millboro-Boro silty clays, 6 to 9 percent slopes, PA2	0.146	0.000	0.000	0.000	0.000	0.182	0.000	0.000	0.146
Gulf Coast	TX	Wood	246.748	247.182	0.434	TX499	Millboro-Boro silty clays, 6 to 9 percent slopes, PA2	0.348	0.000	0.000	0.000	0.000	0.434	0.000	0.000	0.348
Gulf Coast	TX	Wood	247.182	247.226	0.044	TX499	Millboro-Boro silty clays, 6 to 9 percent slopes, PA2	0.035	0.000	0.000	0.000	0.000	0.044	0.000	0.000	0.035
Gulf Coast	TX	Wood	247.226	247.266	0.040	TX499	Millboro-Boro silty clays, 6 to 9 percent slopes, PA2	0.000	0.000	0.000	0.000	0.032	0.040	0.032	0.000	0.000
Gulf Coast	TX	Wood	247.266	247.360	0.094	TX499	Millboro-Boro silty clays, 6 to 9 percent slopes, PA2	0.075	0.000	0.000	0.000	0.000	0.094	0.000	0.000	0.075
Gulf Coast	TX	Wood	247.360	247.544	0.183	TX499	Millboro-Boro silty clays, 6 to 9 percent slopes, PA2	0.147	0.000	0.000	0.000	0.000	0.183	0.000	0.000	0.147
Gulf	TX	Wood	247.544	247.626	0.082	TX499	Millboro-Boro silty clays, 6 to 9 percent slopes, PA2	0.066	0.000	0.000	0.000	0.000	0.082	0.000	0.000	0.066

Appendix K – Soils by Milepost – Gulf Coast Section

Pipeline Segment		County	Beginning Milepost	Ending Milepost	Miles	Soil Series	Soil Series Name	Wind (miles)	water (miles)	Low revegetation potential (miles)	Prime Farmland (miles)	Hydric (miles)	Compaction Prone (miles)	Stony-Rocky (miles)	Shallow Bedrock (miles)	Droughty (miles)
Coast																
Gulf Coast	TX	Wood	247.626	247.891	0.265	TX499	Millboro-Boro silty clays, 6 to 9 percent slopes, PA2	0.212	0.000	0.000	0.000	0.000	0.265	0.000	0.000	0.212
Gulf Coast	TX	Wood	247.891	248.027	0.136	TX499	Millboro-Boro silty clays, 6 to 9 percent slopes, PA2	0.109	0.000	0.000	0.000	0.000	0.136	0.000	0.000	0.109
Gulf Coast	TX	Wood	248.027	248.297	0.270	TX499	Millboro-Boro silty clays, 6 to 9 percent slopes, PA2	0.216	0.000	0.000	0.000	0.000	0.270	0.000	0.000	0.216
Gulf Coast	TX	Wood	248.297	248.391	0.093	TX499	Millboro-Boro silty clays, 6 to 9 percent slopes, PA2	0.075	0.000	0.000	0.000	0.000	0.093	0.000	0.000	0.075
Gulf Coast	TX	Wood	248.391	248.539	0.149	TX499	Millboro-Boro silty clays, 6 to 9 percent slopes, PA2	0.119	0.000	0.000	0.000	0.000	0.149	0.000	0.000	0.119
Gulf Coast	TX	Wood	248.539	248.592	0.053	TX499	Millboro-Boro silty clays, 6 to 9 percent slopes, PA2	0.043	0.000	0.000	0.000	0.000	0.053	0.000	0.000	0.043
Gulf Coast	TX	Wood	248.592	248.692	0.100	TX499	Millboro-Boro silty clays, 6 to 9 percent slopes, PA2	0.000	0.000	0.000	0.000	0.070	0.100	0.000	0.000	0.000
Gulf Coast	TX	Wood	248.692	248.756	0.064	TX499	Millboro-Boro silty clays, 6 to 9 percent slopes, PA2	0.000	0.051	0.000	0.000	0.000	0.064	0.000	0.051	0.000
Gulf Coast	TX	Wood	248.756	248.836	0.080	TX499	Millboro-Boro silty clays, 6 to 9 percent slopes, PA2	0.000	0.000	0.000	0.000	0.000	0.080	0.064	0.064	0.000
Gulf Coast	TX	Wood	248.836	248.908	0.072	TX499	Millboro-Boro silty clays, 6 to 9 percent slopes, PA2	0.000	0.057	0.000	0.000	0.000	0.072	0.000	0.057	0.000
Gulf Coast	TX	Wood	248.908	248.949	0.042	TX499	Millboro-Boro silty clays, 6 to 9 percent slopes, PA2	0.000	0.000	0.000	0.000	0.029	0.042	0.000	0.000	0.000
Gulf Coast	TX	Wood	248.949	249.004	0.054	TX499	Millboro-Boro silty clays, 6 to 9 percent slopes, PA2	0.000	0.043	0.000	0.000	0.000	0.054	0.000	0.043	0.000
Gulf Coast	TX	Wood	249.004	249.266	0.262	TX499	Millboro-Boro silty clays, 6 to 9 percent slopes, PA2	0.000	0.000	0.000	0.262	0.000	0.262	0.000	0.000	0.000
Gulf Coast	TX	Wood	249.266	249.753	0.487	TX499	Millboro-Boro silty clays, 6 to 9 percent slopes, PA2	0.390	0.000	0.000	0.000	0.000	0.487	0.000	0.000	0.390
Gulf Coast	TX	Wood	249.753	250.071	0.318	TX499	Millboro-Boro silty clays, 6 to 9 percent slopes, PA2	0.255	0.000	0.000	0.000	0.000	0.318	0.000	0.000	0.255
Gulf Coast	TX	Wood	250.071	250.300	0.228	TX499	Millboro-Boro silty clays, 6 to 9 percent slopes, PA2	0.183	0.000	0.000	0.000	0.000	0.228	0.000	0.000	0.183
Gulf Coast	TX	Wood	250.300	250.355	0.055	TX499	Millboro-Boro silty clays, 6 to 9 percent slopes, PA2	0.044	0.000	0.000	0.000	0.000	0.055	0.000	0.000	0.044
Gulf Coast	TX	Wood	250.355	250.500	0.145	TX499	Millboro-Boro silty clays, 6 to 9 percent slopes, PA2	0.116	0.000	0.000	0.000	0.000	0.145	0.000	0.000	0.116
Gulf Coast	TX	Wood	250.500	250.600	0.101	TX499	Millboro-Boro silty clays, 6 to 9 percent slopes, PA2	0.080	0.000	0.000	0.000	0.000	0.101	0.000	0.000	0.080
Gulf Coast	TX	Wood	250.600	250.690	0.090	TX499	Millboro-Boro silty clays, 6 to 9 percent slopes, PA2	0.072	0.000	0.000	0.000	0.000	0.090	0.000	0.000	0.072
Gulf Coast	TX	Wood	250.690	250.831	0.142	TX499	Millboro-Boro silty clays, 6 to 9 percent slopes, PA2	0.113	0.000	0.000	0.000	0.000	0.142	0.000	0.000	0.113
Gulf	TX	Wood	250.831	251.217	0.386	TX499	Millboro-Boro silty clays, 6 to 9 percent slopes, PA2	0.309	0.000	0.000	0.000	0.000	0.386	0.000	0.000	0.309

Appendix K – Soils by Milepost – Gulf Coast Section

Pipeline Segment		County	Beginning Milepost	Ending Milepost	Miles	Soil Series	Soil Series Name	Wind (miles)	water (miles)	Low revegetation potential (miles)	Prime Farmland (miles)	Hydric (miles)	Compaction Prone (miles)	Stony-Rocky (miles)	Shallow Bedrock (miles)	Droughty (miles)
Coast																
Gulf Coast	TX	Wood	251.217	251.447	0.229	TX499	Millboro-Boro silty clays, 6 to 9 percent slopes, PA2	0.184	0.184	0.000	0.000	0.000	0.229	0.000	0.184	0.184
Gulf Coast	TX	Wood	251.447	251.489	0.042	TX499	Millboro-Boro silty clays, 6 to 9 percent slopes, PA2	0.000	0.034	0.000	0.000	0.000	0.042	0.034	0.034	0.000
Gulf Coast	TX	Wood	251.489	251.591	0.102	TX499	Millboro-Boro silty clays, 6 to 9 percent slopes, PA2	0.000	0.000	0.000	0.000	0.000	0.102	0.000	0.000	0.000
Gulf Coast	TX	Wood	251.591	251.839	0.248	TX499	Millboro-Boro silty clays, 6 to 9 percent slopes, PA2	0.198	0.000	0.000	0.000	0.000	0.248	0.000	0.000	0.198
Gulf Coast	TX	Wood	251.839	252.760	0.921	TX499	Millboro-Boro silty clays, 6 to 9 percent slopes, PA2	0.737	0.000	0.000	0.000	0.000	0.921	0.000	0.000	0.737
Gulf Coast	TX	Wood	252.760	252.942	0.182	TX499	Millboro-Boro silty clays, 6 to 9 percent slopes, PA2	0.146	0.000	0.000	0.000	0.000	0.182	0.000	0.000	0.146
Gulf Coast	TX	Wood	252.942	252.993	0.051	TX499	Millboro-Boro silty clays, 6 to 9 percent slopes, PA2	0.041	0.000	0.000	0.000	0.000	0.051	0.000	0.000	0.041
Gulf Coast	TX	Wood	252.993	253.071	0.079	TX499	Millboro-Boro silty clays, 6 to 9 percent slopes, PA2	0.063	0.000	0.000	0.000	0.000	0.079	0.000	0.000	0.063
Gulf Coast	TX	Wood	253.071	253.181	0.110	TX499	Millboro-Boro silty clays, 6 to 9 percent slopes, PA2	0.088	0.000	0.000	0.000	0.000	0.110	0.000	0.000	0.088
Gulf Coast	TX	Wood	253.181	253.315	0.134	TX499	Millboro-Boro silty clays, 6 to 9 percent slopes, PA2	0.107	0.000	0.000	0.000	0.000	0.134	0.000	0.000	0.107
Gulf Coast	TX	Wood	253.315	253.399	0.084	TX499	Millboro-Boro silty clays, 6 to 9 percent slopes, PA2	0.067	0.000	0.000	0.000	0.000	0.084	0.000	0.000	0.067
Gulf Coast	TX	Wood	253.399	253.506	0.107	TX499	Millboro-Boro silty clays, 6 to 9 percent slopes, PA2	0.085	0.000	0.000	0.000	0.000	0.107	0.000	0.000	0.085
Gulf Coast	TX	Wood	253.506	253.878	0.373	TX499	Millboro-Boro silty clays, 6 to 9 percent slopes, PA2	0.298	0.000	0.000	0.000	0.000	0.373	0.000	0.000	0.298
Gulf Coast	TX	Wood	253.878	253.929	0.050	TX499	Millboro-Boro silty clays, 6 to 9 percent slopes, PA2	0.040	0.000	0.000	0.000	0.000	0.050	0.000	0.000	0.040
Gulf Coast	TX	Wood	253.929	253.976	0.048	TX499	Millboro-Boro silty clays, 6 to 9 percent slopes, PA2	0.038	0.000	0.000	0.000	0.000	0.048	0.000	0.000	0.038
Gulf Coast	TX	Wood	253.976	254.255	0.278	TX499	Millboro-Boro silty clays, 6 to 9 percent slopes, PA2	0.223	0.000	0.000	0.000	0.000	0.278	0.000	0.000	0.223
Gulf Coast	TX	Wood	254.255	254.305	0.051	TX499	Millboro-Boro silty clays, 6 to 9 percent slopes, PA2	0.040	0.000	0.000	0.000	0.000	0.051	0.000	0.000	0.040
Gulf Coast	TX	Wood	254.305	254.538	0.233	TX499	Millboro-Boro silty clays, 6 to 9 percent slopes, PA2	0.187	0.000	0.000	0.000	0.000	0.233	0.000	0.000	0.187
Gulf Coast	TX	Wood	254.538	254.640	0.102	TX499	Millboro-Boro silty clays, 6 to 9 percent slopes, PA2	0.082	0.000	0.000	0.000	0.000	0.102	0.000	0.000	0.082
Gulf Coast	TX	Wood	254.640	254.747	0.106	TX499	Millboro-Boro silty clays, 6 to 9 percent slopes, PA2	0.085	0.000	0.000	0.000	0.000	0.106	0.000	0.000	0.085
Gulf Coast	TX	Wood	254.747	254.858	0.111	TX499	Millboro-Boro silty clays, 6 to 9 percent slopes, PA2	0.089	0.000	0.000	0.000	0.000	0.111	0.000	0.000	0.089
Gulf	TX	Wood	254.858	255.097	0.239	TX499	Millboro-Boro silty clays, 6 to 9 percent slopes, PA2	0.191	0.000	0.000	0.000	0.000	0.239	0.000	0.000	0.191

Appendix K – Soils by Milepost – Gulf Coast Section

Pipeline Segment		County	Beginning Milepost	Ending Milepost	Miles	Soil Series	Soil Series Name	Wind (miles)	water (miles)	Low revegetation potential (miles)	Prime Farmland (miles)	Hydric (miles)	Compaction Prone (miles)	Stony-Rocky (miles)	Shallow Bedrock (miles)	Droughty (miles)
Coast																
Gulf Coast	TX	Upshur	255.097	255.175	0.078	TX608	Millboro-Boro silty clays, 6 to 9 percent slopes, PA2	0.062	0.000	0.000	0.000	0.000	0.078	0.000	0.000	0.062
Gulf Coast	TX	Upshur	255.175	255.336	0.161	TX608	Millboro-Boro silty clays, 6 to 9 percent slopes, PA2	0.129	0.000	0.000	0.000	0.000	0.161	0.000	0.000	0.129
Gulf Coast	TX	Upshur	255.336	255.578	0.243	TX608	Millboro-Boro silty clays, 6 to 9 percent slopes, PA2	0.000	0.000	0.000	0.000	0.206	0.243	0.000	0.000	0.000
Gulf Coast	TX	Upshur	255.578	255.680	0.102	TX608	Millboro-Boro silty clays, 6 to 9 percent slopes, PA2	0.081	0.000	0.000	0.000	0.000	0.102	0.000	0.000	0.081
Gulf Coast	TX	Wood	255.680	255.711	0.031	TX499	Millboro-Boro silty clays, 6 to 9 percent slopes, PA2	0.025	0.000	0.000	0.000	0.000	0.031	0.000	0.000	0.025
Gulf Coast	TX	Wood	255.711	255.867	0.156	TX499	Millboro-Boro silty clays, 6 to 9 percent slopes, PA2	0.000	0.000	0.000	0.000	0.109	0.156	0.000	0.000	0.000
Gulf Coast	TX	Wood	255.867	256.311	0.444	TX499	Millboro-Boro silty clays, 6 to 9 percent slopes, PA2	0.000	0.000	0.000	0.444	0.000	0.444	0.000	0.000	0.000
Gulf Coast	TX	Wood	256.311	256.479	0.168	TX499	Millboro-Boro silty clays, 6 to 9 percent slopes, PA2	0.134	0.000	0.141	0.000	0.000	0.168	0.000	0.000	0.134
Gulf Coast	TX	Wood	256.479	256.726	0.247	TX499	Millboro-Boro silty clays, 6 to 9 percent slopes, PA2	0.000	0.000	0.207	0.247	0.000	0.247	0.000	0.000	0.000
Gulf Coast	TX	Upshur	256.726	256.858	0.133	TX608	Millboro-Boro silty clays, 6 to 9 percent slopes, PA2	0.000	0.000	0.111	0.133	0.000	0.133	0.000	0.000	0.000
Gulf Coast	TX	Upshur	256.858	256.945	0.087	TX608	Millboro-Boro silty clays, 6 to 9 percent slopes, PA2	0.000	0.070	0.073	0.000	0.000	0.087	0.000	0.000	0.070
Gulf Coast	TX	Upshur	256.945	257.108	0.163	TX608	Millboro-Boro silty clays, 6 to 9 percent slopes, PA2	0.139	0.000	0.137	0.000	0.000	0.163	0.000	0.000	0.139
Gulf Coast	TX	Upshur	257.108	257.216	0.108	TX608	Millboro-Boro silty clays, 6 to 9 percent slopes, PA2	0.000	0.000	0.091	0.108	0.000	0.108	0.000	0.000	0.000
Gulf Coast	TX	Upshur	257.216	257.299	0.082	TX608	Millboro-Boro silty clays, 6 to 9 percent slopes, PA2	0.000	0.000	0.069	0.000	0.000	0.082	0.000	0.000	0.070
Gulf Coast	TX	Upshur	257.299	257.789	0.490	TX608	Millboro-Boro silty clays, 6 to 9 percent slopes, PA2	0.000	0.000	0.412	0.490	0.000	0.490	0.000	0.000	0.000
Gulf Coast	TX	Upshur	257.789	257.871	0.081	TX608	Millboro-Boro silty clays, 6 to 9 percent slopes, PA2	0.000	0.000	0.068	0.000	0.049	0.081	0.000	0.000	0.000
Gulf Coast	TX	Upshur	257.871	258.448	0.578	TX608	Millboro-Boro silty clays, 6 to 9 percent slopes, PA2	0.000	0.000	0.485	0.578	0.000	0.578	0.000	0.000	0.000
Gulf Coast	TX	Upshur	258.448	258.499	0.051	TX608	Millboro-Boro silty clays, 6 to 9 percent slopes, PA2	0.000	0.040	0.043	0.000	0.000	0.051	0.000	0.040	0.000
Gulf Coast	TX	Upshur	258.499	258.621	0.122	TX608	Millboro-Boro silty clays, 6 to 9 percent slopes, PA2	0.098	0.000	0.103	0.000	0.000	0.122	0.000	0.000	0.098
Gulf Coast	TX	Upshur	258.621	258.629	0.008	TX608	Millboro-Boro silty clays, 6 to 9 percent slopes, PA2	0.000	0.006	0.006	0.000	0.000	0.008	0.000	0.006	0.000
Gulf Coast	TX	Upshur	258.629	258.810	0.181	TX608	Millboro-Boro silty clays, 6 to 9 percent slopes, PA2	0.000	0.000	0.152	0.181	0.000	0.181	0.000	0.000	0.000
Gulf	TX	Upshur	258.810	258.822	0.012	TX608	Millboro-Boro silty clays, 6 to 9 percent slopes, PA2	0.000	0.009	0.010	0.000	0.000	0.012	0.000	0.009	0.000

Appendix K – Soils by Milepost – Gulf Coast Section

Pipeline Segment		County	Beginning Milepost	Ending Milepost	Miles	Soil Series	Soil Series Name	Wind (miles)	water (miles)	Low revegetation potential (miles)	Prime Farmland (miles)	Hydric (miles)	Compaction Prone (miles)	Stony-Rocky (miles)	Shallow Bedrock (miles)	Droughty (miles)
Coast																
Gulf Coast	TX	Upshur	258.822	258.823	0.001	TX608	Millboro-Boro silty clays, 6 to 9 percent slopes, PA2	0.001	0.000	0.001	0.000	0.000	0.001	0.000	0.000	0.001
Gulf Coast	TX	Upshur	258.823	258.936	0.113	TX608	Millboro-Boro silty clays, 6 to 9 percent slopes, PA2	0.000	0.091	0.095	0.000	0.000	0.113	0.000	0.091	0.000
Gulf Coast	TX	Upshur	258.936	258.993	0.057	TX608	Millboro-Boro silty clays, 6 to 9 percent slopes, PA2	0.000	0.000	0.048	0.057	0.000	0.057	0.000	0.000	0.000
Gulf Coast	TX	Upshur	258.993	259.045	0.052	TX608	Millboro-Boro silty clays, 6 to 9 percent slopes, PA2	0.000	0.041	0.044	0.000	0.000	0.052	0.000	0.041	0.000
Gulf Coast	TX	Upshur	259.045	259.471	0.426	TX608	Millboro-Boro silty clays, 6 to 9 percent slopes, PA2	0.000	0.000	0.358	0.426	0.000	0.426	0.000	0.000	0.000
Gulf Coast	TX	Upshur	259.471	259.494	0.023	TX608	Millboro-Boro silty clays, 6 to 9 percent slopes, PA2	0.000	0.019	0.020	0.000	0.000	0.023	0.000	0.019	0.000
Gulf Coast	TX	Upshur	259.494	259.560	0.066	TX608	Millboro-Boro silty clays, 6 to 9 percent slopes, PA2	0.000	0.000	0.055	0.000	0.007	0.066	0.000	0.000	0.000
Gulf Coast	TX	Upshur	259.560	259.731	0.171	TX608	Millboro-Boro silty clays, 6 to 9 percent slopes, PA2	0.000	0.137	0.144	0.000	0.000	0.171	0.000	0.137	0.000
Gulf Coast	TX	Upshur	259.731	259.757	0.026	TX608	Millboro-Boro silty clays, 6 to 9 percent slopes, PA2	0.000	0.021	0.022	0.000	0.000	0.026	0.000	0.000	0.021
Gulf Coast	TX	Upshur	259.757	259.814	0.057	TX608	Millboro-Boro silty clays, 6 to 9 percent slopes, PA2	0.000	0.000	0.048	0.000	0.048	0.057	0.000	0.000	0.000
Gulf Coast	TX	Upshur	259.814	259.846	0.033	TX608	Millboro-Boro silty clays, 6 to 9 percent slopes, PA2	0.000	0.026	0.027	0.000	0.000	0.033	0.000	0.000	0.026
Gulf Coast	TX	Upshur	259.846	260.086	0.240	TX608	Millboro-Boro silty clays, 6 to 9 percent slopes, PA2	0.204	0.204	0.202	0.000	0.000	0.240	0.000	0.204	0.204
Gulf Coast	TX	Upshur	260.086	260.248	0.162	TX608	Millboro-Boro silty clays, 6 to 9 percent slopes, PA2	0.000	0.129	0.136	0.000	0.000	0.162	0.000	0.000	0.129
Gulf Coast	TX	Upshur	260.248	260.384	0.136	TX608	Millboro-Boro silty clays, 6 to 9 percent slopes, PA2	0.000	0.000	0.114	0.136	0.000	0.136	0.000	0.000	0.000
Gulf Coast	TX	Upshur	260.384	260.470	0.086	TX608	Millboro-Boro silty clays, 6 to 9 percent slopes, PA2	0.000	0.069	0.072	0.000	0.000	0.086	0.000	0.000	0.069
Gulf Coast	TX	Upshur	260.470	260.703	0.233	TX608	Millboro-Boro silty clays, 6 to 9 percent slopes, PA2	0.000	0.000	0.196	0.233	0.000	0.233	0.000	0.000	0.000
Gulf Coast	TX	Upshur	260.703	260.853	0.150	TX608	Millboro-Boro silty clays, 6 to 9 percent slopes, PA2	0.000	0.000	0.126	0.000	0.000	0.150	0.000	0.000	0.128
Gulf Coast	TX	Upshur	260.853	260.945	0.093	TX608	Millboro-Boro silty clays, 6 to 9 percent slopes, PA2	0.000	0.000	0.078	0.000	0.079	0.093	0.000	0.000	0.000
Gulf Coast	TX	Upshur	260.945	261.058	0.112	TX608	Millboro-Boro silty clays, 6 to 9 percent slopes, PA2	0.056	0.000	0.094	0.000	0.039	0.112	0.000	0.000	0.056
Gulf Coast	TX	Upshur	261.058	261.092	0.035	TX608	Millboro-Boro silty clays, 6 to 9 percent slopes, PA2	0.000	0.000	0.029	0.000	0.029	0.035	0.000	0.000	0.000
Gulf Coast	TX	Upshur	261.092	261.176	0.084	TX608	Millboro-Boro silty clays, 6 to 9 percent slopes, PA2	0.042	0.000	0.070	0.000	0.029	0.084	0.000	0.000	0.042
Gulf	TX	Upshur	261.176	262.167	0.991	TX608	Millboro-Boro silty clays, 6 to 9 percent slopes, PA2	0.000	0.000	0.832	0.000	0.842	0.991	0.000	0.000	0.000

Appendix K – Soils by Milepost – Gulf Coast Section

Pipeline Segment		County	Beginning Milepost	Ending Milepost	Miles	Soil Series	Soil Series Name	Wind (miles)	water (miles)	Low revegetation potential (miles)	Prime Farmland (miles)	Hydric (miles)	Compaction Prone (miles)	Stony-Rocky (miles)	Shallow Bedrock (miles)	Droughty (miles)
Coast																
Gulf Coast	TX	Smith	262.167	262.201	0.034	TX423	Millboro-Boro silty clays, 6 to 9 percent slopes, PA2	0.000	0.000	0.029	0.000	0.024	0.034	0.000	0.000	0.000
Gulf Coast	TX	Smith	262.201	262.468	0.267	TX423	Millboro-Boro silty clays, 6 to 9 percent slopes, PA2	0.000	0.214	0.224	0.000	0.000	0.267	0.000	0.214	0.000
Gulf Coast	TX	Smith	262.468	262.678	0.210	TX423	Millboro-Boro silty clays, 6 to 9 percent slopes, PA2	0.000	0.000	0.176	0.210	0.000	0.210	0.000	0.000	0.000
Gulf Coast	TX	Smith	262.678	262.759	0.081	TX423	Millboro-Boro silty clays, 6 to 9 percent slopes, PA2	0.000	0.065	0.068	0.000	0.000	0.081	0.000	0.065	0.000
Gulf Coast	TX	Smith	262.759	262.839	0.080	TX423	Millboro-Boro silty clays, 6 to 9 percent slopes, PA2	0.000	0.000	0.067	0.080	0.000	0.080	0.000	0.000	0.000
Gulf Coast	TX	Smith	262.839	262.954	0.115	TX423	Millboro-Boro silty clays, 6 to 9 percent slopes, PA2	0.000	0.000	0.097	0.115	0.000	0.115	0.000	0.000	0.000
Gulf Coast	TX	Smith	262.954	263.069	0.115	TX423	Millboro-Boro silty clays, 6 to 9 percent slopes, PA2	0.000	0.000	0.096	0.000	0.000	0.115	0.000	0.092	0.000
Gulf Coast	TX	Smith	263.069	263.196	0.128	TX423	Millboro-Boro silty clays, 6 to 9 percent slopes, PA2	0.000	0.000	0.107	0.128	0.000	0.128	0.000	0.000	0.000
Gulf Coast	TX	Smith	263.196	263.350	0.153	TX423	Millboro-Boro silty clays, 6 to 9 percent slopes, PA2	0.000	0.000	0.129	0.000	0.000	0.153	0.000	0.123	0.000
Gulf Coast	TX	Smith	263.350	263.672	0.323	TX423	Millboro-Boro silty clays, 6 to 9 percent slopes, PA2	0.000	0.000	0.271	0.000	0.000	0.323	0.242	0.242	0.000
Gulf Coast	TX	Smith	263.672	263.888	0.216	TX423	Millboro-Boro silty clays, 6 to 9 percent slopes, PA2	0.000	0.184	0.182	0.000	0.000	0.216	0.184	0.184	0.000
Gulf Coast	TX	Smith	263.888	263.987	0.099	TX423	Millboro-Boro silty clays, 6 to 9 percent slopes, PA2	0.000	0.000	0.083	0.000	0.000	0.099	0.000	0.079	0.000
Gulf Coast	TX	Smith	263.987	264.288	0.301	TX423	Millboro-Boro silty clays, 6 to 9 percent slopes, PA2	0.000	0.000	0.253	0.301	0.000	0.301	0.000	0.000	0.000
Gulf Coast	TX	Smith	264.288	264.584	0.296	TX423	Millboro-Boro silty clays, 6 to 9 percent slopes, PA2	0.000	0.237	0.249	0.000	0.000	0.296	0.237	0.237	0.000
Gulf Coast	TX	Smith	264.584	264.692	0.108	TX423	Millboro-Boro silty clays, 6 to 9 percent slopes, PA2	0.000	0.091	0.090	0.000	0.000	0.108	0.091	0.091	0.000
Gulf Coast	TX	Smith	264.692	264.732	0.040	TX423	Millboro-Boro silty clays, 6 to 9 percent slopes, PA2	0.000	0.032	0.034	0.000	0.000	0.040	0.032	0.032	0.000
Gulf Coast	TX	Smith	264.732	264.896	0.164	TX423	Millboro-Boro silty clays, 6 to 9 percent slopes, PA2	0.000	0.000	0.138	0.000	0.000	0.164	0.131	0.131	0.000
Gulf Coast	TX	Smith	264.896	265.049	0.154	TX423	Millboro-Boro silty clays, 6 to 9 percent slopes, PA2	0.000	0.000	0.129	0.000	0.000	0.154	0.000	0.123	0.000
Gulf Coast	TX	Smith	265.049	265.251	0.202	TX423	Millboro-Boro silty clays, 6 to 9 percent slopes, PA2	0.000	0.000	0.170	0.202	0.000	0.202	0.000	0.000	0.000
Gulf Coast	TX	Smith	265.251	265.499	0.248	TX423	Millboro-Boro silty clays, 6 to 9 percent slopes, PA2	0.000	0.000	0.208	0.000	0.000	0.248	0.000	0.199	0.000
Gulf Coast	TX	Smith	265.499	265.589	0.090	TX423	Millboro-Boro silty clays, 6 to 9 percent slopes, PA2	0.000	0.072	0.076	0.000	0.000	0.090	0.000	0.072	0.000
Gulf	TX	Smith	265.589	266.005	0.415	TX423	Millboro-Boro silty clays, 6 to 9 percent slopes, PA2	0.000	0.000	0.349	0.415	0.000	0.415	0.000	0.000	0.000

Appendix K – Soils by Milepost – Gulf Coast Section

Pipeline Segment		County	Beginning Milepost	Ending Milepost	Miles	Soil Series	Soil Series Name	Wind (miles)	water (miles)	Low revegetation potential (miles)	Prime Farmland (miles)	Hydric (miles)	Compaction Prone (miles)	Stony-Rocky (miles)	Shallow Bedrock (miles)	Droughty (miles)
Coast																
Gulf Coast	TX	Smith	266.005	266.183	0.178	TX423	Millboro-Boro silty clays, 6 to 9 percent slopes, PA2	0.000	0.143	0.150	0.000	0.000	0.178	0.000	0.143	0.000
Gulf Coast	TX	Smith	266.183	266.227	0.044	TX423	Millboro-Boro silty clays, 6 to 9 percent slopes, PA2	0.000	0.000	0.037	0.044	0.000	0.044	0.000	0.000	0.000
Gulf Coast	TX	Smith	266.227	266.309	0.083	TX423	Millboro-Boro silty clays, 6 to 9 percent slopes, PA2	0.000	0.000	0.069	0.083	0.000	0.083	0.000	0.000	0.000
Gulf Coast	TX	Smith	266.309	266.497	0.188	TX423	Millboro-Boro silty clays, 6 to 9 percent slopes, PA2	0.000	0.000	0.158	0.188	0.000	0.188	0.000	0.000	0.000
Gulf Coast	TX	Smith	266.497	266.558	0.060	TX423	Millboro-Boro silty clays, 6 to 9 percent slopes, PA2	0.048	0.000	0.051	0.060	0.000	0.060	0.000	0.000	0.048
Gulf Coast	TX	Smith	266.558	266.596	0.038	TX423	Millboro-Boro silty clays, 6 to 9 percent slopes, PA2	0.000	0.031	0.032	0.000	0.000	0.038	0.000	0.031	0.000
Gulf Coast	TX	Smith	266.596	267.004	0.408	TX423	Millboro-Boro silty clays, 6 to 9 percent slopes, PA2	0.000	0.000	0.342	0.408	0.000	0.408	0.000	0.000	0.000
Gulf Coast	TX	Smith	267.004	267.067	0.063	TX423	Millboro-Boro silty clays, 6 to 9 percent slopes, PA2	0.000	0.051	0.053	0.000	0.000	0.063	0.000	0.051	0.000
Gulf Coast	TX	Smith	267.067	267.127	0.059	TX423	Millboro-Boro silty clays, 6 to 9 percent slopes, PA2	0.000	0.000	0.050	0.059	0.000	0.059	0.000	0.000	0.000
Gulf Coast	TX	Smith	267.127	267.313	0.187	TX423	Millboro-Boro silty clays, 6 to 9 percent slopes, PA2	0.000	0.149	0.157	0.000	0.000	0.187	0.000	0.149	0.000
Gulf Coast	TX	Smith	267.313	267.359	0.046	TX423	Millboro-Boro silty clays, 6 to 9 percent slopes, PA2	0.000	0.000	0.039	0.046	0.000	0.046	0.000	0.000	0.000
Gulf Coast	TX	Smith	267.359	267.607	0.248	TX423	Millboro-Boro silty clays, 6 to 9 percent slopes, PA2	0.198	0.000	0.208	0.248	0.000	0.248	0.000	0.000	0.198
Gulf Coast	TX	Smith	267.607	267.822	0.216	TX423	Millboro-Boro silty clays, 6 to 9 percent slopes, PA2	0.000	0.172	0.181	0.000	0.000	0.216	0.000	0.172	0.000
Gulf Coast	TX	Smith	267.822	267.895	0.073	TX423	Millboro-Boro silty clays, 6 to 9 percent slopes, PA2	0.000	0.000	0.061	0.073	0.000	0.073	0.000	0.000	0.000
Gulf Coast	TX	Smith	267.895	268.039	0.144	TX423	Millboro-Boro silty clays, 6 to 9 percent slopes, PA2	0.000	0.115	0.121	0.000	0.000	0.144	0.000	0.115	0.000
Gulf Coast	TX	Smith	268.039	268.277	0.239	TX423	Millboro-Boro silty clays, 6 to 9 percent slopes, PA2	0.000	0.000	0.200	0.239	0.000	0.239	0.000	0.000	0.000
Gulf Coast	TX	Smith	268.277	268.436	0.159	TX423	Millboro-Boro silty clays, 6 to 9 percent slopes, PA2	0.000	0.127	0.133	0.000	0.000	0.159	0.000	0.127	0.000
Gulf Coast	TX	Smith	268.436	268.490	0.054	TX423	Millboro-Boro silty clays, 6 to 9 percent slopes, PA2	0.000	0.000	0.046	0.054	0.000	0.054	0.000	0.000	0.000
Gulf Coast	TX	Smith	268.490	268.671	0.181	TX423	Millboro-Boro silty clays, 6 to 9 percent slopes, PA2	0.000	0.000	0.152	0.000	0.000	0.181	0.000	0.145	0.000
Gulf Coast	TX	Smith	268.671	268.749	0.078	TX423	Millboro-Boro silty clays, 6 to 9 percent slopes, PA2	0.000	0.062	0.066	0.000	0.000	0.078	0.000	0.062	0.000
Gulf Coast	TX	Smith	268.749	268.817	0.068	TX423	Millboro-Boro silty clays, 6 to 9 percent slopes, PA2	0.054	0.000	0.057	0.000	0.000	0.068	0.000	0.000	0.054
Gulf	TX	Smith	268.817	268.911	0.094	TX423	Millboro-Boro silty clays, 6 to 9 percent slopes, PA2	0.000	0.075	0.079	0.000	0.000	0.094	0.000	0.075	0.000

Appendix K – Soils by Milepost – Gulf Coast Section

Pipeline Segment		County	Beginning Milepost	Ending Milepost	Miles	Soil Series	Soil Series Name	Wind (miles)	water (miles)	Low revegetation potential (miles)	Prime Farmland (miles)	Hydric (miles)	Compaction Prone (miles)	Stony-Rocky (miles)	Shallow Bedrock (miles)	Droughty (miles)
Coast																
Gulf Coast	TX	Smith	268.911	268.951	0.041	TX423	Millboro-Boro silty clays, 6 to 9 percent slopes, PA2	0.032	0.032	0.034	0.000	0.000	0.041	0.000	0.032	0.032
Gulf Coast	TX	Smith	268.951	268.995	0.044	TX423	Millboro-Boro silty clays, 6 to 9 percent slopes, PA2	0.035	0.000	0.037	0.000	0.000	0.044	0.000	0.000	0.035
Gulf Coast	TX	Smith	268.995	269.155	0.161	TX423	Millboro-Boro silty clays, 6 to 9 percent slopes, PA2	0.129	0.000	0.135	0.000	0.000	0.161	0.000	0.000	0.129
Gulf Coast	TX	Smith	269.155	269.411	0.255	TX423	Millboro-Boro silty clays, 6 to 9 percent slopes, PA2	0.000	0.000	0.214	0.000	0.179	0.255	0.000	0.000	0.000
Gulf Coast	TX	Smith	269.411	269.477	0.067	TX423	Millboro-Boro silty clays, 6 to 9 percent slopes, PA2	0.000	0.053	0.056	0.000	0.000	0.067	0.000	0.053	0.000
Gulf Coast	TX	Smith	269.477	269.680	0.203	TX423	Millboro-Boro silty clays, 6 to 9 percent slopes, PA2	0.162	0.000	0.170	0.000	0.000	0.203	0.000	0.000	0.162
Gulf Coast	TX	Smith	269.680	269.863	0.183	TX423	Millboro-Boro silty clays, 6 to 9 percent slopes, PA2	0.000	0.146	0.154	0.000	0.000	0.183	0.000	0.146	0.000
Gulf Coast	TX	Smith	269.863	269.938	0.075	TX423	Millboro-Boro silty clays, 6 to 9 percent slopes, PA2	0.000	0.000	0.063	0.075	0.000	0.075	0.000	0.000	0.000
Gulf Coast	TX	Smith	269.938	270.047	0.109	TX423	Millboro-Boro silty clays, 6 to 9 percent slopes, PA2	0.000	0.000	0.092	0.000	0.000	0.109	0.000	0.088	0.000
Gulf Coast	TX	Smith	270.047	270.204	0.157	TX423	Millboro-Boro silty clays, 6 to 9 percent slopes, PA2	0.000	0.000	0.132	0.000	0.000	0.157	0.000	0.134	0.134
Gulf Coast	TX	Smith	270.204	270.265	0.061	TX423	Millboro-Boro silty clays, 6 to 9 percent slopes, PA2	0.048	0.000	0.051	0.000	0.000	0.061	0.000	0.000	0.048
Gulf Coast	TX	Smith	270.265	270.403	0.138	TX423	Millboro-Boro silty clays, 6 to 9 percent slopes, PA2	0.000	0.000	0.116	0.000	0.000	0.138	0.000	0.110	0.000
Gulf Coast	TX	Smith	270.403	270.508	0.105	TX423	Millboro-Boro silty clays, 6 to 9 percent slopes, PA2	0.000	0.000	0.088	0.000	0.000	0.105	0.000	0.000	0.000
Gulf Coast	TX	Smith	270.508	270.649	0.140	TX423	Millboro-Boro silty clays, 6 to 9 percent slopes, PA2	0.000	0.000	0.118	0.140	0.000	0.140	0.000	0.000	0.000
Gulf Coast	TX	Smith	270.649	270.663	0.015	TX423	Millboro-Boro silty clays, 6 to 9 percent slopes, PA2	0.000	0.000	0.012	0.000	0.000	0.015	0.000	0.000	0.000
Gulf Coast	TX	Smith	270.663	270.713	0.050	TX423	Millboro-Boro silty clays, 6 to 9 percent slopes, PA2	0.000	0.040	0.042	0.000	0.000	0.050	0.000	0.040	0.000
Gulf Coast	TX	Smith	270.713	270.774	0.061	TX423	Millboro-Boro silty clays, 6 to 9 percent slopes, PA2	0.000	0.000	0.051	0.000	0.000	0.061	0.000	0.000	0.000
Gulf Coast	TX	Smith	270.774	270.818	0.044	TX423	Millboro-Boro silty clays, 6 to 9 percent slopes, PA2	0.000	0.000	0.037	0.044	0.000	0.044	0.000	0.000	0.000
Gulf Coast	TX	Smith	270.818	270.918	0.100	TX423	Millboro-Boro silty clays, 6 to 9 percent slopes, PA2	0.080	0.000	0.084	0.000	0.000	0.100	0.000	0.000	0.080
Gulf Coast	TX	Smith	270.918	271.329	0.411	TX423	Millboro-Boro silty clays, 6 to 9 percent slopes, PA2	0.000	0.000	0.345	0.411	0.000	0.411	0.000	0.000	0.000
Gulf Coast	TX	Smith	271.329	271.547	0.219	TX423	Millboro-Boro silty clays, 6 to 9 percent slopes, PA2	0.175	0.000	0.184	0.000	0.000	0.219	0.000	0.000	0.175
Gulf	TX	Smith	271.547	271.652	0.105	TX423	Millboro-Boro silty clays, 6 to 9 percent slopes, PA2	0.000	0.000	0.088	0.000	0.000	0.105	0.000	0.000	0.000

Appendix K – Soils by Milepost – Gulf Coast Section

Pipeline Segment		County	Beginning Milepost	Ending Milepost	Miles	Soil Series	Soil Series Name	Wind (miles)	water (miles)	Low revegetation potential (miles)	Prime Farmland (miles)	Hydric (miles)	Compaction Prone (miles)	Stony-Rocky (miles)	Shallow Bedrock (miles)	Droughty (miles)
Coast																
Gulf Coast	TX	Smith	271.652	271.666	0.014	TX423	Millboro-Boro silty clays, 6 to 9 percent slopes, PA2	0.011	0.011	0.012	0.000	0.000	0.014	0.000	0.011	0.011
Gulf Coast	TX	Smith	271.666	271.962	0.296	TX423	Millboro-Boro silty clays, 6 to 9 percent slopes, PA2	0.237	0.000	0.249	0.000	0.000	0.296	0.000	0.000	0.237
Gulf Coast	TX	Smith	271.962	272.024	0.062	TX423	Millboro-Boro silty clays, 6 to 9 percent slopes, PA2	0.050	0.000	0.052	0.000	0.000	0.062	0.000	0.000	0.050
Gulf Coast	TX	Smith	272.024	272.167	0.143	TX423	Millboro-Boro silty clays, 6 to 9 percent slopes, PA2	0.114	0.000	0.120	0.143	0.000	0.143	0.000	0.000	0.114
Gulf Coast	TX	Smith	272.167	272.303	0.136	TX423	Millboro-Boro silty clays, 6 to 9 percent slopes, PA2	0.000	0.000	0.114	0.000	0.068	0.136	0.000	0.000	0.000
Gulf Coast	TX	Smith	272.303	272.371	0.067	TX423	Millboro-Boro silty clays, 6 to 9 percent slopes, PA2	0.000	0.000	0.056	0.000	0.047	0.067	0.000	0.000	0.000
Gulf Coast	TX	Smith	272.371	272.589	0.218	TX423	Millboro-Boro silty clays, 6 to 9 percent slopes, PA2	0.000	0.000	0.183	0.000	0.109	0.218	0.000	0.000	0.000
Gulf Coast	TX	Smith	272.589	272.750	0.162	TX423	Millboro-Boro silty clays, 6 to 9 percent slopes, PA2	0.000	0.000	0.136	0.000	0.129	0.162	0.000	0.000	0.000
Gulf Coast	TX	Smith	272.750	273.209	0.458	TX423	Millboro-Boro silty clays, 6 to 9 percent slopes, PA2	0.367	0.000	0.385	0.000	0.000	0.458	0.000	0.000	0.367
Gulf Coast	TX	Smith	273.209	273.309	0.101	TX423	Millboro-Boro silty clays, 6 to 9 percent slopes, PA2	0.080	0.000	0.085	0.000	0.000	0.101	0.000	0.000	0.080
Gulf Coast	TX	Smith	273.309	273.426	0.117	TX423	Millboro-Boro silty clays, 6 to 9 percent slopes, PA2	0.094	0.000	0.098	0.000	0.000	0.117	0.000	0.000	0.094
Gulf Coast	TX	Smith	273.426	273.455	0.029	TX423	Millboro-Boro silty clays, 6 to 9 percent slopes, PA2	0.023	0.000	0.024	0.000	0.000	0.029	0.000	0.000	0.023
Gulf Coast	TX	Smith	273.455	273.637	0.182	TX423	Millboro-Boro silty clays, 6 to 9 percent slopes, PA2	0.146	0.000	0.153	0.000	0.000	0.182	0.000	0.000	0.146
Gulf Coast	TX	Smith	273.637	273.742	0.105	TX423	Millboro-Boro silty clays, 6 to 9 percent slopes, PA2	0.000	0.000	0.088	0.000	0.000	0.105	0.000	0.000	0.000
Gulf Coast	TX	Smith	273.742	273.979	0.238	TX423	Millboro-Boro silty clays, 6 to 9 percent slopes, PA2	0.000	0.000	0.200	0.000	0.166	0.238	0.000	0.000	0.000
Gulf Coast	TX	Smith	273.979	274.033	0.054	TX423	Millboro-Boro silty clays, 6 to 9 percent slopes, PA2	0.043	0.000	0.046	0.000	0.000	0.054	0.000	0.000	0.043
Gulf Coast	TX	Smith	274.033	274.156	0.123	TX423	Millboro-Boro silty clays, 6 to 9 percent slopes, PA2	0.000	0.000	0.103	0.000	0.086	0.123	0.000	0.000	0.000
Gulf Coast	TX	Smith	274.156	274.253	0.097	TX423	Millboro-Boro silty clays, 6 to 9 percent slopes, PA2	0.000	0.078	0.081	0.000	0.000	0.097	0.000	0.078	0.000
Gulf Coast	TX	Smith	274.253	274.851	0.598	TX423	Millboro-Boro silty clays, 6 to 9 percent slopes, PA2	0.479	0.000	0.503	0.000	0.000	0.598	0.000	0.000	0.479
Gulf Coast	TX	Smith	274.851	275.075	0.223	TX423	Millboro-Boro silty clays, 6 to 9 percent slopes, PA2	0.179	0.000	0.188	0.000	0.000	0.223	0.000	0.000	0.179
Gulf Coast	TX	Smith	275.075	275.402	0.327	TX423	Millboro-Boro silty clays, 6 to 9 percent slopes, PA2	0.262	0.000	0.275	0.000	0.000	0.327	0.000	0.000	0.262
Gulf	TX	Smith	275.402	275.559	0.157	TX423	Millboro-Boro silty clays, 6 to 9 percent slopes, PA2	0.000	0.000	0.132	0.000	0.110	0.157	0.000	0.000	0.000

Appendix K – Soils by Milepost – Gulf Coast Section

Pipeline Segment		County	Beginning Milepost	Ending Milepost	Miles	Soil Series	Soil Series Name	Wind (miles)	water (miles)	Low revegetation potential (miles)	Prime Farmland (miles)	Hydric (miles)	Compaction Prone (miles)	Stony-Rocky (miles)	Shallow Bedrock (miles)	Droughty (miles)
Coast																
Gulf Coast	TX	Smith	275.559	275.800	0.241	TX423	Millboro-Boro silty clays, 6 to 9 percent slopes, PA2	0.193	0.000	0.202	0.000	0.000	0.241	0.000	0.000	0.193
Gulf Coast	TX	Smith	275.800	275.852	0.052	TX423	Millboro-Boro silty clays, 6 to 9 percent slopes, PA2	0.000	0.000	0.044	0.000	0.039	0.052	0.000	0.000	0.000
Gulf Coast	TX	Smith	275.852	276.143	0.291	TX423	Millboro-Boro silty clays, 6 to 9 percent slopes, PA2	0.233	0.000	0.245	0.000	0.000	0.291	0.000	0.000	0.233
Gulf Coast	TX	Smith	276.143	276.215	0.072	TX423	Millboro-Boro silty clays, 6 to 9 percent slopes, PA2	0.000	0.000	0.060	0.000	0.050	0.072	0.000	0.000	0.000
Gulf Coast	TX	Smith	276.215	276.256	0.041	TX423	Millboro-Boro silty clays, 6 to 9 percent slopes, PA2	0.000	0.000	0.035	0.000	0.000	0.041	0.000	0.033	0.000
Gulf Coast	TX	Smith	276.256	276.773	0.517	TX423	Millboro-Boro silty clays, 6 to 9 percent slopes, PA2	0.414	0.000	0.435	0.000	0.000	0.517	0.000	0.000	0.414
Gulf Coast	TX	Smith	276.773	276.987	0.214	TX423	Millboro-Boro silty clays, 6 to 9 percent slopes, PA2	0.000	0.000	0.179	0.000	0.149	0.214	0.000	0.000	0.000
Gulf Coast	TX	Smith	276.987	277.195	0.208	TX423	Millboro-Boro silty clays, 6 to 9 percent slopes, PA2	0.166	0.000	0.174	0.000	0.000	0.208	0.000	0.000	0.166
Gulf Coast	TX	Smith	277.195	277.363	0.169	TX423	Millboro-Boro silty clays, 6 to 9 percent slopes, PA2	0.000	0.000	0.142	0.000	0.118	0.169	0.000	0.000	0.000
Gulf Coast	TX	Smith	277.363	278.115	0.751	TX423	Millboro-Boro silty clays, 6 to 9 percent slopes, PA2	0.601	0.000	0.631	0.000	0.000	0.751	0.000	0.000	0.601
Gulf Coast	TX	Smith	278.115	278.174	0.060	TX423	Millboro-Boro silty clays, 6 to 9 percent slopes, PA2	0.000	0.048	0.050	0.000	0.000	0.060	0.000	0.048	0.000
Gulf Coast	TX	Smith	278.174	278.460	0.285	TX423	Millboro-Boro silty clays, 6 to 9 percent slopes, PA2	0.228	0.000	0.240	0.000	0.000	0.285	0.000	0.000	0.228
Gulf Coast	TX	Smith	278.460	278.514	0.054	TX423	Millboro-Boro silty clays, 6 to 9 percent slopes, PA2	0.000	0.000	0.045	0.000	0.000	0.054	0.000	0.043	0.000
Gulf Coast	TX	Smith	278.514	278.672	0.158	TX423	Millboro-Boro silty clays, 6 to 9 percent slopes, PA2	0.000	0.126	0.133	0.000	0.000	0.158	0.000	0.126	0.000
Gulf Coast	TX	Smith	278.672	278.768	0.096	TX423	Millboro-Boro silty clays, 6 to 9 percent slopes, PA2	0.000	0.000	0.081	0.096	0.000	0.096	0.000	0.000	0.000
Gulf Coast	TX	Smith	278.768	278.833	0.065	TX423	Millboro-Boro silty clays, 6 to 9 percent slopes, PA2	0.052	0.000	0.055	0.000	0.000	0.065	0.000	0.000	0.052
Gulf Coast	TX	Smith	278.833	278.995	0.162	TX423	Millboro-Boro silty clays, 6 to 9 percent slopes, PA2	0.000	0.000	0.136	0.000	0.000	0.162	0.000	0.129	0.000
Gulf Coast	TX	Smith	278.995	279.081	0.086	TX423	Millboro-Boro silty clays, 6 to 9 percent slopes, PA2	0.000	0.000	0.072	0.086	0.000	0.086	0.000	0.000	0.000
Gulf Coast	TX	Smith	279.081	279.130	0.050	TX423	Millboro-Boro silty clays, 6 to 9 percent slopes, PA2	0.040	0.000	0.042	0.000	0.000	0.050	0.000	0.000	0.040
Gulf Coast	TX	Smith	279.130	279.184	0.054	TX423	Millboro-Boro silty clays, 6 to 9 percent slopes, PA2	0.000	0.000	0.045	0.000	0.038	0.054	0.000	0.000	0.000
Gulf Coast	TX	Smith	279.184	279.332	0.148	TX423	Millboro-Boro silty clays, 6 to 9 percent slopes, PA2	0.119	0.000	0.125	0.000	0.000	0.148	0.000	0.000	0.119
Gulf	TX	Smith	279.332	279.550	0.218	TX423	Millboro-Boro silty clays, 6 to 9 percent slopes, PA2	0.000	0.174	0.183	0.000	0.000	0.218	0.000	0.174	0.000

Appendix K – Soils by Milepost – Gulf Coast Section

Pipeline Segment		County	Beginning Milepost	Ending Milepost	Miles	Soil Series	Soil Series Name	Wind (miles)	water (miles)	Low revegetation potential (miles)	Prime Farmland (miles)	Hydric (miles)	Compaction Prone (miles)	Stony-Rocky (miles)	Shallow Bedrock (miles)	Droughty (miles)
Coast																
Gulf Coast	TX	Smith	279.550	279.684	0.134	TX423	Millboro-Boro silty clays, 6 to 9 percent slopes, PA2	0.000	0.000	0.113	0.000	0.000	0.134	0.000	0.107	0.000
Gulf Coast	TX	Smith	279.684	280.074	0.389	TX423	Millboro-Boro silty clays, 6 to 9 percent slopes, PA2	0.312	0.000	0.327	0.000	0.000	0.389	0.000	0.000	0.312
Gulf Coast	TX	Smith	280.074	280.190	0.116	TX423	Millboro-Boro silty clays, 6 to 9 percent slopes, PA2	0.093	0.093	0.097	0.000	0.000	0.116	0.000	0.093	0.093
Gulf Coast	TX	Smith	280.190	280.337	0.147	TX423	Millboro-Boro silty clays, 6 to 9 percent slopes, PA2	0.118	0.000	0.124	0.000	0.000	0.147	0.000	0.000	0.118
Gulf Coast	TX	Smith	280.337	280.364	0.028	TX423	Millboro-Boro silty clays, 6 to 9 percent slopes, PA2	0.022	0.022	0.023	0.000	0.000	0.028	0.000	0.022	0.022
Gulf Coast	TX	Smith	280.364	280.453	0.089	TX423	Millboro-Boro silty clays, 6 to 9 percent slopes, PA2	0.000	0.000	0.075	0.000	0.062	0.089	0.000	0.000	0.000
Gulf Coast	TX	Smith	280.453	281.335	0.882	TX423	Millboro-Boro silty clays, 6 to 9 percent slopes, PA2	0.706	0.000	0.741	0.000	0.000	0.882	0.000	0.000	0.706
Gulf Coast	TX	Smith	281.335	281.556	0.221	TX423	Millboro-Boro silty clays, 6 to 9 percent slopes, PA2	0.000	0.177	0.186	0.000	0.000	0.221	0.000	0.177	0.000
Gulf Coast	TX	Smith	281.556	281.607	0.051	TX423	Millboro-Boro silty clays, 6 to 9 percent slopes, PA2	0.000	0.000	0.043	0.051	0.000	0.051	0.000	0.000	0.000
Gulf Coast	TX	Smith	281.607	281.717	0.109	TX423	Millboro-Boro silty clays, 6 to 9 percent slopes, PA2	0.000	0.087	0.092	0.000	0.000	0.109	0.000	0.087	0.000
Gulf Coast	TX	Smith	281.717	281.761	0.045	TX423	Millboro-Boro silty clays, 6 to 9 percent slopes, PA2	0.000	0.000	0.037	0.000	0.031	0.045	0.000	0.000	0.000
Gulf Coast	TX	Smith	281.761	281.857	0.096	TX423	Millboro-Boro silty clays, 6 to 9 percent slopes, PA2	0.077	0.077	0.081	0.000	0.000	0.096	0.000	0.077	0.077
Gulf Coast	TX	Smith	281.857	282.347	0.489	TX423	Millboro-Boro silty clays, 6 to 9 percent slopes, PA2	0.000	0.000	0.411	0.000	0.343	0.489	0.000	0.000	0.000
Gulf Coast	TX	Smith	282.347	282.630	0.284	TX423	Millboro-Boro silty clays, 6 to 9 percent slopes, PA2	0.000	0.227	0.238	0.000	0.000	0.284	0.227	0.227	0.000
Gulf Coast	TX	Smith	282.630	282.652	0.022	TX423	Millboro-Boro silty clays, 6 to 9 percent slopes, PA2	0.000	0.000	0.019	0.022	0.000	0.022	0.000	0.000	0.000
Gulf Coast	TX	Smith	282.652	282.734	0.082	TX423	Millboro-Boro silty clays, 6 to 9 percent slopes, PA2	0.070	0.000	0.069	0.000	0.000	0.082	0.000	0.000	0.070
Gulf Coast	TX	Smith	282.734	282.778	0.044	TX423	Millboro-Boro silty clays, 6 to 9 percent slopes, PA2	0.000	0.035	0.037	0.000	0.000	0.044	0.035	0.035	0.000
Gulf Coast	TX	Smith	282.778	282.845	0.067	TX423	Millboro-Boro silty clays, 6 to 9 percent slopes, PA2	0.057	0.000	0.057	0.000	0.000	0.067	0.000	0.000	0.057
Gulf Coast	TX	Smith	282.845	282.951	0.106	TX423	Millboro-Boro silty clays, 6 to 9 percent slopes, PA2	0.085	0.000	0.089	0.000	0.000	0.106	0.000	0.000	0.085
Gulf Coast	TX	Smith	282.951	283.054	0.102	TX423	Millboro-Boro silty clays, 6 to 9 percent slopes, PA2	0.000	0.082	0.086	0.000	0.000	0.102	0.082	0.082	0.000
Gulf Coast	TX	Smith	283.054	283.106	0.052	TX423	Millboro-Boro silty clays, 6 to 9 percent slopes, PA2	0.042	0.042	0.044	0.000	0.000	0.052	0.000	0.042	0.042
Gulf	TX	Smith	283.106	283.135	0.029	TX423	Millboro-Boro silty clays, 6 to 9 percent slopes, PA2	0.000	0.000	0.025	0.029	0.000	0.029	0.000	0.000	0.000

Appendix K – Soils by Milepost – Gulf Coast Section

Pipeline Segment		County	Beginning Milepost	Ending Milepost	Miles	Soil Series	Soil Series Name	Wind (miles)	water (miles)	Low revegetation potential (miles)	Prime Farmland (miles)	Hydric (miles)	Compaction Prone (miles)	Stony-Rocky (miles)	Shallow Bedrock (miles)	Droughty (miles)
Coast																
Gulf Coast	TX	Smith	283.135	283.176	0.041	TX423	Millboro-Boro silty clays, 6 to 9 percent slopes, PA2	0.033	0.033	0.035	0.000	0.000	0.041	0.000	0.033	0.033
Gulf Coast	TX	Smith	283.176	283.388	0.212	TX423	Millboro-Boro silty clays, 6 to 9 percent slopes, PA2	0.170	0.000	0.178	0.000	0.000	0.212	0.000	0.000	0.170
Gulf Coast	TX	Smith	283.388	283.538	0.150	TX423	Millboro-Boro silty clays, 6 to 9 percent slopes, PA2	0.000	0.000	0.126	0.150	0.000	0.150	0.000	0.000	0.000
Gulf Coast	TX	Smith	283.538	283.615	0.077	TX423	Millboro-Boro silty clays, 6 to 9 percent slopes, PA2	0.000	0.000	0.064	0.000	0.000	0.077	0.000	0.061	0.000
Gulf Coast	TX	Smith	283.615	284.749	1.134	TX423	Millboro-Boro silty clays, 6 to 9 percent slopes, PA2	0.907	0.000	0.952	0.000	0.000	1.134	0.000	0.000	0.907
Gulf Coast	TX	Smith	284.749	284.815	0.066	TX423	Millboro-Boro silty clays, 6 to 9 percent slopes, PA2	0.000	0.000	0.055	0.000	0.053	0.066	0.000	0.000	0.000
Gulf Coast	TX	Smith	284.815	285.033	0.218	TX423	Millboro-Boro silty clays, 6 to 9 percent slopes, PA2	0.174	0.000	0.183	0.000	0.000	0.218	0.000	0.000	0.174
Gulf Coast	TX	Smith	285.033	285.274	0.242	TX423	Millboro-Boro silty clays, 6 to 9 percent slopes, PA2	0.193	0.193	0.203	0.000	0.000	0.242	0.000	0.193	0.193
Gulf Coast	TX	Smith	285.274	285.545	0.270	TX423	Millboro-Boro silty clays, 6 to 9 percent slopes, PA2	0.000	0.000	0.227	0.270	0.000	0.270	0.000	0.000	0.000
Gulf Coast	TX	Smith	285.545	285.560	0.015	TX423	Millboro-Boro silty clays, 6 to 9 percent slopes, PA2	0.012	0.000	0.013	0.000	0.000	0.015	0.000	0.000	0.012
Gulf Coast	TX	Smith	285.560	285.678	0.118	TX423	Millboro-Boro silty clays, 6 to 9 percent slopes, PA2	0.000	0.000	0.099	0.118	0.000	0.118	0.000	0.000	0.000
Gulf Coast	TX	Smith	285.678	285.779	0.101	TX423	Millboro-Boro silty clays, 6 to 9 percent slopes, PA2	0.081	0.000	0.085	0.000	0.000	0.101	0.000	0.000	0.081
Gulf Coast	TX	Smith	285.779	285.863	0.084	TX423	Millboro-Boro silty clays, 6 to 9 percent slopes, PA2	0.000	0.000	0.071	0.000	0.000	0.084	0.000	0.067	0.000
Gulf Coast	TX	Smith	285.863	286.003	0.140	TX423	Millboro-Boro silty clays, 6 to 9 percent slopes, PA2	0.000	0.112	0.118	0.000	0.000	0.140	0.112	0.112	0.000
Gulf Coast	TX	Smith	286.003	286.102	0.099	TX423	Millboro-Boro silty clays, 6 to 9 percent slopes, PA2	0.000	0.000	0.083	0.099	0.000	0.099	0.000	0.000	0.000
Gulf Coast	TX	Smith	286.102	286.315	0.213	TX423	Millboro-Boro silty clays, 6 to 9 percent slopes, PA2	0.000	0.170	0.179	0.000	0.000	0.213	0.000	0.170	0.000
Gulf Coast	TX	Smith	286.315	286.394	0.079	TX423	Millboro-Boro silty clays, 6 to 9 percent slopes, PA2	0.063	0.000	0.066	0.000	0.000	0.079	0.000	0.000	0.063
Gulf Coast	TX	Smith	286.394	286.478	0.085	TX423	Millboro-Boro silty clays, 6 to 9 percent slopes, PA2	0.000	0.000	0.071	0.085	0.000	0.085	0.000	0.000	0.000
Gulf Coast	TX	Smith	286.478	286.590	0.111	TX423	Millboro-Boro silty clays, 6 to 9 percent slopes, PA2	0.000	0.000	0.093	0.000	0.000	0.111	0.000	0.000	0.000
Gulf Coast	TX	Smith	286.590	286.670	0.081	TX423	Millboro-Boro silty clays, 6 to 9 percent slopes, PA2	0.000	0.000	0.068	0.081	0.000	0.081	0.000	0.000	0.000
Gulf Coast	TX	Smith	286.670	286.917	0.246	TX423	Millboro-Boro silty clays, 6 to 9 percent slopes, PA2	0.197	0.197	0.207	0.000	0.000	0.246	0.000	0.197	0.197
Gulf	TX	Smith	286.917	287.128	0.211	TX423	Millboro-Boro silty clays, 6 to 9 percent slopes, PA2	0.169	0.000	0.177	0.000	0.000	0.211	0.000	0.000	0.169

Appendix K – Soils by Milepost – Gulf Coast Section

Pipeline Segment		County	Beginning Milepost	Ending Milepost	Miles	Soil Series	Soil Series Name	Wind (miles)	water (miles)	Low revegetation potential (miles)	Prime Farmland (miles)	Hydric (miles)	Compaction Prone (miles)	Stony-Rocky (miles)	Shallow Bedrock (miles)	Droughty (miles)
Coast																
Gulf Coast	TX	Smith	287.128	287.215	0.087	TX423	Millboro-Boro silty clays, 6 to 9 percent slopes, PA2	0.000	0.000	0.073	0.087	0.000	0.087	0.000	0.000	0.000
Gulf Coast	TX	Smith	287.215	287.359	0.144	TX423	Millboro-Boro silty clays, 6 to 9 percent slopes, PA2	0.000	0.000	0.121	0.000	0.000	0.144	0.000	0.000	0.000
Gulf Coast	TX	Smith	287.359	287.411	0.053	TX423	Millboro-Boro silty clays, 6 to 9 percent slopes, PA2	0.000	0.000	0.044	0.053	0.000	0.053	0.000	0.000	0.000
Gulf Coast	TX	Smith	287.411	287.569	0.158	TX423	Millboro-Boro silty clays, 6 to 9 percent slopes, PA2	0.000	0.000	0.133	0.158	0.000	0.158	0.000	0.000	0.000
Gulf Coast	TX	Smith	287.569	287.605	0.036	TX423	Millboro-Boro silty clays, 6 to 9 percent slopes, PA2	0.000	0.000	0.030	0.036	0.000	0.036	0.000	0.000	0.000
Gulf Coast	TX	Smith	287.605	287.701	0.096	TX423	Millboro-Boro silty clays, 6 to 9 percent slopes, PA2	0.000	0.000	0.081	0.096	0.000	0.096	0.000	0.000	0.000
Gulf Coast	TX	Smith	287.701	287.737	0.035	TX423	Millboro-Boro silty clays, 6 to 9 percent slopes, PA2	0.000	0.000	0.030	0.035	0.000	0.035	0.000	0.000	0.000
Gulf Coast	TX	Smith	287.737	287.765	0.028	TX423	Millboro-Boro silty clays, 6 to 9 percent slopes, PA2	0.000	0.000	0.024	0.028	0.000	0.028	0.000	0.000	0.000
Gulf Coast	TX	Smith	287.765	287.862	0.097	TX423	Millboro-Boro silty clays, 6 to 9 percent slopes, PA2	0.000	0.000	0.082	0.000	0.000	0.097	0.000	0.078	0.000
Gulf Coast	TX	Smith	287.862	287.904	0.041	TX423	Millboro-Boro silty clays, 6 to 9 percent slopes, PA2	0.000	0.000	0.035	0.041	0.000	0.041	0.000	0.000	0.000
Gulf Coast	TX	Smith	287.904	287.956	0.053	TX423	Millboro-Boro silty clays, 6 to 9 percent slopes, PA2	0.000	0.042	0.044	0.000	0.000	0.053	0.000	0.042	0.000
Gulf Coast	TX	Smith	287.956	288.036	0.080	TX423	Millboro-Boro silty clays, 6 to 9 percent slopes, PA2	0.000	0.000	0.067	0.080	0.000	0.080	0.000	0.000	0.000
Gulf Coast	TX	Smith	288.036	288.055	0.018	TX423	Millboro-Boro silty clays, 6 to 9 percent slopes, PA2	0.000	0.015	0.015	0.000	0.000	0.018	0.000	0.015	0.000
Gulf Coast	TX	Smith	288.055	288.093	0.038	TX423	Millboro-Boro silty clays, 6 to 9 percent slopes, PA2	0.000	0.000	0.032	0.038	0.000	0.038	0.000	0.000	0.000
Gulf Coast	TX	Smith	288.093	288.148	0.055	TX423	Millboro-Boro silty clays, 6 to 9 percent slopes, PA2	0.000	0.044	0.046	0.000	0.000	0.055	0.000	0.044	0.000
Gulf Coast	TX	Smith	288.148	288.211	0.063	TX423	Millboro-Boro silty clays, 6 to 9 percent slopes, PA2	0.000	0.000	0.053	0.063	0.000	0.063	0.000	0.000	0.000
Gulf Coast	TX	Smith	288.211	288.483	0.273	TX423	Millboro-Boro silty clays, 6 to 9 percent slopes, PA2	0.000	0.218	0.229	0.000	0.000	0.273	0.000	0.218	0.000
Gulf Coast	TX	Smith	288.483	288.598	0.115	TX423	Millboro-Boro silty clays, 6 to 9 percent slopes, PA2	0.000	0.000	0.097	0.000	0.081	0.115	0.000	0.000	0.000
Gulf Coast	TX	Smith	288.598	288.789	0.191	TX423	Millboro-Boro silty clays, 6 to 9 percent slopes, PA2	0.000	0.153	0.160	0.000	0.000	0.191	0.000	0.153	0.000
Gulf Coast	TX	Smith	288.789	288.848	0.059	TX423	Millboro-Boro silty clays, 6 to 9 percent slopes, PA2	0.000	0.000	0.049	0.059	0.000	0.059	0.000	0.000	0.000
Gulf Coast	TX	Smith	288.848	289.061	0.213	TX423	Millboro-Boro silty clays, 6 to 9 percent slopes, PA2	0.000	0.170	0.179	0.000	0.000	0.213	0.000	0.170	0.000
Gulf	TX	Smith	289.061	289.125	0.064	TX423	Millboro-Boro silty clays, 6 to 9 percent slopes, PA2	0.000	0.000	0.054	0.064	0.000	0.064	0.000	0.000	0.000

Appendix K – Soils by Milepost – Gulf Coast Section

Pipeline Segment		County	Beginning Milepost	Ending Milepost	Miles	Soil Series	Soil Series Name	Wind (miles)	water (miles)	Low revegetation potential (miles)	Prime Farmland (miles)	Hydric (miles)	Compaction Prone (miles)	Stony-Rocky (miles)	Shallow Bedrock (miles)	Droughty (miles)
Coast																
Gulf Coast	TX	Smith	289.125	289.255	0.130	TX423	Millboro-Boro silty clays, 6 to 9 percent slopes, PA2	0.000	0.000	0.109	0.000	0.000	0.130	0.000	0.104	0.000
Gulf Coast	TX	Smith	289.255	289.330	0.075	TX423	Millboro-Boro silty clays, 6 to 9 percent slopes, PA2	0.000	0.000	0.063	0.000	0.000	0.075	0.000	0.064	0.064
Gulf Coast	TX	Smith	289.330	289.401	0.071	TX423	Millboro-Boro silty clays, 6 to 9 percent slopes, PA2	0.000	0.000	0.060	0.071	0.000	0.071	0.000	0.000	0.000
Gulf Coast	TX	Smith	289.401	289.475	0.074	TX423	Millboro-Boro silty clays, 6 to 9 percent slopes, PA2	0.000	0.059	0.062	0.000	0.000	0.074	0.000	0.059	0.000
Gulf Coast	TX	Smith	289.475	289.583	0.108	TX423	Millboro-Boro silty clays, 6 to 9 percent slopes, PA2	0.000	0.000	0.091	0.108	0.000	0.108	0.000	0.000	0.000
Gulf Coast	TX	Smith	289.583	289.666	0.083	TX423	Millboro-Boro silty clays, 6 to 9 percent slopes, PA2	0.000	0.066	0.069	0.000	0.000	0.083	0.000	0.066	0.000
Gulf Coast	TX	Smith	289.666	289.708	0.042	TX423	Millboro-Boro silty clays, 6 to 9 percent slopes, PA2	0.000	0.000	0.035	0.000	0.029	0.042	0.000	0.000	0.000
Gulf Coast	TX	Smith	289.708	289.767	0.059	TX423	Millboro-Boro silty clays, 6 to 9 percent slopes, PA2	0.000	0.047	0.050	0.000	0.000	0.059	0.000	0.047	0.000
Gulf Coast	TX	Smith	289.767	289.992	0.225	TX423	Millboro-Boro silty clays, 6 to 9 percent slopes, PA2	0.000	0.000	0.189	0.000	0.000	0.225	0.000	0.180	0.000
Gulf Coast	TX	Smith	289.992	290.069	0.077	TX423	Millboro-Boro silty clays, 6 to 9 percent slopes, PA2	0.000	0.000	0.065	0.077	0.000	0.077	0.000	0.000	0.000
Gulf Coast	TX	Smith	290.069	290.104	0.035	TX423	Millboro-Boro silty clays, 6 to 9 percent slopes, PA2	0.000	0.000	0.029	0.000	0.000	0.035	0.000	0.028	0.000
Gulf Coast	TX	Smith	290.104	290.195	0.091	TX423	Millboro-Boro silty clays, 6 to 9 percent slopes, PA2	0.000	0.073	0.077	0.000	0.000	0.091	0.000	0.073	0.000
Gulf Coast	TX	Smith	290.195	290.217	0.022	TX423	Millboro-Boro silty clays, 6 to 9 percent slopes, PA2	0.000	0.000	0.018	0.000	0.000	0.022	0.000	0.018	0.000
Gulf Coast	TX	Smith	290.217	290.427	0.210	TX423	Millboro-Boro silty clays, 6 to 9 percent slopes, PA2	0.000	0.168	0.176	0.000	0.000	0.210	0.000	0.168	0.000
Gulf Coast	TX	Smith	290.427	290.541	0.114	TX423	Millboro-Boro silty clays, 6 to 9 percent slopes, PA2	0.000	0.000	0.096	0.000	0.080	0.114	0.000	0.000	0.000
Gulf Coast	TX	Smith	290.541	290.621	0.080	TX423	Millboro-Boro silty clays, 6 to 9 percent slopes, PA2	0.000	0.064	0.068	0.000	0.000	0.080	0.000	0.064	0.000
Gulf Coast	TX	Smith	290.621	290.694	0.073	TX423	Millboro-Boro silty clays, 6 to 9 percent slopes, PA2	0.000	0.000	0.061	0.000	0.000	0.073	0.000	0.058	0.000
Gulf Coast	TX	Smith	290.694	290.774	0.080	TX423	Millboro-Boro silty clays, 6 to 9 percent slopes, PA2	0.000	0.064	0.067	0.000	0.000	0.080	0.000	0.064	0.000
Gulf Coast	TX	Smith	290.774	290.975	0.201	TX423	Millboro-Boro silty clays, 6 to 9 percent slopes, PA2	0.000	0.000	0.169	0.000	0.141	0.201	0.000	0.000	0.000
Gulf Coast	TX	Smith	290.975	291.183	0.208	TX423	Millboro-Boro silty clays, 6 to 9 percent slopes, PA2	0.000	0.000	0.175	0.000	0.000	0.208	0.000	0.000	0.000
Gulf Coast	TX	Smith	291.183	291.257	0.074	TX423	Millboro-Boro silty clays, 6 to 9 percent slopes, PA2	0.059	0.000	0.062	0.000	0.000	0.074	0.000	0.000	0.059
Gulf	TX	Smith	291.257	291.277	0.020	TX423	Millboro-Boro silty clays, 6 to 9 percent slopes, PA2	0.000	0.000	0.017	0.000	0.000	0.020	0.000	0.000	0.000

Appendix K – Soils by Milepost – Gulf Coast Section

Pipeline Segment		County	Beginning Milepost	Ending Milepost	Miles	Soil Series	Soil Series Name	Wind (miles)	water (miles)	Low revegetation potential (miles)	Prime Farmland (miles)	Hydric (miles)	Compaction Prone (miles)	Stony-Rocky (miles)	Shallow Bedrock (miles)	Droughty (miles)
Coast																
Gulf Coast	TX	Smith	291.277	291.405	0.129	TX423	Millboro-Boro silty clays, 6 to 9 percent slopes, PA2	0.000	0.000	0.108	0.129	0.000	0.129	0.000	0.000	0.000
Gulf Coast	TX	Smith	291.405	291.482	0.077	TX423	Millboro-Boro silty clays, 6 to 9 percent slopes, PA2	0.062	0.000	0.065	0.000	0.000	0.077	0.000	0.000	0.062
Gulf Coast	TX	Smith	291.482	291.522	0.040	TX423	Millboro-Boro silty clays, 6 to 9 percent slopes, PA2	0.000	0.000	0.034	0.040	0.000	0.040	0.000	0.000	0.000
Gulf Coast	TX	Smith	291.522	291.608	0.085	TX423	Millboro-Boro silty clays, 6 to 9 percent slopes, PA2	0.068	0.000	0.071	0.000	0.000	0.085	0.000	0.000	0.068
Gulf Coast	TX	Smith	291.608	291.703	0.096	TX423	Millboro-Boro silty clays, 6 to 9 percent slopes, PA2	0.000	0.000	0.081	0.000	0.067	0.096	0.000	0.000	0.000
Gulf Coast	TX	Smith	291.703	291.739	0.036	TX423	Millboro-Boro silty clays, 6 to 9 percent slopes, PA2	0.000	0.028	0.030	0.000	0.000	0.036	0.000	0.028	0.000
Gulf Coast	TX	Cherokee	291.739	291.844	0.106	TX073	Millboro-Boro silty clays, 6 to 9 percent slopes, PA2	0.106	0.000	0.089	0.000	0.000	0.106	0.000	0.000	0.106
Gulf Coast	TX	Cherokee	291.844	291.968	0.123	TX073	Millboro-Boro silty clays, 6 to 9 percent slopes, PA2	0.123	0.000	0.103	0.000	0.000	0.123	0.000	0.000	0.123
Gulf Coast	TX	Cherokee	291.968	292.012	0.044	TX073	Millboro-Boro silty clays, 6 to 9 percent slopes, PA2	0.044	0.000	0.037	0.000	0.000	0.044	0.000	0.000	0.044
Gulf Coast	TX	Cherokee	292.012	292.036	0.024	TX073	Millboro-Boro silty clays, 6 to 9 percent slopes, PA2	0.000	0.000	0.020	0.024	0.000	0.024	0.000	0.000	0.024
Gulf Coast	TX	Cherokee	292.036	292.065	0.029	TX073	Millboro-Boro silty clays, 6 to 9 percent slopes, PA2	0.000	0.000	0.025	0.000	0.000	0.029	0.000	0.000	0.000
Gulf Coast	TX	Cherokee	292.065	292.101	0.036	TX073	Millboro-Boro silty clays, 6 to 9 percent slopes, PA2	0.036	0.000	0.030	0.000	0.000	0.036	0.000	0.000	0.036
Gulf Coast	TX	Cherokee	292.101	292.218	0.116	TX073	Millboro-Boro silty clays, 6 to 9 percent slopes, PA2	0.116	0.000	0.098	0.000	0.000	0.116	0.000	0.000	0.116
Gulf Coast	TX	Cherokee	292.218	292.404	0.186	TX073	Millboro-Boro silty clays, 6 to 9 percent slopes, PA2	0.186	0.000	0.156	0.000	0.000	0.186	0.000	0.000	0.186
Gulf Coast	TX	Cherokee	292.404	292.453	0.049	TX073	Millboro-Boro silty clays, 6 to 9 percent slopes, PA2	0.049	0.000	0.041	0.000	0.000	0.049	0.000	0.000	0.049
Gulf Coast	TX	Cherokee	292.453	292.502	0.049	TX073	Millboro-Boro silty clays, 6 to 9 percent slopes, PA2	0.000	0.000	0.041	0.000	0.000	0.049	0.000	0.000	0.000
Gulf Coast	TX	Cherokee	292.502	292.548	0.046	TX073	Millboro-Boro silty clays, 6 to 9 percent slopes, PA2	0.046	0.000	0.039	0.000	0.000	0.046	0.000	0.000	0.046
Gulf Coast	TX	Cherokee	292.548	292.668	0.120	TX073	Millboro-Boro silty clays, 6 to 9 percent slopes, PA2	0.120	0.000	0.101	0.000	0.000	0.120	0.000	0.000	0.120
Gulf Coast	TX	Cherokee	292.668	292.702	0.034	TX073	Millboro-Boro silty clays, 6 to 9 percent slopes, PA2	0.034	0.000	0.029	0.000	0.000	0.034	0.000	0.000	0.034
Gulf Coast	TX	Cherokee	292.702	292.730	0.028	TX073	Millboro-Boro silty clays, 6 to 9 percent slopes, PA2	0.000	0.000	0.023	0.000	0.025	0.028	0.025	0.000	0.000
Gulf Coast	TX	Cherokee	292.730	292.787	0.057	TX073	Millboro-Boro silty clays, 6 to 9 percent slopes, PA2	0.057	0.000	0.048	0.000	0.000	0.057	0.000	0.000	0.057
Gulf	TX	Cheroke	292.787	292.846	0.059	TX073	Millboro-Boro silty clays, 6 to 9 percent slopes, PA2	0.000	0.000	0.049	0.000	0.053	0.059	0.053	0.000	0.000

Appendix K – Soils by Milepost – Gulf Coast Section

Pipeline Segment		County	Beginning Milepost	Ending Milepost	Miles	Soil Series	Soil Series Name	Wind (miles)	water (miles)	Low revegetation potential (miles)	Prime Farmland (miles)	Hydric (miles)	Compaction Prone (miles)	Stony-Rocky (miles)	Shallow Bedrock (miles)	Droughty (miles)
Coast		e														
Gulf Coast	TX	Cherokee	292.846	292.913	0.067	TX073	Millboro-Boro silty clays, 6 to 9 percent slopes, PA2	0.067	0.000	0.056	0.000	0.000	0.067	0.000	0.000	0.067
Gulf Coast	TX	Cherokee	292.913	293.159	0.247	TX073	Millboro-Boro silty clays, 6 to 9 percent slopes, PA2	0.000	0.000	0.207	0.000	0.000	0.247	0.000	0.000	0.000
Gulf Coast	TX	Cherokee	293.159	293.172	0.013	TX073	Millboro-Boro silty clays, 6 to 9 percent slopes, PA2	0.000	0.000	0.011	0.000	0.000	0.013	0.000	0.000	0.013
Gulf Coast	TX	Cherokee	293.172	293.209	0.037	TX073	Millboro-Boro silty clays, 6 to 9 percent slopes, PA2	0.037	0.000	0.031	0.000	0.000	0.037	0.000	0.000	0.037
Gulf Coast	TX	Cherokee	293.209	293.417	0.208	TX073	Millboro-Boro silty clays, 6 to 9 percent slopes, PA2	0.000	0.000	0.175	0.000	0.000	0.208	0.000	0.000	0.208
Gulf Coast	TX	Cherokee	293.417	293.456	0.039	TX073	Millboro-Boro silty clays, 6 to 9 percent slopes, PA2	0.039	0.000	0.032	0.000	0.000	0.039	0.000	0.000	0.039
Gulf Coast	TX	Cherokee	293.456	293.457	0.001	TX073	Millboro-Boro silty clays, 6 to 9 percent slopes, PA2	0.000	0.000	0.001	0.000	0.000	0.001	0.000	0.000	0.001
Gulf Coast	TX	Cherokee	293.457	293.545	0.088	TX073	Millboro-Boro silty clays, 6 to 9 percent slopes, PA2	0.000	0.000	0.074	0.000	0.000	0.088	0.000	0.000	0.000
Gulf Coast	TX	Cherokee	293.545	293.610	0.065	TX073	Millboro-Boro silty clays, 6 to 9 percent slopes, PA2	0.000	0.000	0.054	0.000	0.000	0.065	0.000	0.000	0.065
Gulf Coast	TX	Cherokee	293.610	293.667	0.058	TX073	Millboro-Boro silty clays, 6 to 9 percent slopes, PA2	0.000	0.000	0.048	0.000	0.052	0.058	0.052	0.000	0.000
Gulf Coast	TX	Cherokee	293.667	293.680	0.013	TX073	Millboro-Boro silty clays, 6 to 9 percent slopes, PA2	0.000	0.000	0.011	0.000	0.000	0.013	0.000	0.000	0.000
Gulf Coast	TX	Cherokee	293.680	293.733	0.053	TX073	Millboro-Boro silty clays, 6 to 9 percent slopes, PA2	0.053	0.000	0.045	0.000	0.000	0.053	0.000	0.000	0.053
Gulf Coast	TX	Cherokee	293.733	293.935	0.202	TX073	Millboro-Boro silty clays, 6 to 9 percent slopes, PA2	0.000	0.000	0.170	0.000	0.000	0.202	0.000	0.000	0.000
Gulf Coast	TX	Cherokee	293.935	293.953	0.018	TX073	Millboro-Boro silty clays, 6 to 9 percent slopes, PA2	0.018	0.000	0.015	0.000	0.000	0.018	0.000	0.000	0.018
Gulf Coast	TX	Cherokee	293.953	293.998	0.045	TX073	Millboro-Boro silty clays, 6 to 9 percent slopes, PA2	0.000	0.000	0.038	0.000	0.000	0.045	0.000	0.000	0.000
Gulf Coast	TX	Cherokee	293.998	294.079	0.081	TX073	Millboro-Boro silty clays, 6 to 9 percent slopes, PA2	0.081	0.000	0.068	0.000	0.000	0.081	0.000	0.000	0.081
Gulf Coast	TX	Cherokee	294.079	294.152	0.074	TX073	Millboro-Boro silty clays, 6 to 9 percent slopes, PA2	0.074	0.000	0.062	0.000	0.000	0.074	0.000	0.000	0.074
Gulf Coast	TX	Cherokee	294.152	294.356	0.204	TX073	Millboro-Boro silty clays, 6 to 9 percent slopes, PA2	0.204	0.000	0.171	0.000	0.000	0.204	0.000	0.000	0.204
Gulf Coast	TX	Cherokee	294.356	294.514	0.158	TX073	Millboro-Boro silty clays, 6 to 9 percent slopes, PA2	0.158	0.000	0.133	0.000	0.000	0.158	0.000	0.000	0.158
Gulf Coast	TX	Cherokee	294.514	294.578	0.064	TX073	Millboro-Boro silty clays, 6 to 9 percent slopes, PA2	0.064	0.000	0.054	0.000	0.000	0.064	0.000	0.000	0.064
Gulf Coast	TX	Cherokee	294.578	294.624	0.046	TX073	Millboro-Boro silty clays, 6 to 9 percent slopes, PA2	0.046	0.000	0.039	0.000	0.000	0.046	0.000	0.000	0.046
Gulf	TX	Cheroke	294.624	294.754	0.130	TX073	Millboro-Boro silty clays, 6 to 9 percent slopes, PA2	0.130	0.000	0.109	0.000	0.000	0.130	0.000	0.000	0.130

Appendix K – Soils by Milepost – Gulf Coast Section

Pipeline Segment		County	Beginning Milepost	Ending Milepost	Miles	Soil Series	Soil Series Name	Wind (miles)	water (miles)	Low revegetation potential (miles)	Prime Farmland (miles)	Hydric (miles)	Compaction Prone (miles)	Stony-Rocky (miles)	Shallow Bedrock (miles)	Droughty (miles)
Coast		e														
Gulf Coast	TX	Cherokee	294.754	294.768	0.014	TX073	Millboro-Boro silty clays, 6 to 9 percent slopes, PA2	0.014	0.000	0.012	0.000	0.000	0.014	0.000	0.000	0.014
Gulf Coast	TX	Cherokee	294.768	294.815	0.048	TX073	Millboro-Boro silty clays, 6 to 9 percent slopes, PA2	0.048	0.000	0.040	0.000	0.000	0.048	0.000	0.000	0.048
Gulf Coast	TX	Cherokee	294.815	294.868	0.053	TX073	Millboro-Boro silty clays, 6 to 9 percent slopes, PA2	0.053	0.000	0.044	0.000	0.000	0.053	0.000	0.000	0.053
Gulf Coast	TX	Cherokee	294.868	294.926	0.058	TX073	Millboro-Boro silty clays, 6 to 9 percent slopes, PA2	0.058	0.000	0.049	0.000	0.000	0.058	0.000	0.000	0.058
Gulf Coast	TX	Cherokee	294.926	294.993	0.067	TX073	Millboro-Boro silty clays, 6 to 9 percent slopes, PA2	0.067	0.000	0.056	0.000	0.000	0.067	0.000	0.000	0.067
Gulf Coast	TX	Cherokee	294.993	295.014	0.020	TX073	Millboro-Boro silty clays, 6 to 9 percent slopes, PA2	0.020	0.000	0.017	0.000	0.000	0.020	0.000	0.000	0.020
Gulf Coast	TX	Cherokee	295.014	295.204	0.190	TX073	Millboro-Boro silty clays, 6 to 9 percent slopes, PA2	0.190	0.000	0.160	0.000	0.000	0.190	0.000	0.000	0.190
Gulf Coast	TX	Cherokee	295.204	295.408	0.205	TX073	Millboro-Boro silty clays, 6 to 9 percent slopes, PA2	0.205	0.000	0.172	0.000	0.000	0.205	0.000	0.000	0.205
Gulf Coast	TX	Cherokee	295.408	295.458	0.049	TX073	Millboro-Boro silty clays, 6 to 9 percent slopes, PA2	0.000	0.000	0.041	0.000	0.000	0.049	0.000	0.000	0.000
Gulf Coast	TX	Cherokee	295.458	295.635	0.178	TX073	Millboro-Boro silty clays, 6 to 9 percent slopes, PA2	0.178	0.000	0.149	0.000	0.000	0.178	0.000	0.000	0.178
Gulf Coast	TX	Cherokee	295.635	295.744	0.109	TX073	Millboro-Boro silty clays, 6 to 9 percent slopes, PA2	0.109	0.000	0.092	0.000	0.000	0.109	0.000	0.000	0.109
Gulf Coast	TX	Cherokee	295.744	295.787	0.043	TX073	Millboro-Boro silty clays, 6 to 9 percent slopes, PA2	0.000	0.000	0.036	0.000	0.000	0.043	0.000	0.043	0.000
Gulf Coast	TX	Cherokee	295.787	295.861	0.074	TX073	Millboro-Boro silty clays, 6 to 9 percent slopes, PA2	0.000	0.000	0.062	0.000	0.000	0.074	0.000	0.074	0.000
Gulf Coast	TX	Cherokee	295.861	295.971	0.110	TX073	Millboro-Boro silty clays, 6 to 9 percent slopes, PA2	0.000	0.000	0.093	0.000	0.099	0.110	0.099	0.000	0.000
Gulf Coast	TX	Cherokee	295.971	296.085	0.114	TX073	Millboro-Boro silty clays, 6 to 9 percent slopes, PA2	0.000	0.000	0.096	0.000	0.000	0.114	0.000	0.114	0.000
Gulf Coast	TX	Cherokee	296.085	296.125	0.041	TX073	Millboro-Boro silty clays, 6 to 9 percent slopes, PA2	0.000	0.000	0.034	0.000	0.000	0.041	0.000	0.000	0.000
Gulf Coast	TX	Cherokee	296.125	296.193	0.068	TX073	Millboro-Boro silty clays, 6 to 9 percent slopes, PA2	0.068	0.000	0.057	0.000	0.000	0.068	0.000	0.000	0.068
Gulf Coast	TX	Cherokee	296.193	296.302	0.110	TX073	Millboro-Boro silty clays, 6 to 9 percent slopes, PA2	0.110	0.000	0.092	0.000	0.000	0.110	0.000	0.000	0.110
Gulf Coast	TX	Cherokee	296.302	296.408	0.106	TX073	Millboro-Boro silty clays, 6 to 9 percent slopes, PA2	0.106	0.000	0.089	0.000	0.000	0.106	0.000	0.000	0.106
Gulf Coast	TX	Cherokee	296.408	296.500	0.092	TX073	Millboro-Boro silty clays, 6 to 9 percent slopes, PA2	0.092	0.000	0.077	0.000	0.000	0.092	0.000	0.000	0.092
Gulf Coast	TX	Cherokee	296.500	296.507	0.007	TX073	Millboro-Boro silty clays, 6 to 9 percent slopes, PA2	0.007	0.000	0.006	0.000	0.000	0.007	0.000	0.000	0.007
Gulf	TX	Cheroke	296.507	296.640	0.133	TX073	Millboro-Boro silty clays, 6 to 9 percent slopes, PA2	0.133	0.000	0.111	0.000	0.000	0.133	0.000	0.000	0.133

Appendix K – Soils by Milepost – Gulf Coast Section

Pipeline Segment		County	Beginning Milepost	Ending Milepost	Miles	Soil Series	Soil Series Name	Wind (miles)	water (miles)	Low revegetation potential (miles)	Prime Farmland (miles)	Hydric (miles)	Compaction Prone (miles)	Stony-Rocky (miles)	Shallow Bedrock (miles)	Droughty (miles)
Coast		e														
Gulf Coast	TX	Cherokee	296.640	296.990	0.350	TX073	Millboro-Boro silty clays, 6 to 9 percent slopes, PA2	0.350	0.000	0.294	0.000	0.000	0.350	0.000	0.000	0.350
Gulf Coast	TX	Cherokee	296.990	297.067	0.077	TX073	Millboro-Boro silty clays, 6 to 9 percent slopes, PA2	0.000	0.000	0.065	0.000	0.076	0.077	0.000	0.000	0.000
Gulf Coast	TX	Cherokee	297.067	297.114	0.047	TX073	Millboro-Boro silty clays, 6 to 9 percent slopes, PA2	0.076	0.038	0.040	0.000	0.000	0.047	0.000	0.038	0.038
Gulf Coast	TX	Cherokee	297.114	297.186	0.072	TX073	Millboro-Boro silty clays, 6 to 9 percent slopes, PA2	0.072	0.000	0.061	0.000	0.000	0.072	0.000	0.000	0.072
Gulf Coast	TX	Cherokee	297.186	297.224	0.038	TX073	Millboro-Boro silty clays, 6 to 9 percent slopes, PA2	0.038	0.000	0.032	0.000	0.000	0.038	0.000	0.000	0.038
Gulf Coast	TX	Cherokee	297.224	297.251	0.026	TX073	Millboro-Boro silty clays, 6 to 9 percent slopes, PA2	0.000	0.000	0.022	0.000	0.026	0.026	0.000	0.000	0.000
Gulf Coast	TX	Cherokee	297.251	297.346	0.095	TX073	Millboro-Boro silty clays, 6 to 9 percent slopes, PA2	0.095	0.000	0.080	0.000	0.000	0.095	0.000	0.000	0.095
Gulf Coast	TX	Cherokee	297.346	297.380	0.034	TX073	Millboro-Boro silty clays, 6 to 9 percent slopes, PA2	0.000	0.000	0.029	0.000	0.033	0.034	0.000	0.000	0.000
Gulf Coast	TX	Cherokee	297.380	297.462	0.083	TX073	Millboro-Boro silty clays, 6 to 9 percent slopes, PA2	0.083	0.000	0.069	0.000	0.000	0.083	0.000	0.000	0.083
Gulf Coast	TX	Cherokee	297.462	297.532	0.070	TX073	Millboro-Boro silty clays, 6 to 9 percent slopes, PA2	0.000	0.000	0.059	0.000	0.069	0.070	0.000	0.000	0.000
Gulf Coast	TX	Cherokee	297.532	297.718	0.186	TX073	Millboro-Boro silty clays, 6 to 9 percent slopes, PA2	0.186	0.000	0.156	0.000	0.000	0.186	0.000	0.000	0.186
Gulf Coast	TX	Cherokee	297.718	297.727	0.009	TX073	Millboro-Boro silty clays, 6 to 9 percent slopes, PA2	0.009	0.000	0.008	0.000	0.000	0.009	0.000	0.000	0.009
Gulf Coast	TX	Cherokee	297.727	297.820	0.093	TX073	Millboro-Boro silty clays, 6 to 9 percent slopes, PA2	0.093	0.000	0.078	0.000	0.000	0.093	0.000	0.000	0.093
Gulf Coast	TX	Cherokee	297.820	297.883	0.063	TX073	Millboro-Boro silty clays, 6 to 9 percent slopes, PA2	0.063	0.000	0.053	0.000	0.000	0.063	0.000	0.000	0.063
Gulf Coast	TX	Cherokee	297.883	297.942	0.058	TX073	Millboro-Boro silty clays, 6 to 9 percent slopes, PA2	0.058	0.000	0.049	0.000	0.000	0.058	0.000	0.000	0.058
Gulf Coast	TX	Cherokee	297.942	298.131	0.189	TX073	Millboro-Boro silty clays, 6 to 9 percent slopes, PA2	0.189	0.000	0.159	0.000	0.000	0.189	0.000	0.000	0.189
Gulf Coast	TX	Cherokee	298.131	298.273	0.142	TX073	Millboro-Boro silty clays, 6 to 9 percent slopes, PA2	0.142	0.000	0.119	0.000	0.000	0.142	0.000	0.000	0.142
Gulf Coast	TX	Cherokee	298.273	298.367	0.094	TX073	Millboro-Boro silty clays, 6 to 9 percent slopes, PA2	0.094	0.000	0.079	0.000	0.000	0.094	0.000	0.000	0.094
Gulf Coast	TX	Cherokee	298.367	298.521	0.154	TX073	Millboro-Boro silty clays, 6 to 9 percent slopes, PA2	0.154	0.000	0.130	0.000	0.000	0.154	0.000	0.000	0.154
Gulf Coast	TX	Cherokee	298.521	298.526	0.004	TX073	Millboro-Boro silty clays, 6 to 9 percent slopes, PA2	0.004	0.000	0.004	0.000	0.000	0.004	0.000	0.000	0.004
Gulf Coast	TX	Cherokee	298.526	298.868	0.343	TX073	Millboro-Boro silty clays, 6 to 9 percent slopes, PA2	0.000	0.000	0.288	0.000	0.000	0.343	0.000	0.000	0.343
Gulf	TX	Cheroke	298.868	298.930	0.062	TX073	Millboro-Boro silty clays, 6 to 9 percent slopes, PA2	0.000	0.000	0.052	0.000	0.000	0.062	0.000	0.000	0.062

Appendix K – Soils by Milepost – Gulf Coast Section

Pipeline Segment		County	Beginning Milepost	Ending Milepost	Miles	Soil Series	Soil Series Name	Wind (miles)	water (miles)	Low revegetation potential (miles)	Prime Farmland (miles)	Hydric (miles)	Compaction Prone (miles)	Stony-Rocky (miles)	Shallow Bedrock (miles)	Droughty (miles)
Coast		e														
Gulf Coast	TX	Cherokee	298.930	299.049	0.119	TX073	Millboro-Boro silty clays, 6 to 9 percent slopes, PA2	0.000	0.000	0.100	0.000	0.000	0.119	0.000	0.000	0.119
Gulf Coast	TX	Cherokee	299.049	299.162	0.114	TX073	Millboro-Boro silty clays, 6 to 9 percent slopes, PA2	0.114	0.000	0.095	0.000	0.000	0.114	0.000	0.000	0.114
Gulf Coast	TX	Cherokee	299.162	299.189	0.026	TX073	Millboro-Boro silty clays, 6 to 9 percent slopes, PA2	0.026	0.000	0.022	0.000	0.000	0.026	0.000	0.000	0.026
Gulf Coast	TX	Cherokee	299.189	299.333	0.145	TX073	Millboro-Boro silty clays, 6 to 9 percent slopes, PA2	0.000	0.000	0.122	0.000	0.130	0.145	0.130	0.000	0.000
Gulf Coast	TX	Rusk	299.333	300.073	0.740	TX401	Millboro-Boro silty clays, 6 to 9 percent slopes, PA2	0.000	0.000	0.622	0.000	0.703	0.740	0.000	0.703	0.000
Gulf Coast	TX	Rusk	300.073	300.429	0.356	TX401	Millboro-Boro silty clays, 6 to 9 percent slopes, PA2	0.000	0.000	0.299	0.000	0.000	0.356	0.000	0.000	0.000
Gulf Coast	TX	Rusk	300.429	300.780	0.350	TX401	Millboro-Boro silty clays, 6 to 9 percent slopes, PA2	0.000	0.315	0.294	0.000	0.000	0.350	0.000	0.315	0.000
Gulf Coast	TX	Rusk	300.780	300.940	0.160	TX401	Millboro-Boro silty clays, 6 to 9 percent slopes, PA2	0.000	0.000	0.135	0.160	0.000	0.160	0.000	0.000	0.000
Gulf Coast	TX	Rusk	300.940	301.219	0.279	TX401	Millboro-Boro silty clays, 6 to 9 percent slopes, PA2	0.000	0.000	0.234	0.279	0.000	0.279	0.000	0.000	0.000
Gulf Coast	TX	Rusk	301.219	301.297	0.078	TX401	Millboro-Boro silty clays, 6 to 9 percent slopes, PA2	0.000	0.072	0.065	0.000	0.000	0.078	0.000	0.072	0.000
Gulf Coast	TX	Rusk	301.297	301.480	0.183	TX401	Millboro-Boro silty clays, 6 to 9 percent slopes, PA2	0.000	0.000	0.154	0.000	0.000	0.183	0.000	0.000	0.000
Gulf Coast	TX	Rusk	301.480	301.599	0.120	TX401	Millboro-Boro silty clays, 6 to 9 percent slopes, PA2	0.000	0.000	0.101	0.000	0.000	0.120	0.000	0.110	0.000
Gulf Coast	TX	Rusk	301.599	301.625	0.026	TX401	Millboro-Boro silty clays, 6 to 9 percent slopes, PA2	0.000	0.000	0.022	0.026	0.000	0.026	0.000	0.000	0.000
Gulf Coast	TX	Rusk	301.625	301.730	0.105	TX401	Millboro-Boro silty clays, 6 to 9 percent slopes, PA2	0.000	0.000	0.088	0.000	0.000	0.105	0.000	0.096	0.000
Gulf Coast	TX	Rusk	301.730	301.809	0.079	TX401	Millboro-Boro silty clays, 6 to 9 percent slopes, PA2	0.000	0.000	0.067	0.079	0.000	0.079	0.000	0.000	0.000
Gulf Coast	TX	Rusk	301.809	301.848	0.039	TX401	Millboro-Boro silty clays, 6 to 9 percent slopes, PA2	0.000	0.036	0.032	0.000	0.000	0.039	0.000	0.036	0.000
Gulf Coast	TX	Rusk	301.848	302.031	0.183	TX401	Millboro-Boro silty clays, 6 to 9 percent slopes, PA2	0.000	0.000	0.154	0.183	0.000	0.183	0.000	0.000	0.000
Gulf Coast	TX	Rusk	302.031	302.117	0.086	TX401	Millboro-Boro silty clays, 6 to 9 percent slopes, PA2	0.000	0.079	0.072	0.000	0.000	0.086	0.000	0.079	0.000
Gulf Coast	TX	Rusk	302.117	302.222	0.105	TX401	Millboro-Boro silty clays, 6 to 9 percent slopes, PA2	0.000	0.000	0.089	0.000	0.000	0.105	0.000	0.000	0.000
Gulf Coast	TX	Rusk	302.222	302.329	0.107	TX401	Millboro-Boro silty clays, 6 to 9 percent slopes, PA2	0.000	0.098	0.089	0.000	0.000	0.107	0.000	0.098	0.000
Gulf Coast	TX	Rusk	302.329	302.422	0.093	TX401	Millboro-Boro silty clays, 6 to 9 percent slopes, PA2	0.000	0.000	0.078	0.093	0.000	0.093	0.000	0.000	0.000
Gulf	TX	Rusk	302.422	302.465	0.043	TX401	Millboro-Boro silty clays, 6 to 9 percent slopes, PA2	0.000	0.040	0.036	0.000	0.000	0.043	0.000	0.040	0.000

Appendix K – Soils by Milepost – Gulf Coast Section

Pipeline Segment		County	Beginning Milepost	Ending Milepost	Miles	Soil Series	Soil Series Name	Wind (miles)	water (miles)	Low revegetation potential (miles)	Prime Farmland (miles)	Hydric (miles)	Compaction Prone (miles)	Stony-Rocky (miles)	Shallow Bedrock (miles)	Droughty (miles)
Coast																
Gulf Coast	TX	Rusk	302.465	302.492	0.027	TX401	Millboro-Boro silty clays, 6 to 9 percent slopes, PA2	0.000	0.000	0.023	0.000	0.000	0.027	0.000	0.025	0.000
Gulf Coast	TX	Rusk	302.492	302.598	0.106	TX401	Millboro-Boro silty clays, 6 to 9 percent slopes, PA2	0.000	0.098	0.089	0.000	0.000	0.106	0.000	0.098	0.000
Gulf Coast	TX	Rusk	302.598	302.773	0.174	TX401	Millboro-Boro silty clays, 6 to 9 percent slopes, PA2	0.000	0.000	0.146	0.000	0.000	0.174	0.000	0.160	0.000
Gulf Coast	TX	Rusk	302.773	302.942	0.169	TX401	Millboro-Boro silty clays, 6 to 9 percent slopes, PA2	0.155	0.000	0.142	0.000	0.000	0.169	0.000	0.000	0.155
Gulf Coast	TX	Rusk	302.942	303.218	0.277	TX401	Millboro-Boro silty clays, 6 to 9 percent slopes, PA2	0.000	0.254	0.232	0.000	0.000	0.277	0.000	0.254	0.000
Gulf Coast	TX	Rusk	303.218	303.436	0.218	TX401	Millboro-Boro silty clays, 6 to 9 percent slopes, PA2	0.000	0.000	0.183	0.000	0.000	0.218	0.000	0.200	0.000
Gulf Coast	TX	Rusk	303.436	303.689	0.253	TX401	Millboro-Boro silty clays, 6 to 9 percent slopes, PA2	0.000	0.233	0.213	0.000	0.000	0.253	0.000	0.233	0.000
Gulf Coast	TX	Rusk	303.689	303.852	0.163	TX401	Millboro-Boro silty clays, 6 to 9 percent slopes, PA2	0.000	0.158	0.137	0.000	0.000	0.163	0.158	0.158	0.000
Gulf Coast	TX	Rusk	303.852	304.279	0.426	TX401	Millboro-Boro silty clays, 6 to 9 percent slopes, PA2	0.405	0.000	0.358	0.000	0.000	0.426	0.000	0.000	0.405
Gulf Coast	TX	Rusk	304.279	304.770	0.492	TX401	Millboro-Boro silty clays, 6 to 9 percent slopes, PA2	0.000	0.467	0.413	0.000	0.000	0.492	0.467	0.467	0.000
Gulf Coast	TX	Rusk	304.770	305.061	0.291	TX401	Millboro-Boro silty clays, 6 to 9 percent slopes, PA2	0.268	0.000	0.245	0.000	0.000	0.291	0.000	0.000	0.268
Gulf Coast	TX	Rusk	305.061	305.136	0.074	TX401	Millboro-Boro silty clays, 6 to 9 percent slopes, PA2	0.000	0.071	0.062	0.000	0.000	0.074	0.071	0.071	0.000
Gulf Coast	TX	Rusk	305.136	305.423	0.287	TX401	Millboro-Boro silty clays, 6 to 9 percent slopes, PA2	0.516	0.258	0.241	0.000	0.000	0.287	0.000	0.258	0.258
Gulf Coast	TX	Rusk	305.423	305.535	0.112	TX401	Millboro-Boro silty clays, 6 to 9 percent slopes, PA2	0.106	0.000	0.094	0.000	0.000	0.112	0.000	0.000	0.106
Gulf Coast	TX	Rusk	305.535	305.599	0.064	TX401	Millboro-Boro silty clays, 6 to 9 percent slopes, PA2	0.059	0.000	0.054	0.000	0.000	0.064	0.000	0.000	0.059
Gulf Coast	TX	Rusk	305.599	305.636	0.038	TX401	Millboro-Boro silty clays, 6 to 9 percent slopes, PA2	0.068	0.034	0.032	0.000	0.000	0.038	0.000	0.034	0.034
Gulf Coast	TX	Rusk	305.636	305.700	0.064	TX401	Millboro-Boro silty clays, 6 to 9 percent slopes, PA2	0.059	0.000	0.054	0.000	0.000	0.064	0.000	0.000	0.059
Gulf Coast	TX	Rusk	305.700	306.076	0.376	TX401	Millboro-Boro silty clays, 6 to 9 percent slopes, PA2	0.357	0.000	0.316	0.000	0.000	0.376	0.000	0.000	0.357
Gulf Coast	TX	Rusk	306.076	306.403	0.327	TX401	Millboro-Boro silty clays, 6 to 9 percent slopes, PA2	0.301	0.000	0.275	0.000	0.000	0.327	0.000	0.000	0.301
Gulf Coast	TX	Rusk	306.403	306.619	0.216	TX401	Millboro-Boro silty clays, 6 to 9 percent slopes, PA2	0.000	0.000	0.182	0.216	0.000	0.216	0.000	0.000	0.000
Gulf Coast	TX	Rusk	306.619	306.832	0.213	TX401	Millboro-Boro silty clays, 6 to 9 percent slopes, PA2	0.000	0.000	0.179	0.000	0.000	0.213	0.000	0.000	0.000
Gulf	TX	Rusk	306.832	307.073	0.241	TX401	Millboro-Boro silty clays, 6 to 9 percent slopes, PA2	0.000	0.222	0.203	0.000	0.000	0.241	0.000	0.222	0.000

Appendix K – Soils by Milepost – Gulf Coast Section

Pipeline Segment		County	Beginning Milepost	Ending Milepost	Miles	Soil Series	Soil Series Name	Wind (miles)	water (miles)	Low revegetation potential (miles)	Prime Farmland (miles)	Hydric (miles)	Compaction Prone (miles)	Stony-Rocky (miles)	Shallow Bedrock (miles)	Droughty (miles)
Coast																
Gulf Coast	TX	Rusk	307.073	307.243	0.170	TX401	Millboro-Boro silty clays, 6 to 9 percent slopes, PA2	0.000	0.000	0.142	0.000	0.000	0.170	0.000	0.156	0.000
Gulf Coast	TX	Rusk	307.243	307.451	0.209	TX401	Millboro-Boro silty clays, 6 to 9 percent slopes, PA2	0.000	0.192	0.175	0.000	0.000	0.209	0.000	0.192	0.000
Gulf Coast	TX	Rusk	307.451	307.587	0.136	TX401	Millboro-Boro silty clays, 6 to 9 percent slopes, PA2	0.000	0.000	0.114	0.000	0.000	0.136	0.000	0.000	0.000
Gulf Coast	TX	Rusk	307.587	307.662	0.075	TX401	Millboro-Boro silty clays, 6 to 9 percent slopes, PA2	0.000	0.069	0.063	0.000	0.000	0.075	0.000	0.069	0.000
Gulf Coast	TX	Rusk	307.662	307.879	0.217	TX401	Millboro-Boro silty clays, 6 to 9 percent slopes, PA2	0.000	0.000	0.183	0.217	0.000	0.217	0.000	0.000	0.000
Gulf Coast	TX	Rusk	307.879	307.952	0.073	TX401	Millboro-Boro silty clays, 6 to 9 percent slopes, PA2	0.000	0.067	0.061	0.000	0.000	0.073	0.000	0.067	0.000
Gulf Coast	TX	Rusk	307.952	308.198	0.246	TX401	Millboro-Boro silty clays, 6 to 9 percent slopes, PA2	0.000	0.000	0.207	0.246	0.000	0.246	0.000	0.000	0.000
Gulf Coast	TX	Rusk	308.198	308.321	0.123	TX401	Millboro-Boro silty clays, 6 to 9 percent slopes, PA2	0.000	0.113	0.103	0.000	0.000	0.123	0.000	0.113	0.000
Gulf Coast	TX	Rusk	308.321	308.411	0.090	TX401	Millboro-Boro silty clays, 6 to 9 percent slopes, PA2	0.000	0.000	0.075	0.090	0.000	0.090	0.000	0.000	0.000
Gulf Coast	TX	Rusk	308.411	308.532	0.121	TX401	Millboro-Boro silty clays, 6 to 9 percent slopes, PA2	0.000	0.111	0.102	0.000	0.000	0.121	0.000	0.111	0.000
Gulf Coast	TX	Rusk	308.532	308.736	0.205	TX401	Millboro-Boro silty clays, 6 to 9 percent slopes, PA2	0.188	0.000	0.172	0.000	0.000	0.205	0.000	0.000	0.188
Gulf Coast	TX	Rusk	308.736	308.868	0.132	TX401	Millboro-Boro silty clays, 6 to 9 percent slopes, PA2	0.000	0.119	0.111	0.000	0.000	0.132	0.000	0.119	0.000
Gulf Coast	TX	Rusk	308.868	308.941	0.072	TX401	Millboro-Boro silty clays, 6 to 9 percent slopes, PA2	0.000	0.000	0.061	0.072	0.000	0.072	0.000	0.000	0.000
Gulf Coast	TX	Rusk	308.941	309.033	0.093	TX401	Millboro-Boro silty clays, 6 to 9 percent slopes, PA2	0.000	0.083	0.078	0.000	0.000	0.093	0.000	0.083	0.000
Gulf Coast	TX	Rusk	309.033	309.236	0.203	TX401	Millboro-Boro silty clays, 6 to 9 percent slopes, PA2	0.000	0.000	0.170	0.203	0.000	0.203	0.000	0.000	0.000
Gulf Coast	TX	Rusk	309.236	309.465	0.230	TX401	Millboro-Boro silty clays, 6 to 9 percent slopes, PA2	0.000	0.000	0.193	0.000	0.000	0.230	0.000	0.211	0.000
Gulf Coast	TX	Rusk	309.465	309.589	0.123	TX401	Millboro-Boro silty clays, 6 to 9 percent slopes, PA2	0.000	0.000	0.103	0.000	0.000	0.123	0.000	0.113	0.000
Gulf Coast	TX	Rusk	309.589	309.657	0.069	TX401	Millboro-Boro silty clays, 6 to 9 percent slopes, PA2	0.000	0.063	0.058	0.000	0.000	0.069	0.000	0.063	0.000
Gulf Coast	TX	Rusk	309.657	310.914	1.257	TX401	Millboro-Boro silty clays, 6 to 9 percent slopes, PA2	0.000	0.000	1.056	0.000	1.068	1.257	0.000	0.000	0.000
Gulf Coast	TX	Rusk	310.914	310.981	0.067	TX401	Millboro-Boro silty clays, 6 to 9 percent slopes, PA2	0.000	0.000	0.057	0.000	0.064	0.067	0.000	0.064	0.000
Gulf Coast	TX	Rusk	310.981	311.938	0.957	TX401	Millboro-Boro silty clays, 6 to 9 percent slopes, PA2	0.000	0.000	0.804	0.000	0.813	0.957	0.000	0.000	0.000
Gulf	TX	Rusk	311.938	311.996	0.058	TX401	Millboro-Boro silty clays, 6 to 9 percent slopes, PA2	0.000	0.000	0.048	0.058	0.000	0.058	0.000	0.000	0.000

Appendix K – Soils by Milepost – Gulf Coast Section

Pipeline Segment		County	Beginning Milepost	Ending Milepost	Miles	Soil Series	Soil Series Name	Wind (miles)	water (miles)	Low revegetation potential (miles)	Prime Farmland (miles)	Hydric (miles)	Compaction Prone (miles)	Stony-Rocky (miles)	Shallow Bedrock (miles)	Droughty (miles)
Coast																
Gulf Coast	TX	Rusk	311.996	312.002	0.007	TX401	Millboro-Boro silty clays, 6 to 9 percent slopes, PA2	0.000	0.000	0.006	0.000	0.006	0.007	0.000	0.000	0.000
Gulf Coast	TX	Rusk	312.002	312.044	0.042	TX401	Millboro-Boro silty clays, 6 to 9 percent slopes, PA2	0.000	0.000	0.035	0.042	0.000	0.042	0.000	0.000	0.000
Gulf Coast	TX	Rusk	312.044	312.079	0.035	TX401	Millboro-Boro silty clays, 6 to 9 percent slopes, PA2	0.000	0.000	0.029	0.000	0.030	0.035	0.000	0.000	0.000
Gulf Coast	TX	Rusk	312.079	312.323	0.244	TX401	Millboro-Boro silty clays, 6 to 9 percent slopes, PA2	0.000	0.000	0.205	0.244	0.000	0.244	0.000	0.000	0.000
Gulf Coast	TX	Rusk	312.323	312.388	0.065	TX401	Millboro-Boro silty clays, 6 to 9 percent slopes, PA2	0.000	0.059	0.055	0.000	0.000	0.065	0.000	0.059	0.000
Gulf Coast	TX	Rusk	312.388	312.571	0.183	TX401	Millboro-Boro silty clays, 6 to 9 percent slopes, PA2	0.000	0.000	0.153	0.000	0.000	0.183	0.000	0.168	0.000
Gulf Coast	TX	Rusk	312.571	312.696	0.125	TX401	Millboro-Boro silty clays, 6 to 9 percent slopes, PA2	0.000	0.113	0.105	0.000	0.000	0.125	0.000	0.113	0.000
Gulf Coast	TX	Rusk	312.696	312.757	0.061	TX401	Millboro-Boro silty clays, 6 to 9 percent slopes, PA2	0.000	0.000	0.052	0.061	0.000	0.061	0.000	0.000	0.000
Gulf Coast	TX	Rusk	312.757	312.811	0.054	TX401	Millboro-Boro silty clays, 6 to 9 percent slopes, PA2	0.000	0.000	0.045	0.000	0.000	0.054	0.000	0.049	0.000
Gulf Coast	TX	Nacogdoches	312.811	312.965	0.155	TX347	Millboro-Boro silty clays, 6 to 9 percent slopes, PA2	0.000	0.000	0.130	0.000	0.000	0.155	0.000	0.116	0.000
Gulf Coast	TX	Nacogdoches	312.965	313.177	0.212	TX347	Millboro-Boro silty clays, 6 to 9 percent slopes, PA2	0.000	0.000	0.178	0.212	0.000	0.212	0.000	0.000	0.000
Gulf Coast	TX	Nacogdoches	313.177	313.189	0.012	TX347	Millboro-Boro silty clays, 6 to 9 percent slopes, PA2	0.000	0.000	0.010	0.000	0.000	0.012	0.000	0.009	0.000
Gulf Coast	TX	Nacogdoches	313.189	313.256	0.067	TX347	Millboro-Boro silty clays, 6 to 9 percent slopes, PA2	0.000	0.000	0.057	0.067	0.000	0.067	0.000	0.000	0.000
Gulf Coast	TX	Nacogdoches	313.256	313.423	0.167	TX347	Millboro-Boro silty clays, 6 to 9 percent slopes, PA2	0.000	0.134	0.141	0.000	0.000	0.167	0.000	0.134	0.134
Gulf Coast	TX	Nacogdoches	313.423	313.530	0.107	TX347	Millboro-Boro silty clays, 6 to 9 percent slopes, PA2	0.000	0.000	0.090	0.107	0.000	0.107	0.000	0.000	0.000
Gulf Coast	TX	Nacogdoches	313.530	313.595	0.065	TX347	Millboro-Boro silty clays, 6 to 9 percent slopes, PA2	0.000	0.000	0.054	0.000	0.000	0.065	0.000	0.052	0.000
Gulf Coast	TX	Nacogdoches	313.595	313.665	0.071	TX347	Millboro-Boro silty clays, 6 to 9 percent slopes, PA2	0.000	0.000	0.059	0.000	0.000	0.071	0.000	0.053	0.000
Gulf Coast	TX	Nacogdoches	313.665	313.686	0.021	TX347	Millboro-Boro silty clays, 6 to 9 percent slopes, PA2	0.000	0.000	0.017	0.021	0.000	0.021	0.000	0.000	0.000
Gulf Coast	TX	Nacogdoches	313.686	314.057	0.371	TX347	Millboro-Boro silty clays, 6 to 9 percent slopes, PA2	0.000	0.000	0.312	0.000	0.000	0.371	0.000	0.278	0.000
Gulf Coast	TX	Nacogdoches	314.057	314.172	0.115	TX347	Millboro-Boro silty clays, 6 to 9 percent slopes, PA2	0.000	0.000	0.097	0.115	0.000	0.115	0.000	0.000	0.000
Gulf Coast	TX	Nacogdoches	314.172	314.279	0.107	TX347	Millboro-Boro silty clays, 6 to 9 percent slopes, PA2	0.000	0.000	0.089	0.000	0.000	0.107	0.000	0.085	0.000
Gulf	TX	Nacogdo	314.279	314.345	0.066	TX347	Millboro-Boro silty clays, 6 to 9 percent slopes, PA2	0.000	0.000	0.055	0.000	0.000	0.066	0.000	0.000	0.000

Appendix K – Soils by Milepost – Gulf Coast Section

Pipeline Segment		County	Beginning Milepost	Ending Milepost	Miles	Soil Series	Soil Series Name	Wind (miles)	water (miles)	Low revegetation potential (miles)	Prime Farmland (miles)	Hydric (miles)	Compaction Prone (miles)	Stony-Rocky (miles)	Shallow Bedrock (miles)	Droughty (miles)
Coast		ches														
Gulf Coast	TX	Nacogdoches	314.345	314.522	0.178	TX347	Millboro-Boro silty clays, 6 to 9 percent slopes, PA2	0.000	0.142	0.149	0.000	0.000	0.178	0.000	0.142	0.000
Gulf Coast	TX	Nacogdoches	314.522	314.544	0.022	TX347	Millboro-Boro silty clays, 6 to 9 percent slopes, PA2	0.000	0.000	0.019	0.000	0.000	0.022	0.000	0.017	0.000
Gulf Coast	TX	Nacogdoches	314.544	314.562	0.018	TX347	Millboro-Boro silty clays, 6 to 9 percent slopes, PA2	0.000	0.014	0.015	0.000	0.000	0.018	0.000	0.014	0.000
Gulf Coast	TX	Nacogdoches	314.562	314.590	0.028	TX347	Millboro-Boro silty clays, 6 to 9 percent slopes, PA2	0.000	0.000	0.024	0.028	0.000	0.028	0.000	0.000	0.000
Gulf Coast	TX	Nacogdoches	314.590	314.640	0.050	TX347	Millboro-Boro silty clays, 6 to 9 percent slopes, PA2	0.000	0.040	0.042	0.000	0.000	0.050	0.000	0.040	0.000
Gulf Coast	TX	Nacogdoches	314.640	314.805	0.165	TX347	Millboro-Boro silty clays, 6 to 9 percent slopes, PA2	0.000	0.000	0.138	0.165	0.000	0.165	0.000	0.000	0.000
Gulf Coast	TX	Nacogdoches	314.805	314.859	0.054	TX347	Millboro-Boro silty clays, 6 to 9 percent slopes, PA2	0.000	0.043	0.045	0.000	0.000	0.054	0.000	0.043	0.000
Gulf Coast	TX	Nacogdoches	314.859	315.286	0.427	TX347	Millboro-Boro silty clays, 6 to 9 percent slopes, PA2	0.000	0.000	0.359	0.000	0.000	0.427	0.000	0.000	0.000
Gulf Coast	TX	Nacogdoches	315.286	315.327	0.041	TX347	Millboro-Boro silty clays, 6 to 9 percent slopes, PA2	0.000	0.032	0.034	0.000	0.000	0.041	0.000	0.032	0.000
Gulf Coast	TX	Nacogdoches	315.327	315.381	0.055	TX347	Millboro-Boro silty clays, 6 to 9 percent slopes, PA2	0.044	0.044	0.046	0.000	0.000	0.055	0.000	0.000	0.044
Gulf Coast	TX	Nacogdoches	315.381	315.415	0.033	TX347	Millboro-Boro silty clays, 6 to 9 percent slopes, PA2	0.027	0.000	0.028	0.000	0.000	0.033	0.000	0.000	0.027
Gulf Coast	TX	Nacogdoches	315.415	315.462	0.048	TX347	Millboro-Boro silty clays, 6 to 9 percent slopes, PA2	0.038	0.038	0.040	0.000	0.000	0.048	0.000	0.000	0.038
Gulf Coast	TX	Nacogdoches	315.462	315.598	0.136	TX347	Millboro-Boro silty clays, 6 to 9 percent slopes, PA2	0.000	0.108	0.114	0.000	0.000	0.136	0.000	0.108	0.000
Gulf Coast	TX	Nacogdoches	315.598	315.669	0.071	TX347	Millboro-Boro silty clays, 6 to 9 percent slopes, PA2	0.000	0.000	0.059	0.000	0.000	0.071	0.000	0.053	0.000
Gulf Coast	TX	Nacogdoches	315.669	315.701	0.032	TX347	Millboro-Boro silty clays, 6 to 9 percent slopes, PA2	0.000	0.026	0.027	0.000	0.000	0.032	0.000	0.026	0.000
Gulf Coast	TX	Nacogdoches	315.701	315.734	0.033	TX347	Millboro-Boro silty clays, 6 to 9 percent slopes, PA2	0.000	0.000	0.028	0.000	0.000	0.033	0.000	0.025	0.000
Gulf Coast	TX	Nacogdoches	315.734	315.751	0.017	TX347	Millboro-Boro silty clays, 6 to 9 percent slopes, PA2	0.000	0.014	0.014	0.000	0.000	0.017	0.000	0.014	0.000
Gulf Coast	TX	Nacogdoches	315.751	315.781	0.030	TX347	Millboro-Boro silty clays, 6 to 9 percent slopes, PA2	0.000	0.000	0.025	0.000	0.000	0.030	0.000	0.023	0.000
Gulf Coast	TX	Nacogdoches	315.781	315.849	0.067	TX347	Millboro-Boro silty clays, 6 to 9 percent slopes, PA2	0.000	0.054	0.056	0.000	0.000	0.067	0.000	0.054	0.000
Gulf Coast	TX	Nacogdoches	315.849	315.918	0.069	TX347	Millboro-Boro silty clays, 6 to 9 percent slopes, PA2	0.056	0.000	0.058	0.000	0.000	0.069	0.000	0.000	0.056
Gulf Coast	TX	Nacogdoches	315.918	315.972	0.054	TX347	Millboro-Boro silty clays, 6 to 9 percent slopes, PA2	0.000	0.043	0.045	0.000	0.000	0.054	0.000	0.043	0.000
Gulf	TX	Nacogdo	315.972	316.140	0.169	TX347	Millboro-Boro silty clays, 6 to 9 percent slopes, PA2	0.152	0.000	0.142	0.000	0.000	0.169	0.000	0.000	0.152

Appendix K – Soils by Milepost – Gulf Coast Section

Pipeline Segment		County	Beginning Milepost	Ending Milepost	Miles	Soil Series	Soil Series Name	Wind (miles)	water (miles)	Low revegetation potential (miles)	Prime Farmland (miles)	Hydric (miles)	Compaction Prone (miles)	Stony-Rocky (miles)	Shallow Bedrock (miles)	Droughty (miles)
Coast		ches														
Gulf Coast	TX	Nacogdoches	316.140	316.198	0.057	TX347	Millboro-Boro silty clays, 6 to 9 percent slopes, PA2	0.000	0.000	0.048	0.057	0.000	0.057	0.000	0.000	0.000
Gulf Coast	TX	Nacogdoches	316.198	316.449	0.252	TX347	Millboro-Boro silty clays, 6 to 9 percent slopes, PA2	0.000	0.163	0.211	0.000	0.000	0.252	0.163	0.000	0.000
Gulf Coast	TX	Nacogdoches	316.449	316.512	0.063	TX347	Millboro-Boro silty clays, 6 to 9 percent slopes, PA2	0.000	0.051	0.053	0.000	0.000	0.063	0.000	0.051	0.000
Gulf Coast	TX	Nacogdoches	316.512	316.558	0.046	TX347	Millboro-Boro silty clays, 6 to 9 percent slopes, PA2	0.041	0.000	0.038	0.000	0.000	0.046	0.000	0.000	0.041
Gulf Coast	TX	Nacogdoches	316.558	316.652	0.094	TX347	Millboro-Boro silty clays, 6 to 9 percent slopes, PA2	0.085	0.085	0.079	0.000	0.000	0.094	0.000	0.085	0.085
Gulf Coast	TX	Nacogdoches	316.652	316.764	0.112	TX347	Millboro-Boro silty clays, 6 to 9 percent slopes, PA2	0.090	0.000	0.094	0.000	0.000	0.112	0.000	0.000	0.090
Gulf Coast	TX	Nacogdoches	316.764	316.880	0.116	TX347	Millboro-Boro silty clays, 6 to 9 percent slopes, PA2	0.105	0.105	0.098	0.000	0.000	0.116	0.000	0.105	0.105
Gulf Coast	TX	Nacogdoches	316.880	316.959	0.079	TX347	Millboro-Boro silty clays, 6 to 9 percent slopes, PA2	0.063	0.000	0.066	0.000	0.000	0.079	0.000	0.000	0.063
Gulf Coast	TX	Nacogdoches	316.959	317.139	0.180	TX347	Millboro-Boro silty clays, 6 to 9 percent slopes, PA2	0.000	0.144	0.151	0.000	0.000	0.180	0.000	0.144	0.000
Gulf Coast	TX	Nacogdoches	317.139	317.188	0.049	TX347	Millboro-Boro silty clays, 6 to 9 percent slopes, PA2	0.044	0.044	0.041	0.000	0.000	0.049	0.000	0.044	0.044
Gulf Coast	TX	Nacogdoches	317.188	317.232	0.045	TX347	Millboro-Boro silty clays, 6 to 9 percent slopes, PA2	0.036	0.000	0.038	0.000	0.000	0.045	0.000	0.000	0.036
Gulf Coast	TX	Nacogdoches	317.232	317.810	0.577	TX347	Millboro-Boro silty clays, 6 to 9 percent slopes, PA2	0.520	0.520	0.485	0.000	0.000	0.577	0.000	0.520	0.520
Gulf Coast	TX	Nacogdoches	317.810	317.888	0.079	TX347	Millboro-Boro silty clays, 6 to 9 percent slopes, PA2	0.063	0.000	0.066	0.000	0.000	0.079	0.000	0.000	0.063
Gulf Coast	TX	Nacogdoches	317.888	318.034	0.146	TX347	Millboro-Boro silty clays, 6 to 9 percent slopes, PA2	0.132	0.132	0.123	0.000	0.000	0.146	0.000	0.132	0.132
Gulf Coast	TX	Nacogdoches	318.034	318.241	0.207	TX347	Millboro-Boro silty clays, 6 to 9 percent slopes, PA2	0.165	0.000	0.173	0.000	0.000	0.207	0.000	0.000	0.165
Gulf Coast	TX	Nacogdoches	318.241	318.266	0.025	TX347	Millboro-Boro silty clays, 6 to 9 percent slopes, PA2	0.000	0.000	0.021	0.025	0.000	0.025	0.000	0.000	0.000
Gulf Coast	TX	Nacogdoches	318.266	318.387	0.121	TX347	Millboro-Boro silty clays, 6 to 9 percent slopes, PA2	0.097	0.000	0.102	0.000	0.000	0.121	0.000	0.000	0.097
Gulf Coast	TX	Nacogdoches	318.387	318.447	0.060	TX347	Millboro-Boro silty clays, 6 to 9 percent slopes, PA2	0.000	0.048	0.051	0.000	0.000	0.060	0.000	0.048	0.000
Gulf Coast	TX	Nacogdoches	318.447	318.494	0.047	TX347	Millboro-Boro silty clays, 6 to 9 percent slopes, PA2	0.000	0.000	0.039	0.047	0.000	0.047	0.000	0.000	0.000
Gulf Coast	TX	Nacogdoches	318.494	318.536	0.043	TX347	Millboro-Boro silty clays, 6 to 9 percent slopes, PA2	0.000	0.034	0.036	0.000	0.000	0.043	0.000	0.034	0.000
Gulf Coast	TX	Nacogdoches	318.536	318.603	0.066	TX347	Millboro-Boro silty clays, 6 to 9 percent slopes, PA2	0.060	0.060	0.056	0.000	0.000	0.066	0.000	0.060	0.060
Gulf	TX	Nacogdo	318.603	318.764	0.161	TX347	Millboro-Boro silty clays, 6 to 9 percent slopes, PA2	0.145	0.000	0.135	0.000	0.000	0.161	0.000	0.000	0.145

Appendix K – Soils by Milepost – Gulf Coast Section

Pipeline Segment		County	Beginning Milepost	Ending Milepost	Miles	Soil Series	Soil Series Name	Wind (miles)	water (miles)	Low revegetation potential (miles)	Prime Farmland (miles)	Hydric (miles)	Compaction Prone (miles)	Stony-Rocky (miles)	Shallow Bedrock (miles)	Droughty (miles)
Coast		ches														
Gulf Coast	TX	Nacogdoches	318.764	318.886	0.122	TX347	Millboro-Boro silty clays, 6 to 9 percent slopes, PA2	0.110	0.110	0.102	0.000	0.000	0.122	0.000	0.110	0.110
Gulf Coast	TX	Nacogdoches	318.886	318.934	0.048	TX347	Millboro-Boro silty clays, 6 to 9 percent slopes, PA2	0.041	0.000	0.040	0.000	0.000	0.048	0.000	0.000	0.041
Gulf Coast	TX	Nacogdoches	318.934	319.014	0.080	TX347	Millboro-Boro silty clays, 6 to 9 percent slopes, PA2	0.000	0.000	0.067	0.080	0.000	0.080	0.000	0.000	0.000
Gulf Coast	TX	Nacogdoches	319.014	319.124	0.110	TX347	Millboro-Boro silty clays, 6 to 9 percent slopes, PA2	0.099	0.099	0.093	0.000	0.000	0.110	0.000	0.099	0.099
Gulf Coast	TX	Nacogdoches	319.124	319.266	0.142	TX347	Millboro-Boro silty clays, 6 to 9 percent slopes, PA2	0.121	0.000	0.119	0.000	0.000	0.142	0.000	0.000	0.121
Gulf Coast	TX	Nacogdoches	319.266	319.434	0.168	TX347	Millboro-Boro silty clays, 6 to 9 percent slopes, PA2	0.152	0.152	0.141	0.000	0.000	0.168	0.000	0.152	0.152
Gulf Coast	TX	Nacogdoches	319.434	319.563	0.129	TX347	Millboro-Boro silty clays, 6 to 9 percent slopes, PA2	0.000	0.103	0.108	0.000	0.000	0.129	0.000	0.103	0.000
Gulf Coast	TX	Nacogdoches	319.563	319.655	0.092	TX347	Millboro-Boro silty clays, 6 to 9 percent slopes, PA2	0.000	0.000	0.077	0.092	0.000	0.092	0.000	0.000	0.000
Gulf Coast	TX	Nacogdoches	319.655	319.766	0.111	TX347	Millboro-Boro silty clays, 6 to 9 percent slopes, PA2	0.000	0.089	0.093	0.000	0.000	0.111	0.000	0.089	0.000
Gulf Coast	TX	Nacogdoches	319.766	319.847	0.081	TX347	Millboro-Boro silty clays, 6 to 9 percent slopes, PA2	0.073	0.000	0.068	0.000	0.000	0.081	0.000	0.000	0.073
Gulf Coast	TX	Nacogdoches	319.847	319.919	0.072	TX347	Millboro-Boro silty clays, 6 to 9 percent slopes, PA2	0.000	0.000	0.060	0.072	0.000	0.072	0.000	0.000	0.000
Gulf Coast	TX	Nacogdoches	319.919	320.044	0.125	TX347	Millboro-Boro silty clays, 6 to 9 percent slopes, PA2	0.000	0.100	0.105	0.000	0.000	0.125	0.000	0.100	0.000
Gulf Coast	TX	Nacogdoches	320.044	320.124	0.080	TX347	Millboro-Boro silty clays, 6 to 9 percent slopes, PA2	0.000	0.052	0.067	0.000	0.000	0.080	0.000	0.000	0.000
Gulf Coast	TX	Nacogdoches	320.124	320.654	0.530	TX347	Millboro-Boro silty clays, 6 to 9 percent slopes, PA2	0.000	0.000	0.445	0.530	0.000	0.530	0.000	0.000	0.000
Gulf Coast	TX	Nacogdoches	320.654	320.672	0.018	TX347	Millboro-Boro silty clays, 6 to 9 percent slopes, PA2	0.000	0.000	0.015	0.000	0.000	0.018	0.000	0.000	0.000
Gulf Coast	TX	Nacogdoches	320.672	320.737	0.065	TX347	Millboro-Boro silty clays, 6 to 9 percent slopes, PA2	0.000	0.000	0.055	0.065	0.000	0.065	0.000	0.000	0.000
Gulf Coast	TX	Nacogdoches	320.737	320.902	0.165	TX347	Millboro-Boro silty clays, 6 to 9 percent slopes, PA2	0.000	0.000	0.139	0.000	0.000	0.165	0.000	0.000	0.000
Gulf Coast	TX	Nacogdoches	320.902	320.953	0.051	TX347	Millboro-Boro silty clays, 6 to 9 percent slopes, PA2	0.000	0.041	0.043	0.000	0.000	0.051	0.000	0.041	0.000
Gulf Coast	TX	Nacogdoches	320.953	321.033	0.080	TX347	Millboro-Boro silty clays, 6 to 9 percent slopes, PA2	0.000	0.000	0.067	0.000	0.000	0.080	0.000	0.060	0.000
Gulf Coast	TX	Nacogdoches	321.033	321.114	0.081	TX347	Millboro-Boro silty clays, 6 to 9 percent slopes, PA2	0.000	0.053	0.068	0.000	0.000	0.081	0.000	0.000	0.000
Gulf Coast	TX	Nacogdoches	321.114	321.143	0.028	TX347	Millboro-Boro silty clays, 6 to 9 percent slopes, PA2	0.000	0.000	0.024	0.028	0.000	0.028	0.000	0.000	0.000
Gulf	TX	Nacogdo	321.143	321.434	0.292	TX347	Millboro-Boro silty clays, 6 to 9 percent slopes, PA2	0.000	0.190	0.245	0.000	0.000	0.292	0.000	0.000	0.000

Appendix K – Soils by Milepost – Gulf Coast Section

Pipeline Segment		County	Beginning Milepost	Ending Milepost	Miles	Soil Series	Soil Series Name	Wind (miles)	water (miles)	Low revegetation potential (miles)	Prime Farmland (miles)	Hydric (miles)	Compaction Prone (miles)	Stony-Rocky (miles)	Shallow Bedrock (miles)	Droughty (miles)
Coast		ches														
Gulf Coast	TX	Nacogdoches	321.434	321.714	0.279	TX347	Millboro-Boro silty clays, 6 to 9 percent slopes, PA2	0.000	0.000	0.235	0.279	0.000	0.279	0.000	0.000	0.000
Gulf Coast	TX	Nacogdoches	321.714	322.037	0.323	TX347	Millboro-Boro silty clays, 6 to 9 percent slopes, PA2	0.000	0.000	0.272	0.323	0.000	0.323	0.000	0.291	0.000
Gulf Coast	TX	Nacogdoches	322.037	322.312	0.275	TX347	Millboro-Boro silty clays, 6 to 9 percent slopes, PA2	0.000	0.000	0.231	0.275	0.000	0.275	0.000	0.000	0.000
Gulf Coast	TX	Nacogdoches	322.312	322.427	0.115	TX347	Millboro-Boro silty clays, 6 to 9 percent slopes, PA2	0.000	0.000	0.096	0.000	0.000	0.115	0.000	0.086	0.000
Gulf Coast	TX	Nacogdoches	322.427	322.446	0.019	TX347	Millboro-Boro silty clays, 6 to 9 percent slopes, PA2	0.000	0.012	0.016	0.000	0.000	0.019	0.000	0.000	0.000
Gulf Coast	TX	Nacogdoches	322.446	322.799	0.353	TX347	Millboro-Boro silty clays, 6 to 9 percent slopes, PA2	0.000	0.000	0.296	0.353	0.000	0.353	0.000	0.000	0.000
Gulf Coast	TX	Nacogdoches	322.799	322.948	0.149	TX347	Millboro-Boro silty clays, 6 to 9 percent slopes, PA2	0.000	0.097	0.125	0.000	0.000	0.149	0.000	0.000	0.000
Gulf Coast	TX	Nacogdoches	322.948	323.178	0.230	TX347	Millboro-Boro silty clays, 6 to 9 percent slopes, PA2	0.000	0.000	0.193	0.230	0.000	0.230	0.000	0.000	0.000
Gulf Coast	TX	Nacogdoches	323.178	323.336	0.158	TX347	Millboro-Boro silty clays, 6 to 9 percent slopes, PA2	0.000	0.103	0.133	0.000	0.000	0.158	0.000	0.000	0.000
Gulf Coast	TX	Nacogdoches	323.336	323.801	0.466	TX347	Millboro-Boro silty clays, 6 to 9 percent slopes, PA2	0.000	0.000	0.391	0.466	0.000	0.466	0.000	0.000	0.000
Gulf Coast	TX	Nacogdoches	323.801	323.966	0.164	TX347	Millboro-Boro silty clays, 6 to 9 percent slopes, PA2	0.000	0.107	0.138	0.000	0.000	0.164	0.000	0.000	0.000
Gulf Coast	TX	Nacogdoches	323.966	323.969	0.003	TX347	Millboro-Boro silty clays, 6 to 9 percent slopes, PA2	0.000	0.000	0.003	0.000	0.000	0.003	0.000	0.000	0.000
Gulf Coast	TX	Nacogdoches	323.969	324.048	0.079	TX347	Millboro-Boro silty clays, 6 to 9 percent slopes, PA2	0.000	0.051	0.066	0.000	0.000	0.079	0.000	0.000	0.000
Gulf Coast	TX	Nacogdoches	324.048	324.282	0.234	TX347	Millboro-Boro silty clays, 6 to 9 percent slopes, PA2	0.000	0.000	0.197	0.000	0.000	0.234	0.000	0.000	0.000
Gulf Coast	TX	Nacogdoches	324.282	324.328	0.046	TX347	Millboro-Boro silty clays, 6 to 9 percent slopes, PA2	0.000	0.030	0.039	0.000	0.000	0.046	0.000	0.000	0.000
Gulf Coast	TX	Nacogdoches	324.328	324.574	0.246	TX347	Millboro-Boro silty clays, 6 to 9 percent slopes, PA2	0.000	0.000	0.207	0.000	0.000	0.246	0.000	0.000	0.000
Gulf Coast	TX	Nacogdoches	324.574	324.725	0.151	TX347	Millboro-Boro silty clays, 6 to 9 percent slopes, PA2	0.000	0.098	0.126	0.000	0.000	0.151	0.000	0.000	0.000
Gulf Coast	TX	Nacogdoches	324.725	324.843	0.118	TX347	Millboro-Boro silty clays, 6 to 9 percent slopes, PA2	0.000	0.000	0.099	0.118	0.000	0.118	0.000	0.000	0.000
Gulf Coast	TX	Nacogdoches	324.843	324.953	0.110	TX347	Millboro-Boro silty clays, 6 to 9 percent slopes, PA2	0.000	0.071	0.092	0.000	0.000	0.110	0.000	0.000	0.000
Gulf Coast	TX	Nacogdoches	324.953	325.000	0.047	TX347	Millboro-Boro silty clays, 6 to 9 percent slopes, PA2	0.000	0.000	0.040	0.000	0.000	0.047	0.000	0.000	0.000
Gulf Coast	TX	Nacogdoches	325.000	325.133	0.133	TX347	Millboro-Boro silty clays, 6 to 9 percent slopes, PA2	0.000	0.087	0.112	0.000	0.000	0.133	0.000	0.000	0.000
Gulf	TX	Nacogdo	325.133	325.473	0.340	TX347	Millboro-Boro silty clays, 6 to 9 percent slopes, PA2	0.000	0.000	0.286	0.340	0.000	0.272	0.000	0.000	0.000

Appendix K – Soils by Milepost – Gulf Coast Section

Pipeline Segment		County	Beginning Milepost	Ending Milepost	Miles	Soil Series	Soil Series Name	Wind (miles)	water (miles)	Low revegetation potential (miles)	Prime Farmland (miles)	Hydric (miles)	Compaction Prone (miles)	Stony-Rocky (miles)	Shallow Bedrock (miles)	Droughty (miles)
Coast		ches														
Gulf Coast	TX	Nacogdoches	325.473	325.593	0.120	TX347	Millboro-Boro silty clays, 6 to 9 percent slopes, PA2	0.000	0.000	0.101	0.120	0.114	0.114	0.000	0.000	0.000
Gulf Coast	TX	Nacogdoches	325.593	325.833	0.240	TX347	Millboro-Boro silty clays, 6 to 9 percent slopes, PA2	0.000	0.000	0.202	0.240	0.000	0.192	0.000	0.000	0.000
Gulf Coast	TX	Nacogdoches	325.833	326.094	0.262	TX347	Millboro-Boro silty clays, 6 to 9 percent slopes, PA2	0.000	0.000	0.220	0.262	0.249	0.249	0.000	0.000	0.000
Gulf Coast	TX	Nacogdoches	326.094	326.644	0.550	TX347	Millboro-Boro silty clays, 6 to 9 percent slopes, PA2	0.000	0.000	0.462	0.550	0.000	0.440	0.000	0.000	0.000
Gulf Coast	TX	Nacogdoches	326.644	326.721	0.077	TX347	Millboro-Boro silty clays, 6 to 9 percent slopes, PA2	0.000	0.000	0.064	0.077	0.000	0.000	0.000	0.000	0.000
Gulf Coast	TX	Nacogdoches	326.721	326.757	0.036	TX347	Millboro-Boro silty clays, 6 to 9 percent slopes, PA2	0.000	0.000	0.030	0.036	0.000	0.029	0.000	0.000	0.000
Gulf Coast	TX	Nacogdoches	326.757	327.316	0.560	TX347	Millboro-Boro silty clays, 6 to 9 percent slopes, PA2	0.000	0.000	0.470	0.560	0.000	0.504	0.000	0.504	0.000
Gulf Coast	TX	Nacogdoches	327.316	327.703	0.387	TX347	Millboro-Boro silty clays, 6 to 9 percent slopes, PA2	0.000	0.000	0.325	0.387	0.000	0.348	0.000	0.348	0.000
Gulf Coast	TX	Nacogdoches	327.703	327.860	0.157	TX347	Millboro-Boro silty clays, 6 to 9 percent slopes, PA2	0.000	0.000	0.132	0.000	0.000	0.133	0.133	0.000	0.000
Gulf Coast	TX	Nacogdoches	327.860	327.944	0.083	TX347	Millboro-Boro silty clays, 6 to 9 percent slopes, PA2	0.000	0.000	0.070	0.000	0.000	0.071	0.000	0.000	0.000
Gulf Coast	TX	Nacogdoches	327.944	327.990	0.046	TX347	Millboro-Boro silty clays, 6 to 9 percent slopes, PA2	0.000	0.000	0.039	0.046	0.000	0.037	0.000	0.000	0.000
Gulf Coast	TX	Nacogdoches	327.990	328.008	0.018	TX347	Millboro-Boro silty clays, 6 to 9 percent slopes, PA2	0.000	0.000	0.015	0.018	0.000	0.016	0.000	0.016	0.000
Gulf Coast	TX	Nacogdoches	328.008	328.036	0.028	TX347	Millboro-Boro silty clays, 6 to 9 percent slopes, PA2	0.000	0.000	0.024	0.028	0.000	0.000	0.000	0.000	0.000
Gulf Coast	TX	Nacogdoches	328.036	328.360	0.324	TX347	Millboro-Boro silty clays, 6 to 9 percent slopes, PA2	0.000	0.000	0.272	0.324	0.000	0.275	0.000	0.000	0.000
Gulf Coast	TX	Nacogdoches	328.360	328.484	0.124	TX347	Millboro-Boro silty clays, 6 to 9 percent slopes, PA2	0.000	0.000	0.104	0.124	0.000	0.112	0.000	0.112	0.000
Gulf Coast	TX	Nacogdoches	328.484	328.570	0.085	TX347	Millboro-Boro silty clays, 6 to 9 percent slopes, PA2	0.000	0.000	0.072	0.085	0.000	0.073	0.000	0.000	0.000
Gulf Coast	TX	Nacogdoches	328.570	328.688	0.119	TX347	Millboro-Boro silty clays, 6 to 9 percent slopes, PA2	0.000	0.077	0.100	0.000	0.000	0.077	0.000	0.000	0.000
Gulf Coast	TX	Nacogdoches	328.688	328.996	0.308	TX347	Millboro-Boro silty clays, 6 to 9 percent slopes, PA2	0.000	0.000	0.259	0.308	0.000	0.262	0.000	0.000	0.000
Gulf Coast	TX	Nacogdoches	328.996	329.087	0.090	TX347	Millboro-Boro silty clays, 6 to 9 percent slopes, PA2	0.000	0.059	0.076	0.000	0.000	0.059	0.000	0.000	0.000
Gulf Coast	TX	Nacogdoches	329.087	329.127	0.041	TX347	Millboro-Boro silty clays, 6 to 9 percent slopes, PA2	0.000	0.000	0.034	0.041	0.000	0.035	0.000	0.000	0.000
Gulf Coast	TX	Nacogdoches	329.127	329.184	0.057	TX347	Millboro-Boro silty clays, 6 to 9 percent slopes, PA2	0.000	0.037	0.048	0.000	0.000	0.037	0.000	0.000	0.000
Gulf	TX	Nacogdo	329.184	329.253	0.069	TX347	Millboro-Boro silty clays, 6 to 9 percent slopes, PA2	0.000	0.000	0.058	0.069	0.000	0.062	0.000	0.062	0.000

Appendix K – Soils by Milepost – Gulf Coast Section

Pipeline Segment		County	Beginning Milepost	Ending Milepost	Miles	Soil Series	Soil Series Name	Wind (miles)	water (miles)	Low revegetation potential (miles)	Prime Farmland (miles)	Hydric (miles)	Compaction Prone (miles)	Stony-Rocky (miles)	Shallow Bedrock (miles)	Droughty (miles)
Coast		ches														
Gulf Coast	TX	Nacogdoches	329.253	329.410	0.157	TX347	Millboro-Boro silty clays, 6 to 9 percent slopes, PA2	0.000	0.000	0.132	0.157	0.000	0.133	0.000	0.000	0.000
Gulf Coast	TX	Nacogdoches	329.410	329.471	0.061	TX347	Millboro-Boro silty clays, 6 to 9 percent slopes, PA2	0.000	0.040	0.052	0.000	0.000	0.040	0.000	0.000	0.000
Gulf Coast	TX	Nacogdoches	329.471	329.539	0.068	TX347	Millboro-Boro silty clays, 6 to 9 percent slopes, PA2	0.000	0.000	0.057	0.068	0.000	0.061	0.000	0.061	0.000
Gulf Coast	TX	Nacogdoches	329.539	329.575	0.036	TX347	Millboro-Boro silty clays, 6 to 9 percent slopes, PA2	0.000	0.023	0.030	0.000	0.000	0.023	0.000	0.000	0.000
Gulf Coast	TX	Nacogdoches	329.575	329.790	0.216	TX347	Millboro-Boro silty clays, 6 to 9 percent slopes, PA2	0.000	0.000	0.181	0.216	0.000	0.194	0.000	0.194	0.000
Gulf Coast	TX	Nacogdoches	329.790	329.858	0.067	TX347	Millboro-Boro silty clays, 6 to 9 percent slopes, PA2	0.000	0.000	0.057	0.000	0.000	0.057	0.057	0.000	0.000
Gulf Coast	TX	Nacogdoches	329.858	330.172	0.314	TX347	Millboro-Boro silty clays, 6 to 9 percent slopes, PA2	0.000	0.000	0.264	0.314	0.000	0.283	0.000	0.283	0.000
Gulf Coast	TX	Nacogdoches	330.172	330.224	0.052	TX347	Millboro-Boro silty clays, 6 to 9 percent slopes, PA2	0.047	0.000	0.044	0.000	0.000	0.047	0.000	0.000	0.047
Gulf Coast	TX	Nacogdoches	330.224	330.549	0.326	TX347	Millboro-Boro silty clays, 6 to 9 percent slopes, PA2	0.000	0.212	0.274	0.000	0.000	0.212	0.000	0.000	0.000
Gulf Coast	TX	Nacogdoches	330.549	331.012	0.463	TX347	Millboro-Boro silty clays, 6 to 9 percent slopes, PA2	0.000	0.000	0.389	0.463	0.000	0.393	0.000	0.000	0.000
Gulf Coast	TX	Nacogdoches	331.012	331.094	0.082	TX347	Millboro-Boro silty clays, 6 to 9 percent slopes, PA2	0.000	0.000	0.069	0.082	0.000	0.066	0.000	0.000	0.000
Gulf Coast	TX	Nacogdoches	331.094	331.181	0.086	TX347	Millboro-Boro silty clays, 6 to 9 percent slopes, PA2	0.000	0.073	0.073	0.000	0.000	0.073	0.000	0.000	0.000
Gulf Coast	TX	Nacogdoches	331.181	331.348	0.168	TX347	Millboro-Boro silty clays, 6 to 9 percent slopes, PA2	0.000	0.000	0.141	0.168	0.000	0.134	0.000	0.000	0.000
Gulf Coast	TX	Nacogdoches	331.348	331.718	0.370	TX347	Millboro-Boro silty clays, 6 to 9 percent slopes, PA2	0.000	0.000	0.311	0.370	0.000	0.296	0.000	0.000	0.000
Gulf Coast	TX	Nacogdoches	331.718	331.881	0.163	TX347	Millboro-Boro silty clays, 6 to 9 percent slopes, PA2	0.000	0.131	0.137	0.000	0.000	0.131	0.000	0.131	0.000
Gulf Coast	TX	Nacogdoches	331.881	331.985	0.104	TX347	Millboro-Boro silty clays, 6 to 9 percent slopes, PA2	0.000	0.000	0.087	0.104	0.000	0.083	0.000	0.000	0.000
Gulf Coast	TX	Nacogdoches	331.985	332.233	0.248	TX347	Millboro-Boro silty clays, 6 to 9 percent slopes, PA2	0.000	0.161	0.208	0.000	0.000	0.161	0.000	0.000	0.000
Gulf Coast	TX	Nacogdoches	332.233	332.283	0.051	TX347	Millboro-Boro silty clays, 6 to 9 percent slopes, PA2	0.000	0.000	0.042	0.000	0.043	0.043	0.000	0.000	0.000
Gulf Coast	TX	Nacogdoches	332.283	332.300	0.017	TX347	Millboro-Boro silty clays, 6 to 9 percent slopes, PA2	0.000	0.000	0.014	0.000	0.000	0.000	0.000	0.000	0.000
Gulf Coast	TX	Cherokee	332.300	332.313	0.013	TX073	Millboro-Boro silty clays, 6 to 9 percent slopes, PA2	0.000	0.000	0.011	0.000	0.000	0.000	0.000	0.000	0.000
Gulf Coast	TX	Cherokee	332.313	332.628	0.315	TX073	Millboro-Boro silty clays, 6 to 9 percent slopes, PA2	0.315	0.000	0.265	0.000	0.000	0.000	0.000	0.000	0.315
Gulf	TX	Cheroke	332.628	333.175	0.546	TX073	Millboro-Boro silty clays, 6 to 9 percent slopes, PA2	0.000	0.000	0.459	0.000	0.000	0.000	0.000	0.000	0.000

Appendix K – Soils by Milepost – Gulf Coast Section

Pipeline Segment		County	Beginning Milepost	Ending Milepost	Miles	Soil Series	Soil Series Name	Wind (miles)	water (miles)	Low revegetation potential (miles)	Prime Farmland (miles)	Hydric (miles)	Compaction Prone (miles)	Stony-Rocky (miles)	Shallow Bedrock (miles)	Droughty (miles)
Coast		e														
Gulf Coast	TX	Cherokee	333.175	333.251	0.076	TX073	Millboro-Boro silty clays, 6 to 9 percent slopes, PA2	0.000	0.000	0.064	0.000	0.072	0.072	0.000	0.000	0.000
Gulf Coast	TX	Cherokee	333.251	333.410	0.159	TX073	Millboro-Boro silty clays, 6 to 9 percent slopes, PA2	0.000	0.000	0.133	0.000	0.000	0.000	0.000	0.000	0.000
Gulf Coast	TX	Cherokee	333.410	333.433	0.023	TX073	Millboro-Boro silty clays, 6 to 9 percent slopes, PA2	0.000	0.000	0.019	0.000	0.022	0.022	0.000	0.000	0.000
Gulf Coast	TX	Cherokee	333.433	333.452	0.020	TX073	Millboro-Boro silty clays, 6 to 9 percent slopes, PA2	0.000	0.000	0.017	0.000	0.000	0.000	0.000	0.000	0.000
Gulf Coast	TX	Cherokee	333.452	333.524	0.072	TX073	Millboro-Boro silty clays, 6 to 9 percent slopes, PA2	0.000	0.000	0.060	0.000	0.068	0.068	0.000	0.000	0.000
Gulf Coast	TX	Cherokee	333.524	333.771	0.247	TX073	Millboro-Boro silty clays, 6 to 9 percent slopes, PA2	0.000	0.000	0.208	0.000	0.000	0.000	0.000	0.000	0.000
Gulf Coast	TX	Cherokee	333.771	334.368	0.597	TX073	Millboro-Boro silty clays, 6 to 9 percent slopes, PA2	0.000	0.000	0.501	0.000	0.000	0.507	0.000	0.000	0.000
Gulf Coast	TX	Cherokee	334.368	335.219	0.851	TX073	Millboro-Boro silty clays, 6 to 9 percent slopes, PA2	0.000	0.000	0.715	0.000	0.808	0.808	0.000	0.000	0.000
Gulf Coast	TX	Cherokee	335.219	335.256	0.036	TX073	Millboro-Boro silty clays, 6 to 9 percent slopes, PA2	0.036	0.000	0.031	0.000	0.000	0.000	0.000	0.000	0.036
Gulf Coast	TX	Cherokee	335.256	335.356	0.100	TX073	Millboro-Boro silty clays, 6 to 9 percent slopes, PA2	0.000	0.100	0.084	0.000	0.000	0.100	0.000	0.000	0.100
Gulf Coast	TX	Cherokee	335.356	335.438	0.083	TX073	Millboro-Boro silty clays, 6 to 9 percent slopes, PA2	0.000	0.000	0.069	0.000	0.000	0.083	0.000	0.000	0.000
Gulf Coast	TX	Cherokee	335.438	335.651	0.213	TX073	Millboro-Boro silty clays, 6 to 9 percent slopes, PA2	0.000	0.000	0.179	0.213	0.000	0.213	0.000	0.000	0.213
Gulf Coast	TX	Cherokee	335.651	335.836	0.185	TX073	Millboro-Boro silty clays, 6 to 9 percent slopes, PA2	0.000	0.157	0.155	0.000	0.000	0.157	0.000	0.157	0.000
Gulf Coast	TX	Cherokee	335.836	335.885	0.049	TX073	Millboro-Boro silty clays, 6 to 9 percent slopes, PA2	0.000	0.000	0.041	0.049	0.000	0.049	0.000	0.000	0.049
Gulf Coast	TX	Cherokee	335.885	336.143	0.258	TX073	Millboro-Boro silty clays, 6 to 9 percent slopes, PA2	0.000	0.000	0.217	0.000	0.000	0.258	0.000	0.000	0.000
Gulf Coast	TX	Cherokee	336.143	336.272	0.129	TX073	Millboro-Boro silty clays, 6 to 9 percent slopes, PA2	0.000	0.000	0.108	0.000	0.000	0.129	0.000	0.000	0.000
Gulf Coast	TX	Cherokee	336.272	336.441	0.169	TX073	Millboro-Boro silty clays, 6 to 9 percent slopes, PA2	0.000	0.169	0.142	0.000	0.000	0.169	0.000	0.000	0.000
Gulf Coast	TX	Cherokee	336.441	336.612	0.171	TX073	Millboro-Boro silty clays, 6 to 9 percent slopes, PA2	0.000	0.000	0.143	0.000	0.000	0.000	0.000	0.000	0.000
Gulf Coast	TX	Cherokee	336.612	336.675	0.063	TX073	Millboro-Boro silty clays, 6 to 9 percent slopes, PA2	0.000	0.063	0.053	0.000	0.000	0.063	0.000	0.000	0.000
Gulf Coast	TX	Cherokee	336.675	336.949	0.274	TX073	Millboro-Boro silty clays, 6 to 9 percent slopes, PA2	0.000	0.000	0.230	0.274	0.000	0.274	0.000	0.000	0.000
Gulf Coast	TX	Cherokee	336.949	337.014	0.066	TX073	Millboro-Boro silty clays, 6 to 9 percent slopes, PA2	0.000	0.000	0.055	0.000	0.062	0.062	0.000	0.000	0.000
Gulf	TX	Cheroke	337.014	337.274	0.260	TX073	Millboro-Boro silty clays, 6 to 9 percent slopes, PA2	0.000	0.000	0.218	0.260	0.000	0.260	0.000	0.000	0.000

Appendix K – Soils by Milepost – Gulf Coast Section

Pipeline Segment		County	Beginning Milepost	Ending Milepost	Miles	Soil Series	Soil Series Name	Wind (miles)	water (miles)	Low revegetation potential (miles)	Prime Farmland (miles)	Hydric (miles)	Compaction Prone (miles)	Stony-Rocky (miles)	Shallow Bedrock (miles)	Droughty (miles)
Coast		e														
Gulf Coast	TX	Cherokee	337.274	337.406	0.131	TX073	Millboro-Boro silty clays, 6 to 9 percent slopes, PA2	0.000	0.000	0.110	0.000	0.000	0.131	0.000	0.131	0.000
Gulf Coast	TX	Cherokee	337.406	337.426	0.021	TX073	Millboro-Boro silty clays, 6 to 9 percent slopes, PA2	0.000	0.021	0.017	0.000	0.000	0.021	0.000	0.000	0.021
Gulf Coast	TX	Cherokee	337.426	337.427	0.001	TX073	Millboro-Boro silty clays, 6 to 9 percent slopes, PA2	0.000	0.000	0.001	0.001	0.000	0.001	0.000	0.000	0.000
Gulf Coast	TX	Cherokee	337.427	337.613	0.186	TX073	Millboro-Boro silty clays, 6 to 9 percent slopes, PA2	0.000	0.000	0.156	0.186	0.000	0.186	0.000	0.000	0.000
Gulf Coast	TX	Cherokee	337.613	337.620	0.007	TX073	Millboro-Boro silty clays, 6 to 9 percent slopes, PA2	0.000	0.000	0.006	0.007	0.000	0.007	0.000	0.000	0.000
Gulf Coast	TX	Cherokee	337.620	337.751	0.131	TX073	Millboro-Boro silty clays, 6 to 9 percent slopes, PA2	0.000	0.000	0.110	0.131	0.000	0.131	0.000	0.000	0.000
Gulf Coast	TX	Cherokee	337.751	337.884	0.132	TX073	Millboro-Boro silty clays, 6 to 9 percent slopes, PA2	0.000	0.000	0.111	0.132	0.000	0.132	0.000	0.000	0.000
Gulf Coast	TX	Cherokee	337.884	337.897	0.013	TX073	Millboro-Boro silty clays, 6 to 9 percent slopes, PA2	0.000	0.013	0.011	0.000	0.000	0.013	0.000	0.000	0.013
Gulf Coast	TX	Cherokee	337.897	337.948	0.052	TX073	Millboro-Boro silty clays, 6 to 9 percent slopes, PA2	0.000	0.000	0.043	0.052	0.000	0.052	0.000	0.000	0.000
Gulf Coast	TX	Cherokee	337.948	337.968	0.020	TX073	Millboro-Boro silty clays, 6 to 9 percent slopes, PA2	0.000	0.000	0.017	0.000	0.000	0.020	0.000	0.020	0.000
Gulf Coast	TX	Cherokee	337.968	338.319	0.350	TX073	Millboro-Boro silty clays, 6 to 9 percent slopes, PA2	0.000	0.000	0.294	0.000	0.000	0.350	0.000	0.350	0.000
Gulf Coast	TX	Cherokee	338.319	338.397	0.078	TX073	Millboro-Boro silty clays, 6 to 9 percent slopes, PA2	0.000	0.000	0.066	0.000	0.000	0.078	0.000	0.078	0.000
Gulf Coast	TX	Cherokee	338.397	338.555	0.158	TX073	Millboro-Boro silty clays, 6 to 9 percent slopes, PA2	0.000	0.000	0.132	0.000	0.000	0.158	0.000	0.000	0.158
Gulf Coast	TX	Cherokee	338.555	338.617	0.062	TX073	Millboro-Boro silty clays, 6 to 9 percent slopes, PA2	0.000	0.000	0.052	0.000	0.000	0.062	0.000	0.062	0.000
Gulf Coast	TX	Cherokee	338.617	338.682	0.065	TX073	Millboro-Boro silty clays, 6 to 9 percent slopes, PA2	0.000	0.000	0.054	0.000	0.000	0.065	0.000	0.065	0.000
Gulf Coast	TX	Cherokee	338.682	338.791	0.110	TX073	Millboro-Boro silty clays, 6 to 9 percent slopes, PA2	0.000	0.000	0.092	0.000	0.104	0.104	0.000	0.000	0.000
Gulf Coast	TX	Cherokee	338.791	338.837	0.045	TX073	Millboro-Boro silty clays, 6 to 9 percent slopes, PA2	0.000	0.000	0.038	0.000	0.000	0.045	0.000	0.000	0.000
Gulf Coast	TX	Cherokee	338.837	338.883	0.046	TX073	Millboro-Boro silty clays, 6 to 9 percent slopes, PA2	0.000	0.000	0.039	0.046	0.000	0.046	0.000	0.000	0.000
Gulf Coast	TX	Angelina	338.883	339.709	0.826	TX005	Woodtell very fine sandy loam, 1 to 5 percent slopes	0.000	0.083	0.694	0.000	0.000	0.826	0.000	0.826	0.000
Gulf Coast	TX	Angelina	339.709	340.012	0.303	TX005	Bernaldo fine sandy loam, 0 to 3 percent slopes	0.000	0.000	0.255	0.303	0.000	0.267	0.000	0.000	0.000
Gulf Coast	TX	Angelina	340.012	340.084	0.072	TX005	Keithville-Sawtown complex, gently undulating	0.000	0.000	0.060	0.072	0.000	0.065	0.000	0.000	0.000
Gulf	TX	Angelina	340.084	340.139	0.055	TX005	Iuka fine sandy loam, occasionally flooded	0.000	0.000	0.046	0.055	0.000	0.000	0.000	0.000	0.000

Appendix K – Soils by Milepost – Gulf Coast Section

Pipeline Segment		County	Beginning Milepost	Ending Milepost	Miles	Soil Series	Soil Series Name	Wind (miles)	water (miles)	Low revegetation potential (miles)	Prime Farmland (miles)	Hydric (miles)	Compaction Prone (miles)	Stony-Rocky (miles)	Shallow Bedrock (miles)	Droughty (miles)
Coast																
Gulf Coast	TX	Angelina	340.139	340.380	0.241	TX005	Keithville-Sawtown complex, gently undulating	0.000	0.000	0.202	0.241	0.000	0.217	0.000	0.000	0.000
Gulf Coast	TX	Angelina	340.380	340.546	0.167	TX005	Iuka fine sandy loam, occasionally flooded	0.000	0.000	0.140	0.167	0.000	0.000	0.000	0.000	0.000
Gulf Coast	TX	Angelina	340.546	340.794	0.248	TX005	Woodtell very fine sandy loam, 1 to 5 percent slopes	0.000	0.025	0.208	0.000	0.000	0.248	0.000	0.248	0.000
Gulf Coast	TX	Angelina	340.794	340.893	0.099	TX005	Millboro-Boro silty clays, 6 to 9 percent slopes, PA2	0.000	0.089	0.083	0.000	0.000	0.099	0.000	0.089	0.000
Gulf Coast	TX	Angelina	340.893	340.980	0.087	TX005	Woodtell very fine sandy loam, 1 to 5 percent slopes	0.000	0.009	0.073	0.000	0.000	0.087	0.000	0.087	0.000
Gulf Coast	TX	Angelina	340.980	341.076	0.095	TX005	Millboro-Boro silty clays, 6 to 9 percent slopes, PA2	0.000	0.086	0.080	0.000	0.000	0.095	0.000	0.086	0.000
Gulf Coast	TX	Angelina	341.076	341.197	0.121	TX005	Woodtell very fine sandy loam, 1 to 5 percent slopes	0.000	0.012	0.102	0.000	0.000	0.121	0.000	0.121	0.000
Gulf Coast	TX	Angelina	341.197	341.291	0.095	TX005	Millboro-Boro silty clays, 6 to 9 percent slopes, PA2	0.000	0.085	0.080	0.000	0.000	0.095	0.000	0.085	0.000
Gulf Coast	TX	Angelina	341.291	341.320	0.029	TX005	Kirvin fine sandy loam, 1 to 5 percent slopes	0.000	0.000	0.024	0.000	0.000	0.023	0.000	0.023	0.000
Gulf Coast	TX	Angelina	341.320	341.614	0.294	TX005	Cuthbert fine sandy loam, 5 to 15 percent slopes	0.000	0.235	0.247	0.000	0.000	0.235	0.000	0.235	0.000
Gulf Coast	TX	Angelina	341.614	342.164	0.550	TX005	Kirvin fine sandy loam, 1 to 5 percent slopes	0.000	0.000	0.462	0.000	0.000	0.440	0.000	0.440	0.000
Gulf Coast	TX	Angelina	342.164	342.329	0.165	TX005	Keithville-Sawtown complex, gently undulating	0.000	0.000	0.139	0.165	0.000	0.149	0.000	0.000	0.000
Gulf Coast	TX	Angelina	342.329	342.384	0.055	TX005	Kirvin fine sandy loam, 1 to 5 percent slopes	0.000	0.000	0.047	0.000	0.000	0.044	0.000	0.044	0.000
Gulf Coast	TX	Angelina	342.384	342.475	0.091	TX005	Keithville-Sawtown complex, gently undulating	0.000	0.000	0.076	0.091	0.000	0.082	0.000	0.000	0.000
Gulf Coast	TX	Angelina	342.475	342.540	0.066	TX005	Kirvin fine sandy loam, 1 to 5 percent slopes	0.000	0.000	0.055	0.000	0.000	0.052	0.000	0.052	0.000
Gulf Coast	TX	Angelina	342.540	342.812	0.272	TX005	Cuthbert fine sandy loam, 5 to 15 percent slopes	0.000	0.218	0.228	0.000	0.000	0.218	0.000	0.218	0.000
Gulf Coast	TX	Angelina	342.812	343.024	0.212	TX005	Iuka fine sandy loam, occasionally flooded	0.000	0.000	0.178	0.212	0.000	0.000	0.000	0.000	0.000
Gulf Coast	TX	Angelina	343.024	343.066	0.042	TX005	Cuthbert fine sandy loam, 5 to 15 percent slopes	0.000	0.034	0.035	0.000	0.000	0.034	0.000	0.034	0.000
Gulf Coast	TX	Angelina	343.066	343.261	0.195	TX005	Bernaldo fine sandy loam, 0 to 3 percent slopes	0.000	0.000	0.164	0.195	0.000	0.172	0.000	0.000	0.000
Gulf Coast	TX	Angelina	343.261	343.317	0.055	TX005	Cuthbert fine sandy loam, 5 to 15 percent slopes	0.000	0.044	0.047	0.000	0.000	0.044	0.000	0.044	0.000
Gulf Coast	TX	Angelina	343.317	343.436	0.119	TX005	Iuka fine sandy loam, occasionally flooded	0.000	0.000	0.100	0.119	0.000	0.000	0.000	0.000	0.000
Gulf	TX	Angelina	343.436	343.548	0.112	TX005	Cuthbert fine sandy loam, 5 to 15 percent slopes	0.000	0.090	0.094	0.000	0.000	0.090	0.000	0.090	0.000

Appendix K – Soils by Milepost – Gulf Coast Section

Pipeline Segment		County	Beginning Milepost	Ending Milepost	Miles	Soil Series	Soil Series Name	Wind (miles)	water (miles)	Low revegetation potential (miles)	Prime Farmland (miles)	Hydric (miles)	Compaction Prone (miles)	Stony-Rocky (miles)	Shallow Bedrock (miles)	Droughty (miles)
Coast																
Gulf Coast	TX	Angelina	343.548	343.717	0.169	TX005	Bernaldo fine sandy loam, 0 to 3 percent slopes	0.000	0.000	0.142	0.169	0.000	0.149	0.000	0.000	0.000
Gulf Coast	TX	Angelina	343.717	344.087	0.370	TX005	Keithville-Sawtown complex, gently undulating	0.000	0.000	0.311	0.370	0.000	0.333	0.000	0.000	0.000
Gulf Coast	TX	Angelina	344.087	344.184	0.097	TX005	Kirvin fine sandy loam, 1 to 5 percent slopes	0.000	0.000	0.081	0.000	0.000	0.078	0.000	0.078	0.000
Gulf Coast	TX	Angelina	344.184	344.320	0.136	TX005	Cuthbert fine sandy loam, 5 to 15 percent slopes	0.000	0.109	0.114	0.000	0.000	0.109	0.000	0.109	0.000
Gulf Coast	TX	Angelina	344.320	344.384	0.063	TX005	Kirvin fine sandy loam, 1 to 5 percent slopes	0.000	0.000	0.053	0.000	0.000	0.051	0.000	0.051	0.000
Gulf Coast	TX	Angelina	344.384	344.543	0.160	TX005	Cuthbert fine sandy loam, 5 to 15 percent slopes	0.000	0.128	0.134	0.000	0.000	0.128	0.000	0.128	0.000
Gulf Coast	TX	Angelina	344.543	344.660	0.117	TX005	Bernaldo fine sandy loam, 0 to 3 percent slopes	0.000	0.000	0.098	0.117	0.000	0.103	0.000	0.000	0.000
Gulf Coast	TX	Angelina	344.660	344.831	0.171	TX005	Keithville-Sawtown complex, gently undulating	0.000	0.000	0.143	0.171	0.000	0.154	0.000	0.000	0.000
Gulf Coast	TX	Angelina	344.831	344.943	0.112	TX005	Bernaldo fine sandy loam, 0 to 3 percent slopes	0.000	0.000	0.094	0.112	0.000	0.099	0.000	0.000	0.000
Gulf Coast	TX	Angelina	344.943	345.096	0.153	TX005	Cuthbert fine sandy loam, 5 to 15 percent slopes	0.000	0.122	0.128	0.000	0.000	0.122	0.000	0.122	0.000
Gulf Coast	TX	Angelina	345.096	345.230	0.134	TX005	Bernaldo fine sandy loam, 0 to 3 percent slopes	0.000	0.000	0.112	0.134	0.000	0.118	0.000	0.000	0.000
Gulf Coast	TX	Angelina	345.230	345.311	0.081	TX005	Attoyac fine sandy loam, 0 to 4 percent slopes	0.000	0.000	0.068	0.081	0.000	0.081	0.000	0.000	0.000
Gulf Coast	TX	Angelina	345.311	345.440	0.129	TX005	Cuthbert fine sandy loam, 5 to 15 percent slopes	0.000	0.103	0.108	0.000	0.000	0.103	0.000	0.103	0.000
Gulf Coast	TX	Angelina	345.440	345.529	0.089	TX005	Bernaldo fine sandy loam, 0 to 3 percent slopes	0.000	0.000	0.075	0.089	0.000	0.078	0.000	0.000	0.000
Gulf Coast	TX	Angelina	345.529	345.607	0.078	TX005	Cuthbert fine sandy loam, 5 to 15 percent slopes	0.000	0.062	0.065	0.000	0.000	0.062	0.000	0.062	0.000
Gulf Coast	TX	Angelina	345.607	346.094	0.487	TX005	Ozias silty clay, frequently flooded	0.000	0.000	0.409	0.000	0.390	0.390	0.000	0.000	0.000
Gulf Coast	TX	Angelina	346.094	346.813	0.719	TX005	Mollville-Besner complex, gently undulating	0.000	0.000	0.604	0.719	0.324	0.647	0.000	0.000	0.000
Gulf Coast	TX	Angelina	346.813	347.173	0.361	TX005	Ozias silty clay, frequently flooded	0.000	0.000	0.303	0.000	0.288	0.288	0.000	0.000	0.000
Gulf Coast	TX	Angelina	347.173	347.239	0.065	TX005	Cuthbert fine sandy loam, 5 to 15 percent slopes	0.000	0.052	0.055	0.000	0.000	0.052	0.000	0.052	0.000
Gulf Coast	TX	Angelina	347.239	347.366	0.128	TX005	Bernaldo fine sandy loam, 0 to 3 percent slopes	0.000	0.000	0.107	0.128	0.000	0.113	0.000	0.000	0.000
Gulf Coast	TX	Angelina	347.366	347.497	0.130	TX005	Attoyac fine sandy loam, 8 to 15 percent slopes	0.000	0.111	0.109	0.000	0.000	0.111	0.000	0.000	0.000
Gulf	TX	Angelina	347.497	347.845	0.349	TX005	Bernaldo fine sandy loam, 0 to 3 percent slopes	0.000	0.000	0.293	0.349	0.000	0.307	0.000	0.000	0.000

Appendix K – Soils by Milepost – Gulf Coast Section

Pipeline Segment		County	Beginning Milepost	Ending Milepost	Miles	Soil Series	Soil Series Name	Wind (miles)	water (miles)	Low revegetation potential (miles)	Prime Farmland (miles)	Hydric (miles)	Compaction Prone (miles)	Stony-Rocky (miles)	Shallow Bedrock (miles)	Droughty (miles)
Coast																
Gulf Coast	TX	Angelina	347.845	348.200	0.355	TX005	Cuthbert fine sandy loam, 5 to 15 percent slopes	0.000	0.284	0.298	0.000	0.000	0.284	0.000	0.284	0.000
Gulf Coast	TX	Angelina	348.200	348.365	0.164	TX005	Bernaldo fine sandy loam, 0 to 3 percent slopes	0.000	0.000	0.138	0.164	0.000	0.145	0.000	0.000	0.000
Gulf Coast	TX	Angelina	348.365	348.479	0.114	TX005	Darco loamy fine sandy, 1 to 8 percent slopes	0.114	0.000	0.096	0.000	0.000	0.114	0.000	0.000	0.114
Gulf Coast	TX	Angelina	348.479	348.554	0.075	TX005	Attoyac fine sandy loam, 8 to 15 percent slopes	0.000	0.063	0.063	0.000	0.000	0.063	0.000	0.000	0.000
Gulf Coast	TX	Angelina	348.554	348.672	0.118	TX005	Darco loamy fine sandy, 1 to 8 percent slopes	0.118	0.000	0.099	0.000	0.000	0.118	0.000	0.000	0.118
Gulf Coast	TX	Angelina	348.672	348.792	0.120	TX005	Attoyac fine sandy loam, 8 to 15 percent slopes	0.000	0.102	0.101	0.000	0.000	0.102	0.000	0.000	0.000
Gulf Coast	TX	Angelina	348.792	348.957	0.165	TX005	Koury loam, frequently flooded	0.000	0.000	0.139	0.000	0.000	0.149	0.000	0.000	0.000
Gulf Coast	TX	Angelina	348.957	349.252	0.296	TX005	Rosenwall fine sandy loam, 5 to 15 percent slopes	0.000	0.266	0.248	0.000	0.000	0.296	0.000	0.059	0.030
Gulf Coast	TX	Angelina	349.252	349.384	0.132	TX005	Kurth fine sandy loam, 0 to 4 percent slopes	0.000	0.000	0.111	0.125	0.000	0.105	0.000	0.000	0.000
Gulf Coast	TX	Angelina	349.384	349.493	0.109	TX005	Rosenwall fine sandy loam, 5 to 15 percent slopes	0.000	0.098	0.091	0.000	0.000	0.109	0.000	0.022	0.011
Gulf Coast	TX	Angelina	349.493	349.650	0.157	TX005	Kurth fine sandy loam, 0 to 4 percent slopes	0.000	0.000	0.132	0.149	0.000	0.126	0.000	0.000	0.000
Gulf Coast	TX	Angelina	349.650	349.782	0.132	TX005	Rosenwall fine sandy loam, 5 to 15 percent slopes	0.000	0.119	0.111	0.000	0.000	0.132	0.000	0.026	0.013
Gulf Coast	TX	Angelina	349.782	349.893	0.111	TX005	Keltys fine sandy loam, 1 to 5 percent slopes	0.000	0.000	0.093	0.111	0.000	0.083	0.000	0.000	0.083
Gulf Coast	TX	Angelina	349.893	350.328	0.436	TX005	Ozias silty clay, frequently flooded	0.000	0.000	0.366	0.000	0.348	0.348	0.000	0.000	0.000
Gulf Coast	TX	Angelina	350.328	350.374	0.045	TX005	Koury loam, frequently flooded	0.000	0.000	0.038	0.000	0.000	0.041	0.000	0.000	0.000
Gulf Coast	TX	Angelina	350.374	350.389	0.015	TX005	Ozias silty clay, frequently flooded	0.000	0.000	0.013	0.000	0.012	0.012	0.000	0.000	0.000
Gulf Coast	TX	Angelina	350.389	350.421	0.032	TX005	Koury loam, frequently flooded	0.000	0.000	0.027	0.000	0.000	0.029	0.000	0.000	0.000
Gulf Coast	TX	Angelina	350.421	350.462	0.041	TX005	Ozias silty clay, frequently flooded	0.000	0.000	0.034	0.000	0.033	0.033	0.000	0.000	0.000
Gulf Coast	TX	Angelina	350.462	350.762	0.299	TX005	Koury loam, frequently flooded	0.000	0.000	0.251	0.000	0.000	0.269	0.000	0.000	0.000
Gulf Coast	TX	Angelina	350.762	350.855	0.093	TX005	Bienville loamy fine sand, 0 to 5 percent slopes	0.074	0.000	0.078	0.000	0.000	0.000	0.000	0.000	0.074
Gulf Coast	TX	Angelina	350.855	351.065	0.211	TX005	Koury loam, frequently flooded	0.000	0.000	0.177	0.000	0.000	0.190	0.000	0.000	0.000
Gulf	TX	Angelina	351.065	351.191	0.125	TX005	Ozias silty clay, frequently flooded	0.000	0.000	0.105	0.000	0.100	0.100	0.000	0.000	0.000

Appendix K – Soils by Milepost – Gulf Coast Section

Pipeline Segment		County	Beginning Milepost	Ending Milepost	Miles	Soil Series	Soil Series Name	Wind (miles)	water (miles)	Low revegetation potential (miles)	Prime Farmland (miles)	Hydric (miles)	Compaction Prone (miles)	Stony-Rocky (miles)	Shallow Bedrock (miles)	Droughty (miles)
Coast																
Gulf Coast	TX	Angelina	351.191	351.243	0.053	TX005	Koury loam, occasionally flooded	0.000	0.000	0.044	0.053	0.000	0.045	0.000	0.000	0.000
Gulf Coast	TX	Angelina	351.243	351.427	0.184	TX005	Rosenwall fine sandy loam, 5 to 15 percent slopes	0.000	0.165	0.154	0.000	0.000	0.184	0.000	0.037	0.018
Gulf Coast	TX	Angelina	351.427	351.479	0.052	TX005	Kurth fine sandy loam, 0 to 4 percent slopes	0.000	0.000	0.044	0.050	0.000	0.042	0.000	0.000	0.000
Gulf Coast	TX	Angelina	351.479	351.628	0.149	TX005	Rosenwall fine sandy loam, 5 to 15 percent slopes	0.000	0.134	0.125	0.000	0.000	0.149	0.000	0.030	0.015
Gulf Coast	TX	Angelina	351.628	351.754	0.126	TX005	Kurth fine sandy loam, 0 to 4 percent slopes	0.000	0.000	0.106	0.120	0.000	0.101	0.000	0.000	0.000
Gulf Coast	TX	Angelina	351.754	351.910	0.155	TX005	Rosenwall fine sandy loam, 5 to 15 percent slopes	0.000	0.140	0.131	0.000	0.000	0.155	0.000	0.031	0.016
Gulf Coast	TX	Angelina	351.910	352.089	0.179	TX005	Herty very fine sandy loam, 1 to 5 percent slopes	0.000	0.000	0.151	0.000	0.000	0.152	0.000	0.000	0.000
Gulf Coast	TX	Angelina	352.089	352.570	0.482	TX005	Fuller fine sandy loam, 1 to 4 percent slopes	0.000	0.000	0.405	0.000	0.000	0.409	0.000	0.409	0.000
Gulf Coast	TX	Angelina	352.570	353.027	0.456	TX005	Rosenwall fine sandy loam, 5 to 15 percent slopes	0.000	0.411	0.383	0.000	0.000	0.456	0.000	0.091	0.046
Gulf Coast	TX	Angelina	353.027	353.155	0.129	TX005	Koury loam, occasionally flooded	0.000	0.000	0.108	0.129	0.000	0.110	0.000	0.000	0.000
Gulf Coast	TX	Angelina	353.155	353.179	0.023	TX005	Fuller fine sandy loam, 1 to 4 percent slopes	0.000	0.000	0.020	0.000	0.000	0.020	0.000	0.020	0.000
Gulf Coast	TX	Angelina	353.179	353.274	0.095	TX005	Rosenwall fine sandy loam, 5 to 15 percent slopes	0.000	0.086	0.080	0.000	0.000	0.095	0.000	0.019	0.010
Gulf Coast	TX	Angelina	353.274	353.485	0.210	TX005	Kurth fine sandy loam, 0 to 4 percent slopes	0.000	0.000	0.177	0.200	0.000	0.168	0.000	0.000	0.000
Gulf Coast	TX	Angelina	353.485	353.620	0.135	TX005	Fuller fine sandy loam, 1 to 4 percent slopes	0.000	0.000	0.114	0.000	0.000	0.115	0.000	0.115	0.000
Gulf Coast	TX	Angelina	353.620	353.811	0.190	TX005	Kurth fine sandy loam, 0 to 4 percent slopes	0.000	0.000	0.160	0.181	0.000	0.152	0.000	0.000	0.000
Gulf Coast	TX	Angelina	353.811	353.993	0.183	TX005	Fuller fine sandy loam, 1 to 4 percent slopes	0.000	0.000	0.153	0.000	0.000	0.155	0.000	0.155	0.000
Gulf Coast	TX	Angelina	353.993	354.069	0.076	TX005	Keltys fine sandy loam, 5 to 15 percent slopes	0.000	0.000	0.064	0.000	0.000	0.072	0.000	0.000	0.060
Gulf Coast	TX	Angelina	354.069	354.126	0.058	TX005	Fuller fine sandy loam, 1 to 4 percent slopes	0.000	0.000	0.048	0.000	0.000	0.049	0.000	0.049	0.000
Gulf Coast	TX	Angelina	354.126	354.158	0.031	TX005	Keltys fine sandy loam, 5 to 15 percent slopes	0.000	0.000	0.026	0.000	0.000	0.030	0.000	0.000	0.025
Gulf Coast	TX	Angelina	354.158	354.284	0.127	TX005	Fuller fine sandy loam, 1 to 4 percent slopes	0.000	0.000	0.106	0.000	0.000	0.108	0.000	0.108	0.000
Gulf Coast	TX	Angelina	354.284	354.407	0.123	TX005	Keltys fine sandy loam, 5 to 15 percent slopes	0.000	0.000	0.103	0.000	0.000	0.117	0.000	0.000	0.098
Gulf	TX	Angelina	354.407	354.802	0.395	TX005	Kurth fine sandy loam, 0 to 4 percent slopes	0.000	0.000	0.000	0.375	0.000	0.316	0.000	0.000	0.000

Appendix K – Soils by Milepost – Gulf Coast Section

Pipeline Segment		County	Beginning Milepost	Ending Milepost	Miles	Soil Series	Soil Series Name	Wind (miles)	water (miles)	Low revegetation potential (miles)	Prime Farmland (miles)	Hydric (miles)	Compaction Prone (miles)	Stony-Rocky (miles)	Shallow Bedrock (miles)	Droughty (miles)
Coast																
Gulf Coast	TX	Angelina	354.802	354.854	0.053	TX005	Rosenwall fine sandy loam, 5 to 15 percent slopes	0.000	0.047	0.000	0.000	0.000	0.053	0.000	0.011	0.005
Gulf Coast	TX	Angelina	354.854	354.933	0.079	TX005	Alazan very fine sandy loam, 0 to 4 percent slopes	0.000	0.000	0.000	0.079	0.000	0.063	0.000	0.000	0.000
Gulf Coast	TX	Angelina	354.933	355.090	0.157	TX005	Kurth fine sandy loam, 0 to 4 percent slopes	0.000	0.000	0.000	0.149	0.000	0.126	0.000	0.000	0.000
Gulf Coast	TX	Angelina	355.090	355.127	0.037	TX005	Rosenwall fine sandy loam, 1 to 5 percent slopes	0.000	0.000	0.004	0.000	0.000	0.037	0.000	0.007	0.004
Gulf Coast	TX	Angelina	355.127	355.304	0.177	TX005	Fuller fine sandy loam, 1 to 4 percent slopes	0.000	0.000	0.151	0.000	0.000	0.151	0.000	0.151	0.000
Gulf Coast	TX	Angelina	355.304	355.340	0.036	TX005	Keltys fine sandy loam, 5 to 15 percent slopes	0.000	0.000	0.029	0.000	0.000	0.034	0.000	0.000	0.029
Gulf Coast	TX	Angelina	355.340	355.552	0.212	TX005	Rosenwall fine sandy loam, 5 to 15 percent slopes	0.000	0.191	0.000	0.000	0.000	0.212	0.000	0.042	0.021
Gulf Coast	TX	Angelina	355.552	355.682	0.130	TX005	Keltys fine sandy loam, 1 to 5 percent slopes	0.000	0.000	0.097	0.130	0.000	0.097	0.000	0.000	0.097
Gulf Coast	TX	Angelina	355.682	355.741	0.059	TX005	Rosenwall fine sandy loam, 5 to 15 percent slopes	0.000	0.053	0.000	0.000	0.000	0.059	0.000	0.012	0.006
Gulf Coast	TX	Angelina	355.741	355.810	0.069	TX005	Rosenwall fine sandy loam, 1 to 5 percent slopes	0.000	0.000	0.007	0.000	0.000	0.069	0.000	0.014	0.007
Gulf Coast	TX	Angelina	355.810	355.911	0.102	TX005	Rosenwall fine sandy loam, 5 to 15 percent slopes	0.000	0.092	0.000	0.000	0.000	0.102	0.000	0.020	0.010
Gulf Coast	TX	Angelina	355.911	356.047	0.136	TX005	Rosenwall fine sandy loam, 1 to 5 percent slopes	0.000	0.000	0.014	0.000	0.000	0.136	0.000	0.027	0.014
Gulf Coast	TX	Angelina	356.047	356.182	0.135	TX005	Kurth fine sandy loam, 0 to 4 percent slopes	0.000	0.000	0.000	0.128	0.000	0.108	0.000	0.000	0.000
Gulf Coast	TX	Angelina	356.182	356.246	0.064	TX005	Rosenwall fine sandy loam, 5 to 15 percent slopes	0.000	0.058	0.000	0.000	0.000	0.064	0.000	0.013	0.006
Gulf Coast	TX	Angelina	356.246	356.313	0.067	TX005	Keltys fine sandy loam, 5 to 15 percent slopes	0.000	0.000	0.054	0.000	0.000	0.064	0.000	0.000	0.054
Gulf Coast	TX	Angelina	356.313	356.638	0.325	TX005	Kurth fine sandy loam, 0 to 4 percent slopes	0.000	0.000	0.000	0.309	0.000	0.260	0.000	0.000	0.000
Gulf Coast	TX	Angelina	356.638	356.688	0.050	TX005	Koury loam, frequently flooded	0.000	0.000	0.045	0.000	0.000	0.045	0.000	0.000	0.000
Gulf Coast	TX	Angelina	356.688	356.717	0.029	TX005	Rosenwall fine sandy loam, 5 to 15 percent slopes	0.000	0.026	0.000	0.000	0.000	0.029	0.000	0.006	0.003
Gulf Coast	TX	Angelina	356.717	357.346	0.629	TX005	Fuller fine sandy loam, 1 to 4 percent slopes	0.000	0.000	0.534	0.000	0.000	0.534	0.000	0.534	0.000
Gulf Coast	TX	Angelina	357.346	357.389	0.043	TX005	Moswell loam, 5 to 15 percent slopes	0.000	0.034	0.039	0.000	0.000	0.043	0.004	0.039	0.000
Gulf Coast	TX	Angelina	357.389	357.588	0.199	TX005	Darco loamy fine sandy, 1 to 8 percent slopes	0.199	0.000	0.000	0.000	0.000	0.199	0.000	0.000	0.199
Gulf	TX	Angelina	357.588	357.697	0.109	TX005	Moswell loam, 5 to 15 percent slopes	0.000	0.087	0.098	0.000	0.000	0.109	0.011	0.098	0.000

Appendix K – Soils by Milepost – Gulf Coast Section

Pipeline Segment		County	Beginning Milepost	Ending Milepost	Miles	Soil Series	Soil Series Name	Wind (miles)	water (miles)	Low revegetation potential (miles)	Prime Farmland (miles)	Hydric (miles)	Compaction Prone (miles)	Stony-Rocky (miles)	Shallow Bedrock (miles)	Droughty (miles)
Coast																
Gulf Coast	TX	Angelina	357.697	357.911	0.214	TX005	Fuller fine sandy loam, 1 to 4 percent slopes	0.000	0.000	0.182	0.000	0.000	0.182	0.000	0.182	0.000
Gulf Coast	TX	Angelina	357.911	357.990	0.080	TX005	Moten-Mutley complex, gently undulating	0.000	0.000	0.072	0.080	0.000	0.072	0.000	0.000	0.000
Gulf Coast	TX	Angelina	357.990	358.945	0.954	TX005	Ozias silty clay, frequently flooded	0.000	0.000	0.764	0.000	0.764	0.764	0.000	0.000	0.000
Gulf Coast	TX	Angelina	358.945	359.017	0.073	TX005	Attoyac fine sandy loam, 8 to 15 percent slopes	0.000	0.062	0.000	0.000	0.000	0.062	0.000	0.000	0.000
Gulf Coast	TX	Angelina	359.017	359.845	0.828	TX005	Moten-Mutley complex, gently undulating	0.000	0.000	0.745	0.828	0.000	0.745	0.000	0.000	0.000
Gulf Coast	TX	Angelina	359.845	360.004	0.159	TX005	Keltys fine sandy loam, 1 to 5 percent slopes	0.000	0.000	0.119	0.159	0.000	0.119	0.000	0.000	0.119
Gulf Coast	TX	Angelina	360.004	360.364	0.360	TX005	Fuller fine sandy loam, 1 to 4 percent slopes	0.000	0.000	0.306	0.000	0.000	0.306	0.000	0.306	0.000
Gulf Coast	TX	Angelina	360.364	360.499	0.135	TX005	Keltys fine sandy loam, 1 to 5 percent slopes	0.000	0.000	0.101	0.135	0.000	0.101	0.000	0.000	0.101
Gulf Coast	TX	Angelina	360.499	361.192	0.692	TX005	Fuller fine sandy loam, 1 to 4 percent slopes	0.000	0.000	0.588	0.000	0.000	0.588	0.000	0.588	0.000
Gulf Coast	TX	Angelina	361.192	361.757	0.565	TX005	Moten-Mutley complex, gently undulating	0.000	0.000	0.509	0.565	0.000	0.509	0.000	0.000	0.000
Gulf Coast	TX	Angelina	361.757	362.021	0.265	TX005	Koury loam, frequently flooded	0.000	0.000	0.238	0.000	0.000	0.238	0.000	0.000	0.000
Gulf Coast	TX	Angelina	362.021	362.160	0.139	TX005	Bienville loamy fine sand, 0 to 5 percent slopes	0.111	0.000	0.000	0.000	0.000	0.000	0.000	0.000	0.111
Gulf Coast	TX	Angelina	362.160	362.456	0.296	TX005	Moten-Mutley complex, gently undulating	0.000	0.000	0.266	0.296	0.000	0.266	0.000	0.000	0.000
Gulf Coast	TX	Angelina	362.456	362.487	0.031	TX005	Keltys fine sandy loam, 1 to 5 percent slopes	0.000	0.000	0.023	0.031	0.000	0.023	0.000	0.000	0.023
Gulf Coast	TX	Angelina	362.487	362.998	0.512	TX005	Moten-Mutley complex, gently undulating	0.000	0.000	0.461	0.512	0.000	0.461	0.000	0.000	0.000
Gulf Coast	TX	Angelina	362.998	363.174	0.175	TX005	Keltys fine sandy loam, 1 to 5 percent slopes	0.000	0.000	0.131	0.175	0.000	0.131	0.000	0.000	0.131
Gulf Coast	TX	Angelina	363.174	363.588	0.414	TX005	Alazan very fine sandy loam, 0 to 4 percent slopes	0.000	0.000	0.000	0.414	0.000	0.331	0.000	0.000	0.000
Gulf Coast	TX	Angelina	363.588	364.020	0.433	TX005	Ozias silty clay, frequently flooded	0.000	0.000	0.346	0.000	0.346	0.346	0.000	0.000	0.000
Gulf Coast	TX	Angelina	364.020	364.112	0.092	TX005	Koury loam, frequently flooded	0.000	0.000	0.082	0.000	0.000	0.082	0.000	0.000	0.000
Gulf Coast	TX	Angelina	364.112	364.289	0.177	TX005	Moten-Mutley complex, gently undulating	0.000	0.000	0.159	0.177	0.000	0.159	0.000	0.000	0.000
Gulf Coast	TX	Angelina	364.289	364.349	0.060	TX005	Ozias silty clay, frequently flooded	0.000	0.000	0.048	0.000	0.048	0.048	0.000	0.000	0.000
Gulf	TX	Angelina	364.349	364.715	0.366	TX005	Moten-Mutley complex, gently undulating	0.000	0.000	0.330	0.366	0.000	0.330	0.000	0.000	0.000

Appendix K – Soils by Milepost – Gulf Coast Section

Pipeline Segment		County	Beginning Milepost	Ending Milepost	Miles	Soil Series	Soil Series Name	Wind (miles)	water (miles)	Low revegetation potential (miles)	Prime Farmland (miles)	Hydric (miles)	Compaction Prone (miles)	Stony-Rocky (miles)	Shallow Bedrock (miles)	Droughty (miles)
Coast																
Gulf Coast	TX	Angelina	364.715	364.728	0.013	TX005	Mollville-Besner complex, gently undulating	0.000	0.000	0.006	0.013	0.006	0.011	0.000	0.000	0.000
Gulf Coast	TX	Angelina	364.728	365.099	0.371	TX005	Moten-Mutley complex, gently undulating	0.000	0.000	0.334	0.371	0.000	0.334	0.000	0.000	0.000
Gulf Coast	TX	Angelina	365.099	365.175	0.076	TX005	Mollville-Besner complex, gently undulating	0.000	0.000	0.034	0.076	0.034	0.069	0.000	0.000	0.000
Gulf Coast	TX	Angelina	365.175	365.359	0.185	TX005	Koury loam, frequently flooded	0.000	0.000	0.166	0.000	0.000	0.166	0.000	0.000	0.000
Gulf Coast	TX	Angelina	365.359	365.986	0.626	TX005	Ozias silty clay, frequently flooded	0.000	0.000	0.501	0.000	0.501	0.501	0.000	0.000	0.000
Gulf Coast	TX	Polk	365.986	367.232	1.246	TX617	Millboro-Boro silty clays, 6 to 9 percent slopes, PA2	0.000	0.000	1.059	0.000	1.059	1.059	0.000	0.000	0.000
Gulf Coast	TX	Polk	367.232	367.577	0.346	TX617	Millboro-Boro silty clays, 6 to 9 percent slopes, PA2	0.000	0.000	0.294	0.000	0.294	0.294	0.000	0.000	0.000
Gulf Coast	TX	Polk	367.577	367.828	0.251	TX617	Millboro-Boro silty clays, 6 to 9 percent slopes, PA2	0.000	0.000	0.213	0.000	0.213	0.213	0.000	0.000	0.000
Gulf Coast	TX	Polk	367.828	368.102	0.274	TX617	Millboro-Boro silty clays, 6 to 9 percent slopes, PA2	0.000	0.000	0.233	0.000	0.233	0.233	0.000	0.000	0.000
Gulf Coast	TX	Polk	368.102	368.561	0.460	TX617	Millboro-Boro silty clays, 6 to 9 percent slopes, PA2	0.000	0.368	0.368	0.000	0.000	0.368	0.000	0.368	0.000
Gulf Coast	TX	Polk	368.561	368.759	0.198	TX617	Millboro-Boro silty clays, 6 to 9 percent slopes, PA2	0.000	0.000	0.159	0.000	0.000	0.159	0.000	0.159	0.000
Gulf Coast	TX	Polk	368.759	369.392	0.632	TX617	Millboro-Boro silty clays, 6 to 9 percent slopes, PA2	0.000	0.506	0.506	0.000	0.000	0.506	0.000	0.506	0.000
Gulf Coast	TX	Polk	369.392	370.075	0.684	TX617	Millboro-Boro silty clays, 6 to 9 percent slopes, PA2	0.000	0.000	0.479	0.000	0.000	0.479	0.000	0.000	0.000
Gulf Coast	TX	Polk	370.075	370.372	0.297	TX617	Millboro-Boro silty clays, 6 to 9 percent slopes, PA2	0.000	0.000	0.223	0.000	0.000	0.223	0.000	0.119	0.104
Gulf Coast	TX	Polk	370.372	370.559	0.187	TX617	Millboro-Boro silty clays, 6 to 9 percent slopes, PA2	0.000	0.000	0.000	0.000	0.000	0.094	0.000	0.000	0.000
Gulf Coast	TX	Polk	370.559	370.731	0.172	TX617	Millboro-Boro silty clays, 6 to 9 percent slopes, PA2	0.000	0.138	0.138	0.000	0.000	0.138	0.000	0.138	0.000
Gulf Coast	TX	Polk	370.731	371.164	0.432	TX617	Millboro-Boro silty clays, 6 to 9 percent slopes, PA2	0.000	0.000	0.324	0.000	0.000	0.324	0.000	0.173	0.151
Gulf Coast	TX	Polk	371.164	371.295	0.131	TX617	Millboro-Boro silty clays, 6 to 9 percent slopes, PA2	0.052	0.000	0.000	0.000	0.098	0.098	0.000	0.000	0.000
Gulf Coast	TX	Polk	371.295	371.649	0.354	TX617	Millboro-Boro silty clays, 6 to 9 percent slopes, PA2	0.000	0.000	0.266	0.000	0.000	0.266	0.000	0.142	0.124
Gulf Coast	TX	Polk	371.649	371.742	0.094	TX617	Millboro-Boro silty clays, 6 to 9 percent slopes, PA2	0.037	0.000	0.000	0.000	0.070	0.070	0.000	0.000	0.000
Gulf Coast	TX	Polk	371.742	371.920	0.178	TX617	Millboro-Boro silty clays, 6 to 9 percent slopes, PA2	0.000	0.000	0.133	0.000	0.000	0.133	0.000	0.071	0.062
Gulf	TX	Polk	371.920	372.164	0.244	TX617	Millboro-Boro silty clays, 6 to 9 percent slopes, PA2	0.097	0.000	0.000	0.000	0.183	0.183	0.000	0.000	0.000

Appendix K – Soils by Milepost – Gulf Coast Section

Pipeline Segment		County	Beginning Milepost	Ending Milepost	Miles	Soil Series	Soil Series Name	Wind (miles)	water (miles)	Low revegetation potential (miles)	Prime Farmland (miles)	Hydric (miles)	Compaction Prone (miles)	Stony-Rocky (miles)	Shallow Bedrock (miles)	Droughty (miles)
Coast																
Gulf Coast	TX	Polk	372.164	372.541	0.377	TX617	Millboro-Boro silty clays, 6 to 9 percent slopes, PA2	0.000	0.000	0.283	0.000	0.000	0.283	0.000	0.151	0.132
Gulf Coast	TX	Polk	372.541	372.955	0.414	TX617	Millboro-Boro silty clays, 6 to 9 percent slopes, PA2	0.166	0.000	0.000	0.000	0.311	0.311	0.000	0.000	0.000
Gulf Coast	TX	Polk	372.955	372.997	0.042	TX617	Millboro-Boro silty clays, 6 to 9 percent slopes, PA2	0.000	0.033	0.033	0.000	0.000	0.033	0.000	0.033	0.000
Gulf Coast	TX	Polk	372.997	373.459	0.462	TX617	Millboro-Boro silty clays, 6 to 9 percent slopes, PA2	0.462	0.000	0.000	0.000	0.000	0.416	0.000	0.000	0.416
Gulf Coast	TX	Polk	373.459	374.196	0.737	TX617	Millboro-Boro silty clays, 6 to 9 percent slopes, PA2	0.295	0.000	0.000	0.000	0.553	0.553	0.000	0.000	0.000
Gulf Coast	TX	Polk	374.196	375.385	1.189	TX617	Millboro-Boro silty clays, 6 to 9 percent slopes, PA2	0.000	0.000	0.892	0.000	0.000	0.892	0.000	0.476	0.416
Gulf Coast	TX	Polk	375.385	375.816	0.431	TX617	Millboro-Boro silty clays, 6 to 9 percent slopes, PA2	0.000	0.000	0.000	0.431	0.000	0.172	0.000	0.000	0.151
Gulf Coast	TX	Polk	375.816	375.881	0.065	TX617	Millboro-Boro silty clays, 6 to 9 percent slopes, PA2	0.000	0.000	0.000	0.000	0.000	0.032	0.000	0.000	0.000
Gulf Coast	TX	Polk	375.881	375.914	0.033	TX617	Millboro-Boro silty clays, 6 to 9 percent slopes, PA2	0.000	0.000	0.000	0.033	0.000	0.013	0.000	0.000	0.012
Gulf Coast	TX	Polk	375.914	376.068	0.154	TX617	Millboro-Boro silty clays, 6 to 9 percent slopes, PA2	0.000	0.000	0.000	0.000	0.000	0.077	0.000	0.000	0.000
Gulf Coast	TX	Polk	376.068	376.214	0.146	TX617	Millboro-Boro silty clays, 6 to 9 percent slopes, PA2	0.000	0.000	0.000	0.146	0.000	0.058	0.000	0.000	0.051
Gulf Coast	TX	Polk	376.214	376.309	0.095	TX617	Millboro-Boro silty clays, 6 to 9 percent slopes, PA2	0.000	0.000	0.000	0.000	0.000	0.047	0.000	0.000	0.000
Gulf Coast	TX	Polk	376.309	376.592	0.284	TX617	Millboro-Boro silty clays, 6 to 9 percent slopes, PA2	0.000	0.000	0.000	0.284	0.000	0.113	0.000	0.000	0.099
Gulf Coast	TX	Polk	376.592	376.837	0.245	TX617	Millboro-Boro silty clays, 6 to 9 percent slopes, PA2	0.000	0.000	0.000	0.245	0.000	0.000	0.000	0.000	0.184
Gulf Coast	TX	Polk	376.837	376.989	0.152	TX617	Millboro-Boro silty clays, 6 to 9 percent slopes, PA2	0.000	0.000	0.000	0.000	0.000	0.076	0.000	0.000	0.000
Gulf Coast	TX	Polk	376.989	377.045	0.056	TX617	Millboro-Boro silty clays, 6 to 9 percent slopes, PA2	0.000	0.000	0.000	0.056	0.000	0.022	0.000	0.000	0.020
Gulf Coast	TX	Polk	377.045	377.167	0.122	TX617	Millboro-Boro silty clays, 6 to 9 percent slopes, PA2	0.000	0.000	0.000	0.000	0.000	0.061	0.000	0.000	0.000
Gulf Coast	TX	Polk	377.167	377.521	0.354	TX617	Millboro-Boro silty clays, 6 to 9 percent slopes, PA2	0.000	0.283	0.000	0.000	0.000	0.283	0.000	0.000	0.000
Gulf Coast	TX	Polk	377.521	377.758	0.237	TX617	Millboro-Boro silty clays, 6 to 9 percent slopes, PA2	0.000	0.000	0.000	0.237	0.000	0.095	0.000	0.000	0.083
Gulf Coast	TX	Polk	377.758	377.985	0.227	TX617	Millboro-Boro silty clays, 6 to 9 percent slopes, PA2	0.000	0.000	0.000	0.227	0.000	0.000	0.000	0.000	0.170
Gulf Coast	TX	Polk	377.985	378.098	0.113	TX617	Millboro-Boro silty clays, 6 to 9 percent slopes, PA2	0.045	0.000	0.000	0.000	0.085	0.085	0.000	0.000	0.000
Gulf	TX	Polk	378.098	378.198	0.099	TX617	Millboro-Boro silty clays, 6 to 9 percent slopes, PA2	0.000	0.000	0.000	0.099	0.000	0.040	0.000	0.000	0.035

Appendix K – Soils by Milepost – Gulf Coast Section

Pipeline Segment		County	Beginning Milepost	Ending Milepost	Miles	Soil Series	Soil Series Name	Wind (miles)	water (miles)	Low revegetation potential (miles)	Prime Farmland (miles)	Hydric (miles)	Compaction Prone (miles)	Stony-Rocky (miles)	Shallow Bedrock (miles)	Droughty (miles)
Coast																
Gulf Coast	TX	Polk	378.198	378.365	0.167	TX617	Millboro-Boro silty clays, 6 to 9 percent slopes, PA2	0.000	0.000	0.000	0.000	0.000	0.084	0.000	0.000	0.000
Gulf Coast	TX	Polk	378.365	378.628	0.264	TX617	Millboro-Boro silty clays, 6 to 9 percent slopes, PA2	0.000	0.000	0.000	0.264	0.000	0.105	0.000	0.000	0.092
Gulf Coast	TX	Polk	378.628	378.821	0.193	TX617	Millboro-Boro silty clays, 6 to 9 percent slopes, PA2	0.077	0.000	0.000	0.000	0.145	0.145	0.000	0.000	0.000
Gulf Coast	TX	Polk	378.821	378.932	0.111	TX617	Millboro-Boro silty clays, 6 to 9 percent slopes, PA2	0.000	0.000	0.000	0.111	0.000	0.044	0.000	0.000	0.039
Gulf Coast	TX	Polk	378.932	379.096	0.164	TX617	Millboro-Boro silty clays, 6 to 9 percent slopes, PA2	0.066	0.000	0.000	0.000	0.123	0.123	0.000	0.000	0.000
Gulf Coast	TX	Polk	379.096	379.498	0.402	TX617	Millboro-Boro silty clays, 6 to 9 percent slopes, PA2	0.000	0.322	0.000	0.000	0.000	0.322	0.000	0.000	0.000
Gulf Coast	TX	Polk	379.498	380.557	1.059	TX617	Millboro-Boro silty clays, 6 to 9 percent slopes, PA2	0.000	0.000	0.000	1.059	0.000	0.423	0.000	0.000	0.371
Gulf Coast	TX	Polk	380.557	380.721	0.164	TX617	Millboro-Boro silty clays, 6 to 9 percent slopes, PA2	0.066	0.000	0.000	0.000	0.123	0.123	0.000	0.000	0.000
Gulf Coast	TX	Polk	380.721	381.064	0.343	TX617	Millboro-Boro silty clays, 6 to 9 percent slopes, PA2	0.000	0.000	0.000	0.000	0.000	0.292	0.000	0.000	0.000
Gulf Coast	TX	Polk	381.064	381.169	0.105	TX617	Millboro-Boro silty clays, 6 to 9 percent slopes, PA2	0.000	0.084	0.000	0.000	0.000	0.084	0.000	0.000	0.000
Gulf Coast	TX	Polk	381.169	381.309	0.140	TX617	Millboro-Boro silty clays, 6 to 9 percent slopes, PA2	0.000	0.000	0.000	0.000	0.000	0.119	0.000	0.000	0.000
Gulf Coast	TX	Polk	381.309	381.840	0.531	TX617	Millboro-Boro silty clays, 6 to 9 percent slopes, PA2	0.000	0.425	0.000	0.000	0.000	0.425	0.000	0.000	0.000
Gulf Coast	TX	Polk	381.840	382.148	0.308	TX617	Millboro-Boro silty clays, 6 to 9 percent slopes, PA2	0.000	0.000	0.000	0.308	0.000	0.246	0.000	0.000	0.000
Gulf Coast	TX	Polk	382.148	382.502	0.354	TX617	Millboro-Boro silty clays, 6 to 9 percent slopes, PA2	0.000	0.283	0.000	0.000	0.000	0.283	0.000	0.000	0.000
Gulf Coast	TX	Polk	382.502	383.171	0.670	TX617	Millboro-Boro silty clays, 6 to 9 percent slopes, PA2	0.000	0.469	0.000	0.000	0.000	0.469	0.000	0.268	0.000
Gulf Coast	TX	Polk	383.171	385.480	2.309	TX617	Millboro-Boro silty clays, 6 to 9 percent slopes, PA2	0.000	0.000	0.000	2.309	0.000	1.847	0.000	0.000	0.000
Gulf Coast	TX	Polk	385.480	385.778	0.298	TX617	Millboro-Boro silty clays, 6 to 9 percent slopes, PA2	0.000	0.209	0.000	0.000	0.000	0.209	0.000	0.119	0.000
Gulf Coast	TX	Polk	385.778	385.947	0.169	TX617	Millboro-Boro silty clays, 6 to 9 percent slopes, PA2	0.000	0.000	0.000	0.000	0.127	0.127	0.000	0.000	0.000
Gulf Coast	TX	Polk	385.947	386.280	0.333	TX617	Millboro-Boro silty clays, 6 to 9 percent slopes, PA2	0.000	0.266	0.000	0.000	0.000	0.266	0.000	0.000	0.000
Gulf Coast	TX	Polk	386.280	386.471	0.191	TX617	Millboro-Boro silty clays, 6 to 9 percent slopes, PA2	0.000	0.000	0.000	0.000	0.000	0.153	0.000	0.000	0.000
Gulf Coast	TX	Polk	386.471	387.002	0.531	TX617	Millboro-Boro silty clays, 6 to 9 percent slopes, PA2	0.478	0.000	0.000	0.000	0.000	0.478	0.000	0.000	0.424
Gulf	TX	Polk	387.002	387.137	0.135	TX617	Millboro-Boro silty clays, 6 to 9 percent slopes, PA2	0.000	0.000	0.000	0.135	0.000	0.108	0.000	0.000	0.000

Appendix K – Soils by Milepost – Gulf Coast Section

Pipeline Segment		County	Beginning Milepost	Ending Milepost	Miles	Soil Series	Soil Series Name	Wind (miles)	water (miles)	Low revegetation potential (miles)	Prime Farmland (miles)	Hydric (miles)	Compaction Prone (miles)	Stony-Rocky (miles)	Shallow Bedrock (miles)	Droughty (miles)
Coast																
Gulf Coast	TX	Polk	387.137	387.434	0.297	TX617	Millboro-Boro silty clays, 6 to 9 percent slopes, PA2	0.000	0.000	0.000	0.000	0.000	0.237	0.000	0.000	0.000
Gulf Coast	TX	Polk	387.434	387.624	0.191	TX617	Millboro-Boro silty clays, 6 to 9 percent slopes, PA2	0.000	0.133	0.000	0.000	0.000	0.133	0.000	0.076	0.000
Gulf Coast	TX	Polk	387.624	387.806	0.182	TX617	Millboro-Boro silty clays, 6 to 9 percent slopes, PA2	0.000	0.000	0.000	0.182	0.000	0.173	0.000	0.000	0.000
Gulf Coast	TX	Polk	387.806	387.997	0.191	TX617	Millboro-Boro silty clays, 6 to 9 percent slopes, PA2	0.000	0.000	0.000	0.000	0.143	0.143	0.000	0.000	0.000
Gulf Coast	TX	Polk	387.997	388.181	0.184	TX617	Millboro-Boro silty clays, 6 to 9 percent slopes, PA2	0.000	0.000	0.000	0.184	0.000	0.175	0.000	0.000	0.000
Gulf Coast	TX	Polk	388.181	388.248	0.067	TX617	Millboro-Boro silty clays, 6 to 9 percent slopes, PA2	0.000	0.000	0.000	0.000	0.000	0.054	0.000	0.000	0.000
Gulf Coast	TX	Polk	388.248	388.622	0.374	TX617	Millboro-Boro silty clays, 6 to 9 percent slopes, PA2	0.000	0.000	0.000	0.374	0.000	0.355	0.000	0.000	0.000
Gulf Coast	TX	Polk	388.622	389.046	0.424	TX617	Millboro-Boro silty clays, 6 to 9 percent slopes, PA2	0.000	0.000	0.000	0.424	0.000	0.339	0.000	0.000	0.000
Gulf Coast	TX	Polk	389.046	389.185	0.139	TX617	Millboro-Boro silty clays, 6 to 9 percent slopes, PA2	0.000	0.000	0.000	0.000	0.000	0.112	0.000	0.000	0.000
Gulf Coast	TX	Polk	389.185	389.348	0.163	TX617	Millboro-Boro silty clays, 6 to 9 percent slopes, PA2	0.000	0.000	0.000	0.000	0.000	0.000	0.000	0.000	0.138
Gulf Coast	TX	Polk	389.348	389.701	0.353	TX617	Millboro-Boro silty clays, 6 to 9 percent slopes, PA2	0.000	0.000	0.000	0.000	0.000	0.282	0.000	0.000	0.000
Gulf Coast	TX	Polk	389.701	389.738	0.037	TX617	Millboro-Boro silty clays, 6 to 9 percent slopes, PA2	0.000	0.000	0.000	0.037	0.000	0.032	0.000	0.000	0.000
Gulf Coast	TX	Polk	389.738	389.838	0.100	TX617	Millboro-Boro silty clays, 6 to 9 percent slopes, PA2	0.000	0.000	0.000	0.000	0.000	0.080	0.000	0.000	0.000
Gulf Coast	TX	Polk	389.838	389.882	0.044	TX617	Millboro-Boro silty clays, 6 to 9 percent slopes, PA2	0.000	0.000	0.000	0.044	0.000	0.037	0.000	0.000	0.000
Gulf Coast	TX	Polk	389.882	390.028	0.146	TX617	Millboro-Boro silty clays, 6 to 9 percent slopes, PA2	0.000	0.000	0.000	0.146	0.000	0.139	0.000	0.000	0.000
Gulf Coast	TX	Polk	390.028	390.106	0.078	TX617	Millboro-Boro silty clays, 6 to 9 percent slopes, PA2	0.000	0.000	0.000	0.078	0.000	0.066	0.000	0.000	0.000
Gulf Coast	TX	Polk	390.106	390.406	0.300	TX617	Millboro-Boro silty clays, 6 to 9 percent slopes, PA2	0.000	0.000	0.000	0.000	0.000	0.240	0.000	0.000	0.000
Gulf Coast	TX	Polk	390.406	390.464	0.058	TX617	Millboro-Boro silty clays, 6 to 9 percent slopes, PA2	0.000	0.040	0.000	0.000	0.000	0.040	0.000	0.023	0.000
Gulf Coast	TX	Polk	390.464	390.503	0.039	TX617	Millboro-Boro silty clays, 6 to 9 percent slopes, PA2	0.000	0.000	0.000	0.039	0.000	0.031	0.000	0.000	0.000
Gulf Coast	TX	Polk	390.503	390.705	0.202	TX617	Millboro-Boro silty clays, 6 to 9 percent slopes, PA2	0.000	0.142	0.000	0.000	0.000	0.142	0.000	0.081	0.000
Gulf Coast	TX	Polk	390.705	390.788	0.083	TX617	Millboro-Boro silty clays, 6 to 9 percent slopes, PA2	0.000	0.000	0.000	0.083	0.000	0.067	0.000	0.000	0.000
Gulf	TX	Polk	390.788	390.993	0.205	TX617	Millboro-Boro silty clays, 6 to 9 percent slopes, PA2	0.000	0.000	0.000	0.000	0.000	0.154	0.051	0.000	0.051

Appendix K – Soils by Milepost – Gulf Coast Section

Pipeline Segment		County	Beginning Milepost	Ending Milepost	Miles	Soil Series	Soil Series Name	Wind (miles)	water (miles)	Low revegetation potential (miles)	Prime Farmland (miles)	Hydric (miles)	Compaction Prone (miles)	Stony-Rocky (miles)	Shallow Bedrock (miles)	Droughty (miles)
Coast																
Gulf Coast	TX	Polk	390.993	391.805	0.812	TX617	Millboro-Boro silty clays, 6 to 9 percent slopes, PA2	0.000	0.000	0.000	0.812	0.000	0.649	0.000	0.000	0.000
Gulf Coast	TX	Polk	391.805	391.905	0.100	TX617	Millboro-Boro silty clays, 6 to 9 percent slopes, PA2	0.090	0.000	0.000	0.000	0.000	0.090	0.000	0.000	0.080
Gulf Coast	TX	Polk	391.905	392.050	0.144	TX617	Millboro-Boro silty clays, 6 to 9 percent slopes, PA2	0.000	0.101	0.000	0.000	0.000	0.101	0.000	0.058	0.000
Gulf Coast	TX	Polk	392.050	392.200	0.150	TX617	Millboro-Boro silty clays, 6 to 9 percent slopes, PA2	0.135	0.000	0.000	0.000	0.000	0.135	0.000	0.000	0.120
Gulf Coast	TX	Polk	392.200	392.351	0.151	TX617	Millboro-Boro silty clays, 6 to 9 percent slopes, PA2	0.000	0.106	0.000	0.000	0.000	0.106	0.000	0.060	0.000
Gulf Coast	TX	Polk	392.351	393.162	0.811	TX617	Millboro-Boro silty clays, 6 to 9 percent slopes, PA2	0.000	0.000	0.000	0.811	0.000	0.649	0.000	0.000	0.000
Gulf Coast	TX	Polk	393.162	393.216	0.054	TX617	Millboro-Boro silty clays, 6 to 9 percent slopes, PA2	0.000	0.038	0.000	0.000	0.000	0.038	0.000	0.022	0.000
Gulf Coast	TX	Polk	393.216	393.524	0.308	TX617	Millboro-Boro silty clays, 6 to 9 percent slopes, PA2	0.000	0.000	0.000	0.000	0.231	0.231	0.000	0.000	0.000
Gulf Coast	TX	Polk	393.524	393.615	0.091	TX617	Millboro-Boro silty clays, 6 to 9 percent slopes, PA2	0.064	0.000	0.000	0.000	0.000	0.009	0.000	0.000	0.064
Gulf Coast	TX	Polk	393.615	393.666	0.051	TX617	Millboro-Boro silty clays, 6 to 9 percent slopes, PA2	0.000	0.000	0.000	0.000	0.038	0.038	0.000	0.000	0.000
Gulf Coast	TX	Polk	393.666	394.233	0.567	TX617	Millboro-Boro silty clays, 6 to 9 percent slopes, PA2	0.397	0.000	0.000	0.000	0.000	0.057	0.000	0.000	0.397
Gulf Coast	TX	Polk	394.233	394.589	0.356	TX617	Millboro-Boro silty clays, 6 to 9 percent slopes, PA2	0.000	0.000	0.000	0.000	0.000	0.285	0.000	0.000	0.000
Gulf Coast	TX	Polk	394.589	394.704	0.115	TX617	Millboro-Boro silty clays, 6 to 9 percent slopes, PA2	0.000	0.000	0.000	0.115	0.000	0.098	0.000	0.000	0.000
Gulf Coast	TX	Polk	394.704	395.007	0.303	TX617	Millboro-Boro silty clays, 6 to 9 percent slopes, PA2	0.000	0.000	0.000	0.000	0.000	0.242	0.000	0.000	0.000
Gulf Coast	TX	Polk	395.007	395.593	0.587	TX617	Millboro-Boro silty clays, 6 to 9 percent slopes, PA2	0.000	0.000	0.000	0.587	0.000	0.469	0.000	0.000	0.000
Gulf Coast	TX	Polk	395.593	395.802	0.209	TX617	Millboro-Boro silty clays, 6 to 9 percent slopes, PA2	0.000	0.000	0.000	0.209	0.000	0.177	0.000	0.000	0.000
Gulf Coast	TX	Polk	395.802	395.951	0.149	TX617	Millboro-Boro silty clays, 6 to 9 percent slopes, PA2	0.000	0.000	0.000	0.149	0.000	0.119	0.000	0.000	0.000
Gulf Coast	TX	Polk	395.951	396.171	0.221	TX617	Millboro-Boro silty clays, 6 to 9 percent slopes, PA2	0.000	0.177	0.000	0.000	0.000	0.177	0.000	0.000	0.000
Gulf Coast	TX	Polk	396.171	396.501	0.330	TX617	Millboro-Boro silty clays, 6 to 9 percent slopes, PA2	0.000	0.000	0.000	0.330	0.000	0.264	0.000	0.000	0.000
Gulf Coast	TX	Polk	396.501	396.536	0.035	TX617	Millboro-Boro silty clays, 6 to 9 percent slopes, PA2	0.026	0.000	0.000	0.000	0.000	0.026	0.000	0.000	0.003
Gulf Coast	TX	Polk	396.536	396.652	0.116	TX617	Millboro-Boro silty clays, 6 to 9 percent slopes, PA2	0.000	0.000	0.000	0.116	0.000	0.093	0.000	0.000	0.000
Gulf	TX	Polk	396.652	396.803	0.151	TX617	Millboro-Boro silty clays, 6 to 9 percent slopes, PA2	0.136	0.000	0.000	0.000	0.000	0.136	0.000	0.000	0.121

Appendix K – Soils by Milepost – Gulf Coast Section

Pipeline Segment		County	Beginning Milepost	Ending Milepost	Miles	Soil Series	Soil Series Name	Wind (miles)	water (miles)	Low revegetation potential (miles)	Prime Farmland (miles)	Hydric (miles)	Compaction Prone (miles)	Stony-Rocky (miles)	Shallow Bedrock (miles)	Droughty (miles)
Coast																
Gulf Coast	TX	Polk	396.803	397.165	0.362	TX617	Millboro-Boro silty clays, 6 to 9 percent slopes, PA2	0.000	0.000	0.000	0.362	0.000	0.289	0.000	0.000	0.000
Gulf Coast	TX	Polk	397.165	397.232	0.067	TX617	Millboro-Boro silty clays, 6 to 9 percent slopes, PA2	0.060	0.000	0.000	0.000	0.000	0.060	0.000	0.000	0.054
Gulf Coast	TX	Polk	397.232	397.339	0.108	TX617	Millboro-Boro silty clays, 6 to 9 percent slopes, PA2	0.000	0.000	0.000	0.108	0.000	0.086	0.000	0.000	0.000
Gulf Coast	TX	Polk	397.339	397.433	0.093	TX617	Millboro-Boro silty clays, 6 to 9 percent slopes, PA2	0.084	0.000	0.000	0.000	0.000	0.084	0.000	0.000	0.075
Gulf Coast	TX	Polk	397.433	397.707	0.274	TX617	Millboro-Boro silty clays, 6 to 9 percent slopes, PA2	0.000	0.000	0.000	0.000	0.000	0.219	0.000	0.000	0.000
Gulf Coast	TX	Polk	397.707	398.489	0.782	TX617	Millboro-Boro silty clays, 6 to 9 percent slopes, PA2	0.000	0.000	0.000	0.782	0.000	0.626	0.000	0.000	0.000
Gulf Coast	TX	Polk	398.489	398.769	0.280	TX617	Millboro-Boro silty clays, 6 to 9 percent slopes, PA2	0.196	0.000	0.000	0.000	0.000	0.028	0.000	0.000	0.196
Gulf Coast	TX	Polk	398.769	399.092	0.324	TX617	Millboro-Boro silty clays, 6 to 9 percent slopes, PA2	0.000	0.000	0.000	0.324	0.000	0.259	0.000	0.000	0.000
Gulf Coast	TX	Polk	399.092	400.005	0.913	TX617	Millboro-Boro silty clays, 6 to 9 percent slopes, PA2	0.000	0.639	0.000	0.000	0.000	0.639	0.000	0.365	0.000
Gulf Coast	TX	Polk	400.005	400.633	0.628	TX617	Millboro-Boro silty clays, 6 to 9 percent slopes, PA2	0.000	0.000	0.000	0.000	0.471	0.471	0.000	0.000	0.000
Gulf Coast	TX	Polk	400.633	401.295	0.661	TX617	Millboro-Boro silty clays, 6 to 9 percent slopes, PA2	0.463	0.000	0.000	0.000	0.000	0.066	0.000	0.000	0.463
Gulf Coast	TX	Polk	401.295	401.721	0.427	TX617	Millboro-Boro silty clays, 6 to 9 percent slopes, PA2	0.000	0.000	0.000	0.427	0.000	0.342	0.000	0.000	0.000
Gulf Coast	TX	Polk	401.721	401.956	0.235	TX617	Millboro-Boro silty clays, 6 to 9 percent slopes, PA2	0.000	0.000	0.000	0.235	0.211	0.211	0.000	0.000	0.000
Gulf Coast	TX	Polk	401.956	402.117	0.161	TX617	Millboro-Boro silty clays, 6 to 9 percent slopes, PA2	0.000	0.000	0.000	0.161	0.000	0.129	0.000	0.000	0.000
Gulf Coast	TX	Polk	402.117	402.426	0.309	TX617	Millboro-Boro silty clays, 6 to 9 percent slopes, PA2	0.000	0.000	0.000	0.309	0.278	0.278	0.000	0.000	0.000
Gulf Coast	TX	Polk	402.426	402.560	0.134	TX617	Millboro-Boro silty clays, 6 to 9 percent slopes, PA2	0.000	0.000	0.000	0.134	0.000	0.107	0.000	0.000	0.000
Gulf Coast	TX	Polk	402.560	403.066	0.506	TX617	Millboro-Boro silty clays, 6 to 9 percent slopes, PA2	0.379	0.000	0.000	0.000	0.000	0.379	0.000	0.000	0.051
Gulf Coast	TX	Polk	403.066	405.010	1.944	TX617	Millboro-Boro silty clays, 6 to 9 percent slopes, PA2	0.000	0.000	0.000	1.944	0.000	1.555	0.000	0.000	0.000
Gulf Coast	TX	Polk	405.010	405.043	0.033	TX617	Millboro-Boro silty clays, 6 to 9 percent slopes, PA2	0.000	0.000	0.000	0.033	0.030	0.030	0.000	0.000	0.000
Gulf Coast	TX	Polk	405.043	405.271	0.228	TX617	Millboro-Boro silty clays, 6 to 9 percent slopes, PA2	0.000	0.000	0.000	0.228	0.000	0.183	0.000	0.000	0.000
Gulf Coast	TX	Polk	405.271	405.368	0.097	TX617	Millboro-Boro silty clays, 6 to 9 percent slopes, PA2	0.000	0.000	0.000	0.097	0.087	0.087	0.000	0.000	0.000
Gulf	TX	Polk	405.368	407.175	1.807	TX617	Millboro-Boro silty clays, 6 to 9 percent slopes, PA2	0.000	0.000	0.000	1.807	0.000	1.446	0.000	0.000	0.000

Appendix K – Soils by Milepost – Gulf Coast Section

Pipeline Segment		County	Beginning Milepost	Ending Milepost	Miles	Soil Series	Soil Series Name	Wind (miles)	water (miles)	Low revegetation potential (miles)	Prime Farmland (miles)	Hydric (miles)	Compaction Prone (miles)	Stony-Rocky (miles)	Shallow Bedrock (miles)	Droughty (miles)
Coast																
Gulf Coast	TX	Polk	407.175	407.260	0.085	TX617	Millboro-Boro silty clays, 6 to 9 percent slopes, PA2	0.085	0.000	0.000	0.000	0.000	0.077	0.000	0.000	0.077
Gulf Coast	TX	Polk	407.260	407.323	0.063	TX617	Millboro-Boro silty clays, 6 to 9 percent slopes, PA2	0.000	0.000	0.000	0.063	0.000	0.051	0.000	0.000	0.000
Gulf Coast	TX	Polk	407.323	407.643	0.320	TX617	Millboro-Boro silty clays, 6 to 9 percent slopes, PA2	0.320	0.000	0.000	0.000	0.000	0.288	0.000	0.000	0.288
Gulf Coast	TX	Polk	407.643	407.783	0.140	TX617	Millboro-Boro silty clays, 6 to 9 percent slopes, PA2	0.000	0.000	0.000	0.140	0.000	0.126	0.000	0.000	0.000
Gulf Coast	TX	Polk	407.783	408.344	0.561	TX617	Millboro-Boro silty clays, 6 to 9 percent slopes, PA2	0.000	0.000	0.000	0.561	0.000	0.449	0.000	0.000	0.000
Gulf Coast	TX	Polk	408.344	408.474	0.130	TX617	Millboro-Boro silty clays, 6 to 9 percent slopes, PA2	0.000	0.000	0.000	0.130	0.117	0.117	0.000	0.000	0.000
Gulf Coast	TX	Polk	408.474	408.602	0.129	TX617	Millboro-Boro silty clays, 6 to 9 percent slopes, PA2	0.000	0.000	0.000	0.129	0.000	0.103	0.000	0.000	0.000
Gulf Coast	TX	Polk	408.602	408.836	0.234	TX617	Millboro-Boro silty clays, 6 to 9 percent slopes, PA2	0.000	0.000	0.000	0.234	0.000	0.211	0.000	0.000	0.000
Gulf Coast	TX	Polk	408.836	409.089	0.253	TX617	Millboro-Boro silty clays, 6 to 9 percent slopes, PA2	0.000	0.000	0.000	0.253	0.000	0.202	0.000	0.000	0.000
Gulf Coast	TX	Polk	409.089	409.565	0.476	TX617	Millboro-Boro silty clays, 6 to 9 percent slopes, PA2	0.428	0.000	0.000	0.000	0.000	0.428	0.000	0.000	0.381
Gulf Coast	TX	Polk	409.565	409.666	0.101	TX617	Millboro-Boro silty clays, 6 to 9 percent slopes, PA2	0.000	0.000	0.000	0.101	0.091	0.091	0.000	0.000	0.000
Gulf Coast	TX	Polk	409.666	411.232	1.566	TX617	Millboro-Boro silty clays, 6 to 9 percent slopes, PA2	0.000	0.000	0.000	1.566	0.000	1.253	0.000	0.000	0.000
Gulf Coast	TX	Polk	411.232	411.498	0.266	TX617	Millboro-Boro silty clays, 6 to 9 percent slopes, PA2	0.200	0.000	0.000	0.000	0.000	0.200	0.000	0.000	0.027
Gulf Coast	TX	Liberty	411.498	411.547	0.050	TX291	Choates loamy fine sand, 1 to 3 percent slopes	0.040	0.000	0.000	0.000	0.000	0.040	0.000	0.000	0.000
Gulf Coast	TX	Liberty	411.547	412.190	0.642	TX291	Doucette loamy fine sand, 1 to 3 percent slopes	0.514	0.000	0.000	0.642	0.000	0.514	0.000	0.000	0.514
Gulf Coast	TX	Liberty	412.190	412.308	0.118	TX291	Woodville fine sandy loam, 5 to 8 percent slopes	0.000	0.000	0.000	0.000	0.000	0.106	0.000	0.000	0.000
Gulf Coast	TX	Liberty	412.308	412.508	0.200	TX291	Owentown fine sandy loam, occasionally flooded	0.000	0.000	0.000	0.200	0.000	0.000	0.000	0.000	0.160
Gulf Coast	TX	Liberty	412.508	412.574	0.066	TX291	Dylan clay, 3 to 6 percent slopes	0.000	0.000	0.059	0.000	0.000	0.059	0.000	0.000	0.000
Gulf Coast	TX	Liberty	412.574	413.130	0.557	TX291	Vamont silty clay, 0 to 1 percent slopes	0.000	0.000	0.000	0.557	0.473	0.473	0.000	0.000	0.000
Gulf Coast	TX	Liberty	413.130	414.762	1.632	TX291	Vamont clay, 1 to 3 percent slopes	0.000	0.000	0.000	1.632	0.000	1.387	0.000	0.000	0.000
Gulf Coast	TX	Liberty	414.762	415.447	0.685	TX291	Vamont silty clay, 0 to 1 percent slopes	0.000	0.000	0.000	0.685	0.583	0.583	0.000	0.000	0.000
Gulf	TX	Liberty	415.447	415.705	0.257	TX291	Vamont clay, 1 to 3 percent slopes	0.000	0.000	0.000	0.257	0.000	0.219	0.000	0.000	0.000

Appendix K – Soils by Milepost – Gulf Coast Section

Pipeline Segment		County	Beginning Milepost	Ending Milepost	Miles	Soil Series	Soil Series Name	Wind (miles)	water (miles)	Low revegetation potential (miles)	Prime Farmland (miles)	Hydric (miles)	Compaction Prone (miles)	Stony-Rocky (miles)	Shallow Bedrock (miles)	Droughty (miles)
Coast																
Gulf Coast	TX	Liberty	415.705	416.157	0.452	TX291	Sorter-Dallardsville complex	0.000	0.000	0.000	0.452	0.249	0.136	0.000	0.000	0.136
Gulf Coast	TX	Liberty	416.157	417.411	1.254	TX291	Guyton-Aldine complex	0.000	0.000	0.000	0.000	0.627	1.129	0.000	0.000	0.000
Gulf Coast	TX	Liberty	417.411	417.607	0.196	TX291	Vamont silty clay, 0 to 1 percent slopes	0.000	0.000	0.000	0.196	0.167	0.167	0.000	0.000	0.000
Gulf Coast	TX	Liberty	417.607	417.730	0.123	TX291	Aris silt loam	0.000	0.000	0.000	0.000	0.105	0.105	0.000	0.000	0.000
Gulf Coast	TX	Liberty	417.730	417.843	0.113	TX291	Aldine silt loam, 0 to 2 percent slopes	0.000	0.000	0.000	0.113	0.000	0.090	0.000	0.000	0.000
Gulf Coast	TX	Liberty	417.843	417.914	0.070	TX291	Aris silt loam	0.000	0.000	0.000	0.000	0.060	0.060	0.000	0.000	0.000
Gulf Coast	TX	Liberty	417.914	417.944	0.030	TX291	Aldine silt loam, 0 to 2 percent slopes	0.000	0.000	0.000	0.030	0.000	0.024	0.000	0.000	0.000
Gulf Coast	TX	Liberty	417.944	418.092	0.148	TX291	Aris silt loam	0.000	0.000	0.000	0.000	0.126	0.126	0.000	0.000	0.000
Gulf Coast	TX	Liberty	418.092	418.281	0.188	TX291	Aldine silt loam, 0 to 2 percent slopes	0.000	0.000	0.000	0.188	0.000	0.151	0.000	0.000	0.000
Gulf Coast	TX	Liberty	418.281	418.442	0.161	TX291	Aris silt loam	0.000	0.000	0.000	0.000	0.137	0.137	0.000	0.000	0.000
Gulf Coast	TX	Liberty	418.442	418.604	0.163	TX291	Woodville fine sandy loam, 5 to 8 percent slopes	0.000	0.000	0.000	0.000	0.000	0.146	0.000	0.000	0.000
Gulf Coast	TX	Liberty	418.604	418.694	0.089	TX291	Owentown fine sandy loam, occasionally flooded	0.000	0.000	0.000	0.089	0.000	0.000	0.000	0.000	0.071
Gulf Coast	TX	Liberty	418.694	419.250	0.557	TX291	Woodville fine sandy loam, 5 to 8 percent slopes	0.000	0.000	0.000	0.000	0.000	0.501	0.000	0.000	0.000
Gulf Coast	TX	Liberty	419.250	422.237	2.987	TX291	Aldine-Aris complex	0.000	0.000	0.000	2.987	0.747	2.539	0.000	0.000	0.000
Gulf Coast	TX	Liberty	422.237	422.297	0.061	TX291	Kemah-Aris complex	0.000	0.000	0.000	0.000	0.024	0.057	0.000	0.000	0.000
Gulf Coast	TX	Liberty	422.297	423.315	1.018	TX291	Aldine-Aris complex	0.000	0.000	0.000	1.018	0.254	0.865	0.000	0.000	0.000
Gulf Coast	TX	Liberty	423.315	423.442	0.128	TX291	Waller loam	0.000	0.000	0.000	0.128	0.102	0.102	0.000	0.000	0.000
Gulf Coast	TX	Liberty	423.442	423.728	0.286	TX291	Vamont silty clay, 0 to 1 percent slopes	0.000	0.000	0.000	0.286	0.243	0.243	0.000	0.000	0.000
Gulf Coast	TX	Liberty	423.728	426.242	2.514	TX291	Aldine-Aris complex	0.000	0.000	0.000	2.514	0.628	2.137	0.000	0.000	0.000
Gulf Coast	TX	Liberty	426.242	427.055	0.813	TX291	Verland clay loam	0.000	0.000	0.000	0.000	0.772	0.772	0.000	0.000	0.000
Gulf Coast	TX	Liberty	427.055	427.630	0.575	TX291	Beaumont clay	0.000	0.000	0.000	0.575	0.518	0.518	0.000	0.000	0.000
Gulf	TX	Liberty	427.630	427.799	0.170	TX291	Guyton silt loam	0.000	0.000	0.000	0.000	0.136	0.136	0.000	0.000	0.000

Appendix K – Soils by Milepost – Gulf Coast Section

Pipeline Segment		County	Beginning Milepost	Ending Milepost	Miles	Soil Series	Soil Series Name	Wind (miles)	water (miles)	Low revegetation potential (miles)	Prime Farmland (miles)	Hydric (miles)	Compaction Prone (miles)	Stony-Rocky (miles)	Shallow Bedrock (miles)	Droughty (miles)
Coast																
Gulf Coast	TX	Liberty	427.799	427.815	0.016	TX291	Aldine silt loam, 0 to 2 percent slopes	0.000	0.000	0.000	0.016	0.000	0.013	0.000	0.000	0.000
Gulf Coast	TX	Liberty	427.815	427.970	0.154	TX291	Guyton silt loam	0.000	0.000	0.000	0.000	0.123	0.123	0.000	0.000	0.000
Gulf Coast	TX	Liberty	427.970	428.421	0.451	TX291	Verland clay loam	0.000	0.000	0.000	0.000	0.429	0.429	0.000	0.000	0.000
Gulf Coast	TX	Liberty	428.421	428.671	0.250	TX291	Guyton silt loam	0.000	0.000	0.000	0.000	0.200	0.200	0.000	0.000	0.000
Gulf Coast	TX	Liberty	428.671	428.858	0.188	TX291	Verland clay loam	0.000	0.000	0.000	0.000	0.179	0.179	0.000	0.000	0.000
Gulf Coast	TX	Liberty	428.858	428.861	0.003	TX291	Bernard-Morey complex	0.000	0.000	0.000	0.003	0.000	0.002	0.000	0.000	0.000
Gulf Coast	TX	Liberty	428.861	429.404	0.543	TX291	Estes clay, frequently flooded	0.000	0.000	0.434	0.000	0.434	0.434	0.000	0.000	0.000
Gulf Coast	TX	Liberty	429.404	430.378	0.974	TX291	Anahuac-Aris complex	0.000	0.000	0.000	0.974	0.341	0.828	0.000	0.000	0.000
Gulf Coast	TX	Liberty	430.378	430.991	0.613	TX291	Aldine-Aris complex	0.000	0.000	0.000	0.613	0.153	0.521	0.000	0.000	0.000
Gulf Coast	TX	Liberty	430.991	431.060	0.069	TX291	Aris silt loam	0.000	0.000	0.000	0.000	0.059	0.059	0.000	0.000	0.000
Gulf Coast	TX	Liberty	431.060	431.234	0.174	TX291	Aldine-Aris complex	0.000	0.000	0.000	0.174	0.043	0.148	0.000	0.000	0.000
Gulf Coast	TX	Liberty	431.234	431.344	0.110	TX291	Aris silt loam	0.000	0.000	0.000	0.000	0.093	0.093	0.000	0.000	0.000
Gulf Coast	TX	Liberty	431.344	431.729	0.385	TX291	Kemah-Aris complex	0.000	0.000	0.000	0.000	0.154	0.366	0.000	0.000	0.000
Gulf Coast	TX	Liberty	431.729	431.812	0.083	TX291	Aris silt loam	0.000	0.000	0.000	0.000	0.071	0.071	0.000	0.000	0.000
Gulf Coast	TX	Liberty	431.812	432.518	0.707	TX291	Kemah-Aris complex	0.000	0.000	0.000	0.000	0.283	0.671	0.000	0.000	0.000
Gulf Coast	TX	Liberty	432.518	432.755	0.237	TX291	Guyton-Aldine complex	0.000	0.000	0.000	0.000	0.118	0.213	0.000	0.000	0.000
Gulf Coast	TX	Liberty	432.755	434.546	1.791	TX291	Aldine-Aris complex	0.000	0.000	0.000	1.791	0.448	1.522	0.000	0.000	0.000
Gulf Coast	TX	Liberty	434.546	434.854	0.308	TX291	Aldine silt loam, 0 to 2 percent slopes	0.000	0.000	0.000	0.308	0.000	0.246	0.000	0.000	0.000
Gulf Coast	TX	Liberty	434.854	435.340	0.486	TX291	Aldine-Aris complex	0.000	0.000	0.000	0.486	0.122	0.413	0.000	0.000	0.000
Gulf Coast	TX	Liberty	435.340	435.651	0.310	TX291	Guyton silt loam	0.000	0.000	0.000	0.000	0.248	0.248	0.000	0.000	0.000
Gulf Coast	TX	Hardin	435.651	435.725	0.075	TX199	Manco loam, 0 to 1 percent slopes, frequently flooded	0.000	0.000	0.000	0.000	0.071	0.075	0.000	0.000	0.000
Gulf	TX	Hardin	435.725	435.856	0.130	TX199	Aris-Spindletop complex, 0 to 1 percent slopes	0.000	0.000	0.000	0.130	0.095	0.130	0.000	0.000	0.000

Appendix K – Soils by Milepost – Gulf Coast Section

Pipeline Segment		County	Beginning Milepost	Ending Milepost	Miles	Soil Series	Soil Series Name	Wind (miles)	water (miles)	Low revegetation potential (miles)	Prime Farmland (miles)	Hydric (miles)	Compaction Prone (miles)	Stony-Rocky (miles)	Shallow Bedrock (miles)	Droughty (miles)
Coast																
Gulf Coast	TX	Hardin	435.856	435.906	0.050	TX199	Leton silt loam, 0 to 1 percent slopes	0.000	0.000	0.000	0.000	0.050	0.050	0.000	0.000	0.000
Gulf Coast	TX	Hardin	435.906	436.493	0.587	TX199	Beaumont clay, 0 to 1 percent slopes	0.000	0.000	0.059	0.587	0.528	0.587	0.000	0.000	0.000
Gulf Coast	TX	Hardin	436.493	436.823	0.330	TX199	Manco loam, 0 to 1 percent slopes, frequently flooded	0.000	0.000	0.000	0.000	0.314	0.330	0.000	0.000	0.000
Gulf Coast	TX	Hardin	436.823	436.888	0.065	TX199	Evadale-Texla complex, 0 to 1 percent slopes	0.000	0.000	0.062	0.065	0.039	0.065	0.000	0.000	0.000
Gulf Coast	TX	Hardin	436.888	436.931	0.043	TX199	Bevil clay, 0 to 1 percent slopes	0.000	0.000	0.001	0.043	0.039	0.043	0.000	0.000	0.000
Gulf Coast	TX	Hardin	436.931	437.427	0.496	TX199	Vamont clay, 0 to 1 percent slopes	0.000	0.000	0.025	0.496	0.040	0.496	0.000	0.000	0.000
Gulf Coast	TX	Hardin	437.427	437.509	0.082	TX199	Bevil clay, 0 to 1 percent slopes	0.000	0.000	0.002	0.082	0.075	0.082	0.000	0.000	0.000
Gulf Coast	TX	Hardin	437.509	437.922	0.413	TX199	Evadale-Texla complex, 0 to 1 percent slopes	0.000	0.000	0.393	0.413	0.248	0.413	0.000	0.000	0.000
Gulf Coast	TX	Hardin	437.922	438.479	0.557	TX199	Evadale-Gist complex, 0 to 1 percent slopes	0.000	0.000	0.546	0.557	0.406	0.557	0.000	0.000	0.000
Gulf Coast	TX	Hardin	438.479	438.550	0.072	TX199	Camptown silt loam, 0 to 1 percent slopes	0.000	0.000	0.067	0.000	0.067	0.072	0.000	0.000	0.000
Gulf Coast	TX	Hardin	438.550	438.735	0.184	TX199	Batson very fine sandy loam, 0 to 1 percent slopes	0.000	0.000	0.018	0.184	0.015	0.184	0.000	0.000	0.000
Gulf Coast	TX	Hardin	438.735	439.438	0.704	TX199	Camptown-Batson complex, 0 to 1 percent slopes	0.000	0.000	0.387	0.704	0.352	0.704	0.000	0.000	0.000
Gulf Coast	TX	Hardin	439.438	440.781	1.342	TX199	Evadale-Texla complex, 0 to 1 percent slopes	0.000	0.000	1.275	1.342	0.805	1.342	0.000	0.000	0.000
Gulf Coast	TX	Hardin	440.781	441.157	0.376	TX199	Aris-Spindletop complex, 0 to 1 percent slopes	0.000	0.000	0.000	0.376	0.275	0.376	0.000	0.000	0.000
Gulf Coast	TX	Hardin	441.157	441.265	0.108	TX199	Aris-Levac complex, 0 to 1 percent slopes	0.000	0.000	0.000	0.108	0.078	0.108	0.000	0.000	0.000
Gulf Coast	TX	Hardin	441.265	441.600	0.335	TX199	Aris-Spindletop complex, 0 to 1 percent slopes	0.000	0.000	0.000	0.335	0.244	0.335	0.000	0.000	0.000
Gulf Coast	TX	Hardin	441.600	441.912	0.312	TX199	Labelle-Spindletop complex, 0 to 1 percent slopes	0.000	0.000	0.000	0.312	0.031	0.312	0.000	0.000	0.000
Gulf Coast	TX	Hardin	441.912	441.992	0.081	TX199	Bevil clay, 0 to 1 percent slopes	0.000	0.000	0.002	0.081	0.074	0.081	0.000	0.000	0.000
Gulf Coast	TX	Hardin	441.992	442.085	0.092	TX199	Aris-Spindletop complex, 0 to 1 percent slopes	0.000	0.000	0.000	0.092	0.067	0.092	0.000	0.000	0.000
Gulf Coast	TX	Hardin	442.085	443.247	1.163	TX199	Evadale-Texla complex, 0 to 1 percent slopes	0.000	0.000	1.104	1.163	0.698	1.163	0.000	0.000	0.000
Gulf Coast	TX	Hardin	443.247	443.434	0.186	TX199	Manco loam, 0 to 1 percent slopes, frequently flooded	0.000	0.000	0.000	0.000	0.177	0.186	0.000	0.000	0.000
Gulf	TX	Hardin	443.434	443.795	0.361	TX199	Vamont clay, 0 to 1 percent slopes	0.000	0.000	0.018	0.361	0.029	0.361	0.000	0.000	0.000

Appendix K – Soils by Milepost – Gulf Coast Section

Pipeline Segment		County	Beginning Milepost	Ending Milepost	Miles	Soil Series	Soil Series Name	Wind (miles)	water (miles)	Low revegetation potential (miles)	Prime Farmland (miles)	Hydric (miles)	Compaction Prone (miles)	Stony-Rocky (miles)	Shallow Bedrock (miles)	Droughty (miles)
Coast																
Gulf Coast	TX	Hardin	443.795	443.976	0.182	TX199	Evadale-Texla complex, 0 to 1 percent slopes	0.000	0.000	0.173	0.182	0.109	0.182	0.000	0.000	0.000
Gulf Coast	TX	Hardin	443.976	444.226	0.250	TX199	Vamont clay, 0 to 1 percent slopes	0.000	0.000	0.013	0.250	0.020	0.250	0.000	0.000	0.000
Gulf Coast	TX	Hardin	444.226	444.920	0.694	TX199	Evadale-Texla complex, 0 to 1 percent slopes	0.000	0.000	0.659	0.694	0.416	0.694	0.000	0.000	0.000
Gulf Coast	TX	Hardin	444.920	445.143	0.223	TX199	Estes-Angelina complex, 0 to 1 percent slopes, frequently flooded	0.000	0.000	0.000	0.000	0.214	0.223	0.000	0.000	0.000
Gulf Coast	TX	Hardin	445.143	445.425	0.282	TX199	Evadale-Gist complex, 0 to 1 percent slopes	0.000	0.000	0.276	0.282	0.206	0.282	0.000	0.000	0.000
Gulf Coast	TX	Hardin	445.425	445.479	0.055	TX199	Spurger very fine sandy loam, 0 to 2 percent slopes	0.003	0.000	0.003	0.055	0.003	0.052	0.000	0.000	0.049
Gulf Coast	TX	Hardin	445.479	445.559	0.079	TX199	Evadale-Gist complex, 0 to 1 percent slopes	0.000	0.000	0.078	0.079	0.058	0.079	0.000	0.000	0.000
Gulf Coast	TX	Hardin	445.559	445.839	0.281	TX199	Spurger very fine sandy loam, 0 to 2 percent slopes	0.014	0.000	0.014	0.281	0.014	0.266	0.000	0.000	0.252
Gulf Coast	TX	Hardin	445.839	445.881	0.042	TX199	Evadale-Gist complex, 0 to 1 percent slopes	0.000	0.000	0.041	0.042	0.031	0.042	0.000	0.000	0.000
Gulf Coast	TX	Hardin	445.881	445.927	0.046	TX199	Spurger very fine sandy loam, 0 to 2 percent slopes	0.002	0.000	0.002	0.046	0.002	0.044	0.000	0.000	0.041
Gulf Coast	TX	Hardin	445.927	445.964	0.037	TX199	Estes-Angelina complex, 0 to 1 percent slopes, frequently flooded	0.000	0.000	0.000	0.000	0.035	0.037	0.000	0.000	0.000
Gulf Coast	TX	Hardin	445.964	446.259	0.295	TX199	Evadale-Gist complex, 0 to 1 percent slopes	0.000	0.000	0.289	0.295	0.216	0.295	0.000	0.000	0.000
Gulf Coast	TX	Hardin	446.259	446.426	0.167	TX199	Estes-Angelina complex, 0 to 1 percent slopes, frequently flooded	0.000	0.000	0.000	0.000	0.161	0.167	0.000	0.000	0.000
Gulf Coast	TX	Hardin	446.426	446.565	0.139	TX199	Evadale-Gist complex, 0 to 1 percent slopes	0.000	0.000	0.136	0.139	0.101	0.139	0.000	0.000	0.000
Gulf Coast	TX	Hardin	446.565	446.637	0.071	TX199	Estes-Angelina complex, 0 to 1 percent slopes, frequently flooded	0.000	0.000	0.000	0.000	0.068	0.071	0.000	0.000	0.000
Gulf Coast	TX	Hardin	446.637	447.027	0.390	TX199	Evadale-Gist complex, 0 to 1 percent slopes	0.000	0.000	0.382	0.390	0.285	0.390	0.000	0.000	0.000
Gulf Coast	TX	Hardin	447.027	447.266	0.239	TX199	Anahuac-Aris complex, 0 to 1 percent slopes	0.000	0.000	0.000	0.239	0.076	0.239	0.000	0.000	0.000
Gulf Coast	TX	Hardin	447.266	447.345	0.080	TX199	Estes-Angelina complex, 0 to 1 percent slopes, frequently flooded	0.000	0.000	0.000	0.000	0.077	0.080	0.000	0.000	0.000
Gulf Coast	TX	Liberty	447.345	447.570	0.224	TX291	Estes clay, frequently flooded	0.000	0.000	0.179	0.000	0.179	0.179	0.000	0.000	0.000
Gulf Coast	TX	Liberty	447.570	447.942	0.372	TX291	Aldine-Aris complex	0.000	0.000	0.000	0.372	0.093	0.316	0.000	0.000	0.000
Gulf Coast	TX	Jefferson	447.942	449.678	1.736	TX623	Orcadia-Aris complex, 0 to 1 percent slopes	0.000	0.000	0.000	1.736	0.521	1.562	0.000	0.000	0.000
Gulf	TX	Jefferso	449.678	449.830	0.152	TX623	Orcadia silt loam, 0 to 2 percent slopes	0.000	0.000	0.000	0.152	0.000	0.129	0.000	0.000	0.000

Appendix K – Soils by Milepost – Gulf Coast Section

Pipeline Segment		County	Beginning Milepost	Ending Milepost	Miles	Soil Series	Soil Series Name	Wind (miles)	water (miles)	Low revegetation potential (miles)	Prime Farmland (miles)	Hydric (miles)	Compaction Prone (miles)	Stony-Rocky (miles)	Shallow Bedrock (miles)	Droughty (miles)
Coast		n														
Gulf Coast	TX	Jefferson	449.830	449.964	0.134	TX623	Orcadia-Aris complex, 0 to 1 percent slopes	0.000	0.000	0.000	0.134	0.040	0.121	0.000	0.000	0.000
Gulf Coast	TX	Jefferson	449.964	450.091	0.127	TX623	Bevil clay, 0 to 1 percent slopes	0.000	0.000	0.000	0.000	0.108	0.108	0.000	0.000	0.000
Gulf Coast	TX	Jefferson	450.091	450.349	0.259	TX623	Estes clay, 0 to 1 percent slopes, frequently flooded	0.000	0.000	0.000	0.000	0.220	0.220	0.000	0.000	0.000
Gulf Coast	TX	Jefferson	450.349	450.702	0.353	TX623	Bevil clay, 0 to 1 percent slopes	0.000	0.000	0.000	0.000	0.300	0.300	0.000	0.000	0.000
Gulf Coast	TX	Jefferson	450.702	451.297	0.595	TX623	Orcadia-Aris complex, 0 to 1 percent slopes	0.000	0.000	0.000	0.595	0.178	0.535	0.000	0.000	0.000
Gulf Coast	TX	Jefferson	451.297	453.059	1.762	TX623	Bevil clay, 0 to 1 percent slopes	0.000	0.000	0.000	0.000	1.498	1.498	0.000	0.000	0.000
Gulf Coast	TX	Jefferson	453.059	453.883	0.825	TX623	Orcadia-Aris complex, 0 to 1 percent slopes	0.000	0.000	0.000	0.825	0.247	0.742	0.000	0.000	0.000
Gulf Coast	TX	Jefferson	453.883	453.989	0.106	TX623	Estes clay, 0 to 1 percent slopes, frequently flooded	0.000	0.000	0.000	0.000	0.090	0.090	0.000	0.000	0.000
Gulf Coast	TX	Jefferson	453.989	454.294	0.305	TX623	Orcadia-Aris complex, 0 to 1 percent slopes	0.000	0.000	0.000	0.305	0.091	0.274	0.000	0.000	0.000
Gulf Coast	TX	Jefferson	454.294	455.138	0.845	TX623	Labelle-Levac complex, 0 to 1 percent slopes	0.000	0.000	0.000	0.845	0.000	0.760	0.000	0.000	0.000
Gulf Coast	TX	Jefferson	455.138	455.497	0.359	TX623	Bevil clay, 0 to 1 percent slopes	0.000	0.000	0.000	0.000	0.305	0.305	0.000	0.000	0.000
Gulf Coast	TX	Jefferson	455.497	456.407	0.910	TX623	Anahuac-Aris complex, 0 to 1 percent slopes	0.000	0.000	0.000	0.910	0.227	0.773	0.000	0.000	0.000
Gulf Coast	TX	Jefferson	456.407	456.512	0.105	TX623	Leton loam, ponded, 0 to 1 percent slopes	0.000	0.000	0.000	0.000	0.079	0.079	0.000	0.000	0.000
Gulf Coast	TX	Jefferson	456.512	456.887	0.375	TX623	Anahuac-Aris complex, 0 to 1 percent slopes	0.000	0.000	0.000	0.375	0.094	0.319	0.000	0.000	0.000
Gulf Coast	TX	Jefferson	456.887	456.935	0.048	TX623	Labelle silt loam, 0 to 1 percent slopes	0.000	0.000	0.000	0.048	0.000	0.039	0.000	0.000	0.000
Gulf Coast	TX	Jefferson	456.935	456.977	0.042	TX623	Anahuac-Aris complex, 0 to 1 percent slopes	0.000	0.000	0.000	0.042	0.010	0.036	0.000	0.000	0.000
Gulf Coast	TX	Jefferson	456.977	457.681	0.704	TX623	Labelle-Levac complex, 0 to 1 percent slopes	0.000	0.000	0.000	0.704	0.000	0.634	0.000	0.000	0.000
Gulf Coast	TX	Jefferson	457.681	457.709	0.028	TX623	Water	0.000	0.000	0.000	0.000	0.000	0.000	0.000	0.000	0.000
Gulf Coast	TX	Jefferson	457.709	457.960	0.251	TX623	Labelle-Levac complex, 0 to 1 percent slopes	0.000	0.000	0.000	0.251	0.000	0.226	0.000	0.000	0.000
Gulf Coast	TX	Jefferson	457.960	457.997	0.038	TX623	Water	0.000	0.000	0.000	0.000	0.000	0.000	0.000	0.000	0.000
Gulf Coast	TX	Jefferson	457.997	458.173	0.176	TX623	Labelle-Levac complex, 0 to 1 percent slopes	0.000	0.000	0.000	0.176	0.000	0.158	0.000	0.000	0.000
Gulf	TX	Jefferso	458.173	458.596	0.423	TX623	Labelle silt loam, 0 to 1 percent slopes	0.000	0.000	0.000	0.423	0.000	0.338	0.000	0.000	0.000

Appendix K – Soils by Milepost – Gulf Coast Section

Pipeline Segment		County	Beginning Milepost	Ending Milepost	Miles	Soil Series	Soil Series Name	Wind (miles)	water (miles)	Low revegetation potential (miles)	Prime Farmland (miles)	Hydric (miles)	Compaction Prone (miles)	Stony-Rocky (miles)	Shallow Bedrock (miles)	Droughty (miles)
Coast		n														
Gulf Coast	TX	Jefferson	458.596	458.955	0.359	TX623	Beaumont clay, 0 to 1 percent slopes	0.000	0.000	0.000	0.359	0.305	0.305	0.000	0.000	0.000
Gulf Coast	TX	Jefferson	458.955	459.219	0.264	TX623	League clay, 0 to 1 percent slopes	0.000	0.000	0.225	0.264	0.000	0.225	0.000	0.000	0.000
Gulf Coast	TX	Jefferson	459.219	459.929	0.710	TX623	Labelle-Levac complex, 0 to 1 percent slopes	0.000	0.000	0.000	0.710	0.000	0.639	0.000	0.000	0.000
Gulf Coast	TX	Jefferson	459.929	460.378	0.450	TX623	League clay, 0 to 1 percent slopes	0.000	0.000	0.382	0.450	0.000	0.382	0.000	0.000	0.000
Gulf Coast	TX	Jefferson	460.378	460.568	0.190	TX623	Labelle-Levac complex, 0 to 1 percent slopes	0.000	0.000	0.000	0.190	0.000	0.171	0.000	0.000	0.000
Gulf Coast	TX	Jefferson	460.568	460.849	0.281	TX623	Anahuac-Aris complex, 0 to 1 percent slopes	0.000	0.000	0.000	0.281	0.070	0.239	0.000	0.000	0.000
Gulf Coast	TX	Jefferson	460.849	460.905	0.056	TX623	Leton loam, ponded, 0 to 1 percent slopes	0.000	0.000	0.000	0.000	0.042	0.042	0.000	0.000	0.000
Gulf Coast	TX	Jefferson	460.905	461.358	0.453	TX623	Labelle-Levac complex, 0 to 1 percent slopes	0.000	0.000	0.000	0.453	0.000	0.408	0.000	0.000	0.000
Gulf Coast	TX	Jefferson	461.358	461.606	0.248	TX623	Morey-Levac complex, 0 to 1 percent slopes	0.000	0.000	0.000	0.248	0.000	0.211	0.000	0.000	0.000
Gulf Coast	TX	Jefferson	461.606	461.723	0.117	TX623	League clay, 0 to 1 percent slopes	0.000	0.000	0.099	0.117	0.000	0.099	0.000	0.000	0.000
Gulf Coast	TX	Jefferson	461.723	461.759	0.036	TX623	Water	0.000	0.000	0.000	0.000	0.000	0.000	0.000	0.000	0.000
Gulf Coast	TX	Jefferson	461.759	462.402	0.643	TX623	Morey-Levac complex, 0 to 1 percent slopes	0.000	0.000	0.000	0.643	0.000	0.546	0.000	0.000	0.000
Gulf Coast	TX	Jefferson	462.402	462.788	0.387	TX623	League clay, 0 to 1 percent slopes	0.000	0.000	0.329	0.387	0.000	0.329	0.000	0.000	0.000
Gulf Coast	TX	Jefferson	462.788	463.157	0.368	TX623	Morey-Levac complex, 0 to 1 percent slopes	0.000	0.000	0.000	0.368	0.000	0.313	0.000	0.000	0.000
Gulf Coast	TX	Jefferson	463.157	463.893	0.736	TX623	League clay, 0 to 1 percent slopes	0.000	0.000	0.626	0.736	0.000	0.626	0.000	0.000	0.000
Gulf Coast	TX	Jefferson	463.893	464.793	0.900	TX623	Beaumont clay, 0 to 1 percent slopes	0.000	0.000	0.000	0.900	0.765	0.765	0.000	0.000	0.000
Gulf Coast	TX	Jefferson	464.793	465.123	0.330	TX623	Labelle-Levac complex, 0 to 1 percent slopes	0.000	0.000	0.000	0.330	0.000	0.297	0.000	0.000	0.000
Gulf Coast	TX	Jefferson	465.123	465.185	0.062	TX623	Beaumont clay, 0 to 1 percent slopes	0.000	0.000	0.000	0.062	0.053	0.053	0.000	0.000	0.000
Gulf Coast	TX	Jefferson	465.185	465.282	0.097	TX623	China clay, 0 to 1 percent slopes	0.000	0.000	0.082	0.097	0.000	0.082	0.000	0.000	0.000
Gulf Coast	TX	Jefferson	465.282	465.458	0.176	TX623	Beaumont clay, 0 to 1 percent slopes	0.000	0.000	0.000	0.176	0.150	0.150	0.000	0.000	0.000
Gulf Coast	TX	Jefferson	465.458	466.578	1.120	TX623	China clay, 0 to 1 percent slopes	0.000	0.000	0.952	1.120	0.000	0.952	0.000	0.000	0.000
Gulf	TX	Jefferso	466.578	466.999	0.421	TX623	Beaumont clay, 0 to 1 percent slopes	0.000	0.000	0.000	0.421	0.358	0.358	0.000	0.000	0.000

Appendix K – Soils by Milepost – Gulf Coast Section

Pipeline Segment		County	Beginning Milepost	Ending Milepost	Miles	Soil Series	Soil Series Name	Wind (miles)	water (miles)	Low revegetation potential (miles)	Prime Farmland (miles)	Hydric (miles)	Compaction Prone (miles)	Stony-Rocky (miles)	Shallow Bedrock (miles)	Droughty (miles)
Coast		n														
Gulf Coast	TX	Jefferson	466.999	467.426	0.427	TX623	League clay, 0 to 1 percent slopes	0.000	0.000	0.363	0.427	0.000	0.363	0.000	0.000	0.000
Gulf Coast	TX	Jefferson	467.426	469.174	1.747	TX623	Beaumont clay, 0 to 1 percent slopes	0.000	0.000	0.000	1.747	1.485	1.485	0.000	0.000	0.000
Gulf Coast	TX	Jefferson	469.174	469.276	0.102	TX623	Estes clay, 0 to 1 percent slopes, frequently flooded	0.000	0.000	0.000	0.000	0.087	0.087	0.000	0.000	0.000
Gulf Coast	TX	Jefferson	469.276	469.310	0.034	TX623	Water	0.000	0.000	0.000	0.000	0.000	0.000	0.000	0.000	0.000
Gulf Coast	TX	Jefferson	469.310	469.428	0.118	TX623	Estes clay, 0 to 1 percent slopes, frequently flooded	0.000	0.000	0.000	0.000	0.100	0.100	0.000	0.000	0.000
Gulf Coast	TX	Jefferson	469.428	469.568	0.140	TX623	Beaumont clay, 0 to 1 percent slopes	0.000	0.000	0.000	0.140	0.119	0.119	0.000	0.000	0.000
Gulf Coast	TX	Jefferson	469.568	469.706	0.138	TX623	League clay, 0 to 1 percent slopes	0.000	0.000	0.117	0.138	0.000	0.117	0.000	0.000	0.000
Gulf Coast	TX	Jefferson	469.706	470.668	0.962	TX623	Beaumont clay, 0 to 1 percent slopes	0.000	0.000	0.000	0.962	0.818	0.818	0.000	0.000	0.000
Gulf Coast	TX	Jefferson	470.668	472.592	1.924	TX623	League clay, 0 to 1 percent slopes	0.000	0.000	1.636	1.924	0.000	1.636	0.000	0.000	0.000
Gulf Coast	TX	Jefferson	472.592	472.763	0.171	TX623	Morey-Levac complex, 0 to 1 percent slopes	0.000	0.000	0.000	0.171	0.000	0.145	0.000	0.000	0.000
Gulf Coast	TX	Jefferson	472.763	473.094	0.331	TX623	Anahuac very fine sandy loam, 0 to 2 percent slopes	0.000	0.000	0.000	0.281	0.000	0.281	0.000	0.000	0.000
Gulf Coast	TX	Jefferson	473.094	473.512	0.418	TX623	Anahuac-Aris complex, 0 to 1 percent slopes	0.000	0.000	0.000	0.418	0.104	0.355	0.000	0.000	0.000
Gulf Coast	TX	Jefferson	473.512	473.563	0.051	TX623	Leton loam, ponded, 0 to 1 percent slopes	0.000	0.000	0.000	0.000	0.038	0.038	0.000	0.000	0.000
Gulf Coast	TX	Jefferson	473.563	473.634	0.071	TX623	Viterbo silty clay loam, 0 to 1 percent slopes	0.000	0.000	0.000	0.000	0.060	0.060	0.000	0.000	0.000
Gulf Coast	TX	Jefferson	473.634	473.799	0.166	TX623	Anahuac-Aris complex, 0 to 1 percent slopes	0.000	0.000	0.000	0.166	0.041	0.141	0.000	0.000	0.000
Gulf Coast	TX	Jefferson	473.799	474.298	0.499	TX623	Viterbo silty clay loam, 0 to 1 percent slopes	0.000	0.000	0.000	0.000	0.424	0.424	0.000	0.000	0.000
Gulf Coast	TX	Jefferson	474.298	475.394	1.096	TX623	League clay, 0 to 1 percent slopes	0.000	0.000	0.931	1.096	0.000	0.931	0.000	0.000	0.000
Gulf Coast	TX	Jefferson	475.394	475.630	0.236	TX623	Beaumont clay, 0 to 1 percent slopes	0.000	0.000	0.000	0.236	0.201	0.201	0.000	0.000	0.000
Gulf Coast	TX	Jefferson	475.630	476.328	0.698	TX623	League clay, 0 to 1 percent slopes	0.000	0.000	0.594	0.698	0.000	0.594	0.000	0.000	0.000
Gulf Coast	TX	Jefferson	476.328	476.346	0.018	TX623	Water	0.000	0.000	0.000	0.000	0.000	0.000	0.000	0.000	0.000
Gulf Coast	TX	Jefferson	476.346	476.471	0.125	TX623	League-Urban land complex, 0 to 1 percent slopes	0.000	0.000	0.088	0.000	0.000	0.088	0.000	0.000	0.000
Gulf	TX	Jefferso	476.471	476.899	0.428	TX623	Labelle-Urban land complex, 0 to 1 percent slopes	0.000	0.000	0.000	0.000	0.000	0.300	0.000	0.000	0.000

Appendix K – Soils by Milepost – Gulf Coast Section

Pipeline Segment		County	Beginning Milepost	Ending Milepost	Miles	Soil Series	Soil Series Name	Wind (miles)	water (miles)	Low revegetation potential (miles)	Prime Farmland (miles)	Hydric (miles)	Compaction Prone (miles)	Stony-Rocky (miles)	Shallow Bedrock (miles)	Droughty (miles)
Coast		n														
Gulf Coast	TX	Jefferson	476.899	476.948	0.048	TX623	Orcadia silt loam, 0 to 2 percent slopes	0.000	0.000	0.000	0.048	0.000	0.041	0.000	0.000	0.000
Gulf Coast	TX	Jefferson	476.948	477.078	0.130	TX623	Creole mucky peat, 0 to 1 percent slopes, frequently flooded, tidal	0.000	0.000	0.104	0.000	0.104	0.104	0.000	0.000	0.000
Gulf Coast	TX	Jefferson	477.078	477.427	0.349	TX623	Orcadia silt loam, 0 to 2 percent slopes	0.000	0.000	0.000	0.349	0.000	0.296	0.000	0.000	0.000
Gulf Coast	TX	Jefferson	477.427	477.525	0.098	TX623	Labelle-Urban land complex, 0 to 1 percent slopes	0.000	0.000	0.000	0.000	0.000	0.069	0.000	0.000	0.000
Gulf Coast	TX	Jefferson	477.525	477.776	0.251	TX623	Orcadia silt loam, 0 to 2 percent slopes	0.000	0.000	0.000	0.251	0.000	0.214	0.000	0.000	0.000
Gulf Coast	TX	Jefferson	477.776	478.205	0.429	TX623	Creole mucky peat, 0 to 1 percent slopes, frequently flooded, tidal	0.000	0.000	0.343	0.000	0.343	0.343	0.000	0.000	0.000

Appendix K – Soils by Mile Post – Houston Lateral

Pipeline Segment	State	County	Beginning Milepost	Ending Milepost	Miles	Soil Series	Soil Series Name	Wind (miles)	water (miles)	Low revegetation potential (miles)	Prime Farmland (miles)	Hydric (miles)	Compaction Prone (miles)	Stony-Rocky (miles)	Shallow Bedrock (miles)	Droughty (miles)
Houston Lateral	TX	Liberty	0.000	0.168	0.168	TX291	Kemah-Aris complex	0.000	0.000	0.000	0.000	0.067	0.159	0.000	0.000	0.000
Houston Lateral	TX	Liberty	0.168	0.314	0.147	TX291	Aris silt loam	0.000	0.000	0.000	0.000	0.125	0.125	0.000	0.000	0.000
Houston Lateral	TX	Liberty	0.314	1.722	1.407	TX291	Kemah-Aris complex	0.000	0.000	0.000	0.000	0.563	1.337	0.000	0.000	0.000
Houston Lateral	TX	Liberty	1.722	2.656	0.935	TX291	Aldine silt loam, 0 to 2 percent slopes	0.000	0.000	0.000	0.935	0.000	0.748	0.000	0.000	0.000
Houston Lateral	TX	Liberty	2.656	4.239	1.583	TX291	Aldine-Aris complex	0.000	0.000	0.000	1.583	0.396	1.345	0.000	0.000	0.000
Houston Lateral	TX	Liberty	4.239	4.850	0.611	TX291	Bevil silty clay, depressional	0.000	0.000	0.000	0.611	0.550	0.550	0.000	0.000	0.000
Houston Lateral	TX	Liberty	4.850	5.250	0.400	TX291	Beaumont clay	0.000	0.000	0.000	0.400	0.360	0.360	0.000	0.000	0.000
Houston Lateral	TX	Liberty	5.250	5.495	0.245	TX291	Bevil silty clay, depressional	0.000	0.000	0.000	0.245	0.221	0.221	0.000	0.000	0.000
Houston Lateral	TX	Liberty	5.495	6.281	0.786	TX291	Beaumont clay	0.000	0.000	0.000	0.786	0.707	0.707	0.000	0.000	0.000
Houston Lateral	TX	Liberty	6.281	7.281	1.000	TX291	Verland clay loam	0.000	0.000	0.000	0.000	0.950	0.950	0.000	0.000	0.000
Houston Lateral	TX	Liberty	7.281	7.545	0.264	TX291	Beaumont clay, depressional	0.000	0.000	0.000	0.000	0.251	0.251	0.000	0.000	0.000
Houston Lateral	TX	Liberty	7.545	8.482	0.937	TX291	Beaumont clay	0.000	0.000	0.000	0.937	0.843	0.843	0.000	0.000	0.000
Houston Lateral	TX	Liberty	8.482	8.887	0.405	TX291	Kemah-Aris complex	0.000	0.000	0.000	0.000	0.162	0.384	0.000	0.000	0.000
Houston Lateral	TX	Liberty	8.887	9.146	0.259	TX291	Anahuac-Aris complex	0.000	0.000	0.000	0.259	0.091	0.220	0.000	0.000	0.000
Houston Lateral	TX	Liberty	9.146	9.448	0.302	TX291	Kemah-Aris complex	0.000	0.000	0.000	0.000	0.121	0.287	0.000	0.000	0.000
Houston Lateral	TX	Liberty	9.448	10.136	0.688	TX291	Bevil silty clay, depressional	0.000	0.000	0.000	0.688	0.619	0.619	0.000	0.000	0.000
Houston Lateral	TX	Liberty	10.136	10.149	0.013	TX291	Anahuac-Aris complex	0.000	0.000	0.000	0.013	0.004	0.011	0.000	0.000	0.000
Houston Lateral	TX	Liberty	10.149	10.162	0.014	TX291	Aris silt loam	0.000	0.000	0.000	0.000	0.012	0.012	0.000	0.000	0.000
Houston Lateral	TX	Liberty	10.162	10.339	0.177	TX291	Anahuac-Aris complex	0.000	0.000	0.000	0.177	0.062	0.151	0.000	0.000	0.000
Houston Lateral	TX	Liberty	10.339	10.811	0.472	TX291	Aris silt loam	0.000	0.000	0.000	0.000	0.401	0.401	0.000	0.000	0.000
Houston Lateral	TX	Liberty	10.811	10.917	0.106	TX291	Anahuac-Aris complex	0.000	0.000	0.000	0.106	0.037	0.090	0.000	0.000	0.000

Pipeline Segment	State	County	Beginning Milepost	Ending Milepost	Miles	Soil Series	Soil Series Name	Wind (miles)	water (miles)	Low revegetation potential (miles)	Prime Farmland (miles)	Hydric (miles)	Compaction Prone (miles)	Stony-Rocky (miles)	Shallow Bedrock (miles)	Droughty (miles)
Houston Lateral	TX	Liberty	10.917	10.969	0.052	TX291	Aris silt loam	0.000	0.000	0.000	0.000	0.044	0.044	0.000	0.000	0.000
Houston Lateral	TX	Liberty	10.969	11.315	0.345	TX291	Anahuac-Aris complex	0.000	0.000	0.000	0.345	0.121	0.294	0.000	0.000	0.000
Houston Lateral	TX	Liberty	11.315	11.564	0.249	TX291	Aris silt loam	0.000	0.000	0.000	0.000	0.212	0.212	0.000	0.000	0.000
Houston Lateral	TX	Liberty	11.564	11.794	0.231	TX291	Aldine-Aris complex	0.000	0.000	0.000	0.231	0.058	0.196	0.000	0.000	0.000
Houston Lateral	TX	Liberty	11.794	11.797	0.002	TX291	Anahuac-Aris complex	0.000	0.000	0.000	0.002	0.001	0.002	0.000	0.000	0.000
Houston Lateral	TX	Liberty	11.797	11.809	0.012	TX291	Aldine-Aris complex	0.000	0.000	0.000	0.012	0.003	0.010	0.000	0.000	0.000
Houston Lateral	TX	Liberty	11.809	12.568	0.759	TX291	Anahuac-Aris complex	0.000	0.000	0.000	0.759	0.266	0.645	0.000	0.000	0.000
Houston Lateral	TX	Liberty	12.568	12.655	0.087	TX291	Mocarey-Yeaton complex	0.000	0.000	0.000	0.087	0.000	0.069	0.000	0.000	0.000
Houston Lateral	TX	Liberty	12.655	12.813	0.158	TX291	Bernard-Morey complex	0.000	0.000	0.000	0.158	0.000	0.126	0.000	0.000	0.000
Houston Lateral	TX	Liberty	12.813	13.212	0.399	TX291	Beaumont clay	0.000	0.000	0.000	0.399	0.359	0.359	0.000	0.000	0.000
Houston Lateral	TX	Liberty	13.212	13.814	0.602	TX291	Bernard-Morey complex	0.000	0.000	0.000	0.602	0.000	0.482	0.000	0.000	0.000
Houston Lateral	TX	Liberty	13.814	13.854	0.040	TX291	Anahuac-Aris complex	0.000	0.000	0.000	0.040	0.014	0.034	0.000	0.000	0.000
Houston Lateral	TX	Liberty	13.854	13.904	0.050	TX291	Bernard-Morey complex	0.000	0.000	0.000	0.050	0.000	0.040	0.000	0.000	0.000
Houston Lateral	TX	Liberty	13.904	14.870	0.965	TX291	Anahuac-Aris complex	0.000	0.000	0.000	0.965	0.338	0.821	0.000	0.000	0.000
Houston Lateral	TX	Liberty	14.870	15.277	0.408	TX291	Kemah-Aris complex	0.000	0.000	0.000	0.000	0.163	0.387	0.000	0.000	0.000
Houston Lateral	TX	Liberty	15.277	15.716	0.439	TX291	Kemah silt loam	0.000	0.000	0.000	0.000	0.000	0.373	0.000	0.000	0.000
Houston Lateral	TX	Liberty	15.716	17.125	1.409	TX291	Kaman clay, occasionally flooded	0.000	0.000	1.268	1.409	0.000	1.268	0.000	0.000	0.000
Houston Lateral	TX	Liberty	17.125	17.399	0.274	TX291	Fausse clay, frequently flooded	0.000	0.000	0.000	0.000	0.247	0.247	0.000	0.000	0.000
Houston Lateral	TX	Liberty	17.399	17.568	0.169	TX291	Bienville loamy fine sand, 0 to 2 percent slopes	0.135	0.000	0.000	0.000	0.000	0.000	0.000	0.000	0.135
Houston Lateral	TX	Liberty	17.568	17.958	0.390	TX291	Bienville-Kenefick complex, 1 to 3 percent slopes	0.156	0.000	0.000	0.000	0.000	0.137	0.000	0.000	0.156
Houston Lateral	TX	Liberty	17.958	18.374	0.416	TX291	Spurger-Waller complex, 0 to 2 percent slopes	0.000	0.000	0.000	0.416	0.125	0.374	0.000	0.000	0.000
Houston Lateral	TX	Liberty	18.374	18.406	0.032	TX291	Kaman clay, occasionally flooded	0.000	0.000	0.028	0.032	0.000	0.028	0.000	0.000	0.000

Pipeline Segment	State	County	Beginning Milepost	Ending Milepost	Miles	Soil Series	Soil Series Name	Wind (miles)	water (miles)	Low revegetation potential (miles)	Prime Farmland (miles)	Hydric (miles)	Compaction Prone (miles)	Stony-Rocky (miles)	Shallow Bedrock (miles)	Droughty (miles)
Houston Lateral	TX	Liberty	18.406	18.833	0.427	TX291	Fausse clay, frequently flooded	0.000	0.000	0.000	0.000	0.384	0.384	0.000	0.000	0.000
Houston Lateral	TX	Liberty	18.833	21.110	2.277	TX291	Kaman clay, frequently flooded	0.000	0.000	2.050	0.000	2.050	2.050	0.000	0.000	0.000
Houston Lateral	TX	Liberty	21.110	21.817	0.707	TX291	Mantachie loam, frequently flooded	0.000	0.000	0.000	0.000	0.565	0.565	0.000	0.000	0.000
Houston Lateral	TX	Liberty	21.817	21.876	0.059	TX291	Water	0.000	0.000	0.000	0.000	0.000	0.000	0.000	0.000	0.000
Houston Lateral	TX	Liberty	21.876	21.902	0.026	TX291	Woodville fine sandy loam, 5 to 8 percent slopes	0.000	0.000	0.000	0.000	0.000	0.023	0.000	0.000	0.000
Houston Lateral	TX	Liberty	21.902	22.001	0.099	TX291	Aldine-Aris complex	0.000	0.000	0.000	0.099	0.025	0.084	0.000	0.000	0.000
Houston Lateral	TX	Liberty	22.001	22.393	0.392	TX291	Beaumont clay	0.000	0.000	0.000	0.392	0.353	0.353	0.000	0.000	0.000
Houston Lateral	TX	Liberty	22.393	22.592	0.200	TX291	Voss fine sand, occasionally flooded	0.170	0.000	0.000	0.000	0.000	0.000	0.000	0.000	0.170
Houston Lateral	TX	Liberty	22.592	22.892	0.300	TX291	Aldine-Aris complex	0.000	0.000	0.000	0.300	0.075	0.255	0.000	0.000	0.000
Houston Lateral	TX	Liberty	22.892	23.364	0.472	TX291	Beaumont clay	0.000	0.000	0.000	0.472	0.425	0.425	0.000	0.000	0.000
Houston Lateral	TX	Liberty	23.364	26.428	3.064	TX291	Bernard-Morey complex	0.000	0.000	0.000	3.064	0.000	2.451	0.000	0.000	0.000
Houston Lateral	TX	Liberty	26.428	27.428	1.000	TX291	Beaumont clay	0.000	0.000	0.000	1.000	0.900	0.900	0.000	0.000	0.000
Houston Lateral	TX	Liberty	27.428	28.583	1.154	TX291	League clay, 0 to 1 percent slopes	0.000	0.000	1.039	1.154	0.000	1.039	0.000	0.000	0.000
Houston Lateral	TX	Liberty	28.583	28.764	0.182	TX291	Water	0.000	0.000	0.000	0.000	0.000	0.000	0.000	0.000	0.000
Houston Lateral	TX	Liberty	28.764	29.123	0.359	TX291	League clay, 0 to 1 percent slopes	0.000	0.000	0.323	0.359	0.000	0.323	0.000	0.000	0.000
Houston Lateral	TX	Liberty	29.123	29.596	0.474	TX291	Mocarey-Yeaton complex	0.000	0.000	0.000	0.474	0.000	0.379	0.000	0.000	0.000
Houston Lateral	TX	Liberty	29.596	30.695	1.099	TX291	Beaumont clay	0.000	0.000	0.000	1.099	0.989	0.989	0.000	0.000	0.000
Houston Lateral	TX	Liberty	30.695	30.987	0.292	TX291	Mocarey-Yeaton complex	0.000	0.000	0.000	0.292	0.000	0.233	0.000	0.000	0.000
Houston Lateral	TX	Liberty	30.987	31.276	0.289	TX291	Bernard-Morey complex	0.000	0.000	0.000	0.289	0.000	0.231	0.000	0.000	0.000
Houston Lateral	TX	Chambers	31.276	32.193	0.917	TX071	Morey silt loam, levelled	0.000	0.000	0.000	0.917	0.092	0.871	0.000	0.000	0.000
Houston Lateral	TX	Chambers	32.193	33.593	1.400	TX071	Lake Charles clay, 0 to 1 percent slopes	0.000	0.000	0.000	1.400	0.140	1.330	0.000	0.000	0.000
Houston Lateral	TX	Chambers	33.593	34.963	1.370	TX071	Beaumont clay	0.000	0.000	0.000	1.370	1.302	1.302	0.000	0.000	0.000

Pipeline Segment	State	County	Beginning Milepost	Ending Milepost	Miles	Soil Series	Soil Series Name	Wind (miles)	water (miles)	Low revegetation potential (miles)	Prime Farmland (miles)	Hydric (miles)	Compaction Prone (miles)	Stony-Rocky (miles)	Shallow Bedrock (miles)	Droughty (miles)
Houston Lateral	TX	Chambers	34.963	35.004	0.041	TX071	Lake Charles clay, 0 to 1 percent slopes	0.000	0.000	0.000	0.041	0.004	0.039	0.000	0.000	0.000
Houston Lateral	TX	Harris	35.004	37.453	2.449	TX201	Lake Charles clay, 0 to 1 percent slopes	0.000	0.000	0.000	2.449	0.000	2.204	0.000	0.000	0.000
Houston Lateral	TX	Harris	37.453	37.632	0.180	TX201	Addicks loam	0.000	0.000	0.000	0.000	0.162	0.162	0.000	0.000	0.000
Houston Lateral	TX	Harris	37.632	37.725	0.093	TX201	Bernard clay loam	0.000	0.000	0.000	0.093	0.000	0.083	0.000	0.000	0.000
Houston Lateral	TX	Harris	37.725	38.172	0.447	TX201	Addicks loam	0.000	0.000	0.000	0.000	0.402	0.402	0.000	0.000	0.000
Houston Lateral	TX	Harris	38.172	38.238	0.066	TX201	Bernard clay loam	0.000	0.000	0.000	0.066	0.000	0.059	0.000	0.000	0.000
Houston Lateral	TX	Harris	38.238	39.554	1.316	TX201	Addicks loam	0.000	0.000	0.000	0.000	1.185	1.185	0.000	0.000	0.000
Houston Lateral	TX	Harris	39.554	39.816	0.262	TX201	Bernard-Edna complex	0.000	0.000	0.000	0.262	0.000	0.223	0.000	0.000	0.000
Houston Lateral	TX	Harris	39.816	40.043	0.227	TX201	Verland silty clay loam	0.000	0.000	0.000	0.227	0.000	0.193	0.000	0.000	0.000
Houston Lateral	TX	Harris	40.043	40.633	0.590	TX201	Bernard-Edna complex	0.000	0.000	0.000	0.590	0.000	0.502	0.000	0.000	0.000
Houston Lateral	TX	Harris	40.633	40.800	0.167	TX201	Verland silty clay loam	0.000	0.000	0.000	0.167	0.000	0.142	0.000	0.000	0.000
Houston Lateral	TX	Harris	40.800	40.983	0.182	TX201	Aldine very fine sandy loam	0.000	0.000	0.000	0.000	0.000	0.164	0.000	0.000	0.000
Houston Lateral	TX	Harris	40.983	41.053	0.071	TX201	Atasco fine sandy loam, 1 to 4 percent slopes	0.000	0.000	0.000	0.000	0.000	0.063	0.000	0.000	0.000
Houston Lateral	TX	Harris	41.053	41.346	0.293	TX201	Lake Charles clay, 0 to 1 percent slopes	0.000	0.000	0.000	0.293	0.000	0.264	0.000	0.000	0.000
Houston Lateral	TX	Harris	41.346	41.793	0.447	TX201	Atasco fine sandy loam, 1 to 4 percent slopes	0.000	0.000	0.000	0.000	0.000	0.402	0.000	0.000	0.000
Houston Lateral	TX	Harris	41.793	41.875	0.082	TX201	Hatliff loam	0.000	0.000	0.000	0.000	0.000	0.000	0.000	0.000	0.077
Houston Lateral	TX	Harris	41.875	41.942	0.067	TX201	Nahatche loam	0.000	0.000	0.000	0.000	0.064	0.064	0.000	0.000	0.000
Houston Lateral	TX	Harris	41.942	42.234	0.292	TX201	Hatliff loam	0.000	0.000	0.000	0.000	0.000	0.000	0.000	0.000	0.278
Houston Lateral	TX	Harris	42.234	42.297	0.063	TX201	Kaman clay	0.000	0.000	0.060	0.000	0.060	0.060	0.000	0.000	0.000
Houston Lateral	TX	Harris	42.297	42.532	0.235	TX201	Hatliff loam	0.000	0.000	0.000	0.000	0.000	0.000	0.000	0.000	0.223
Houston Lateral	TX	Harris	42.532	42.602	0.070	TX201	Voss sand	0.063	0.000	0.000	0.000	0.063	0.000	0.000	0.000	0.063
Houston Lateral	TX	Harris	42.602	42.736	0.134	TX201	Kaman clay	0.000	0.000	0.128	0.000	0.128	0.128	0.000	0.000	0.000

Pipeline Segment	State	County	Beginning Milepost	Ending Milepost	Miles	Soil Series	Soil Series Name	Wind (miles)	water (miles)	Low revegetation potential (miles)	Prime Farmland (miles)	Hydric (miles)	Compaction Prone (miles)	Stony-Rocky (miles)	Shallow Bedrock (miles)	Droughty (miles)
Houston Lateral	TX	Harris	42.736	42.984	0.248	TX201	Voss sand	0.223	0.000	0.000	0.000	0.223	0.000	0.000	0.000	0.223
Houston Lateral	TX	Harris	42.984	43.215	0.231	TX201	Kaman clay	0.000	0.000	0.219	0.000	0.219	0.219	0.000	0.000	0.000
Houston Lateral	TX	Harris	43.215	43.288	0.074	TX201	Voss sand	0.066	0.000	0.000	0.000	0.066	0.000	0.000	0.000	0.066
Houston Lateral	TX	Harris	43.288	43.342	0.054	TX201	Water	0.000	0.000	0.000	0.000	0.000	0.000	0.000	0.000	0.000
Houston Lateral	TX	Harris	43.342	43.391	0.048	TX201	Kaman clay	0.000	0.000	0.046	0.000	0.046	0.046	0.000	0.000	0.000
Houston Lateral	TX	Harris	43.391	43.544	0.153	TX201	Atasco fine sandy loam, 1 to 4 percent slopes	0.000	0.000	0.000	0.000	0.000	0.138	0.000	0.000	0.000
Houston Lateral	TX	Harris	43.544	44.110	0.566	TX201	Aldine very fine sandy loam	0.000	0.000	0.000	0.000	0.000	0.509	0.000	0.000	0.000
Houston Lateral	TX	Harris	44.110	44.614	0.504	TX201	Bernard clay loam	0.000	0.000	0.000	0.504	0.000	0.454	0.000	0.000	0.000
Houston Lateral	TX	Harris	44.614	44.724	0.110	TX201	Bernard-Urban land complex	0.000	0.000	0.000	0.000	0.000	0.060	0.000	0.000	0.000
Houston Lateral	TX	Harris	44.724	44.827	0.103	TX201	Bernard clay loam	0.000	0.000	0.000	0.103	0.000	0.093	0.000	0.000	0.000
Houston Lateral	TX	Harris	44.827	45.034	0.206	TX201	Addicks loam	0.000	0.000	0.000	0.000	0.186	0.186	0.000	0.000	0.000
Houston Lateral	TX	Harris	45.034	45.167	0.133	TX201	Bernard clay loam	0.000	0.000	0.000	0.133	0.000	0.120	0.000	0.000	0.000
Houston Lateral	TX	Harris	45.167	45.498	0.331	TX201	Addicks loam	0.000	0.000	0.000	0.000	0.298	0.298	0.000	0.000	0.000
Houston Lateral	TX	Harris	45.498	45.762	0.264	TX201	Bernard clay loam	0.000	0.000	0.000	0.264	0.000	0.238	0.000	0.000	0.000
Houston Lateral	TX	Harris	45.762	46.484	0.723	TX201	Addicks loam	0.000	0.000	0.000	0.000	0.650	0.650	0.000	0.000	0.000
Houston Lateral	TX	Harris	46.484	46.768	0.284	TX201	Bernard-Edna complex	0.000	0.000	0.000	0.284	0.000	0.241	0.000	0.000	0.000
Houston Lateral	TX	Harris	46.768	46.922	0.154	TX201	Lake Charles clay, 0 to 1 percent slopes	0.000	0.000	0.000	0.154	0.000	0.138	0.000	0.000	0.000
Houston Lateral	TX	Harris	46.922	47.205	0.283	TX201	Bernard-Edna complex	0.000	0.000	0.000	0.283	0.000	0.241	0.000	0.000	0.000

Appendix L Impaired Waterbodies

Waterbody Name	Designated Use	Use Support/ Attainment	Impairment	TMDL Priority
Montana- Steele City Segment				
Frenchman Creek	Aquatic Life	Partial Support	Alteration in stream-side or littoral vegetative covers; Chlorophyll-a; Low flow alterations	TMDL's not started 2009-2012
	Fisheries (Non-Salmonid)	Partial Support		
	Agriculture	Partial Support	Low flow alterations	
	Industry	Partial Support		
	Drinking Water (Human Health)	Full Support		
	Recreation	Partial Support	Low flow alterations	
Buggy Creek	Aquatic Life	Partial Support	Iron	TMDL's not started 2009-2012
	Fisheries (Non-Salmonid)	Partial Support		
	Agriculture	Full Support		
	Industry	Full Support		
	Drinking Water (Human Health)	Full Support		
	Recreation	Full Support		
Cherry Creek	Aquatic Life	Partial Support	Iron	TMDL's not started 2009-2012
	Fisheries (Non-Salmonid)	Partial Support		
	Agriculture	Full Support		
	Industry	Full Support		
	Drinking Water (Human Health)	Full Support		
	Recreation	Full Support		
Milk River	Aquatic Life	Not Assessed		TMDL's

Waterbody Name	Designated Use	Use Support/ Attainment	Impairment	TMDL Priority
	Fisheries (Non-Salmonid)	Not Assessed		not started 2009-2012
	Agriculture	Partial Support	Fecal Coliform	
	Industry	Partial Support		
	Drinking Water (Human Health)	Not Supported	Lead; Mercury	
	Recreation	Threatened	Fecal Coliform	
Missouri River	Aquatic Life	Partial Support	Alteration in stream-side or littoral vegetative cover; Other flow regime alterations; Temperature, water	TMDL's not started 2009-2012
	Fisheries (Salmonid)	Partial Support		
	Agriculture	Full Support		
	Industry	Full Support		
	Drinking Water (Human Health)	Full Support		
	Recreation	Full Support		
Middle Fork Prairie Elk Creek	Aquatic Life	Partial Support	Alteration in stream-side or littoral vegetative cover; Phosphorus (Total); Physical substreate habitat atleratios; Total Kjehidahl Nitrogen (TKN)	TMDL's not started 2009-2012
	Fisheries (Non-Salmonid)	Partial Support		
	Recreation	Not Assessed		
	Agriculture	Not Assessed		
	Industry	Not Assessed		
	Drinking Water (Human Health)	Not Assessed		
East Fork Prairie Elk Creek	Aquatic Life	Partial Support	Alteration in stream-side or littoral vegetative cover; Phosphorus (Total); Physical substreate habitat atleratios; TKN	TMDL's not started 2009-2012

Waterbody Name	Designated Use	Use Support/ Attainment	Impairment	TMDL Priority
	Fisheries (Non-Salmonid)	Partial Support		
	Recreation	Not Assessed		
	Agriculture	Not Assessed		
	Industry	Not Assessed		
	Drinking Water (Human Health)	Not Assessed		
Yellowstone River	Aquatic Life	Not Assessed		TMDL not required
	Fisheries (Non-Salmonid)	Partial Support	Fish-Passage Barrier	
	Agriculture	Full Support		
	Industry	Full Support		
	Drinking Water (Human Health)	Not Assessed		
	Recreation	Not Assessed		
Yellowstone River	Aquatic Life	Not Assessed		TMDL not required
	Fisheries (Non-Salmonid)	Partial Support	Fish-Passage Barrier	
	Agriculture	Full Support		
	Industry	Full Support		
	Drinking Water (Human Health)	Not Assessed		
	Recreation	Not Assessed		
Cabin Creek	Aquatic Life	Not Supported	Oxygen, Dissolved; Sedimentation/ Siltation; TKN	TMDL's not started 2009-2012
	Fisheries (Non-Salmonid)	Not Supported		
	Recreation	Full Support		
	Agriculture	Not Assessed		
	Industry	Not Assessed		

Waterbody Name	Designated Use	Use Support/ Attainment	Impairment	TMDL Priority
	Drinking Water (Human Health)	Not Assessed		
Cabin Creek	Aquatic Life	Not Supported	Oxygen, Dissolved; Sedimentation/ Siltation; TKN	TMDL's not started 2009-2012
	Fisheries (Non-Salmonid)			
	Recreation			
	Agriculture	Not Assessed		
	Industry	Not Assessed		
	Drinking Water (Human Health)	Not Assessed		
Pennel Creek	Aquatic Life	Partial Support	Total Dissolved Solids	TMDL's not started 2009-2012
	Fisheries (Non-Salmonid)	Partial Support		
	Recreation	Full Support		
	Agriculture	Not Assessed		
	Industry	Not Assessed		
	Drinking Water (Human Health)	Not Assessed		
Sandstone Creek	Aquatic Life	Partial Support	Nitrate/Nitrite (Nitrite + Nitrate as N); TKN	TMDL's not started 2009-2012
	Fisheries (Non-Salmonid)	Partial Support		
	Recreation	Full Support		
	Agriculture	Not Assessed		
	Industry	Not Assessed		
	Drinking Water (Human Health)	Not Assessed		
South Dakota – Steele City Segment				
South Fork Grand River	Warmwater semipermanent fish life propagation	Nonsupport	Total Suspended Solids	

Waterbody Name	Designated Use	Use Support/ Attainment	Impairment	TMDL Priority
	Limited-contact recreation	Full Support		
	Fish/Wildlife Prop, Rec, Stock	Full Support		
	Irrigation	Nonsupport	Salinity	
South Fork Moreau River	Warmwater marginal fish life propagation	Full Support		
	Limited-contact recreation	Full Support		
	Fish/Wildlife Prop, Rec, Stock	Full Support		
	Irrigation	Nonsupport	Specific Conductance	
Cheyenne River	Warmwater permanent fish life propagation	Nonsupport	Total Suspended Solids	
	Immersion recreation	Nonsupport	Fecal Coliform	
	Limited-contact recreation	Full Support		
	Fish/Wildlife Prop, Rec, Stock	Full Support		
	Irrigation	Full Support		
White River	Warmwater semipermanent fish life propagation	Nonsupport	Total Suspended Solids	
	Limited-contact recreation	Nonsupport	Fecal Coliform	
	Fish/Wildlife Prop, Rec, Stock	Full Support		
	Irrigation	Full Support		
Ponca Creek	Warmwater semipermanent fish life propagation	Nonsupport	Total Suspended Solids	
	Limited-contact recreation	Nonsupport	Fecal Coliform	
	Fish/Wildlife Prop, Rec, Stock	Full Support		
	Irrigation	Full Support		

Waterbody Name	Designated Use	Use Support/ Attainment	Impairment	TMDL Priority
Nebraska				
Keya Paha River	Recreation	Impaired	E. coli	
	Class A Warmwater Aquatic Life	Supported		
	Agricultural Water Supply	Supported		
	Aesthetics	Supported		
Niobrara River	Recreation	Impaired	E. coli	
	Class A Warmwater Aquatic Life	Supported		
	Agricultural Water Supply	Supported		
	Aesthetics	Supported		
Loup River	Recreation	Impaired	E. coli	
	Class A Warmwater Aquatic Life	Supported		
	Agricultural Water Supply	Supported		
	Aesthetics	Supported		
Prairie Creek	Class B Warmwater Aquatic Life	Impaired	Low dissolved oxygen	
	Agricultural Water Supply	Supported		
	Aesthetics	Supported		
Big Blue River	Class B Warmwater Aquatic Life	Impaired	Low dissolved oxygen, May-June atrazine	
	Agricultural Water Supply	Supported		
	Aesthetics	Supported		
Oklahoma – Gulf Coast Segment				
Carl Blackwell Lake	Aesthetics	Fully Supporting	Color, Turbidity	2
	Agricultural	Insufficient Information		

Waterbody Name	Designated Use	Use Support/ Attainment	Impairment	TMDL Priority
	Warm Water Aquatic Community	Not Supporting		
	Industrial and Municipal Process and Cooling Water	Insufficient Information		
	Public and Private Water Supply	Insufficient Information		
	Public and Private Water Supply	Insufficient Information		
	Fish Consumption	Not Assessed		
	Sensitive Water Supply	Not Assessed		
Council Creek	Aesthetics	Fully Supporting, .	Enterococcus, Fecal Coliform	3
	Agriculture	Fully Supporting		
	Warm Water Aquatic Community	Insufficient Information		
	Industrial and Municipal Process and Cooling Water	Fully Supporting		
	Public and Private Water Supply	Not Supporting		
	Fish Consumption	Fully Supporting		
Salt Creek	Aesthetics	Insufficient Information,	Turbidity, Chloride, Dissolved Oxygen, Total Dissolved Solids, Fishes Bioassessments, Sedimentation, Sediments, Enterococcus, Escherichia coli, Fecal Coliform, Sulfates,	2,3,4
	Agriculture	Insufficient Information		
	Warm Water Aquatic Community	Insufficient Information		
	Industrial and Municipal Process and Cooling Water	Not Assessed		
	Primary Body Contact Recreation	Not Supporting		
	Public and Private Water Supply	Insufficient Information		
	Fish Consumption	Not Assessed		

Waterbody Name	Designated Use	Use Support/ Attainment	Impairment	TMDL Priority
Dugout Creek	Aesthetics,	Insufficient Information	Dissolved Oxygen, Turbidity, Enterococcus, Escherichia coli	4
	Agriculture,	Insufficient Information		
	Warm Water Aquatic Community,	Not Supporting		
	Industrial and Municipal Process and Cooling Water,	Not Assessed		
	Primary Body Contact Recreation	Not Supporting		
	Public and Private Water Supply	Insufficient Information		
	Fish Consumption	Not Assessed		
Cushing Lake	Aesthetics,	Fully Supporting	Copper, Turbidity	2
	Agriculture,	Insufficient Information		
	Warm Water Aquatic Community,	Not Supporting		
	Industrial and Municipal Process and Cooling Water,	Insufficient Information		
	Primary Body Contact Recreation	Insufficient Information		
	Public and Private Water Supply	Insufficient Information		
	Fish Consumption	Not Assessed		

Waterbody Name	Designated Use	Use Support/ Attainment	Impairment	TMDL Priority
Euchee Creek	Aesthetics	Fully Supporting	Turbidity, pH, Enterococcus,	3
	Agriculture	Fully Supporting		
	Emergency Water Supply	Fully Supporting		
	Warm Water Aquatic Community	Not Supporting		
	Industrial and Municipal Process and Cooling System	Insufficient Information		
	Primary Body Contact Recreation	Not Supporting		
	Fish Consumption	Not Assessed		
Cottonwood Creek	Aesthetics	Insufficient Infromation	Sulfates, Enterococcus, Escherichia coli, Fecal Coliform, Dissolved Oxygen, Turbidity, pH,	1,3,4
	Agriculture	Not Assessed		
	Emergency Water Supply	Fully Supporting		
	Warm Water Aquatic Community	Not Supporting		
	Industrial and Municipal Process and Cooling System	Not Assessed		
	Primary Body Contact Recreation	Not Supporting		
	Fish Consumption	Not Assessed		
Little Deep Fork Creek	Aesthetic	Fully Supporting	Turbidity, Enterococcus, Escherichia coli, Fecal Coliform	3
	Agriculture	Fully Supporting		
	Habitat Limited Aquatic Community	Not Assessed		
	Warm Water Aquatic Community	Insufficient Information,		
	Industrial and Municipal Process and Cooling Water	Not Assessed		
	Primary Body Contact Recreation	Not Supporting		
	Public and Private Water Supply,	Fully Supporting		

Waterbody Name	Designated Use	Use Support/ Attainment	Impairment	TMDL Priority
	Secondary Body Contact Recreation	Not Assessed		
	Fish Consumption	Not Assessed		
Spring Creek, West	Aesthetic	Insufficient Information	Chloride, Total Dissolved Solids	2
	Agriculture	Not Supporting		
	Warm Water Aquatic Community	Insufficient Information		
	Industrial and Municipal Process and Cooling Water	Insufficient Information		
	Primary Body Contact Recreation	Not Assessed		
	Public and Private Water Supply	Insufficient Information		
	Fish Consumption	Not Assessed		
Catfish Creek	Aesthetic	Insufficient Information	Chloride, Total Dissolved Solids, Turbidity	2
	Agricultural	Not Supporting		
	Warm Water Aquatic Community	Not Supporting		
	Industrial and Municipal Process and Cooling Water	Not Assessed		
	Primary Body Contact Recreation	Not Assessed		
	Fish Consumption	Not Assessed		
Tiger Creek	Aesthetic	Fully Supporting	Chloride, Total Dissolved Solids	4
	Agriculture	Not Supporting		
	Warm Water Aquatic Community	Fully Supporting		
	Industrial and Municipal Process and Cooling Water	Insufficient Information		
	Primary Body Contact Recreation	Not Assessed		
	Fish Consumption	Not Assessed		

Waterbody Name	Designated Use	Use Support/ Attainment	Impairment	TMDL Priority
Canadian River, Deep Fork	Aesthetic	Fully Supporting	Turbidity, Enterococcus, Chromium (Total), Lead, Fecal Coliform	1, 2
	Agriculture	Fully Supporting		
	Warm Water Aquatic Community	Insufficient Information		
	Industrial and Municipal Process and Cooling Water	Fully Supporting		
	Primary Body Contact Recreation	Not Supporting		
	Public and Private Water Supply	Not Supporting		
	Fish Consumption	Not Assessed		
	Sensitive Water Supply	Not Assessed		
Hilliby Creek	Aesthetic	Insufficient Information	Fishes Bioassessments	2
	Agriculture	Insufficient Information		
	Warm Water Aquatic Community	Not Supporting		
	Industrial and Muncipal Process and Cooling Water	Not Assessed		
	Primary Body Contact Recreation	Not Assessed		
	Fish Consumption	Not Assessed		
Sand Creek	Aesthetic	Insufficient Information	Enterococcus, Escherichia coli, Fecal Coliform, Chloride, Total Dissolved Solids,	1,2
	Agriculture	Insufficient Information		
	Warm Water Aquatic Community	Insufficient Information		
	Industrial and Municipal Process and Cooling Water	Insufficient Information		
	Primary body Contact Recreation	Not Supporting		
	Public and Private Water Supply	Insufficient Information		
	Fish Consumption	Not Assessed		

Waterbody Name	Designated Use	Use Support/ Attainment	Impairment	TMDL Priority
Little Wewoka Creek	Aesthetic	Insufficient Information	Dissolved Oxygen	3
	Agriculture	Fully Supporting		
	Warm Water Aquatic Community	Not Supporting		
	Industrial and Municipal Process and Cooling Water	Fully Supporting		
	Primary body Contact Recreation	Not Assessed		
	Public and Private Water Supply	Not Assessed		
	Fish Consumption	Not Assessed		
Wewoka Creek	Aesthetic	Fully Supporting	Chloride, Turbidity, Fecal Coliform, Cadmium, Nitrates, Sulfates, Total Dissolved Solids,	1
	Agriculture	Not Supporting		
	Habitat Limited Aquatic Community	Not Assessed		
	Industrial and Municipal Process and Cooling Water	Insufficient Information		
	Public and Private Water Supply	Not Supporting		
	Secondary Body Contact Recreation	Not Assessed		
	Fish Consumption	Not Assessed		
	Aesthetic	Fully Supporting		
Bird Creek	Aesthetic	Insufficient Information	Cadmium, Lead, Turbidity, Zinc, Enteroccocus, Fecal Coliform,	1,2
	Agriculture	Insufficient Information		
	Habitat Limited Aquatic Community	Not Supporting		
	Industrial and Municipal Process and Cooling Water	Insufficient Information		

Waterbody Name	Designated Use	Use Support/ Attainment	Impairment	TMDL Priority
	Secondary Body Contact Recreation,	Insufficient Information	Escherichia coli,	
	Fish Consumption	Not Assessed		
Little River	Aesthetic	Insufficient Information	Dissolved oxygen, Turbidity, Lead, Enterococcus,	1,2
	Agriculture	Fully Supporting		
	Warm Water Aquatic Community	Not Supporting		
	Industrial and Municipal Process and Cooling Water	Fully Supporting		
	Primary Body Contact Recreation	Not Supporting		
	Public and Private Water Supply	Insufficient Information		
	Fish Consumption	Insufficient Information		
Canadian River	Aesthetic	Insufficient Information	Sulfates, Turbidity, Enteroccus, Total Dissolved oxygen, Lead, Fecal Coliform, Chloride,	1,2
	Agriculture	Not Supporting		
	Warm Water Aquatic Community	Not Supporting		
	Industrial and Municipal Process	Insufficient Information		
	Primary Body Contact Recreation	Not Supporting		
	Public and Private Water Supply	Insufficient Information		
	Fish Consumption	Insufficient Information		
Big Creek	Aesthetic	Insufficient Information	Enteroccocus, Escherichia coli	3
	Agriculture	Not Supporting		
	Warm Water Aquatic Community	Insufficient Information		
	Industrial and Municipal Process	Insufficient Information		
	Primary Body Contact Recreation	Not Assessed		
	Public and Private Water Supply	Insufficient Information		

Waterbody Name	Designated Use	Use Support/ Attainment	Impairment	TMDL Priority
	Fish Consumption	Not Assessed		
	Aesthetic	Insufficient Information		
Muddy Boggy Creek	Aesthetic	Insufficient Information	Lead, Turbidity, Enteroccocus, Fecal Coliform, Dissolved Oxygen, Chloride, Total Dissolved Solids, pH	1
	Agriculture	Fully Supporting		
	Warm Water Aquatic Community	Not Supporting		
	Industrial and Municipal Process,	Fully Supporting		
	Primary Body Contact Recreation	Not Supporting		
	Public and Private Water Supply	Insufficient Information		
	Fish Consumption	Insufficient Information		
	Aesthetic	Insufficient Information		
Clear Boggy Creek	Aesthetic	Insufficient Information	Lead, Turbidity, Enterococcus, Fecal Coliform	1
	Agriculture	Fully Supporting		
	Warm Water Aquatic Community	Not Supporting		
	Industrial and Municipal Process,	Fully Supporting		
	Primary Body Contact Recreation	Not Supporting		
	Public and Private Water Supply	Insufficient Information		
	Fish Consumption	Insufficient Information		

Waterbody Name	Designated Use	Use Support/ Attainment	Impairment	TMDL Priority
Blue River	Aesthetic	Insufficient Information	Enterococcus	1
	Agriculture	Fully Supporting		
	Warm Water Aquatic Community	Not Supporting		
	Industrial and Municipal Process	Fully Supporting		
	Primary Body Contact Recreation	Not Supporting		
	Public and Private Water Supply	Insufficient Information		
	Fish Consumption	Insufficient Information		
Kiamichi River	Aesthetic	Insufficient Information	Turbidity, Enterococcus, Copper	1,2
	Agriculture	Fully Supporting		
	Warm Water Aquatic Community	Not Supporting		
	Industrial and Municipal Process	Fully Supporting		
	Primary Body Contact Recreation	Not Supporting		
	Public and Private Water Supply	Fully Supporting		
	Fish Consumption	Insufficient Information		
Red River	Aesthetic	Insufficient Information	Chloride, Sulfates, Total Dissolved Oxygen, Turbidity, Enterococcus, Lead, Selenium,	2,4
	Agriculture	Not Supporting		
	Warm Water Aquatic Community	Not Supporting		
	Industrial and Municipal Process	Insufficient Information		
	Primary Body Contact Recreation	Not Supporting		
	Public and Private Water Supply	Insufficient Information		
	Fish Consumption	Insufficient Information		

Waterbody Name	Designated Use	Use Support/ Attainment	Impairment	TMDL Priority
Texas				
Alligator Bayou	Aquatic Life	Not Supporting	Impaired fish community, Toxicity in water, Toxicity in Sediment	5c
	Recreation	Not Assessed		
	General	N/A		
	Fish Consumption	Not Assessed		
	Public Water Supply	N/A		
	Oyster Water	N/A		
	Overall Use	Not Supporting		
Angelina River	Aquatic Life	Fully Supporting	Bacteria, depressed dissolved oxygen, impaired fish community, mercury in edible tissue	5c
	Recreation	Fully Supporting		
	General	Fully Supporting		
	Fish Consumption	Fully Supporting		
	Public Water Supply	Fully Supporting		
	Oyster Water	N/A		
	Overall Use	Fully Supporting		
Attoyac Bayou	Aquatic Life	Fully Supporting	Bacteria	5c
	Recreation	Not Supporting		
	General	Fully Supporting		
	Fish Consumption	Fully Supporting		
	Public Water Supply	Fully Supporting		
	Oyster Water	N/A		

Waterbody Name	Designated Use	Use Support/ Attainment	Impairment	TMDL Priority
	Overall Use	Not Supporting		
Beech Creek	Aquatic Life	Fully Supporting	Bacteria	5c
	Recreation	Fully Supporting		
	General	N/A		
	Fish Consumption	Not Assessed		
	Public Water Supply	N/A		
	Oyster Water	N/A		
	Overall Use	Fully Supporting		
Big Cypress Creek	Aquatic Life	Fully Supporting	pH, Mercury in edible tissue, bacteria	5a, 5b, 5c
	Recreation	Not Assessed		
	General	Fully Supporting		
	Fish Consumption	Partially Supporting		
	Public Water Supply	Fully Supporting		
	Oyster Water	N/A		
	Overall Use	Partially Supporting		

Waterbody Name	Designated Use	Use Support/ Attainment	Impairment	TMDL Priority
Big Sandy Creek	Aquatic Life	Fully Supporting	Bacteria	5c
	Recreation	Fully Supporting		
	General	Fully Supporting		
	Fish Consumption	Not Assessed		
	Public Water Supply	Fully Supporting		
	Oyster Water	N/A		
	Overall Use	Fully Supporting		
Biloxi Creek	Aquatic Life	Fully Supporting	Bacteria, depressed dissolved oxygen	5c
	Recreation	Not Supporting		
	General	N/A		
	Fish Consumption	Not Assessed		
	Public Water Supply	N/A		
	Oyster Water	N/A		
	Overall Use	Not Supporting		
Boggy Creek	Aquatic Life	Fully Supporting	Depressed dissolved oxygen	5b
	Recreation	Not Assessed		
	General	N/A		
	Fish Consumption	Not Assessed		
	Public Water Supply	N/A		
	Oyster Water	N/A		
	Overall Use	Fully Supporting		

Waterbody Name	Designated Use	Use Support/ Attainment	Impairment	TMDL Priority
Cedar Bayou	Aquatic Life	Fully Supporting	Dioxins in edible tissue, PCBs in edible tissue, bacteria, impaired macrobenthic community	5a 5c
	Recreation	Fully Supporting		
	General	Fully Supporting		
	Fish Consumption	Not Assessed		
	Public Water Supply	Fully Supporting		
	Oyster Water	N/A		
	Overall Use	Fully Supporting		
Cedar Creek	Aquatic Life	Fully Supporting	Bacteria	5c
	Recreation	Not Supporting		
	General	N/A		
	Fish Consumption	Not Assessed		
	Public Water Supply	N/A		
	Oyster Water	N/A		
	Overall Use	Not Supporting		
Cooper Lake	Aquatic Life	Fully Supporting	pH	5b
	Recreation	Not Assessed		
	General	Partially Supporting		
	Fish Consumption	Not Assessed		
	Public Water Supply	Fully Supporting		
	Oyster Water	N/A		

Waterbody Name	Designated Use	Use Support/ Attainment	Impairment	TMDL Priority
	Overall Use	Partially Supporting		
Cypress Creek	Aquatic Life	Partially Supporting	Bacteria, Depressed Oxygen, Aluminum	5c
	Recreation	Fully Supporting		
	General	N/A		
	Fish Consumption	Not Assessed		
	Public Water Supply	N/A		
	Oyster Water	N/A		
	Overall Use	Partially Supporting		
East Fork Angelina River	Aquatic Life	Not Assessed	Bacteria, Lead,	5a 5c
	Recreation	Not Assessed		
	General	N/A		
	Fish Consumption	Not Assessed		
	Public Water Supply	N/A		
	Oyster Water	N/A		
	Overall Use	Not Assessed		
Elm Creek	Aquatic Life	Fully Supporting	Depressed dissolved oxygen	5a
	Recreation	Not Assessed		
	General	N/A		
	Fish Consumption	Not Assessed		
	Public Water Supply	N/A		
	Oyster Water	N/A		

Waterbody Name	Designated Use	Use Support/ Attainment	Impairment	TMDL Priority
	Overall Use	Fully Supporting		
Harris Creek	Aquatic Life	Fully Supporting	Depressed dissolved oxygen	5b
	Recreation	Fully Supporting		
	General	N/A		
	Fish Consumption	Not Assessed		
	Public Water Supply	N/A		
	Oyster Water	N/A		
	Overall Use	Fully Supporting		
Hillebrandt Bayou	Aquatic Life	Fully Supporting	Depressed dissolved oxygen	5a
	Recreation	Fully Supporting		
	General	Fully Supporting		
	Fish Consumption	Not Assessed		
	Public Water Supply	N/A		
	Oyster Water	N/A		
	Overall Use	Fully Supporting		
Hurricane Creek	Aquatic Life	Not Assessed	Bacteria	5c
	Recreation	Not Assessed		
	General	N/A		
	Fish Consumption	Not Assessed		
	Public Water Supply	N/A		
	Oyster Water	N/A		

Waterbody Name	Designated Use	Use Support/ Attainment	Impairment	TMDL Priority
	Overall Use	Not Assessed		
Jack Creek	Aquatic Life	Fully Supporting	Bacteria	5c
	Recreation	Not Supporting		
	General	N/A		
	Fish Consumption	Not Assessed		
	Public Water Supply	N/A		
	Oyster Water	N/A		
	Overall Use	Not Supporting		
La Nana Bayou	Aquatic Life	Fully Supporting	Bacteria	5c
	Recreation	Not Supporting		
	General	N/A		
	Fish Consumption	Not Assessed		
	Public Water Supply	N/A		
	Oyster Water	N/A		
	Overall Use	Not Supporting		
Lake Cypress Spring	Aquatic Life	Fully Supporting	Depressed Dissolved Oxygen	5c
	Recreation	Not Assessed		
	General	Fully Supporting		
	Fish Consumption	Not Assessed		
	Public Water Supply	Fully Supporting		
	Oyster Water	N/A		
	Overall Use	Fully Supporting		

Waterbody Name	Designated Use	Use Support/ Attainment	Impairment	TMDL Priority
Lake Kimball	Aquatic Life	Not Assessed	Mercury in edible tissue	5c
	Recreation	Not Assessed		
	General	N/A		
	Fish Consumption	Partially Supporting		
	Public Water Supply	N/A		
	Oyster Water	N/A		
	Overall Use	Partially Supporting		
Lake Livingston	Aquatic Life	Fully Supporting	pH, sulfate	5c
	Recreation	Fully Supporting		
	General	Partially Supporting		
	Fish Consumption	Fully Supporting		
	Public Water Supply	Fully Supporting		
	Oyster Water	N/A		
	Overall Use	Partially Supporting		
Lake Palestine	Aquatic Life	Fully Supporting	pH	5c
	Recreation	Not Assessed		
	General	Fully Supporting		
	Fish Consumption	Fully Supporting		
	Public Water Supply	Fully Supporting		
	Oyster Water	N/A		
	Overall Use	Fully Supporting		
Little Cypress Bayou	Aquatic Life	Fully Supporting	Bacteria, depressed dissolved oxygen	5c

Waterbody Name	Designated Use	Use Support/ Attainment	Impairment	TMDL Priority
	Recreation	Fully Supporting		
	General	Fully Supporting		
	Fish Consumption	Fully Supporting		
	Public Water Supply	Fully Supporting		
	Oyster Water	N/A		
	Overall Use	Fully Supporting		
Little Pine Island Bayou	Aquatic Life	Partially Supporting	Depressed dissolved oxygen, bacteria	5b 5c
	Recreation	Fully Supporting		
	General	N/A		
	Fish Consumption	Not Assessed		
	Public Water Supply	N/A		
	Oyster Water	N/A		
	Overall Use	Partially Supporting		
Little White Oak Creek	Aquatic Life	Partially Supporting	Bacteria, depressed dissolved oxygen	5a 5c
	Recreation	Not Supporting		
	General	N/A		
	Fish Consumption	Not Assessed		

Waterbody Name	Designated Use	Use Support/ Attainment	Impairment	TMDL Priority
	Public Water Supply	N/A		
	Oyster Water	N/A		
	Overall Use	Not Supporting		
Mill Creek	Aquatic Life	Fully Supporting	Depressed dissolved oxygen	5c
	Recreation	Fully Supporting		
	General	N/A		
	Fish Consumption	Not Assessed		
	Public Water Supply	N/A		
	Oyster Water	N/A		
	Overall Use	Fully Supporting		
Neches River	Aquatic Life	Not Supporting	Lead, bacteria, depressed dissolved oxygen, pH, zinc	5c
	Recreation	Fully Supporting		
	General	Fully Supporting		
	Fish Consumption	Fully Supporting		
	Public Water Supply	Fully Supporting		

Waterbody Name	Designated Use	Use Support/ Attainment	Impairment	TMDL Priority
	Oyster Water	N/A		
	Overall Use	Not Supporting		
North Sulphur	Aquatic Life	Fully Supporting	Impaired macrobenthic community, impaired fish community	5b
	Recreation	Fully Supporting		
	General	Fully Supporting		
	Fish Consumption	Not Assessed		
	Public Water Supply	N/A		
	Oyster Water	N/A		
	Overall Use	Fully Supporting		
Papermill Creek	Aquatic Life	Fully Supporting	Bacteria	5c
	Recreation	Fully Supporting		
	General	N/A		
	Fish Consumption	Fully Supporting		
	Public Water Supply	N/A		
	Oyster Water	N/A		

Waterbody Name	Designated Use	Use Support/ Attainment	Impairment	TMDL Priority
	Overall Use	Fully Supporting		
Pin Oak Creek	Aquatic Life	Fully Supporting	Bacteria	5a
	Recreation	Not Supporting		
	General	N/A		
	Fish Consumption	Not Addressed		
	Public Water Supply	N/A		
	Oyster Water	N/A		
	Overall Use	Not Supporting		
Pine Island Bayou	Aquatic Life	Fully Supporting	Depressed dissolved oxygen, bacteria	5b
	Recreation	Fully Supporting		
	General	Fully Supporting		
	Fish Consumption	Not Addressed		
	Public Water Supply	Fully Supporting		
	Oyster Water	N/A		
	Overall Use	Fully Supporting		

Waterbody Name	Designated Use	Use Support/ Attainment	Impairment	TMDL Priority
Texas-Houston Lateral				
Cedar Bayou Above Tidal	Multiple	NA	E. coli	
San Jacinto River Above Tidal	Multiple	NA	E. coli, Depressed oxygen, Bacteria	

1 Source: NDDH 2004.
1A = TMDLs are scheduled for completion in the next two years.
1B = TMDL activities (e.g., monitoring or modeling) are scheduled to begin in the next two years.
2 = scheduled for TMDL development in the next 10 years.
3 = impaired for fish consumption due to methyl mercury (low priority for state due to complexities related to fate and transport of methyl mercury and due to interstate and international nature of atmospheric mercury sources.

2 Source: SDDENR 2004.

3 Source: [].
Category 2 = Some of the designated uses are met but there is insufficient information to determine if all uses are being met; Category 3 = Insufficient data to determine if any beneficial uses are being met; Category 5 = One or more beneficial uses are determined to be impaired by one or more pollutants and all of the TMDLs have not been developed. Category 5 waters constitute the Section 303(d) list subject to EPA approval/disapproval.

4 Source: [
Priority Levels – unknown.

5 Source: []
Priority M – Medium.
Priority H – High.

6. Source: Oklahoma Department of Environmental Quality 2006
Priority Rankings

1= TMDL Year 2006-2007

2= TMDL Year 2008-2009

3= TMDL Year 2010-2012

4= TMDL Year 2012-2019

7. Source: Texas Commission of Environmental Quality 2008

Waterbody Name	Designated Use	Use Support/ Attainment	Impairment	TMDL Priority

Category 5a- A TMDL is underway, or will be scheduled

Category 5b- A review of the water quality standards for this water body will be conducted before a TMDL is scheduled

Category 5c- Additional data and information will be collected before a TMDL is scheduled.