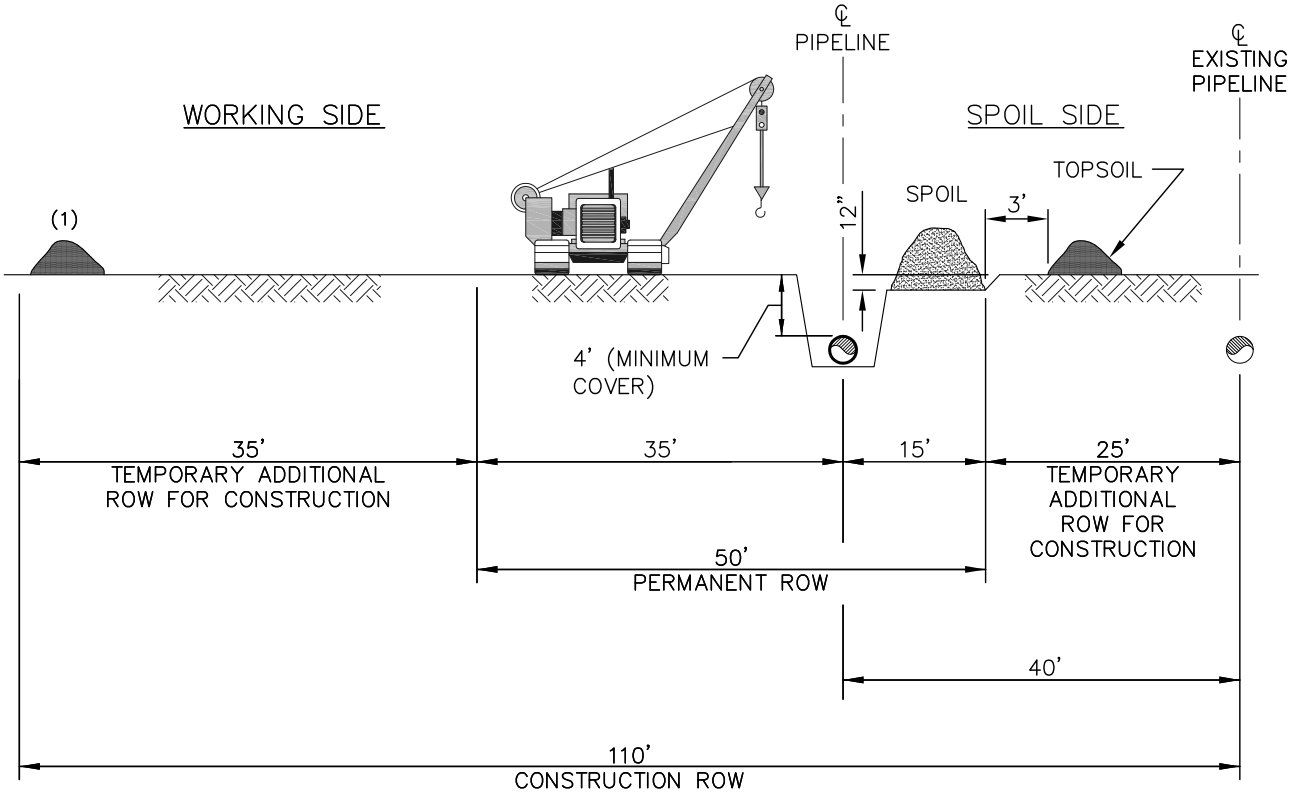

(1) ALTERNATE TOPSOIL PLACEMENT LOCATIONS

REVISIONS		
1	11.05.08	REMOVED TOPSOIL NEAR TRENCH; MODIFIED TITLE
2	05.29.09	REVISED DIMENSIONS & TOPSOIL LOCATION

G:\2000Drafting and GIS\CADFiles\Drawings\ER\Constr_ROW_Details_Sect2_REV2.dwg 5/29/2009 12:11:02 PM CDT

TransCanada
In business to deliver

KEYSTONE XL PROJECT

PREPARED BY:
TROW ENGINEERING CONSULTANTS, INC.
7505 NW Tiffany Springs Pkwy., Suite 400
Northpointe Circle I
Kansas City, MO 64153
Phone: 1-816-801-7063
Fax: 1-816-801-7048
Trow

ORIGINATOR: JOE A. NELSON (NAME) 9/08/08 (DATE)

CHECKED BY: TW

APPROVED BY: SS

Figure 2.1.4-2

FIA # 1399 | CHAINAGE: | DISCIPLINE # 03

TITLE: TYPICAL 110' CONSTRUCTION RIGHT-OF-WAY (36" PIPELINE) SPOIL SIDE ADJACENT AND CO-LOCATION TO EXISTING PIPELINE

SCALE N.T.S. | DWG No 1399-03-ML-03-460 | REV 2

LAST PLOT DATE: Fri, 12 Jun 2009 - 4:28pm

CADD DRAWING: DO NOT MAKE MANUAL REVISIONS PLOTTED SIZE: ANSI A (8.5x11)