THESE ARE TYPICAL DRAWINGS; ACTUAL SITE CONDITIONS MAY VARY FROM THE SITE GRAPHICALLY REPRESENTED.

Typical Drawing Index

Detail 1	Typical Silt Fence Barrier
Detail 2	Typical Straw or Hay Bail Barrier
Detail 3	Temporary/Permanent Slope Breaker Detail (Water Bars)
Detail 4	Erosion Control Matting Installation
Detail 5	Typical Dewatering Filter Bag
Detail 6	Typical Straw Bale Dewatering Structure
Detail 7	Typical Permanent Trench Breakers
Detail 8	"Dry" Wetland Crossing Method
Detail 9	Standard Wetland Crossing Method
Detail 10	Push/Pull Wetland Crossing Method
Detail 11	Typical Open Cut Wet Crossing Method Non-Flowing Waterbody
Detail 12	Typical Open Cut Wet Crossing Method Flowing Waterbody
Detail 12a	Typical Open Cut Wet Crossing Method Flowing Waterbody - Construction Procedures
Detail 13	Typical Dry Flume Crossing Method
Detail 13a	Typical Dry Flume Crossing Method - Construction Procedures
Detail 14	Typical Dam and Pump Crossing
Detail 14a	Typical Dam and Pump Crossing - Construction Procedures
Detail 15	Typical Horizontal Drill (HDD) Site Plan & Profile
Detail 16	Typical Temporary Bridge Crossing
Detail 16a	Typical Temporary Bridge Crossing - Construction Procedures
Detail 17	Typical Flume Bridge Crossing
Detail 18	Typical Railcar Bridge Crossing
Detail 18a	Typical Railcar Bridge Crossing - Construction Procedures
Detail 19	Flexible Channel Liner Installation
Detail 20	Typical Rock Rip-Rap
Detail 21	Typical Road Bore Crossing
Detail 22	Streambank Reclamation - Brush Layer in Cross Cut Slope
Detail 23	Streambank Reclamation - Log Wall
Detail 24	Streambank Reclamation - Vegetated Geotextile Installation
Detail 25	Typical ROW Layout/Soil Handling
Detail 26	Header/Main Crossovers of Pipeline
Detail 27	Relocate/Replace Drainage Header/Main
Detail 28	Temporary Drain Tile Repair
Detail 29	Permanent Repair Method of Drain Tiles
Detail 30	Equipment Cleaning Station Detail
Detail 31	Equipment Wash Station Detail
Detail 67	Topsoil Conservation Ditch & Spoil Stripping Triple Ditch
Detail 67A	Topsoil Conservation Ditch & Spoil Stripping Triple Ditch

NOTE: **The following typical drawings are included for ease of reference.**

- Details 1 through 31 can be found in the Construction Mitigation and Reclamation Plan

REVISIONS			
01	2008-11-05	REVISED TITLES, ADDED/DEL. DETAILS	
02	2010-10-08	REVISED TITLES	
03	2010-10-11	REVISED TITLE BLOCK	

2010-10-15 9:16am G:\2000DraftingandGIS\CADFiles\Drawings\PhaseIV_IFB\Detail_Index.dwg Dan Tran

TransCanada
In business to deliver

PREPARED BY:
TROW ENGINEERING CONSULTANTS, INC.
2700 S. Post Oak Blvd., Suite 400
Houston, TX 77056
Phone: 1-713-693-6400
Fax: 1-713-693-6491
Trow

DESIGNER: JMP (NAME) 2008-09-08 (DATE)

CHECKED BY: WSF

DESIGN CHECKER: RW P7100

KEYSTONE STEELE CITY (NPS 36 2011) PHILLIPS SECTION

FIA # 4359 | CHAINAGE: | DISCIPLINE # 03

TITLE: DETAIL INDEX

SCALE: N.T.S. | DWG No 4359-03-ML-00-700 | REV 03

TC_A4_BR.DWG 8.5X11

CADD DRAWING: DO NOT MAKE MANUAL REVISIONS

THESE ARE TYPICAL DRAWINGS; ACTUAL SITE CONDITIONS MAY VARY FROM THE SITE GRAPHICALLY REPRESENTED.

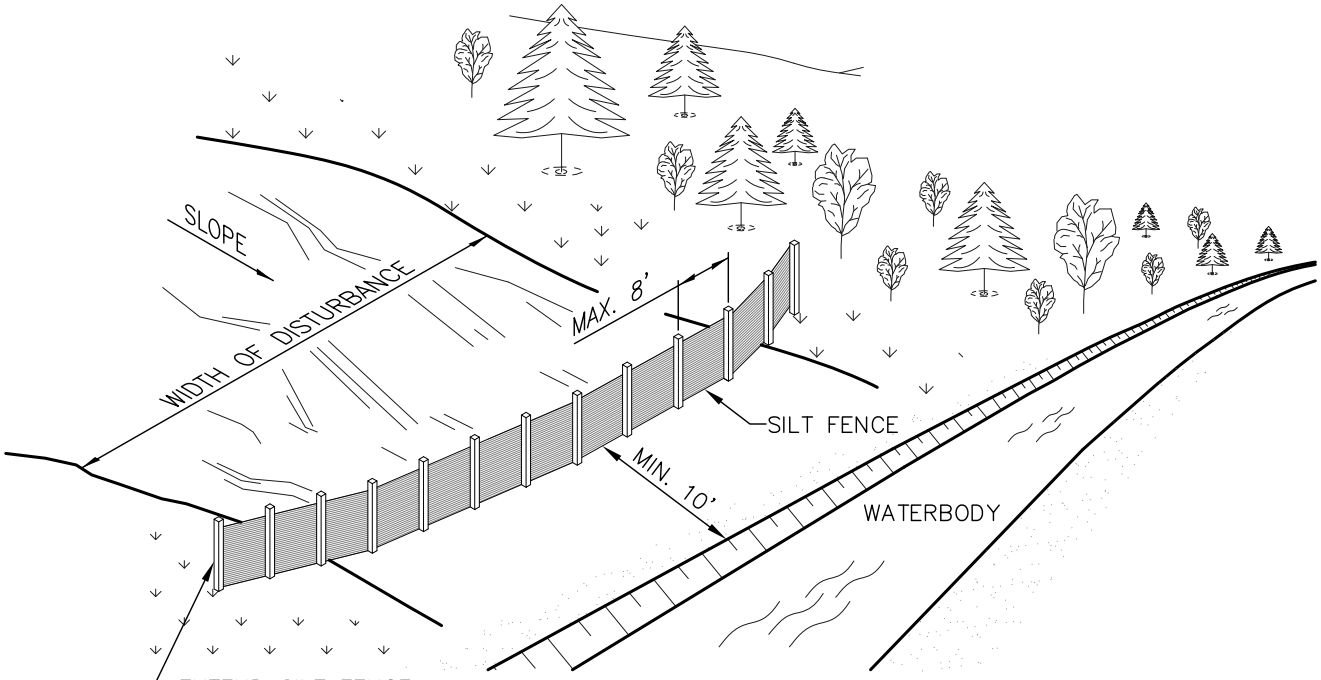

PLAN

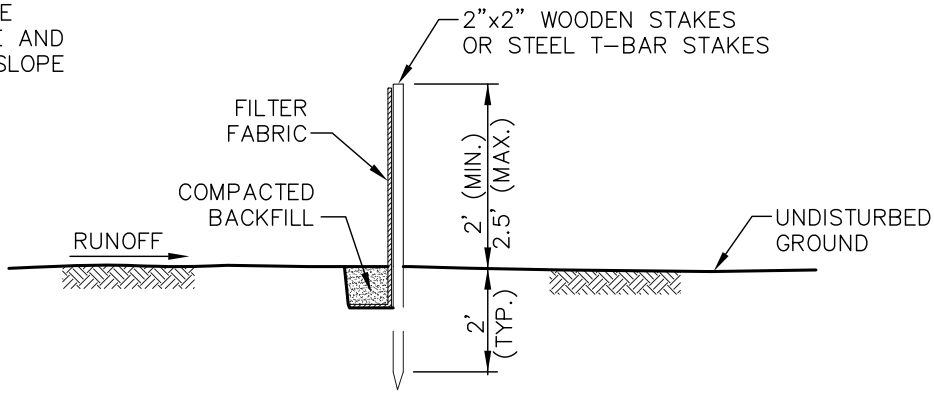

SECTION "A-A"

NOTES:

1. MATERIAL SHOULD BE WOVEN GEOTEXTILE FABRIC SUCH AS EXXON GTF 180 OR MIRAFI 600X, OR AN APPROVED EQUIVALENT. SECONDARY REINFORCEMENT, SUCH AS A CONSTRUCTION BARRIER FENCE OR WIRE MESH CAN ALSO BE USED BEHIND THE FILTER FABRIC.
2. SILT FENCE TO BE REINFORCED WITH 2"x2" WOODEN STAKES OR STEEL T-BAR STAKES PLACED EVERY 8' OR CLOSER AS CONDITIONS REQUIRE.
3. ATTACH FILTER FABRIC AT EACH POST AT A MINIMUM OF 3 LOCATIONS.
4. THE FILTER FABRIC MINIMUM LENGTH OF 1' IS TO BE ANCHORED IN A TRENCH WITH WELL COMPACTED BACKFILL OVER THE FABRIC TO PREVENT UNDERMINING.
5. TO ELIMINATE POSSIBLE END FLOW, BOTH ENDS OF THE SILT FENCE SHALL BE TURNED AND EXTENDED UPSLOPE.
6. SILT FENCES ARE TO BE CHECKED AND MAINTAINED ON A REGULAR BASIS. REMOVE ANY BUILD-UP OF SEDIMENT. REPLACE DAMAGED OR INEFFECTIVE SILT FENCE AS SOON AS POSSIBLE.
7. WHERE ANCHORING CONDITIONS FOR THE SILT FENCE ARE POOR, PLACE STRAW BALES ON DOWNSTREAM SIDE OF THE SILT FENCE.
8. INSTALLATION TO BE MODIFIED BY THE PROJECT AS NECESSARY TO SUIT ACTUAL SITE CONDITIONS.

REVISIONS		
01	2008-11-04	UPDATED DRAWING NOTES
02	2010-10-08	UPDATED DRAWING NOTES
03	2010-10-11	REVISED TITLE BLOCK

2010-10-15 9:39am G:\2000DraftingandGIS\CADFiles\Drawings\PhaseIV_IFB\Erosion_Details_20081104.dwg Dan Tran

TransCanada
In business to deliver

PREPARED BY:
TROW ENGINEERING CONSULTANTS, INC.
2700 S. Post Oak Blvd., Suite 400
Houston, TX 77056
Phone: 1-713-693-6400
Fax: 1-713-693-6491
Trow

DESIGNER: JMP (NAME) 2008-09-08 (DATE)

CHECKED BY: WSF

DESIGN CHECKER: RW P7100

KEYSTONE STEELE CITY (NPS 36 2011) PHILLIPS SECTION

FIA # 4359 | CHAINAGE: | DISCIPLINE # 03

TITLE

DETAIL 1
TYPICAL SILT FENCE BARRIER

SCALE N.T.S. | DWG No 4359-03-ML-05-701 | REV 03

TC_A4_BR.DWG 8.5X11

CADD DRAWING: DO NOT MAKE MANUAL REVISIONS

THESE ARE TYPICAL DRAWINGS; ACTUAL SITE CONDITIONS MAY VARY FROM THE SITE GRAPHICALLY REPRESENTED.

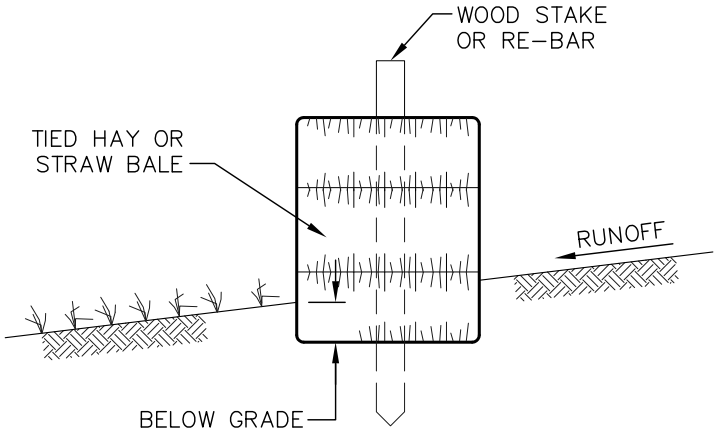

SECTION

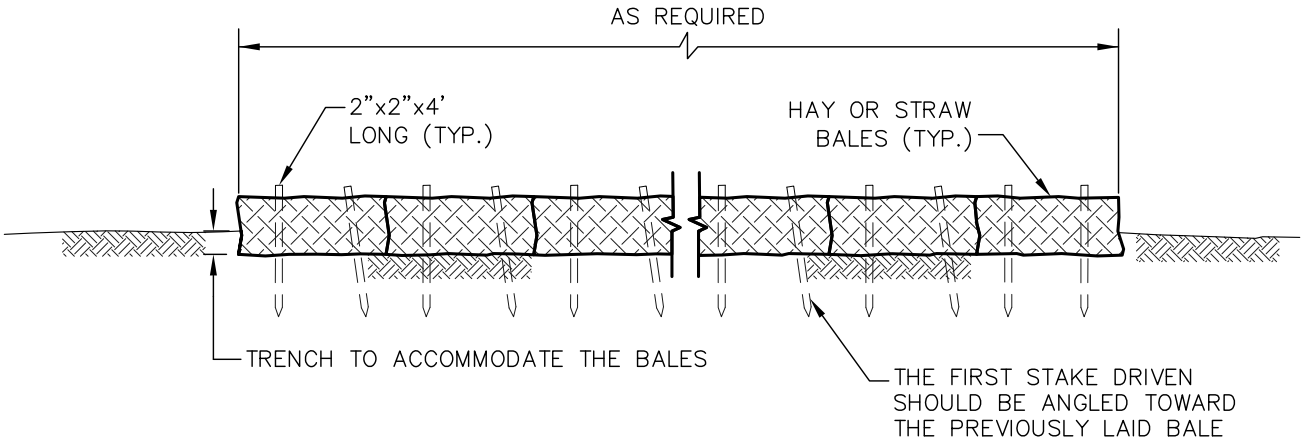

SECTION

NOTES:

1. TO ELIMINATE POSSIBLE END FLOW, BOTH ENDS OF THE STRAW BALE BARRIER SHOULD BE TURNED AND EXTENDED UPSLOPE.
2. EACH BALE SHOULD BE SECURED BY AT LEAST 2 STAKES. THE FIRST STAKE IN EACH BALE SHALL BE DRIVEN TOWARD THE PREVIOUSLY LAID BALE TO FORCE THE BALES TOGETHER. ANY GAPS CAN BE FILLED IN BY WEDGING LOOSE STRAW BETWEEN THE BALES. STAKES SHOULD BE DRIVEN. REBAR OR STANDARD "T" OR "U" STEEL POSTS CAN BE USED AS STAKES, BUT IT SHOULD BE NOTED THAT THEY MAY POSE A HAZARD TO EQUIPMENT IF THE BALES DISINTEGRATE.
3. COMPACT THE EXCAVATED SOIL AGAINST THE UPHILL SIDE OF THE BARRIER TO PREVENT PIPING.
4. STRAW OR HAY BALE BARRIERS REQUIRE CONTINUAL MAINTENANCE TO REMOVE COLLECTED SEDIMENT AND REPLACE DAMAGED BALES AS SOON AS POSSIBLE. PAY CLOSE ATTENTION TO THE REPAIR OF DAMAGED BALES, END RUNS AND UNDERCUTTING BENEATH BALES.
5. INSTALLATION TO BE MODIFIED BY THE PROJECT AS NECESSARY TO SUIT ACTUAL SITE CONDITIONS.

REVISIONS		
01	2008-11-04	UPDATED DRAWING NOTES
02	2010-10-08	UPDATED DRAWING NOTES
03	2010-10-11	UPDATED DRAWING NOTES

2010-10-15 9:42am G:\2000DraftingandGIS\CADFiles\Drawings\PhaseIV_IFB\Erosion_Details_20081104.dwg Dan Tran

TransCanada
In business to deliver

PREPARED BY:
TROW ENGINEERING CONSULTANTS, INC.
2700 S. Post Oak Blvd., Suite 400
Houston, TX 77056
Phone: 1-713-693-6400
Fax: 1-713-693-6491
Trow

DESIGNER: JMP (NAME) 2008-09-08 (DATE)

CHECKED BY: WSF

DESIGN CHECKER: RW P7100

KEYSTONE STEELE CITY (NPS 36 2011) PHILLIPS SECTION

FIA # 4359 | CHAINAGE: | DISCIPLINE # 03

TITLE

DETAIL 2
TYPICAL STRAW OR HAY BALE BARRIER

SCALE N.T.S. | DWG No 4359-03-ML-05-702 | REV 03

TC_A4_BR.DWG 8.5X11

CADD DRAWING: DO NOT MAKE MANUAL REVISIONS

THESE ARE TYPICAL DRAWINGS; ACTUAL SITE CONDITIONS MAY VARY FROM THE SITE GRAPHICALLY REPRESENTED.

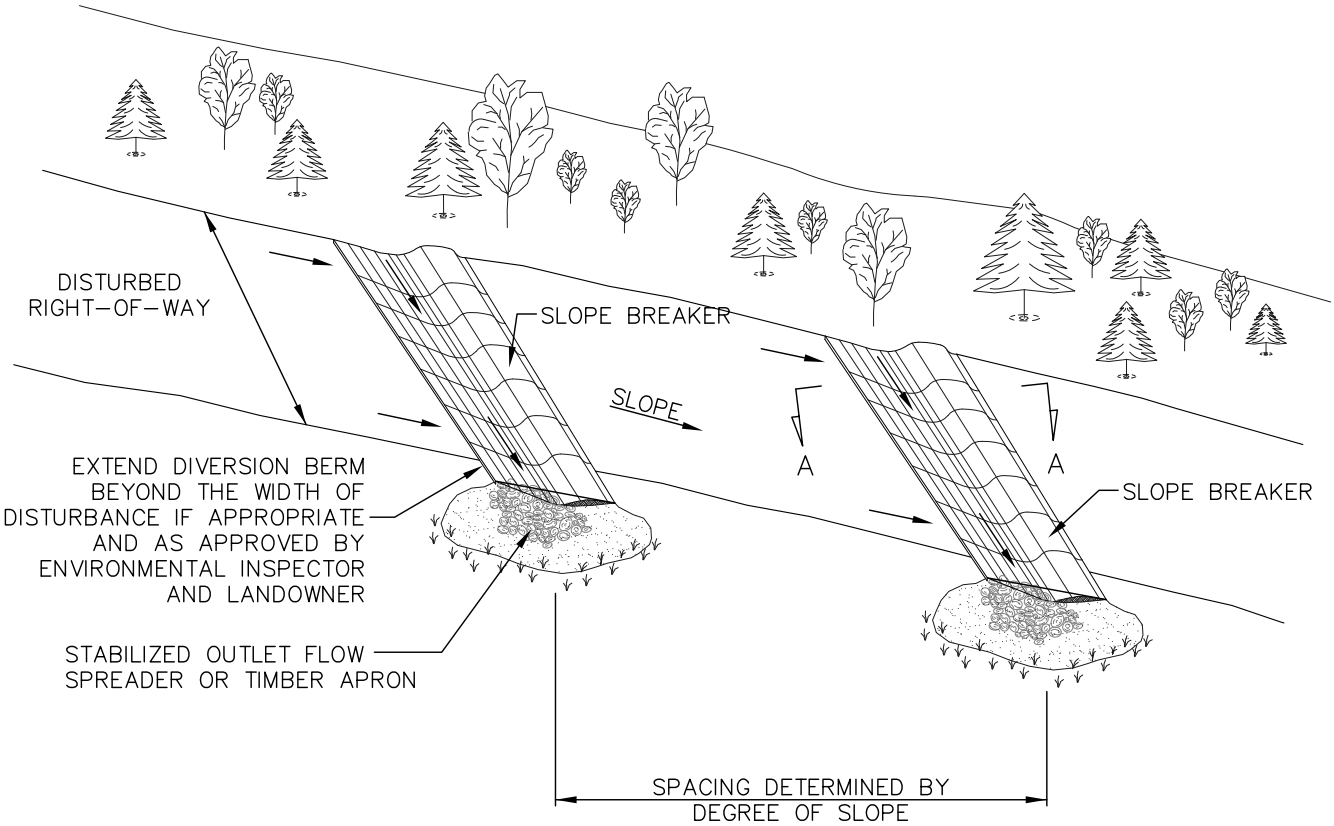

PLAN

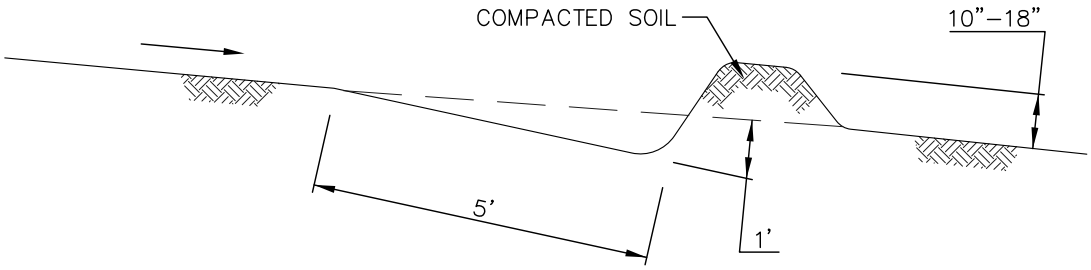

NOTES:

1. PERMANENT SLOPE BREAKERS TO PROVIDE POSITIVE DRAINAGE TO A STABILIZED OUTLET.
2. INSTALLATION SPECIFICATIONS TO BE MODIFIED BY THE PROJECT AS NECESSARY TO SUIT ACTUAL SITE CONDITIONS.
3. THE CONTRACTOR SHALL INSTALL TEMPORARY AND PERMANENT SLOPE BREAKERS ON SLOPES GREATER THAN APPROXIMATELY 5% ON ALL DISTURBED LANDS AT THE FOLLOWING RECOMMENDED SPACING:

SLOPE (%)	SPACING (FEET)
5–15	300
>15–30	200
>30	100

REVISIONS		
01	2008–11–04	MODIFIED DRAWING NOTES
02	2010–10–08	UPDATED DRAWING NOTES
03	2010–10–11	REVISED TITLE BLOCK

2010–10–15 9:48am G:\2000DraftingandGIS\CADFiles\Drawings\PhaseIV_IFB\Erosion_Details_20081104.dwg Dan Tran

TransCanada
In business to deliver

PREPARED BY:
TROW ENGINEERING CONSULTANTS, INC.
2700 S. Post Oak Blvd., Suite 400
Houston, TX 77056
Phone: 1–713–693–6400
Fax: 1–713–693–6491
Trow

DESIGNER: JMP (NAME) 2008–09–08 (DATE)

CHECKED BY: WSF

DESIGN CHECKER: RW P7100

KEYSTONE STEELE CITY (NPS 36 2011) PHILLIPS SECTION

FIA # 4359 | CHAINAGE: | DISCIPLINE # 03

TITLE
DETAIL 3
TEMPORARY/PERMANENT SLOPE BREAKER DETAIL
(WATER BARS)

SCALE N.T.S. | DWG No 4359–03–ML–05–703 | REV 03

TC_A4_BR.DWG 8.5X11

CADD DRAWING: DO NOT MAKE MANUAL REVISIONS

THESE ARE TYPICAL DRAWINGS; ACTUAL SITE CONDITIONS MAY VARY FROM THE SITE GRAPHICALLY REPRESENTED.

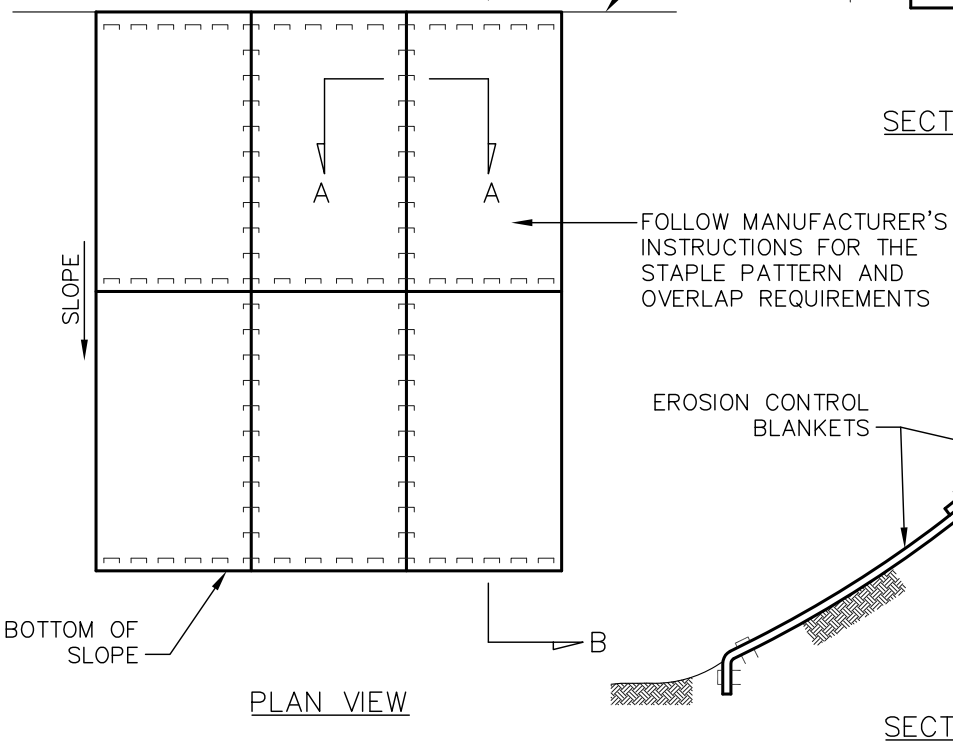

PLAN VIEW

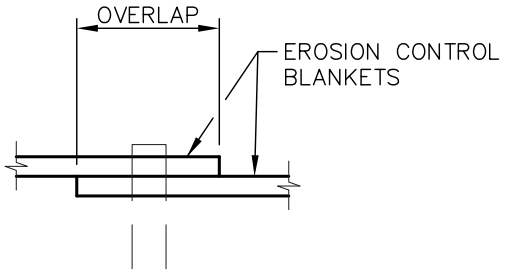

SECTION A–A

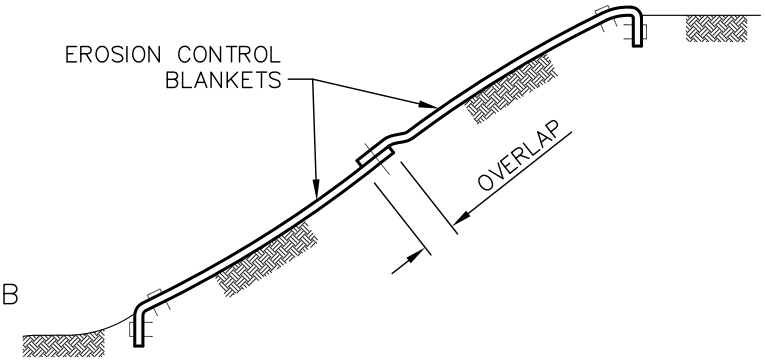

SECTION B–B

NOTES:

1. INSTALL MATTING IN ACCORDANCE WITH MANUFACTURER'S INSTRUCTIONS.
2. PREPARE SOIL BEFORE INSTALLING MATTING, INCLUDING GRADING, REMOVAL OF LARGE ROCKS AND DEBRIS, AND THE APPLICATION OF SEED AND FERTILIZER IF NOT USING PRE–SEEDED MATTING.
3. EROSION CONTROL MATTING SHALL EXTEND COMPLETELY ACROSS DISTURBED AREAS TO PROTECT ERODIBLE SURFACES.
4. BEGIN AT THE TOP OF THE SLOPE BY ANCHORING THE MATTING IN A TRENCH. BACKFILL AND COMPACT THE TRENCH AFTER STAPLING.
5. ROLL THE MATTING DOWN THE SLOPE IN THE DIRECTION OF THE WATER FLOW.
6. AS AN ALTERNATIVE TO STAPLES, WOODEN STAKES OR BIO–DEGRADEABLE PINS CAN BE USED WHERE SPECIFIED BY THE COMPANY.
7. ENSURE COMPLETE CONTACT BETWEEN THE MATTING AND THE SLOPE FACE. ADDITIONAL STAPLES CAN BE USE TO ELIMINATE GAPS.
8. INSTALLATION SPECIFICATIONS TO BE MODIFIED BY THE PROJECT AS NECESSARY TO SUIT ACTUAL SITE CONDITIONS.

REVISIONS		
03	2010–10–11	REVISED TITLE BLOCK
02	2010–10–08	UPDATED DRAWING NOTES
01	2008–11–04	MODIFIED DRAWING NOTES

2010–10–15 9:50am G:\2000DraftingandGIS\CADFiles\Drawings\PhaseIV_IFB\Erosion_Details_20081104.dwg Dan Tran

TransCanada
In business to deliver

PREPARED BY:
TROW ENGINEERING CONSULTANTS, INC.
2700 S. Post Oak Blvd., Suite 400
Houston, TX 77056
Phone: 1–713–693–6400
Fax: 1–713–693–6491
Trow

DESIGNER:			
JMP (NAME)	2008–09–08 (DATE)		
CHECKED BY: WSF	DESIGN CHECKER: RW	P7100	

KEYSTONE STEELE CITY (NPS 36 2011) PHILLIPS SECTION

FIA # 4359	CHAINAGE:	DISCIPLINE # 03

TITLE

DETAIL 4
EROSION CONTROL MATTING INSTALLATION

SCALE N.T.S.	DWG No 4359–03–ML–05–704	REV 03

TC_A4_BR.DWG 8.5X11

CADD DRAWING: DO NOT MAKE MANUAL REVISIONS

THESE ARE TYPICAL DRAWINGS; ACTUAL SITE CONDITIONS MAY VARY FROM THE SITE GRAPHICALLY REPRESENTED.

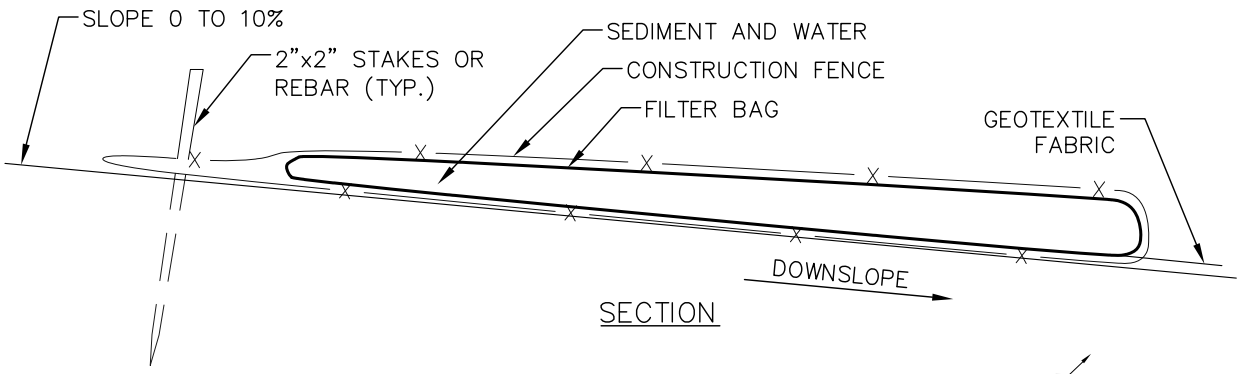

SECTION

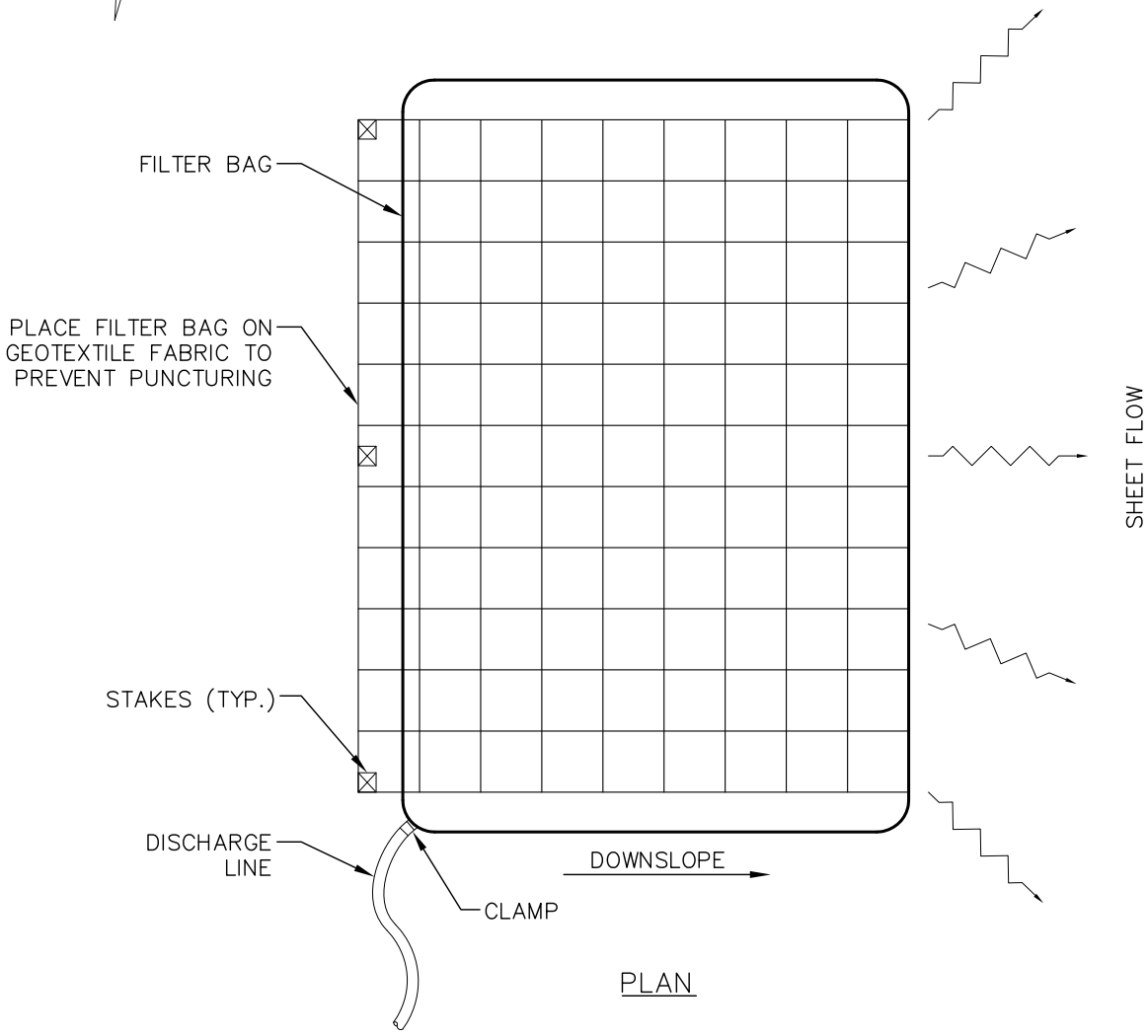

PLAN

NOTES:

1. MANUFACTURED NONWOVEN (FELT) FILTER BAGS ARE A SUITABLE ALTERNATIVE TO STRAW BALE STRUCTURES FOR TRENCH DEWATERING. FILTER BAGS SHALL BE INSTALLED AS SPECIFIED BY THE MANUFACTURER.
2. INSTALLATION SPECIFICATIONS TO BE MODIFIED AS NECESSARY TO SUIT ACTUAL SITE CONDITIONS.

REVISIONS		
01	2008-11-04	MODIFIED DRAWING NOTES
02	2010-10-11	REVISED TITLE BLOCK

2010-10-15 9:53am G:\2000DraftingandGIS\CADFiles\Drawings\PhaseIV_IFB\Erosion_Details_20081104.dwg Dan Tran

TransCanada
In business to deliver

PREPARED BY:
TROW ENGINEERING CONSULTANTS, INC.
2700 S. Post Oak Blvd., Suite 400
Houston, TX 77056
Phone: 1-713-693-6400
Fax: 1-713-693-6491
Trow

DESIGNER: JMP (NAME) 2008-09-08 (DATE)

CHECKED BY: WSF

DESIGN CHECKER: RW P7100

KEYSTONE STEELE CITY (NPS 36 2011) PHILLIPS SECTION

FIA # 4359 | CHAINAGE: | DISCIPLINE # 03

TITLE

DETAIL 5
TYPICAL DEWATERING FILTER BAG

SCALE N.T.S. | DWG No 4359-03-ML-05-705 | REV 02

TC_A4_BR.DWG 8.5X11

CADD DRAWING: DO NOT MAKE MANUAL REVISIONS

THESE ARE TYPICAL DRAWINGS; ACTUAL SITE CONDITIONS MAY VARY FROM THE SITE GRAPHICALLY REPRESENTED.

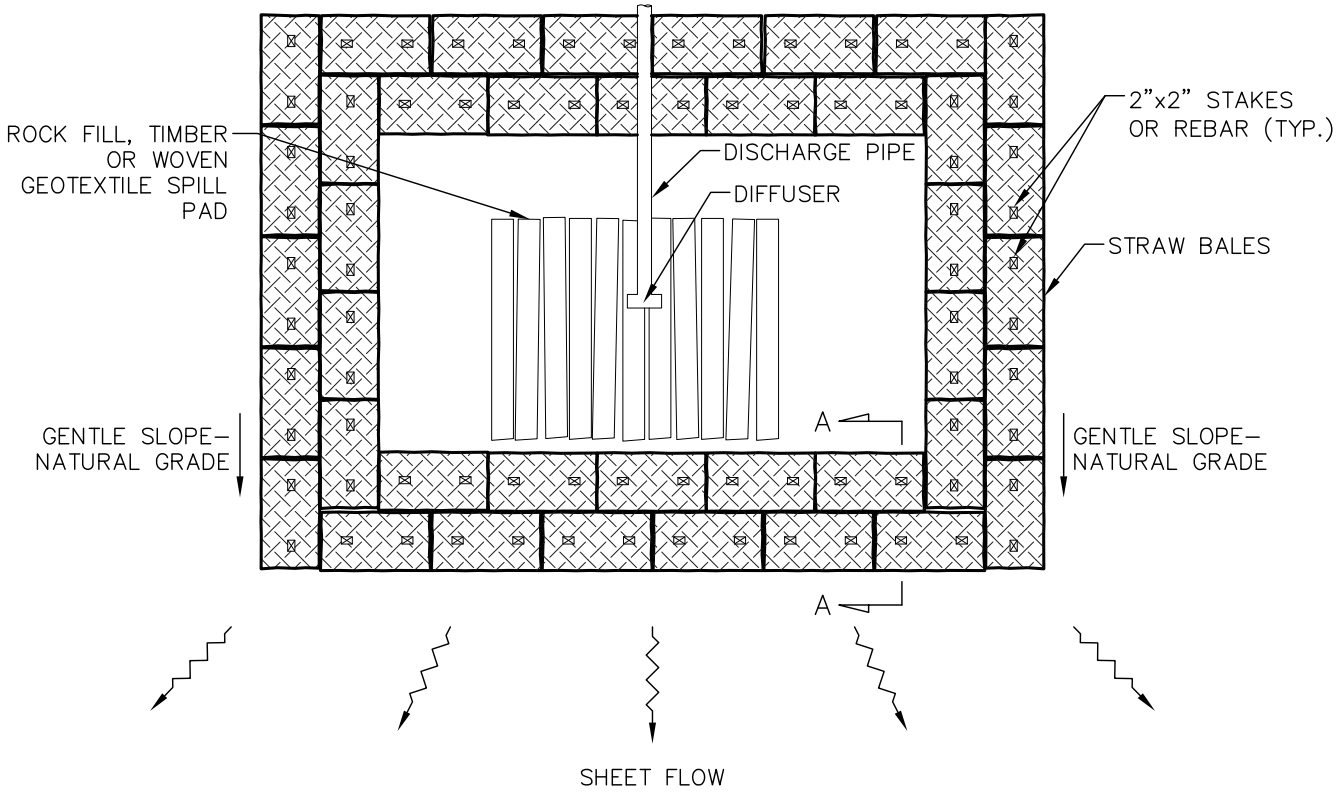

PLAN

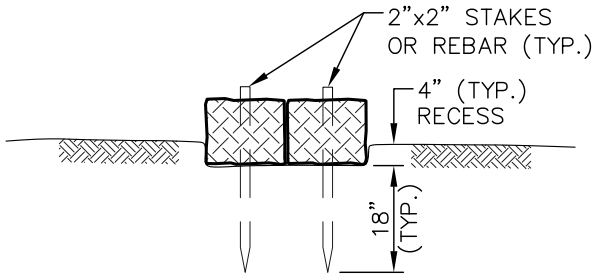

SECTION A–A

NOTES:

1. INSTALL A STRAW BALE DEWATERING STRUCTURE WHEREVER IT IS NECESSARY AND AS DIRECTED BY THE ENVIRONMENTAL INSPECTOR TO PREVENT THE FLOW OF HEAVILY SILT LADEN WATER INTO WATERBODIES OR WETLANDS.
2. DISCHARGE SITE SHOULD BE WELL VEGETATED AND LOCATED AT LEAST 50 FEET FROM ANY WATERBODY. THE TOPOGRAPHY OF THE SITE SHOULD BE SUCH THAT WATER WILL FLOW INTO THE DEWATERING STRUCTURE AND AWAY FROM ANY WORK AREAS. THE AREA DOWNSLOPE FROM THE DEWATERING SITE MUST BE REASONABLY FLAT OR STABILIZED BY VEGETATION OR OTHER MEANS TO ALLOW THE FILTERED WATER TO CONTINUE AS SHEET FLOW.
3. DIRECT THE PUMPED WATER ONTO A STABLE SPILL PAD CONSTRUCTED OF ROCKFILL, WEIGHTED TIMBERS, OR A WOVEN GEOTEXTILE STAKED TO THE GROUND SURFACE, SUCH AS MIRAFI 600X, TERRAFIX 400W, OR A COMPANY APPROVED EQUIVALENT. BEYOND THE SPILL PAD FORCE THE DISCHARGE WATER INTO SHEET FLOW USING STRAW BALES AND THE NATURAL TOPOGRAPHY.
4. DISCHARGE RATES SHOULD BE SUCH THAT THE CAPACITY OF THE STRUCTURE WILL NOT BE EXCEEDED.
5. DISCHARGE WATER SHALL BE FORCED INTO SHEET FLOW IMMEDIATELY BEYOND THE SPILL PAD USING A COMBINATION OF STRAW BALES AND THE NATURAL TOPOGRAPHY. RECESS STRAW BALES. DRIVE TWO (2) STAKES OR REBAR INTO EACH BALE TO ANCHOR THEM IN PLACE.
6. INSTALLATION SPECIFICATIONS TO BE MODIFIED AS NECESSARY TO SUIT ACTUAL SITE CONDITIONS.

REVISIONS			
03	2010–10–11	UPDATED DRAWING NOTES	Dan Tran
02	2010–10–08	UPDATED DRAWING NOTES	
01	2008–11–04	MODIFIED DRAWING NOTES	

2010–10–15 9:55am G:\2000DraftingandGIS\CADFiles\Drawings\PhaseIV_IFB\Erosion_Details_20081104.dwg

TransCanada
In business to deliver

PREPARED BY:
TROW ENGINEERING CONSULTANTS, INC.
2700 S. Post Oak Blvd., Suite 400
Houston, TX 77056
Phone: 1–713–693–6400
Fax: 1–713–693–6491
Trow

DESIGNER: JMP (NAME) 2008–09–08 (DATE)

CHECKED BY: WSF

DESIGN CHECKER: RW P7100

KEYSTONE STEELE CITY (NPS 36 2011) PHILLIPS SECTION

FIA # 4359 | CHAINAGE: | DISCIPLINE # 03

TITLE

DETAIL 6
TYPICAL STRAW BALE DEWATERING STRUCTURE

SCALE N.T.S. | DWG No 4359–03–ML–05–706 | REV 03

TC_A4_BR.DWG 8.5X11

CADD DRAWING: DO NOT MAKE MANUAL REVISIONS

THESE ARE TYPICAL DRAWINGS; ACTUAL SITE CONDITIONS MAY VARY FROM THE SITE GRAPHICALLY REPRESENTED.

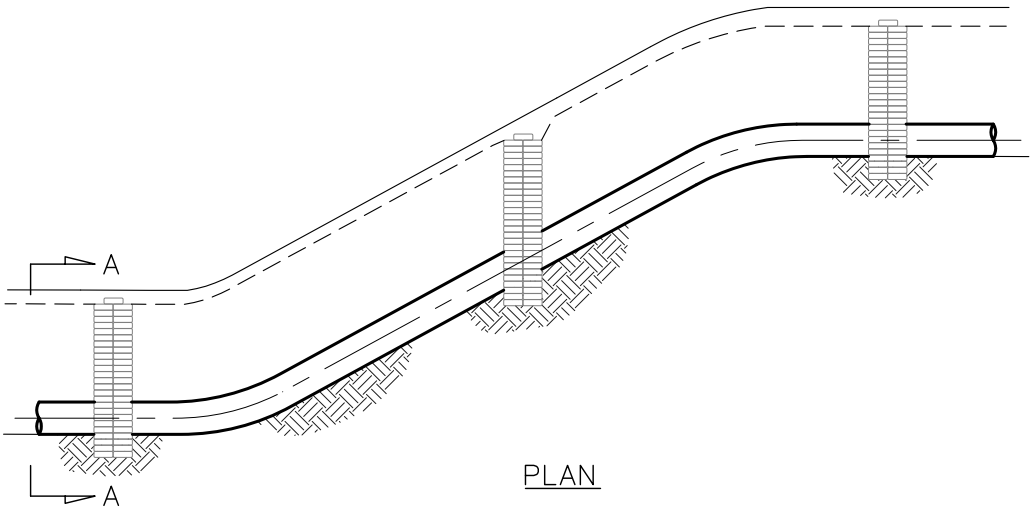

PLAN

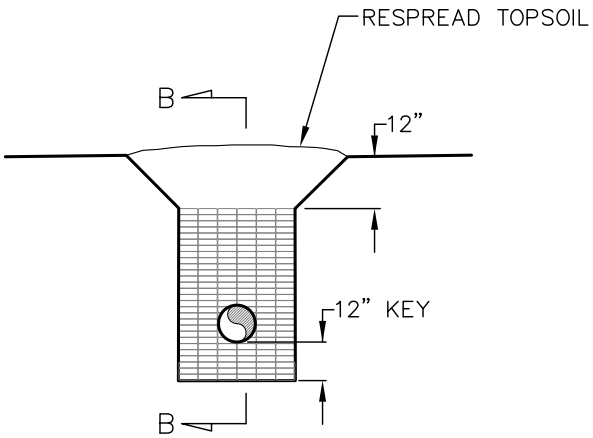

SECTION A–A

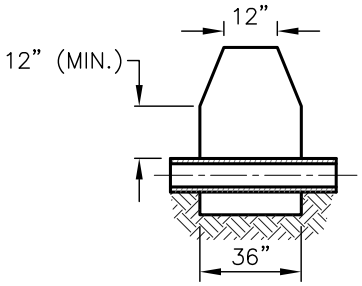

SECTION B–B

NOTES:

1. TRENCH BREAKERS TO BE INSTALLED AS SHOWN ON THE CONSTRUCTION DRAWINGS, WHERE DESCRIBED IN THE PLAN, AND AS DIRECTED.
2. OPEN WEAVE HEMP OR JUTE SACKS SHALL BE FILLED WITH AN AVERAGE 55 LBS. MIXTURE OF:
   1) ONE (1) PART CEMENT AND SIX (6) PARTS SAND OR SUBSOIL, OR
   2) ONE (1) PART CEMENT, THREE (3) PARTS FLYASH, AND FIVE (5) PARTS SAND OR SUBSOIL
   3) SAND WITH JUST SUFFICIENT WATER TO PERMIT MIXTURE TO EXUDE AND BOND SACKS TOGETHER. TOPSOIL IS NOT TO BE USED IN SACKS.
3. KEY EACH TRENCH BREAKER A MINIMUM OF ONE (1) FT. INTO BOTTOMS AND SIDES OF TRENCH.
4. FOAM TRENCH BREAKERS MAY BE USED IN LIEU OF SAND SACK TRENCH BREAKERS.
5. INSTALLATION SPECIFICATIONS TO BE MODIFIED AS NECESSARY TO SUIT ACTUAL SITE CONDITIONS.
6. TRENCH BREAKERS SHALL BE INSTALLED SUCH THAT THE TOP OF EACH DOWNSLOPE BREAKER IS ABOVE THE BOTTOM OF THE NEXT UPSLOPE BREAKER.

REVISIONS		
01	2008–11–04	UPDATED DRAWING NOTES
02	2010–10–11	UPDATED PLAN DETAIL

2010–10–15 9:55am G:\2000DraftingandGIS\CADFiles\Drawings\PhaseIV_IFB\Erosion_Details_20081104.dwg Dan Tran

TransCanada
In business to deliver

PREPARED BY:
TROW ENGINEERING CONSULTANTS, INC.
2700 S. Post Oak Blvd., Suite 400
Houston, TX 77056
Phone: 1–713–693–6400
Fax: 1–713–693–6491
Trow

DESIGNER: JMP (NAME) 2008–09–08 (DATE)

CHECKED BY: WSF

DESIGN CHECKER: RW P7100

KEYSTONE STEELE CITY (NPS 36 2011) PHILLIPS SECTION

FIA # 4359 | CHAINAGE: | DISCIPLINE # 03

TITLE

DETAIL 7
TYPICAL PERMANENT TRENCH BREAKER

SCALE N.T.S. | DWG No 4359–03–ML–05–707 | REV 02

TC_A4_BR.DWG 8.5X11

CADD DRAWING: DO NOT MAKE MANUAL REVISIONS

THESE ARE TYPICAL DRAWINGS; ACTUAL SITE CONDITIONS MAY VARY FROM THE SITE GRAPHICALLY REPRESENTED.

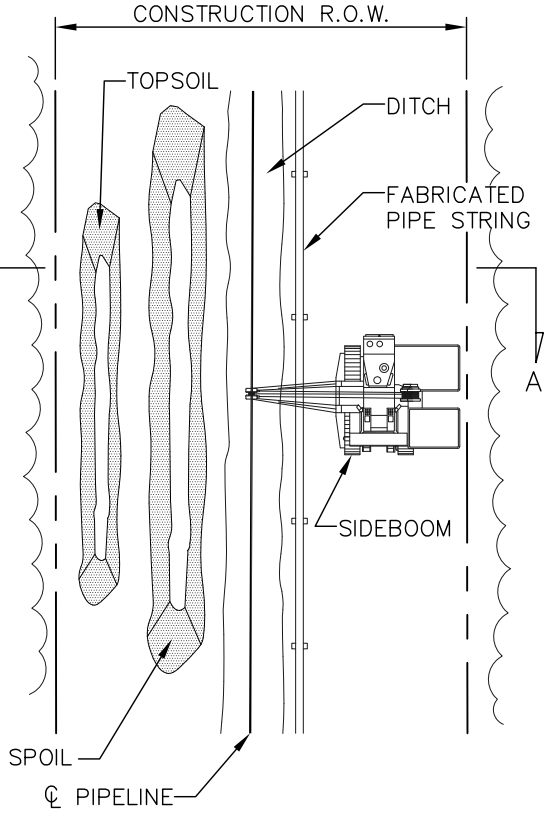

PLAN VIEW

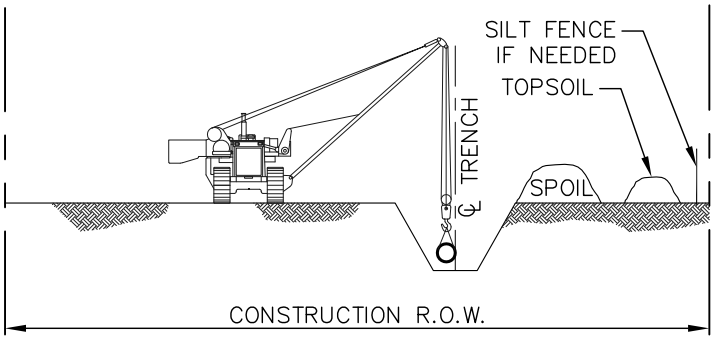

SECTION "A–A"

CONSTRUCTION PROCEDURES:

1. IF THE WETLAND IS BEING CULTIVATED AND FARMED, NO WETLAND CONSTRUCTION PROCEDURES ARE REQUIRED.
2. FLAG WETLAND BOUNDARIES PRIOR TO CLEARING.
3. NO REFUELING OF MOBILE EQUIPMENT IS ALLOWED WITHIN 100 FEET OF WETLAND. PLACE "NO FUELING" SIGN POSTS APPROXIMATELY 100 FEET BACK FROM WETLAND BOUNDARY. REFUEL STATIONARY EQUIPMENT AS PER THE PROJECT'S SPILL PREVENTION PROCEDURES.
4. INSTALL TEMPORARY SLOPE BREAKER UPSLOPE WITHIN 100 FEET OF WETLAND BOUNDARY IF DIRECTED BY THE PROJECT.
5. DO NOT TRENCH WETLAND UNTIL PIPE IS READY TO INSTALL.
6. CONSTRUCT WHEN DRY, IF POSSIBLE. IF SITE BECOMES WET AT TIME OF TRENCHING, AVOID SOIL COMPACTION BY UTILIZING TIMBER RIP–RAP OR PREFABRICATED EQUIPMENT MATS.
7. AVOID ADJACENT WETLANDS. INSTALL SEDIMENT BARRIERS (STRAW BALES AND/OR SILT FENCE) AT DOWN SLOPE EDGE OF RIGHT–OF–WAY ALONG WETLAND EDGE IF NEEDED TO CONTAIN SPOIL WITHIN RIGHT–OF–WAY.
8. RESTRICT ROOT GRUBBING TO ONLY THAT AREA OVER THE DITCHLINE AND REMOVE STUMPS FROM WETLAND FOR DISPOSAL.
9. CONDUCT TRENCH LINE TOPSOIL STRIPPING (IF TOPSOIL IS NOT SATURATED). SALVAGE TOPSOIL TO ACTUAL DEPTH OR A MAXIMUM DEPTH OF 12 INCHES.
10. TRENCH THROUGH WETLANDS.
11. PIPE SECTION TO BE FABRICATED WITHIN THE WETLAND AND ADJACENT TO ALIGNMENT, OR IN STAGING AREA OUTSIDE THE WETLAND AND WALKED IN.
12. LOWER–IN PIPE. PRIOR TO BACKFILLING TRENCH, IF REQUIRED, TRENCH PLUGS SHALL BE INSTALLED AS REQUIRED. BACKFILL TRENCH.
13. RESTORE GRADE TO NEAR PRE–CONSTRUCTION TOPOGRAPHY, REPLACE TOPSOIL AND INSTALL PERMANENT EROSION CONTROL.
14. IF UTILIZED, REMOVE TIMBER MATS OR PRE–FABRICATED MATS FROM WETLANDS UPON COMPLETION.
15. IN THE ABSENCE OF A DETAILED REVEGETATION PLANS, APPLY A TEMPORARY COVER CROP AS DIRECTED BY KEYSTONE.

REVISIONS		
01	REVISED NOTES 3 & 4	2010–10–15 10:08am G:\2000DraftingandGIS\CADFiles\Drawings\PhaseIV_IFB\Crossing_Details_20081104.dwg
02	2010–10–08 UPDATED DRAWING NOTES	
03	2010–10–11 UPDATED DRAWING NOTES	Dan Tran

TransCanada
In business to deliver

PREPARED BY:
TROW ENGINEERING CONSULTANTS, INC.
2700 S. Post Oak Blvd., Suite 400
Houston, TX 77056
Phone: 1–713–693–6400
Fax: 1–713–693–6491
Trow

DESIGNER: JMP (NAME) 2008–09–08 (DATE)

CHECKED BY: WSF

DESIGN CHECKER: RW P7100

KEYSTONE STEELE CITY (NPS 36 2011) PHILLIPS SECTION

FIA # 4359 | CHAINAGE: | DISCIPLINE # 03

TITLE

DETAIL 8
"DRY" WETLAND CROSSING METHOD

SCALE N.T.S. | DWG No 4359–03–ML–03–701 | REV 03

TC_A4_BR.DWG 8.5X11

CADD DRAWING: DO NOT MAKE MANUAL REVISIONS

THESE ARE TYPICAL DRAWINGS; ACTUAL SITE CONDITIONS MAY VARY FROM THE SITE GRAPHICALLY REPRESENTED.

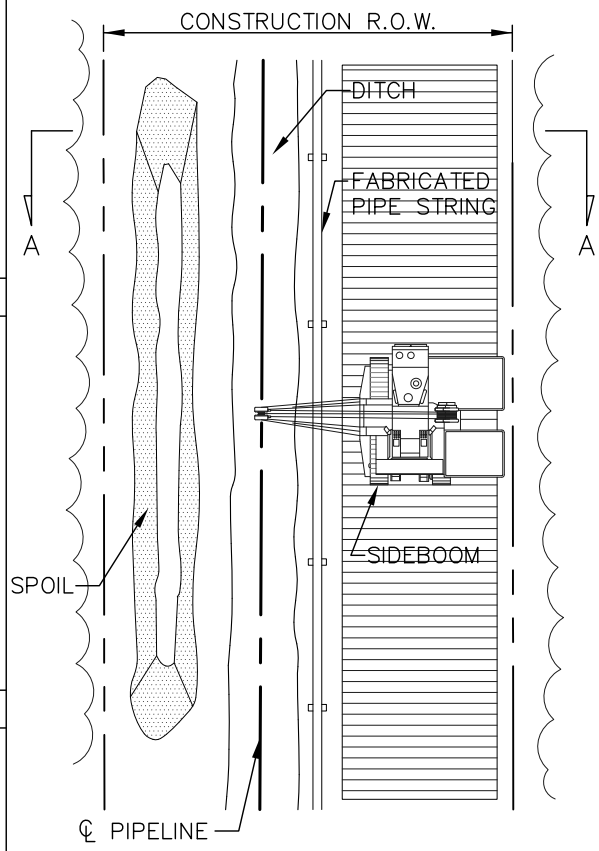

PLAN VIEW

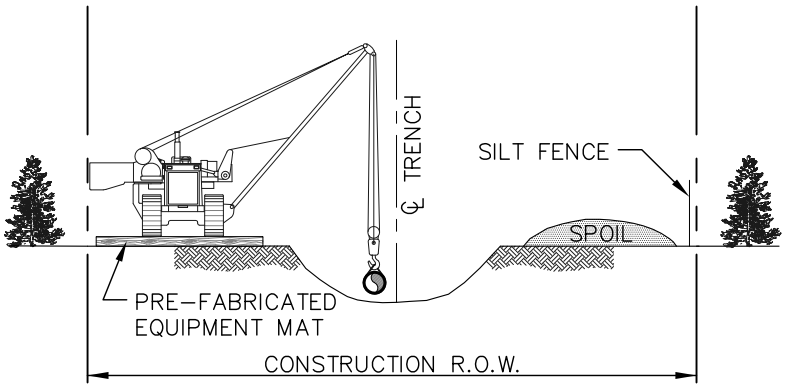

SECTION A–A

CONSTRUCTION PROCEDURES:

1. FLAG WETLAND BOUNDARIES PRIOR TO CLEARING.
2. NO REFUELING OF MOBILE EQUIPMENT IS ALLOWED WITHIN 100 FEET OF WETLAND. PLACE "NO FUELING" SIGN POSTS 100 FEET BACK FROM WETLAND BOUNDARY. REFUEL STATIONARY EQUIPMENT AS PER THE PROJECT'S SPILL PREVENTION PROCEDURES.
3. INSTALL TEMPORARY SLOPE BREAKER UPSLOPE WITHIN 100 FEET OF WETLAND BOUNDARY IF DIRECTED BY THE PROJECT.
4. INSTALL TIMBER MATS/RIPRAP THROUGH ENTIRE WETLAND AREA. EQUIPMENT NECESSARY FOR RIGHT-OF-WAY CLEARING MAY MAKE ONE (1) PASS THROUGH THE WETLAND BEFORE MATS ARE INSTALLED.
5. AVOID ADJACENT WETLANDS. INSTALL SEDIMENT BARRIERS (STRAW BALES AND/OR SILT FENCE) AT DOWNSLOPE EDGE OF RIGHT-OF-WAY AND ALONG WETLAND EDGE AS REQUIRED.
6. RESTRICT ROOT GRUBBING TO ONLY THAT AREA OVER THE DITCHLINE AND DITCH SPOIL AREAS AND REMOVED FROM WETLAND FOR DISPOSAL.
7. DO NOT TRENCH WETLAND UNTIL PIPE IS READY TO INSTALL.
8. TOPSOIL STRIPPING SHALL NOT BE REQUIRED IN SATURATED SOIL CONDITIONS.
9. LEAVE HARD PLUGS AT EDGE OF WETLAND UNTIL JUST PRIOR TO TRENCHING.
10. PIPE SECTION MAY BE FABRICATED WITHIN THE WETLAND AND ADJACENT TO ALIGNMENT, OR IN STAGING AREA OUTSIDE THE WETLAND AND WALKED IN.
11. TRENCH THROUGH WETLANDS.
12. LOWER-IN PIPE, INSTALL TRENCH PLUGS AT WETLAND EDGES AS REQUIRED AND BACKFILL IMMEDIATELY.
13. REMOVE TIMBER MATS OR PRE-FABRICATED MATS FROM WETLAND UPON COMPLETION.
14. RESTORE GRADE TO NEAR PRE-CONSTRUCTION TOPOGRAPHY, REPLACE TOPSOIL IF SALVAGED AND INSTALL PERMANENT EROSION CONTROL.

REVISIONS | 01 | REVISED NOTES 2 & 3 | 02 | 2010-10-11 UPDATED DRAWING NOTES

2010-10-15 10:09am G:\2000DraftingandGIS\CADFiles\Drawings\PhaseIV_IFB\Crossing_Details_20081104.dwg Dan Tran

TransCanada
In business to deliver

PREPARED BY:
TROW ENGINEERING CONSULTANTS, INC.
2700 S. Post Oak Blvd., Suite 400
Houston, TX 77056
Phone: 1-713-693-6400
Fax: 1-713-693-6491
Trow

DESIGNER:		KEYSTONE STEELE CITY (NPS 36 2011) PHILLIPS SECTION		
JMP (NAME)	2008-09-08 (DATE)	FIA # 4359	CHAINAGE:	DISCIPLINE # 03
CHECKED BY: WSF	DESIGN CHECKER: RW P7100	TITLE: DETAIL 9 STANDARD WETLAND CROSSING METHOD		
		SCALE N.T.S.	DWG No 4359-03-ML-03-702	REV 02

TC_A4_BR.DWG 8.5X11

CADD DRAWING: DO NOT MAKE MANUAL REVISIONS

THESE ARE TYPICAL DRAWINGS; ACTUAL SITE CONDITIONS MAY VARY FROM THE SITE GRAPHICALLY REPRESENTED.

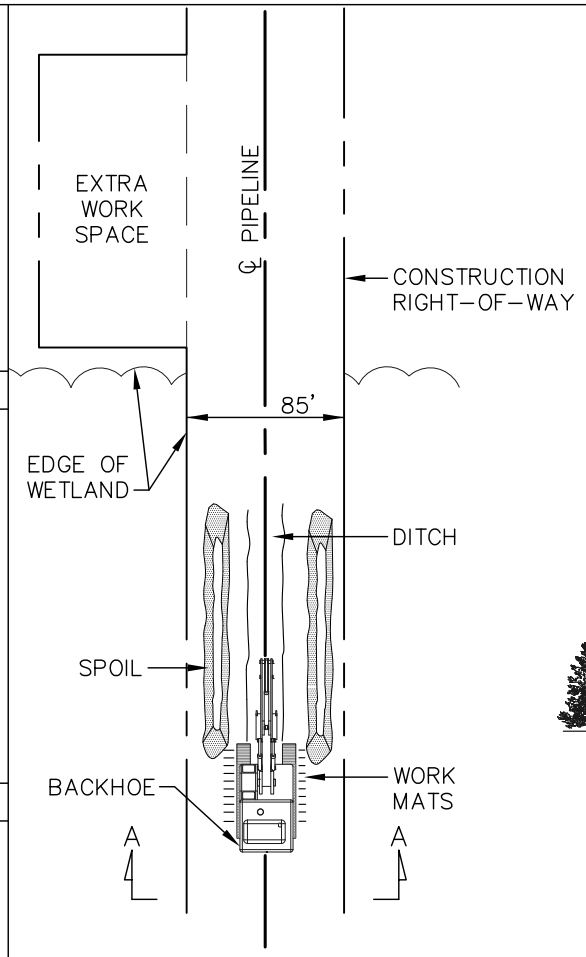

PLAN VIEW

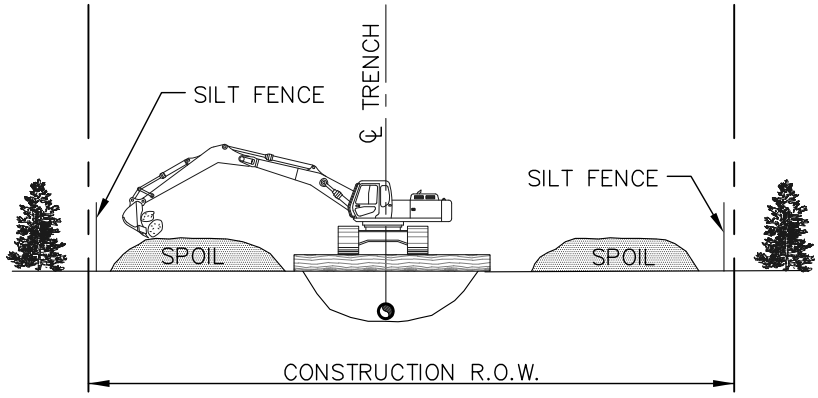

SECTION A–A

CONSTRUCTION PROCEDURES:

1. FLAG WETLAND BOUNDARIES PRIOR TO CLEARING.
2. NO REFUELING OF MOBILE EQUIPMENT IS ALLOWED WITHIN 100 FEET OF WETLAND. PLACE "NO FUELING" SIGN POSTS 100 FEET BACK FROM WETLAND BOUNDARY. REFUEL STATIONARY EQUIPMENT AS PER THE PROJECT'S SPILL PREVENTION PROCEDURES.
3. INSTALL TEMPORARY SLOPE BREAKER UPSLOPE WITHIN 100 FEET OF WETLAND BOUNDARY AS DIRECTED BY THE PROJECT.
4. RESTRICT ROOT GRUBBING TO ONLY THE AREA OVER THE DITCHLINE.
5. DO NOT TRENCH WETLAND UNTIL PIPE IS READY TO INSTALL.
6. TOPSOIL STRIPPING SHALL NOT BE REQUIRED IN SATURATED SOIL CONDITIONS.
7. UTILIZE AMPHIBIOUS EXCAVATORS (PONTOON MOUNTED BACKHOES) OR TRACKED BACKHOES SUPPORTED BY FABRICATED TIMBER MATS OR FLOATS TO EXCAVATE TRENCH. IF FABRICATED TIMBER MATS ARE USED FOR STABILIZATION, THE BACKHOE SHALL GRADUALLY MOVE ACROSS THE WETLAND BY MOVING THE MAT FROM IMMEDIATELY BEHIND TO IMMEDIATELY IN FRONT OF THE BACKHOE'S PATH.
8. AVOID ADJACENT WETLANDS. INSTALL SEDIMENT BARRIERS (STRAW BALES AND/OR SILT FENCE) AT EDGE OF RIGHT–OF–WAY AND ALONG WETLAND EDGE IF PRACTICAL.
9. FABRICATE PIPE IN STAGING AREA OUTSIDE THE WETLAND IN THE EXTRA WORK SPACE AS INDICATED ON THE CONSTRUCTION DRAWINGS.
10. LEAVE HARD PLUGS AT THE EDGE OF THE WETLAND UNTIL JUST PRIOR TO PIPE PLACEMENT.
11. FLOAT PIPE IN PLACE, LOWER–IN, INSTALL TRENCH PLUGS AT WETLAND EDGES WHERE REQUIRED AND BACKFILL IMMEDIATELY.
12. REMOVE TIMBER MATS OR PRE–FABRICATED MATS OF NON–NATIVE MATERIAL FROM WETLANDS UPON COMPLETION.
13. RESTORE GRADE TO NEAR PRE–CONSTRUCTION TOPOGRAPHY AND INSTALL PERMANENT EROSION CONTROL.
14. THE CONSTRUCTION RIGHT–OF–WAY FOR THIS TYPE OF CONSTRUCTION SHALL BE 85 FEET.

REVISIONS		
01	REVISED NOTES 2, 3 & 13	2010–10–11 UPDATED DRAWING NOTES
02		

2010–10–15 10:10am G:\2000DraftingandGIS\CADFiles\Drawings\PhaseIV_IFB\Crossing_Details_20081104.dwg Dan Tran

TransCanada
In business to deliver

PREPARED BY:
TROW ENGINEERING CONSULTANTS, INC.
2700 S. Post Oak Blvd., Suite 400
Houston, TX 77056
Phone: 1–713–693–6400
Fax: 1–713–693–6491
Trow

DESIGNER: JMP (NAME) 2008–09–08 (DATE)

CHECKED BY: WSF

DESIGN CHECKER: RW

P7100

KEYSTONE STEELE CITY (NPS 36 2011) PHILLIPS SECTION

FIA # 4359 | CHAINAGE: | DISCIPLINE # 03

TITLE

DETAIL 10
PUSH/PULL WETLAND CROSSING METHOD

SCALE N.T.S. | DWG No 4359–03–ML–03–703 | REV 02

TC_A4_BR.DWG 8.5X11

CADD DRAWING: DO NOT MAKE MANUAL REVISIONS

THESE ARE TYPICAL DRAWINGS; ACTUAL SITE CONDITIONS MAY VARY FROM THE SITE GRAPHICALLY REPRESENTED.

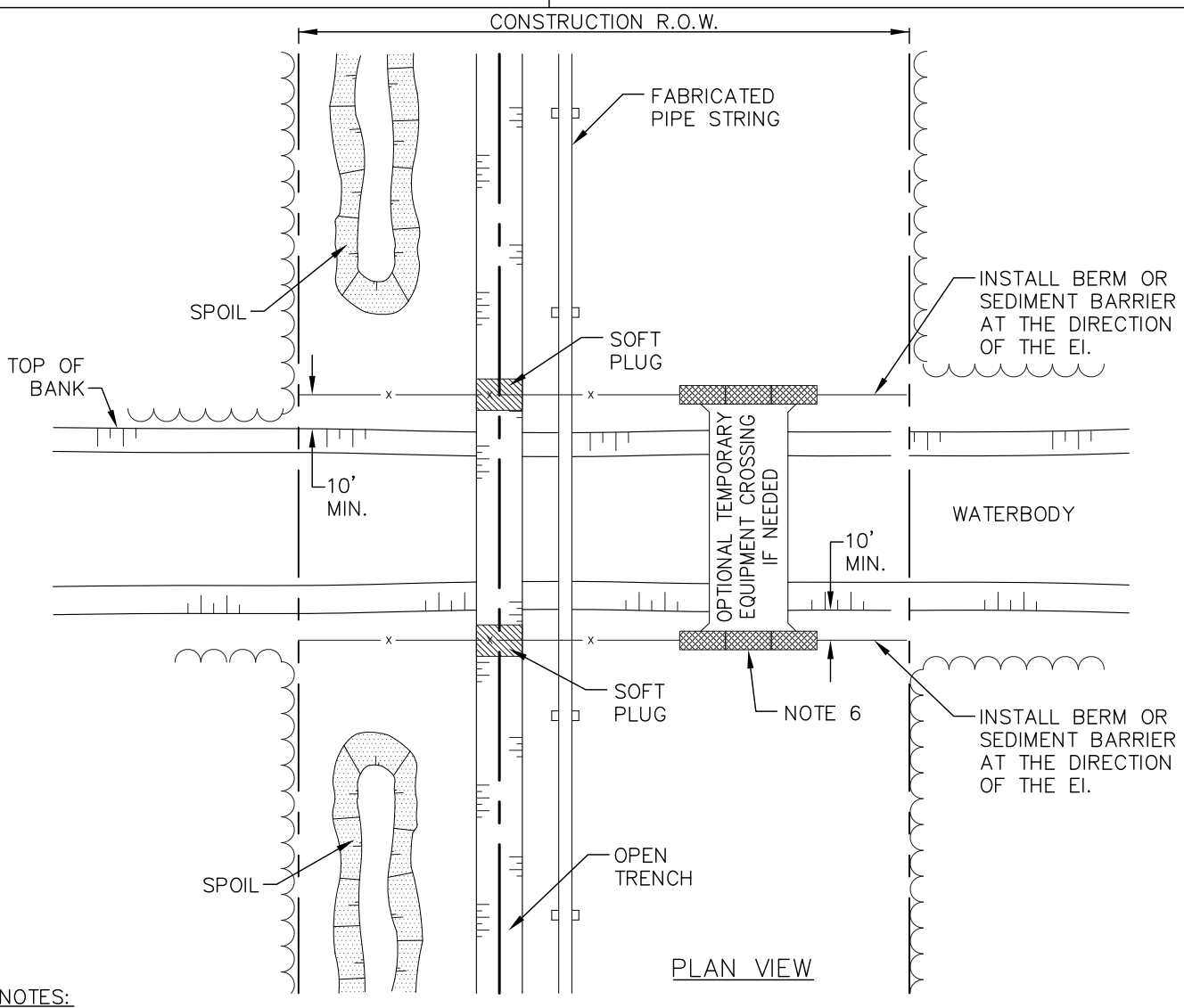

NOTES:

1. THIS METHOD APPLIES TO DRY WASHES, SWALES, INCISED DRAINAGES AND DITCHES WITH NO PERCEPTIBLE FLOW AT TIME OF CROSSING. IF FLOWS ARE PRESENT DURING CONSTRUCTION REFER TO DETAIL 12. CLEARING AND GRADING, TOPSOIL SALVAGE AND TOPSOIL STRIPPING DEPTHS SHALL BE THE SAME AS INDICATED FOR ADJACENT UPLAND UNLESS OTHERWISE DIRECTED BY KEYSTONE.
2. EI TO FLAG THE ORDINARY HIGH WATER MARK (OHWM) PRIOR TO CLEARING.
3. INSTALL SILT FENCE OR A BERM AT DIRECTION OF KEYSTONE EI TO PREVENT RUNOFF FROM ROW TO ADJACENT, UNDISTURBED DRAINAGE.
4. STOCKPILE TOPSOIL AND SPOIL SEPARATELY. TOPSOIL SHALL NOT BE STOCKPILED ACROSS THE DRAINAGE CHANNEL AND SHALL BE PLACED A MINIMUM OF 15 FEET FROM THE OHWM OR TO SUIT CONDITIONS AND PROTECT THE DRAINAGE AS DETERMINED BY KEYSTONE.
5. INSTALL TEMPORARY SLOPE BREAKERS WHERE IDENTIFIED BY THE EI.
6. TRENCH, STRING PIPE, AND BACKFILL USING STANDARD UPLAND CONSTRUCTION PROCEDURES UNLESS OTHERWISE DIRECTED BY KEYSTONE.
7. RESTORE WATERCOURSE CHANNEL AND BANKS (EXCEPT TRAVEL LANE IF USED) TO APPROXIMATE PRE-CONSTRUCTION PROFILE IMMEDIATELY AFTER PIPE IS LOWERED IN AND BACKFILLED. INSTALL PERMANENT EROSION CONTROLS WHERE DIRECTED BY KEYSTONE.
8. REMOVE ANY TEMPORARY CROSSING STRUCTURES AND/OR GRAVEL.

REVISIONS	UPDATED DRAWING NOTES	2010-10-08 UPDATED DRAWING NOTES	2010-10-11 UPDATED DRAWING NOTES
01	02	03	

2010-10-15 10:12am G:\2000DraftingandGIS\CADFiles\Drawings\PhaseIV_IFB\Crossing_Details_20081104.dwg Dan Tran

TransCanada
In business to deliver

PREPARED BY:
TROW ENGINEERING CONSULTANTS, INC.
2700 S. Post Oak Blvd., Suite 400
Houston, TX 77056
Phone: 1-713-693-6400
Fax: 1-713-693-6491
Trow

DESIGNER: JMP (NAME) 2008-09-08 (DATE)

CHECKED BY: WSF

DESIGN CHECKER: RW P7100

KEYSTONE STEELE CITY (NPS 36 2011) PHILLIPS SECTION

FIA # 4359 | CHAINAGE: | DISCIPLINE # 03

TITLE
DETAIL 11
TYPICAL OPEN CUT WET CROSSING METHOD
NON-FLOWING WATERBODY

SCALE N.T.S. | DWG No 4359-03-ML-03-704 | REV 03

TC_A4_BR.DWG 8.5X11

CADD DRAWING: DO NOT MAKE MANUAL REVISIONS

THESE ARE TYPICAL DRAWINGS; ACTUAL SITE CONDITIONS MAY VARY FROM THE SITE GRAPHICALLY REPRESENTED.

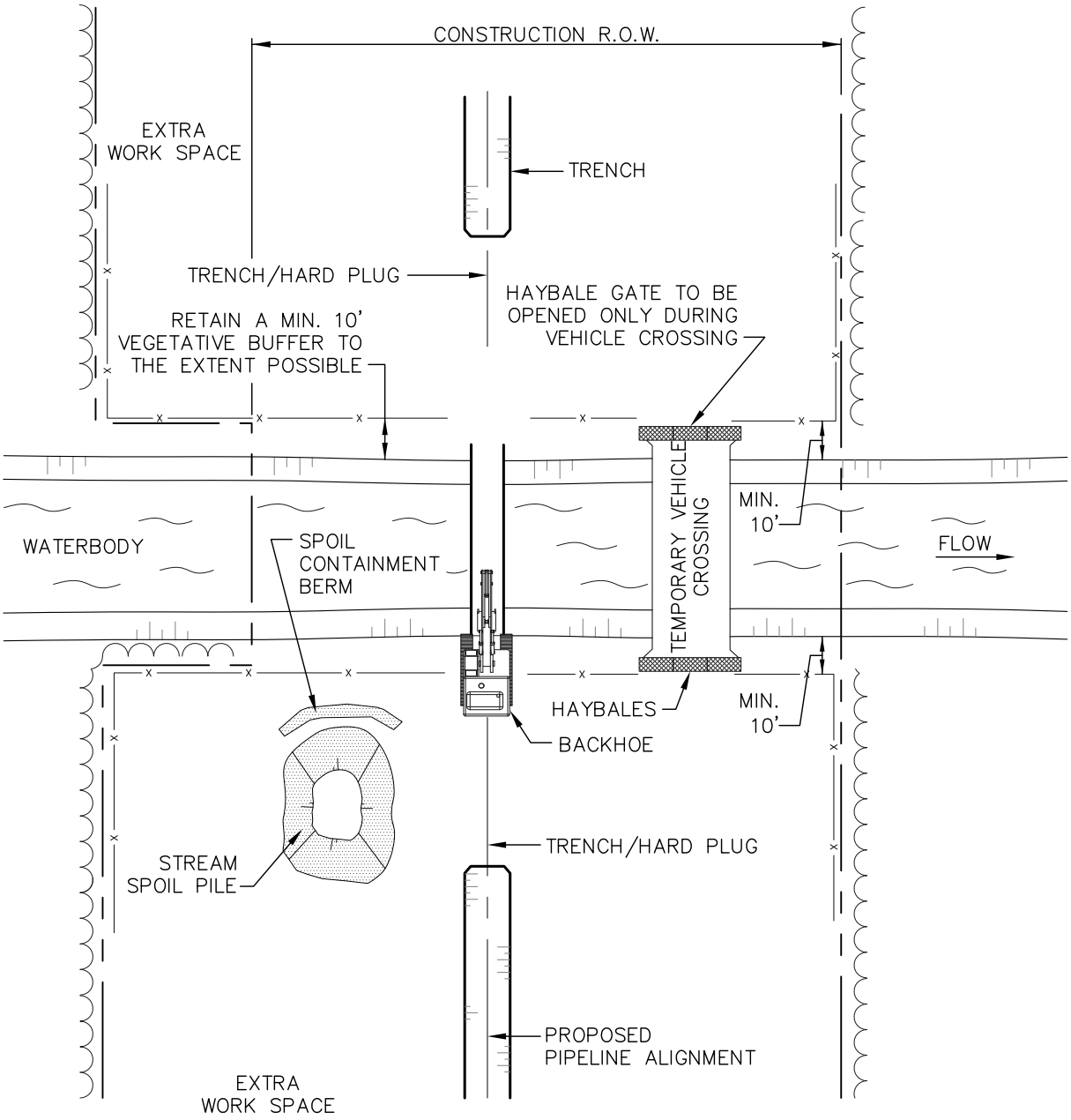

PLAN VIEW

REVISIONS		
01	UPDATED DRAWING NOTES	2010-10-15 10:14am G:\2000DraftingandGIS\CADFiles\Drawings\PhaseIV_IFB\Crossing_Details_20081104.dwg Dan Tran
02	2010-10-11 REVISED TITLE BLOCK	

TransCanada
In business to deliver

PREPARED BY:
TROW ENGINEERING CONSULTANTS, INC.
2700 S. Post Oak Blvd., Suite 400
Houston, TX 77056
Phone: 1-713-693-6400
Fax: 1-713-693-6491
Trow

DESIGNER: JMP (NAME) 2008-09-08 (DATE)

CHECKED BY: WSF

DESIGN CHECKER: RW P7100

KEYSTONE STEELE CITY (NPS 36 2011) PHILLIPS SECTION

FIA # 4359 | CHAINAGE: | DISCIPLINE # 03

TITLE
DETAIL 12
TYPICAL OPEN CUT WET CROSSING METHOD
FLOWING WATERBODY

SCALE N.T.S. | DWG No 4359-03-ML-03-705 | REV 02

TC_A4_BR.DWG 8.5X11

CADD DRAWING: DO NOT MAKE MANUAL REVISIONS

THESE ARE TYPICAL DRAWINGS; ACTUAL SITE CONDITIONS MAY VARY FROM THE SITE GRAPHICALLY REPRESENTED.

CONSTRUCTION PROCEDURES:

1. RIGHT-OF-WAY BOUNDARIES AND WORK SPACE LIMITS SHALL BE CLEARLY DELINEATED. STAGING FOR MAKEUP SHALL BE LOCATED A MINIMUM OF 10 FEET FROM WATERBODY.

2. CLEARING LIMITS WILL BE CLEARLY DELINEATED AND 10 FOOT VEGETATIVE BUFFER STRIP BETWEEN DISTURBED AREA AND THE WATERBODY SHALL BE MAINTAINED TO THE EXTENT POSSIBLE. ALL CLEARING SHALL BE MINIMIZED TO THE EXTENT POSSIBLE AND TO ONLY THAT NECESSARY FOR CONSTRUCTION. WOODY VEGETATION SHALL BE CUT AT GROUND LEVEL AND THE STUMPS/ROOTS LEFT IN PLACE TO THE EXTENT POSSIBLE.

3. TOPSOIL SHALL BE STRIPPED FROM THE DITCH LINE IN ALL WETLANDS RIPARIAN.

4. CONTRACTOR SHALL INSTALL SIGNS APPROXIMATELY 100 FEET MINIMUM FROM EACH WATERBODY AND WETLAND TO IDENTIFY THE HAZARDOUS MATERIALS EXCLUSION AREA.

5. EROSION AND SEDIMENT CONTROL
   a. CONTRACTOR SHALL SUPPLY, INSTALL AND MAINTAIN SEDIMENT CONTROL STRUCTURES, AS DEPICTED OR ALONG DOWN GRADIENT SIDES OF WORK AREAS AND STAGING AREAS SUCH THAT NO HEAVILY SILT LADEN WATER ENTERS WATERBODY OR WETLAND.

   b. NO HEAVILY SILT LADEN WATER SHALL BE DISCHARGED DIRECTLY OR INDIRECTLY INTO THE WATERBODY. ALL EROSION AND SEDIMENT CONTROL STRUCTURE LOCATIONS AS DEPICTED ARE APPROXIMATE AND MAY BE ADJUSTED AS DIRECTED BY THE COMPANY INSPECTOR TO SUIT ACTUAL SITE CONDITIONS. SILT FENCE OR STRAW BALE INSTALLATIONS SHALL INCLUDE REMOVABLE SECTIONS TO FACILITATE ACCESS DURING CONSTRUCTION.

   c. SEDIMENT LADEN WATER FROM TRENCH DEWATERING SHALL BE DISCHARGED TO A WELL VEGETATED UPLAND AREA INTO A STRAW BALE DEWATERING STRUCTURE OR GEOTEXTILE FILTER BAG. SEDIMENT CONTROL STRUCTURES MUST BE IN PLACE AT ALL TIMES ACROSS THE DISTURBED CONSTRUCTION RIGHT-OF-WAY EXCEPT DURING EXCAVATION/INSTALLATION OF THE CROSSING PIPE.

   d. SOFT DITCH PLUGS MUST REMAIN IN PLACE AT CONVENIENT LOCATIONS TO SEPARATE MAINLINE DITCH FROM THE WATERBODY CROSSING UNTIL THE WATER CROSSING IS INSTALLED AND BACKFILLED.

   e. TRENCH BREAKERS ARE TO BE INSTALLED AT THE SAME SPACING AND IMMEDIATELY UPSLOPE OF PERMANENT SLOPE BREAKERS, OR AS DIRECTED BY THE COMPANY.

6. CONTRACTOR SHALL MAINTAIN HARD PLUGS IN THE DITCH AT THE WATERBODY UNTIL JUST PRIOR TO PIPE INSTALLATION. CONTRACTOR SHALL EXCAVATE TRENCH AND INSTALL PIPE AS EXPEDIENTLY AS PRACTICAL TO REDUCE THE DURATION OF WORK ACTIVITIES IN THE WATERBODY BED.

7. CONTRACTOR SHALL PLACE TRENCH SPOIL ONLY IN CERTIFICATED WORK SPACE AND A MINIMUM OF 10 FEET FROM THE WATERBODY BANKS TO PREVENT ENTRY OF SPOIL INTO THE WATERBODY. SPOIL SHALL BE CONTAINED AS NECESSARY USING EITHER A STRAW BALE BARRIER OR AN EARTH/ROCK BERM.

8. CONTRACTOR SHALL RESTORE THE WATERBODY AND BANKS TO APPROXIMATE PRE-CONSTRUCTION CONTOURS, UNLESS OTHERWISE APPROVED BY THE COMPANY. CONTRACTOR SHALL INSTALL PERMANENT EROSION AND SEDIMENT CONTROL STRUCTURES AS INDICATED. ANY MATERIALS PLACED IN THE WATERBODY TO FACILITATE CONSTRUCTION SHALL BE REMOVED DURING RESTORATION. BANKS SHALL BE STABILIZED AND TEMPORARY SEDIMENT BARRIERS INSTALLED AS SOON AS POSSIBLE AFTER CROSSING, BUT WITHIN 24 HOURS OF COMPLETING THE CROSSING. MAINTAIN A SILT FENCE OR STRAW BALE BARRIER ALONG THE WATERBODY AND WETLAND BOUNDARIES UNTIL VEGETATION IS ESTABLISHED IN ADJACENT DISTURBED AREAS.

9. VEHICLE CROSSING CAN BE CONSTRUCTED USING EITHER A FLUME CROSSING OR A TEMPORARY BRIDGE. VEHICLE CROSSING ONLY REQUIRED IF STREAM SUPPORTS A STATE DESIGNATED FISHERY.

2010-10-15 10:15am G:\2000DraftingandGIS\CADFiles\Drawings\PhaseIV_IFB\Crossing_Details_20081104.dwg Dan Tran

REVISIONS 01 2010-10-11 REVISED TITLE BLOCK

TransCanada
In business to deliver

PREPARED BY:
TROW ENGINEERING CONSULTANTS, INC.
2700 S. Post Oak Blvd., Suite 400
Houston, TX 77056
Phone: 1-713-693-6400
Fax: 1-713-693-6491
Trow

DESIGNER: JMP (NAME) 2008-09-08 (DATE)
CHECKED BY: WSF
DESIGN CHECKER: RW P7100

KEYSTONE STEELE CITY (NPS 36 2011) PHILLIPS SECTION
FIA # 4359 | CHAINAGE: | DISCIPLINE # 03
TITLE
DETAIL 12A
TYPICAL OPEN CUT WET CROSSING METHOD
FLOWING WATERBODY – CONSTRUCTION PROCEDURES
SCALE N.T.S. | DWG No 4359-03-ML-03-706 | REV 01

TC_A4_BR.DWG 8.5X11

CADD DRAWING: DO NOT MAKE MANUAL REVISIONS

THESE ARE TYPICAL DRAWINGS; ACTUAL SITE CONDITIONS MAY VARY FROM THE SITE GRAPHICALLY REPRESENTED.

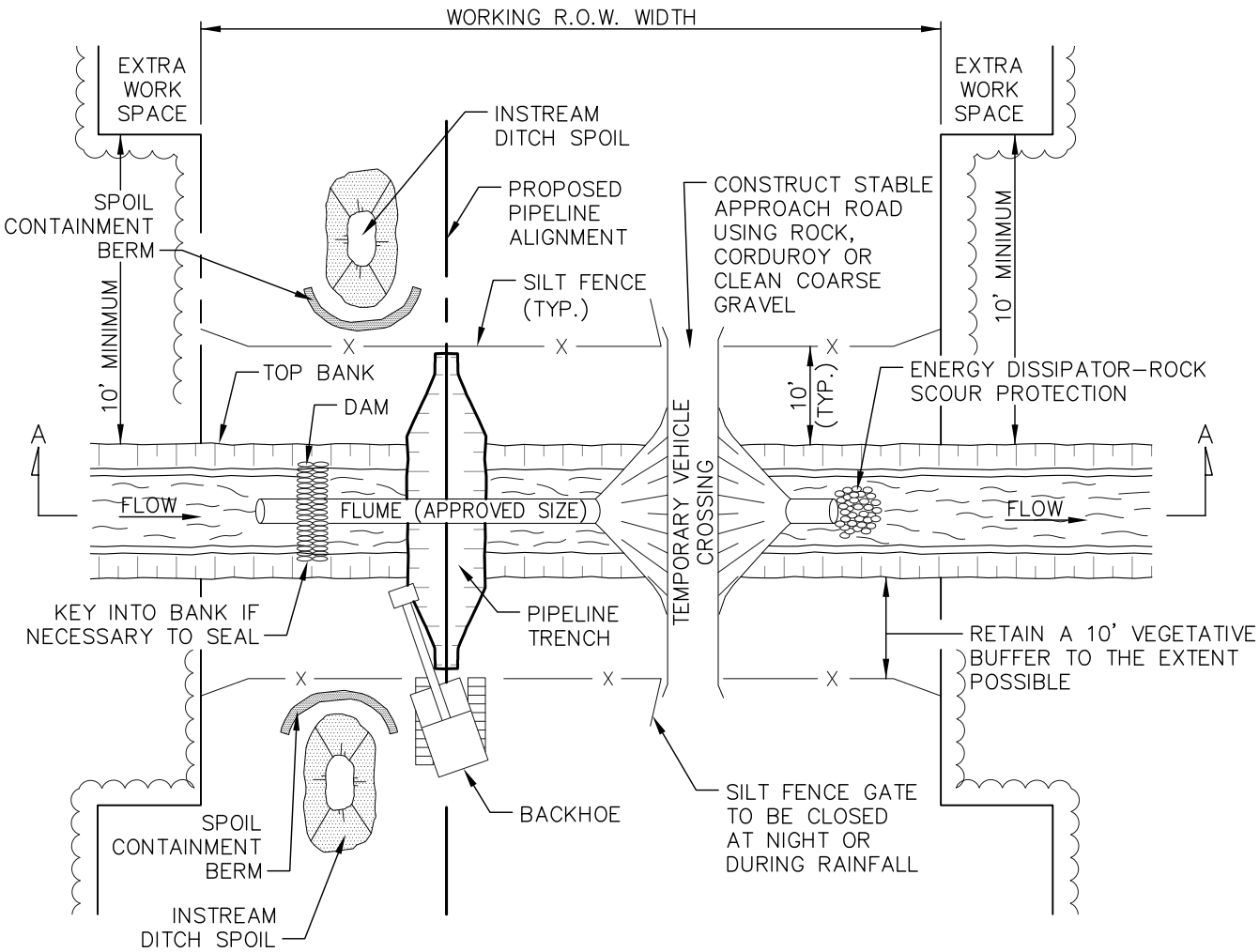

PLAN VIEW

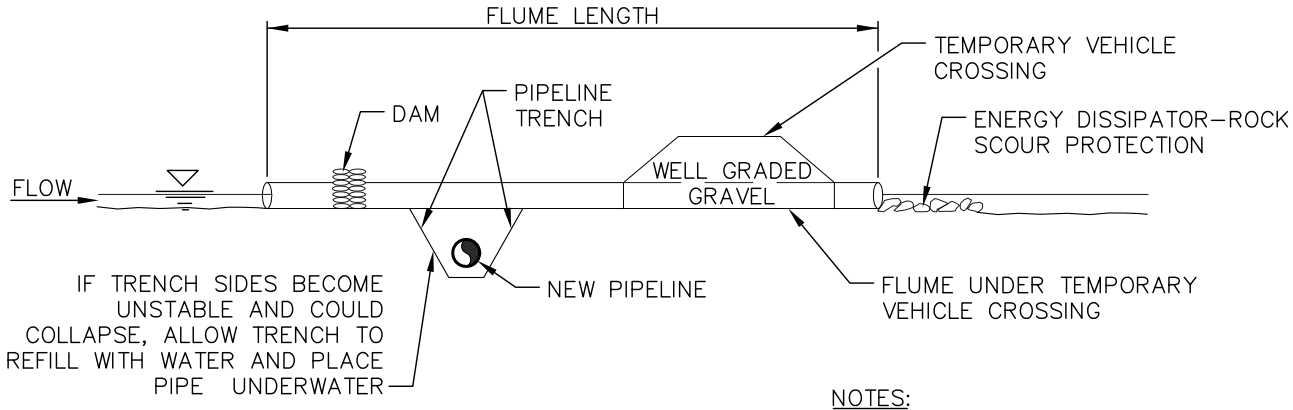

SECTION A–A

NOTES:

1. PIPELINE PLACEMENT WITHIN RIGHT–OF–WAY CONCEPTUAL ONLY.
2. SEE DETAIL 13A FOR CONSTRUCTION PROCEDURES.

REVISIONS 01 2010–10–11 REVISED TITLE BLOCK

2010–10–15 10:16am G:\2000DraftingandGIS\CADFiles\Drawings\PhaseIV_IFB\Crossing_Details_20081104.dwg Dan Tran

TransCanada
In business to deliver

PREPARED BY:
TROW ENGINEERING CONSULTANTS, INC.
2700 S. Post Oak Blvd., Suite 400
Houston, TX 77056
Phone: 1–713–693–6400
Fax: 1–713–693–6491
Trow

DESIGNER: JMP (NAME) 2008–09–08 (DATE)

CHECKED BY: WSF

DESIGN CHECKER: RW P7100

KEYSTONE STEELE CITY (NPS 36 2011) PHILLIPS SECTION

FIA # 4359 | CHAINAGE: | DISCIPLINE # 03

TITLE
DETAIL 13
TYPICAL DRY FLUME CROSSING METHOD

SCALE N.T.S. | DWG No 4359–03–ML–03–707 | REV 01

TC_A4_BR.DWG 8.5X11

CADD DRAWING: DO NOT MAKE MANUAL REVISIONS

THESE ARE TYPICAL DRAWINGS; ACTUAL SITE CONDITIONS MAY VARY FROM THE SITE GRAPHICALLY REPRESENTED.

CONSTRUCTION PROCEDURES:

1. MARK OUT AND MAINTAIN LIMITS OF AUTHORIZED WORK AREAS WITH FENCING OR FLAGGING TAPE TO AVOID UNNECESSARY DISTURBANCE OF VEGETATION. ENSURE EQUIPMENT OPERATORS WORKING ON THE CROSSING HAVE BEEN BRIEFED ABOUT THIS PLAN AND THE MEASURE NEEDED TO PROTECT WATER QUALITY.
2. ALL NECESSARY EQUIPMENT AND MATERIALS TO BUILD THE FLUME MUST BE ON-SITE OR READILY AVAILABLE PRIOR TO COMMENCING IN-WATER WORK.
3. TO THE EXTENT POSSIBLE, MAINTAIN A MINIMUM 10 FT. VEGETATIVE BUFFER STRIP BETWEEN DISTURBED AREAS AND THE WATERCOURSE. INSTALL AND MAINTAIN A SILT FENCE OR STRAW BALE BARRIER UPSLOPE OF THE BUFFER STRIP ON EACH SIDE OF THE WATERCOURSE.
4. CONTRACTOR SHALL SUPPLY, INSTALL AND MAINTAIN SEDIMENT CONTROL STRUCTURES, AS DEPICTED OR ALONG DOWN GRADIENT SIDES OF WORK AREAS AND STAGING AREAS SUCH THAT NO HEAVILY SILT LADEN WATER ENTERS STREAM.
   a. NO HEAVILY SILT LADEN WATER SHALL BE DISCHARGED DIRECTLY INTO THE STREAM.
   b. EROSION AND SEDIMENT CONTROL STRUCTURE LOCATIONS AS DEPICTED ARE APPROXIMATE AND MAY BE ADJUSTED AS DIRECTED BY THE COMPANY INSPECTOR TO ACTUAL SITE CONDITIONS.
   c. SILT FENCE OR STRAW BALE INSTALLATIONS SHALL INCLUDE REMOVABLE SECTIONS TO FACILITATE ACCESS DURING CONSTRUCTION. UTILIZE STRAW BALE BARRIERS ONLY IN LIEU OF A SILT FENCE WHERE FREQUENT ACCESS IS REQUIRED.
   d. SEDIMENT LADEN WATER FROM TRENCH DEWATERING SHALL BE DISCHARGED TO A WELL VEGETATED UPLAND AREA INTO A STRAW BALE DEWATERING STRUCTURE OR GEOTEXTILE FILTER BAG.
   e. SEDIMENT CONTROL STRUCTURES MUST BE IN PLACE AT ALL TIMES ACROSS THE DISTURBED PORTIONS OF THE RIGHT-OF-WAY EXCEPT DURING EXCAVATION/INSTALLATION OF THE CROSSING PIPE.
   f. SOFT DITCH PLUGS MUST REMAIN IN PLACE AT CONVENIENT LOCATIONS TO SEPARATE MAINLINE DITCH FROM THE RIVER CROSSING UNTIL THE RIVER CROSSING IS INSTALLED AND BACKFILLED.
5. PIPE SHALL BE STRUNG AND WELDED FOR READY INSTALLATION PRIOR TO WATERCOURSE TRENCHING.
6. FLUME CAPACITY DURING DRY CROSSING SHALL BE SUFFICIENT TO ACCOMMODATE 1.5 TIMES THE FLOW MEASURED AT THE TIME OF CONSTRUCTION PROVIDED THAT THE FLUMES WILL BE IN PLACE NOT MORE THAN 96 HOURS AND NO PRECIPITATION IS FORECAST. FLUME CAPACITY FOR VEHICLE ACCESS SHALL BE SUFFICIENT TO PASS THE 2 YEAR DESIGN FLOW OR THE FLOW REASONABLY EXPECTED TO OCCUR DURING THE INSTALLATION. EXCESS FLUMES REQUIRED FOR LONGER TERM ACCESS SHALL BE CAPPED DURING DRY CROSSING PROCEDURES.
7. ENSURE THAT THE DAMS AND VEHICLE CROSSING ARE LOCATED FAR ENOUGH APART TO ALLOW FOR A WIDE EXCAVATION.
8. FLUMES ARE TO BE SET WITH 10 PERCENT OF THEIR DIAMETER BELOW STREAMBED LEVEL WHERE SOIL CONDITIONS PERMIT (OTHERWISE INSTALLED AT STREAM GRADE AND SLOPE.)
9. PLACE IMPERVIOUS DAMS AT EACH END OF THE FLUME, UPSTREAM FIRST, THEN DOWNSTREAM. ACCEPTABLE ALTERNATIVES INCLUDE GRAVEL WITH RIP-RAP PROTECTION, SAND BAGS, STEEL PLATE AND ROCKFILL. DURING INSTALLATION, INSTALL AN IMPERVIOUS MEMBRANE, IF NECESSARY, TO LIMIT LEAKAGE. DAMS MAY NEED KEYING INTO THE BANK AND STREAMBED.
   EXCAVATE TRENCH THROUGH PLUGS AND UNDER FLUME FROM BOTH SIDES. WORK IS TO BE COMPLETED AS QUICKLY AS POSSIBLE.
   a. LOWER IN PIPE BY PASSING UNDER FLUME AND BACKFILL IMMEDIATELY WITH SPOIL MATERIAL.
   b. IT IS NOT NECESSARY TO DEWATER THE IN-STREAM TRENCH, HOWEVER, DISPLACED WATER SHALL BE PUMPED TO A STABLE UPLAND AREA TO AVOID OVERTOPPING OF DAMS DURING PIPE PLACEMENT.
   c. IF THE SPOIL MATERIAL IS NOT SUITABLE, USE IMPORTED CLEAN GRANULAR MATERIAL.
   d. IF BLASTING IS REQUIRED, USE CONTROLLED BLASTING TECHNIQUES TO PREVENT DAMAGE TO THE FLOW CONVEYANCE SYSTEM. ALTERNATIVELY, BLASTING MAY BE ACCOMPLISHED PRIOR TO THE FLUME INSTALLATION BY DRILLING THROUGH THE OVERBURDEN.
10. EXCAVATED MATERIAL MUST NOT BE STOCKPILED WITHIN 10 FT. OF THE WATERCOURSE. THIS MATERIAL SHALL BE CONTAINED TO PREVENT SATURATED SOIL FROM FLOWING BACK INTO THE WATERCOURSE.
11. DEWATERING OF THE ONLAND TRENCH SHOULD OCCUR IN A STABLE VEGETATED AREA A MINIMUM OF 50 FT. FROM ANY WATERBODY. THE PUMP DISCHARGE SHOULD BE DIRECTED ONTO A STABLE SPILL PAD CONSTRUCTED OF ROCKFILL OR TIMBERS TO PREVENT LOCALIZED EROSION. THE DISCHARGE WATER SHOULD ALSO BE FORCED INTO SHEET FLOW IMMEDIATELY BEYOND THE SPILL PAD BY USING STRAW BALES AND THE NATURAL TOPOGRAPHY.
12. FLUMES SHOULD BE REMOVED AS SOON AS POSSIBLE, WHEN NO LONGER REQUIRED FOR PIPE LAYING OR FOR ROAD ACCESS, IN THE FOLLOWING MANNER:
   a. REMOVE THE VEHICLE CROSSING RAMP. BANKS ARE TO BE RESTORED TO A STABLE ANGLE AND PROTECTED WITH EROSION RESISTANT MATERIAL COMPATIBLE WITH THE FLOW CONDITIONS (E.G., EROSION CONTROL BLANKETS, CRIBBING, ROCK RIP-RAP, ETC.) TO THE MAXIMUM EXTENT POSSIBLE BEFORE REMOVING THE DAMS.
   b. REMOVE DOWNSTREAM DAM.
   c. REMOVE UPSTREAM DAM.
   d. REMOVE FLUME.
   e. COMPLETE BANK TRIMMING AND EROSION PROTECTION. IF SANDBAGS ARE USED FOR THE DAMS, PLACE AND REMOVE BY HAND TO AVOID EQUIPMENT BREAKING BAGS.
13. RESTORE THE STREAMBED AND BANKS TO APPROXIMATE PRE-CONSTRUCTION CONTOURS, BUT NOT TO EXCEED 2 HORIZONTAL TO 1 VERTICAL.
   a. INSTALL PERMANENT EROSION AND SEDIMENT CONTROL STRUCTURES AS INDICATED ON A SITE SPECIFIC BASIS. IN THE ABSENCE OF SITE SPECIFIC INFORMATION, A FLEXIBLE CHANNEL LINER SUCH AS NAG C125 OR C350 WHICH IS CAPABLE OF WITHSTANDING ANTICIPATED FLOW SHALL BE INSTALLED. ALTERNATIVELY, ROCK RIP-RAP SHALL BE INSTALLED.
   b. ANY MATERIALS PLACED IN THE STREAM TO FACILITATE CONSTRUCTION SHALL BE REMOVED DURING RESTORATION. BANKS SHALL BE STABILIZED AND TEMPORARY SEDIMENT BARRIERS INSTALLED AS SOON AS POSSIBLE AFTER CROSSING, BUT WITHIN 24 HOURS OF COMPLETING THE CROSSING.
   c. MAINTAIN A SILT FENCE OR STRAW BALE BARRIER ALONG THE WATER COURSE UNTIL VEGETATION IS ESTABLISHED IN ADJACENT DISTURBED AREAS.

REVISIONS		
01	REVISED TITLE	2010-10-15 10:17am G:\2000DraftingandGIS\CADFiles\Drawings\PhaseIV_IFB\Crossing_Details_20081104.dwg Dan Tran
02	2010-10-11 REVISED TITLE BLOCK	

TransCanada
In business to deliver

PREPARED BY:
TROW ENGINEERING CONSULTANTS, INC.
2700 S. Post Oak Blvd., Suite 400
Houston, TX 77056
Phone: 1-713-693-6400
Fax: 1-713-693-6491
Trow

DESIGNER: JMP (NAME) 2008-09-08 (DATE)

CHECKED BY: WSF

DESIGN CHECKER: RW P7100

KEYSTONE STEELE CITY (NPS 36 2011) PHILLIPS SECTION

FIA # 4359 | CHAINAGE: | DISCIPLINE # 03

TITLE
DETAIL 13A
TYPICAL DRY FLUME CROSSING METHOD – CONSTRUCTION PROCEDURES

SCALE N.T.S. | DWG No 4359-03-ML-03-708 | REV 02

TC_A4_BR.DWG 8.5X11

CADD DRAWING: DO NOT MAKE MANUAL REVISIONS

THESE ARE TYPICAL DRAWINGS; ACTUAL SITE CONDITIONS MAY VARY FROM THE SITE GRAPHICALLY REPRESENTED.

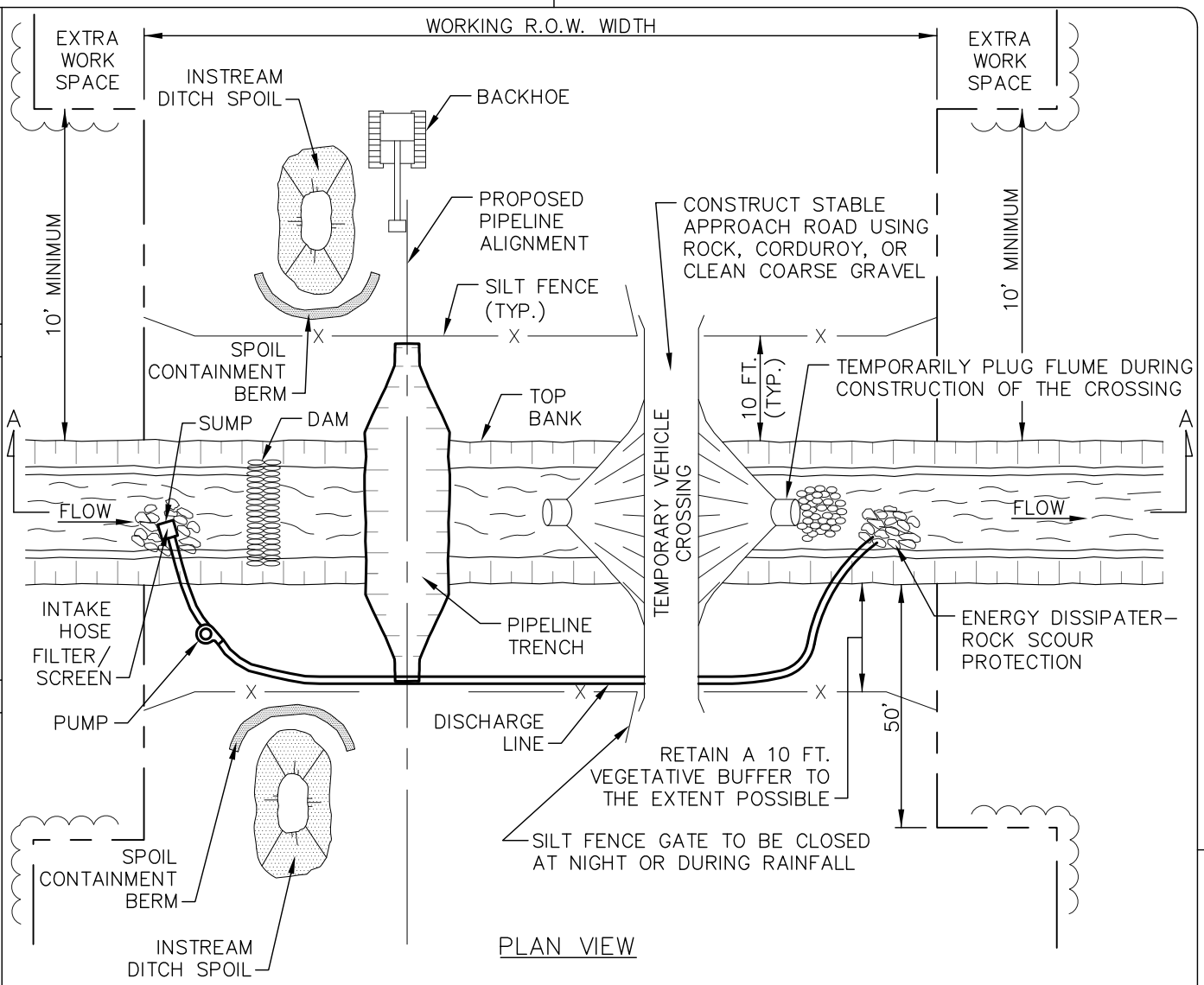

PLAN VIEW

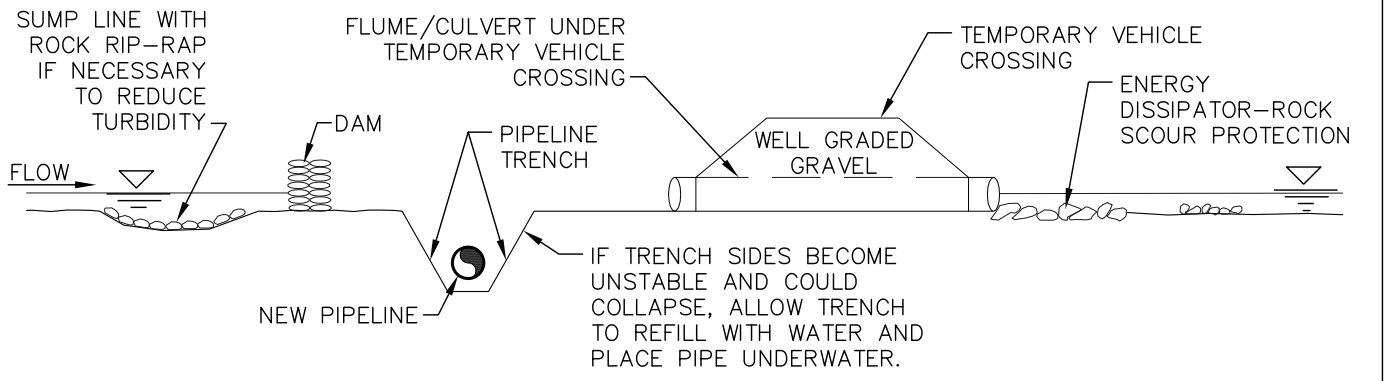

SECTION A-A

NOTES:

1. PIPELINE PLACEMENT WITHIN RIGHT-OF-WAY CONCEPTUAL ONLY.
2. SEE DETAIL 14A FOR CONSTRUCTION PROCEDURES.

REVISIONS 01 2010-10-11 REVISED TITLE BLOCK

2010-10-15 10:18am G:\2000DraftingandGIS\CADFiles\Drawings\PhaseIV_IFB\Crossing_Details_20081104.dwg Dan Tran

TransCanada
In business to deliver

PREPARED BY:
TROW ENGINEERING CONSULTANTS, INC.
2700 S. Post Oak Blvd., Suite 400
Houston, TX 77056
Phone: 1-713-693-6400
Fax: 1-713-693-6491
Trow

DESIGNER: JMP (NAME) 2008-09-08 (DATE)

CHECKED BY: WSF

DESIGN CHECKER: RW P7100

KEYSTONE STEELE CITY (NPS 36 2011) PHILLIPS SECTION

FIA # 4359 | CHAINAGE: | DISCIPLINE # 03

TITLE

DETAIL 14
TYPICAL DAM AND PUMP CROSSING

SCALE N.T.S. | DWG No 4359-03-ML-03-709 | REV 01

TC_A4_BR.DWG 8.5X11

CADD DRAWING: DO NOT MAKE MANUAL REVISIONS

THESE ARE TYPICAL DRAWINGS; ACTUAL SITE CONDITIONS MAY VARY FROM THE SITE GRAPHICALLY REPRESENTED.

CONSTRUCTION PROCEDURES:

1. WHERE NECESSARY, OBTAIN PRIOR APPROVAL BEFORE USING THE DAM AND PUMP METHOD.
2. IF THERE IS ANY FLOW IN THE WATERCOURSE, INSTALL PUMPS TO MAINTAIN STREAMFLOW AROUND THE BLOCKED OFF SECTIONS OF CHANNEL. THE PUMP IS TO HAVE 1.5 TIMES THE PUMPING CAPACITY OF ANTICIPATED FLOW. A SECOND STANDBY PUMP OF EQUAL CAPACITY IS TO BE READILY AVAILABLE AT ALL TIMES. AN ENERGY DISSIPATER IS TO BE BUILT TO ACCEPT PUMP DISCHARGE WITHOUT STREAMBED OR STREAMBANK EROSION. IF THE CROSSING IS PROLONGED BEYOND ONE DAY THE OPERATION NEEDS TO BE MONITORED OVERNIGHT.
3. SCHEDULE INSTREAM ACTIVITY FOR LOW FLOW PERIODS IF POSSIBLE.
4. MARK OUT AND MAINTAIN LIMITS OF AUTHORIZED WORK AREAS WITH FENCING OR FLAGGING TAPE TO AVOID UNNECESSARY DISTURBANCE OF VEGETATION. ENSURE EQUIPMENT OPERATORS WORKING ON THE CROSSING HAVE BEEN BRIEFED ABOUT THIS PLAN AND THE MEASURES NEEDED TO PROTECT WATER QUALITY. INSTALL PRE-WORK SEDIMENT CONTROL MEASURES AS SPECIFIED IN THE PLAN. ALL NECESSARY EQUIPMENT AND MATERIALS TO BUILD THE DAMS AND TO PUMP WATER MUST BE ON SITE OR READILY AVAILABLE PRIOR TO COMMENCING IN-WATER CONSTRUCTION. PIPE SHOULD BE STRUNG, WELDED AND COATED AND READY FOR INSTALLATION PRIOR TO WATERCOURSE TRENCHING.
5. CONTRACTOR SHALL SUPPLY, INSTALL AND MAINTAIN SEDIMENT CONTROL STRUCTURES, AS DEPICTED AND ALONG DOWN GRADIENT SIDES OF WORK AREAS AND STAGING AREAS SUCH THAT NO HEAVILY SILT LADEN WATER ENTERS STREAM.
   a. NO HEAVILY SILT LADEN WATER SHALL BE DISCHARGED DIRECTLY INTO THE STREAM.
   b. EROSION AND SEDIMENT CONTROL STRUCTURE LOCATIONS AS DEPICTED ARE APPROXIMATE AND MAY BE ADJUSTED AS DIRECTED BY THE COMPANY INSPECTOR TO ACTUAL SITE CONDITIONS.
   c. SILT FENCE OR STRAW BALE INSTALLATIONS SHALL INCLUDE REMOVABLE SECTIONS TO FACILITATE ACCESS DURING CONSTRUCTION. UTILIZE STRAW BALE BARRIERS ONLY IN LIEU OF A SILT FENCE WHERE FREQUENT ACCESS IS REQUIRED.
   d. SEDIMENT LADEN WATER FROM TRENCH DEWATERING SHALL BE DISCHARGED TO A WELL VEGETATED UPLAND AREA INTO A STRAW BALE DEWATERING STRUCTURE OR GEOTEXTILE FILTER BAG.
   e. SEDIMENT CONTROL STRUCTURES MUST BE IN PLACE AT ALL TIMES ACROSS THE DISTURBED PORTIONS OF THE RIGHT-OF-WAY EXCEPT DURING EXCAVATION/INSTALLATION OF THE CROSSING PIPE.
   f. SOFT DITCH PLUGS MUST REMAIN IN PLACE AT CONVENIENT LOCATIONS TO SEPARATE MAINLINE DITCH FROM THE RIVER CROSSING UNTIL THE RIVER CROSSING IS INSTALLED AND BACKFILLED.
6. TO THE EXTENT POSSIBLE, MAINTAIN A MINIMUM 10 FEET VEGETATIVE BUFFER STRIP BETWEEN DISTURBED AREAS AND THE WATERCOURSE. INSTALL AND MAINTAIN A SILT FENCE UPSLOPE OF THE BUFFER STRIP ON EACH SIDE OF THE WATERCOURSE. THE SILT FENCE SHOULD INCORPORATE REMOVABLE "GATES" AS REQUIRED TO ALLOW ACCESS WHILE MAINTAINING EASE OF REPLACEMENT FOR OVERNIGHT OR DURING PERIODS OF RAINFALL.
7. CONSTRUCT A TEMPORARY SUMP UPSTREAM OF THE DAM AND LINE WITH ROCKFILL IF A NATURAL POOL DOES NOT EXIST. INSTALL THE PUMP OR PUMP INTAKE IN THE POOL OR SUMP. DISCHARGE WATER ONTO AN ENERGY DISSIPATER DOWNSTREAM OF THE WORK AREA.
8. EXCAVATED MATERIAL MUST NOT BE STOCKPILED WITHIN 10 FT. OF THE WATERCOURSE. THIS MATERIAL MUST BE CONTAINED WITHIN BERM CONTAINMENT, WITH SECONDARY SILT FENCE PROTECTION TO PREVENT SATURATED SOIL FROM FLOWING BACK INTO THE WATERCOURSE.
9. CHEMICALS, FUELS, LUBRICATING OILS SHALL NOT BE STORED AND EQUIPMENT REFUELED WITHIN 100 FT. OF THE WATERBODY. PUMPS ARE TO BE REFUELED AS PER THE SPCC PLANS.
10. STAGING AREAS ARE TO BE LOCATED AT LEAST 10 FT. FROM THE WATER'S EDGE (WHERE TOPOGRAPHIC CONDITIONS PERMIT) AND SHALL BE THE MINIMUM SIZE NEEDED.
11. DAMS ARE TO BE MADE OF STEEL PLATE, INFLATABLE PLASTIC DAM, SAND BAGS, COBBLES, WELL GRADED COARSE GRAVEL FILL, OR ROCK FILL. DAMS MAY NEED KEYING INTO THE BANKS AND STREAMBED. ENSURE THAT THE DAM AND VEHICLE CROSSING ARE LOCATED FAR ENOUGH APART TO ALLOW FOR A WIDE EXCAVATION. CAP FLUMES USED UNDER VEHICLE CROSSING DURING DRY CROSSING.
12. DEWATER AREA BETWEEN DAMS IF POSSIBLE. DEWATERING SHOULD OCCUR IN A STABLE VEGETATIVE AREA A MINIMUM OF 50 FT. FROM ANY WATERBODY. THE PUMP DISCHARGE SHOULD BE DISCHARGED ONTO A STABLE SPILL PAD CONSTRUCTED OF ROCKFILL SANDBAGS, OR TIMBERS TO PREVENT LOCALIZED EROSION. THE DISCHARGE WATER SHOULD ALSO BE FORCED INTO SHEET FLOW IMMEDIATELY BEYOND THE SPILL PAD BY USING STRAW BALES AND THE NATURAL TOPOGRAPHY DISCHARGED WATER SHALL NOT BE ALLOWED TO FLOW INTO ANY WATERCOURSE OR WETLAND. IF IT IS NOT POSSIBLE TO DEWATER THE EXCAVATION DUE TO SOILS WITH A HIGH HYDRAULIC CONDUCTIVITY, THE EXCAVATION AND PIPE PLACEMENT IS TO BE CARRIED OUT IN THE STANDING WATER. PUMP ANY DISPLACED WATER AS DESCRIBED ABOVE TO PREVENT OVERTOPPING OF DAMS.
13. EXCAVATE TRENCH THROUGH PLUGS AND STREAMBED FROM BOTH SIDES, RE-POSITIONING DISCHARGE HOSE AS NECESSARY. LOWER THE PIPE IN THE TRENCH AND BACKFILL IMMEDIATELY. DURING THIS OPERATION WORK IS TO BE COMPLETED AS QUICKLY AS POSSIBLE.
14. CONTRACTOR SHALL RESTORE THE STREAM BED AND BANKS TO APPROXIMATE PRE-CONSTRUCTION CONTOURS, BUT NOT TO EXCEED 2 HORIZONTAL TO 1 VERTICAL.
   a. CONTRACTOR SHALL INSTALL PERMANENT EROSION AND SEDIMENT CONTROL STRUCTURES AS INDICATED ON A SITE SPECIFIC BASIS. IN THE ABSENCE OF SITE SPECIFIC INFORMATION, A FLEXIBLE CHANNEL LINER SUCH AS NAG C125 OR C350 WHICH IS CAPABLE OF WITHSTANDING ANTICIPATED FLOW SHALL BE INSTALLED. ALTERNATIVELY, ROCK RIP-RAP SHALL BE INSTALLED.
   b. ANY MATERIALS PLACED IN THE STREAM TO FACILITATE CONSTRUCTION SHALL BE REMOVED DURING RESTORATION. BANKS SHALL BE STABILIZED AND TEMPORARY SEDIMENT BARRIERS INSTALLED AS SOON AS POSSIBLE AFTER CROSSING, BUT WITHIN 24 HOURS OF COMPLETING THE CROSSING.
   c. MAINTAIN A SILT FENCE OR STRAW BALE BARRIER ALONG THE WATER COURSE UNTIL VEGETATION IS ESTABLISHED IN ADJACENT DISTURBED AREAS.
15. WHEN THE STREAMBED HAS BEEN RESTORED, THE CREEK BANKS ARE TO BE CONTOURED TO A STABLE ANGLE AND PROTECTED WITH EROSION RESISTANT MATERIAL COMPATIBLE WITH FLOW VELOCITY BETWEEN DAMS (E.G., EROSION CONTROL BLANKETS, CRIBBING, ROCK RIP-RAP, ETC.). THE DAMS ARE TO BE REMOVED DOWNSTREAM FIRST. KEEP PUMP RUNNING UNTIL NORMAL FLOW IS RESUMED. COMPLETE BANK TRIMMING AND EROSION PROTECTION. IF SANDBAGS ARE USED FOR THE DAMS, PLACE AND REMOVE BY HAND TO AVOID EQUIPMENT BREAKING BAGS.

REVISIONS		
01	REVISED TITLE	2010-10-15 10:18am G:\2000DraftingandGIS\CADFiles\Drawings\PhaseIV_IFB\Crossing_Details_20081104.dwg Dan Tran
02	2010-10-11 REVISED TITLE BLOCK	

TransCanada
In business to deliver

PREPARED BY:
TROW ENGINEERING CONSULTANTS, INC.
2700 S. Post Oak Blvd., Suite 400
Houston, TX 77056
Phone: 1-713-693-6400
Fax: 1-713-693-6491
Trow

DESIGNER: JMP (NAME) 2008-09-08 (DATE)

CHECKED BY: WSF

DESIGN CHECKER: RW P7100

KEYSTONE STEELE CITY (NPS 36 2011) PHILLIPS SECTION

FIA # 4359 | CHAINAGE: | DISCIPLINE # 03

TITLE
DETAIL 14A
TYPICAL DAM AND PUMP CROSSING – CONSTRUCTION PROCEDURES

SCALE N.T.S. | DWG No 4359-03-ML-03-710 | REV 02

TC_A4_BR.DWG 8.5X11

CADD DRAWING: DO NOT MAKE MANUAL REVISIONS

THESE ARE TYPICAL DRAWINGS; ACTUAL SITE CONDITIONS MAY VARY FROM THE SITE GRAPHICALLY REPRESENTED.

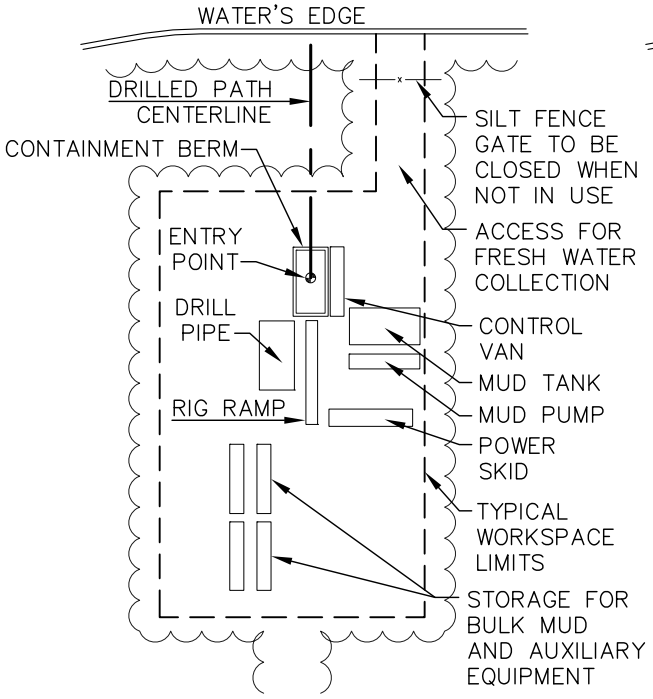

SITE PLAN
ENTRY SIDE

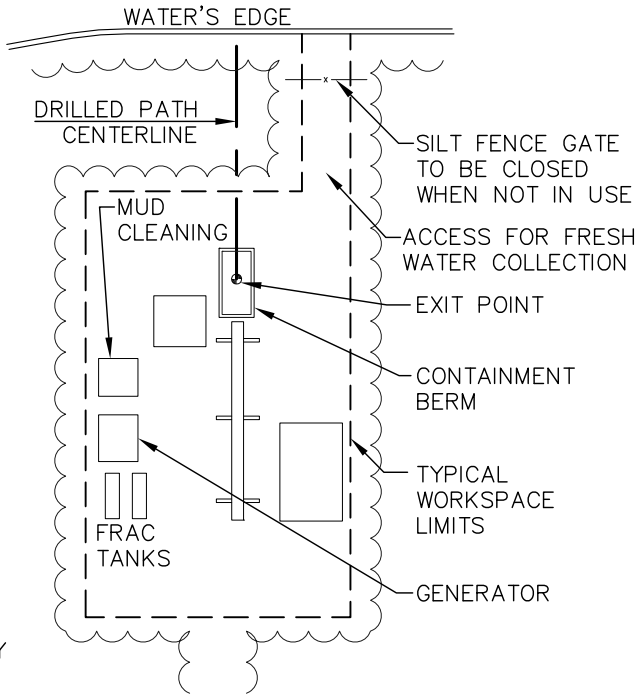

SITE PLAN
EXIT SIDE

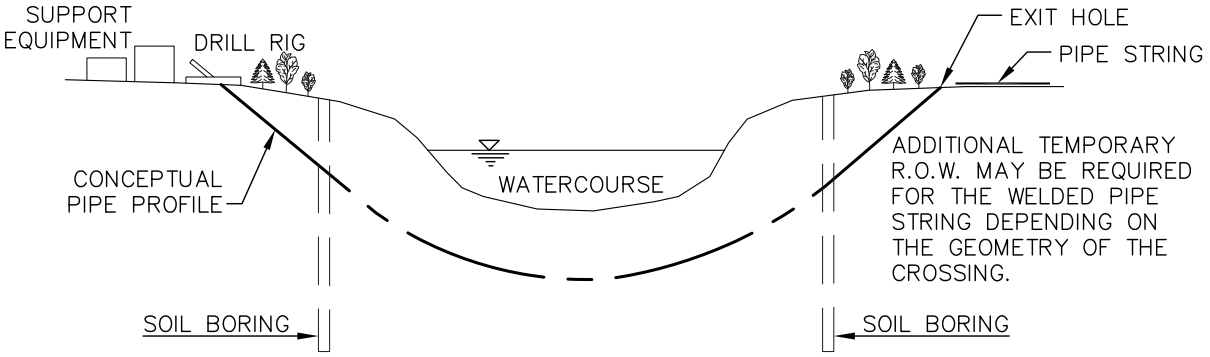

PROFILE

NOTES:

1. SET UP DRILLING EQUIPMENT A MINIMUM OF 100 FEET FROM THE EDGE OF THE WATERCOURSE. LIMIT CLEARING BETWEEN DRILL ENTRY AND EXIT POINT TO HAND CUTTING BRUSH FOR TRACKING WIRES.
2. ENSURE THAT ONLY BENTONITE–BASED DRILLING MUD IS USED.
3. INSTALL SUITABLE DRILLING MUD TANKS OR SUMPS TO PREVENT CONTAMINATION OF WATERCOURSE.
4. INSTALL BERMS DOWNSLOPE FROM THE DRILL ENTRY AND ANTICIPATED EXIT POINTS TO CONTAIN ANY RELEASE OF DRILLING MUD.
5. DISPOSE OF DRILLING MUD IN ACCORDANCE WITH THE APPROPRIATE REGULATORY AUTHORITY REQUIREMENTS.

REVISIONS		
01	UPDATED DRAWING NOTES	2010–10–15 10:21am G:\2000DraftingandGIS\CADFiles\Drawings\PhaseIV_IFB\Erosion_Details_20081104.dwg Dan Tran
02	2010–10–11 REVISED TITLE BLOCK	

TransCanada
In business to deliver

PREPARED BY:
TROW ENGINEERING CONSULTANTS, INC.
2700 S. Post Oak Blvd., Suite 400
Houston, TX 77056
Phone: 1–713–693–6400
Fax: 1–713–693–6491
Trow

DESIGNER: JMP (NAME) 2008–09–08 (DATE)

CHECKED BY: WSF

DESIGN CHECKER: RW

P7100

KEYSTONE STEELE CITY (NPS 36 2011) PHILLIPS SECTION

FIA # 4359 | CHAINAGE: | DISCIPLINE # 03

TITLE

DETAIL 15
TYPICAL HORIZONTAL DRILL (HDD) SITE PLAN & PROFILE

SCALE N.T.S. | DWG No 4359–03–ML–03–711 | REV 02

TC_A4_BR.DWG 8.5X11

CADD DRAWING: DO NOT MAKE MANUAL REVISIONS

THESE ARE TYPICAL DRAWINGS; ACTUAL SITE CONDITIONS MAY VARY FROM THE SITE GRAPHICALLY REPRESENTED.

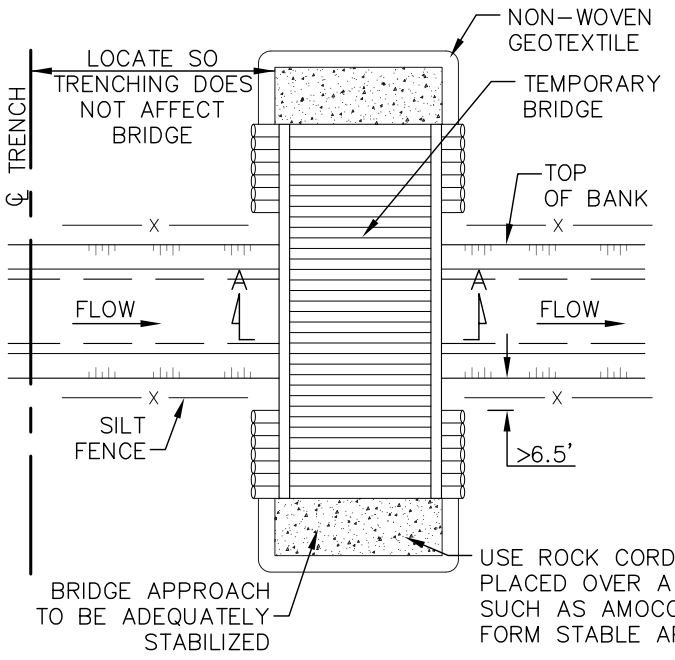

PLAN VIEW

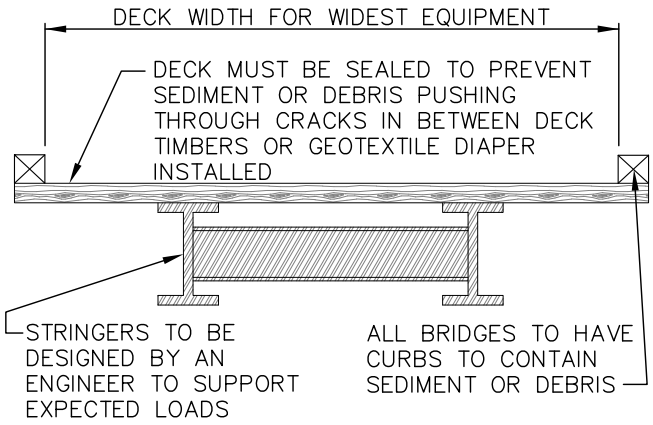

SECTION A–A

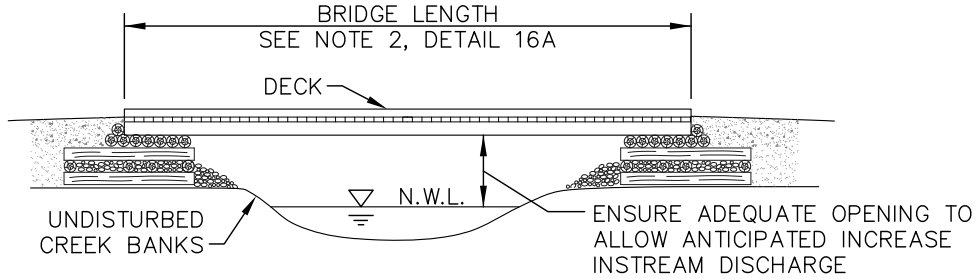

BRIDGE PROFILE

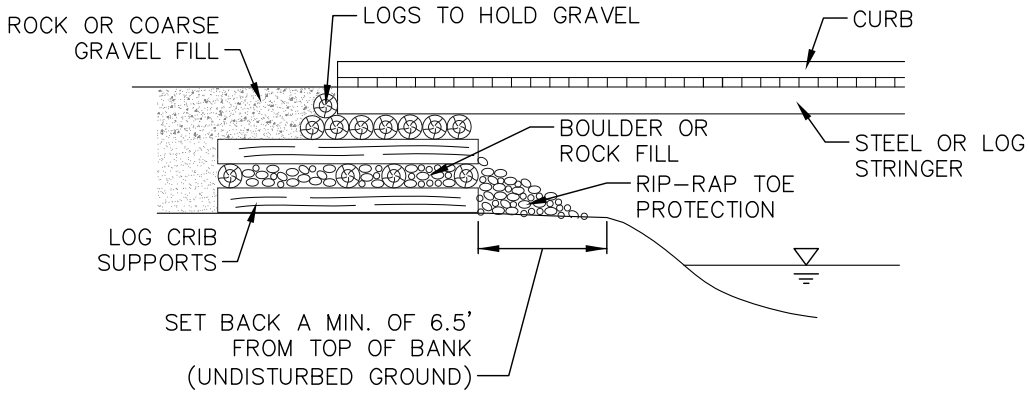

TYPICAL TEMPORARY CRIB ABUTMENT

REVISIONS 01 2010-10-11 REVISED TITLE BLOCK

2010-10-15 10:22am G:\2000DraftingandGIS\CADFiles\Drawings\PhaseIV_IFB\Crossing_Details_20081104.dwg Dan Tran

TransCanada
In business to deliver

PREPARED BY:
TROW ENGINEERING CONSULTANTS, INC.
2700 S. Post Oak Blvd., Suite 400
Houston, TX 77056
Phone: 1-713-693-6400
Fax: 1-713-693-6491
Trow

DESIGNER:		KEYSTONE STEELE CITY (NPS 36 2011) PHILLIPS SECTION		
JMP (NAME)	2008-09-08 (DATE)	FIA # 4359	CHAINAGE:	DISCIPLINE # 03
		TITLE: DETAIL 16 TYPICAL TEMPORARY BRIDGE CROSSING		
CHECKED BY: WSF	DESIGN CHECKER: RW P7100	SCALE N.T.S.	DWG No 4359-03-ML-03-712	REV 01

TC_A4_BR.DWG 8.5X11

CADD DRAWING: DO NOT MAKE MANUAL REVISIONS

THESE ARE TYPICAL DRAWINGS; ACTUAL SITE CONDITIONS MAY VARY FROM THE SITE GRAPHICALLY REPRESENTED.

CONSTRUCTION PROCEDURES:

IN GENERAL TERMS, THE FOLLOWING IS A SEQUENCE OF CONSTRUCTION PROCEDURES THAT ARE RECOMMENDED TO BE FOLLOWED FOR TEMPORARY BRIDGE CROSSINGS:

1. A PORTABLE BRIDGE, FLEXI–FLOAT OR FLUMED VEHICLE CROSSING MAY BE SUBSTITUTED FOR THE TEMPORARY BRIDGE. IT IS IMPORTANT THAT THE SIZE OF THE TOTAL OPENING BE SELECTED SO THE STRUCTURE CAN SAFELY PASS FLOOD FLOWS THAT CAN REASONABLY BE EXPECTED TO OCCUR DURING THE LIFE OF THE CROSSING.

2. DETERMINE BRIDGE LENGTH REQUIRED AND FOLLOW EITHER METHOD A) OR B) FOR DETERMINING THE OPENING SIZE. IF A) IS FOLLOWED, A MINIMUM 6.5 FT. SETBACK FROM TOP OF BANK MUST BE PRESERVED AS A "NO DISTURBANCE AREA". IF ABUTMENTS OR PIERS IN THE STREAMBED ARE REQUIRED, METHOD B) IS TO BE FOLLOWED.

3. INSTALL THE BRIDGE IN A MANNER THAT WILL MINIMIZE SEDIMENT ENTERING THE WATER. STRINGERS MUST BE DESIGNED TO SUPPORT THE LOADS EXPECTED ON THE BRIDGE. CURBS MUST BE INSTALLED ALONG THE EDGE OF THE DECK TO CONTAIN SEDIMENT AND DEBRIS ON THE BRIDGE. FASTENERS CONNECTING COMPONENTS MUST BE STRONG ENOUGH TO HOLD THEM IN POSITION DURING THE LIFE OF THE BRIDGE. CRIBS ARE TO BE FILLED WITH ROCK OR COBBLE. RIP–RAP EROSION PROTECTION IS TO BE PLACED AROUND THE CRIBS AND ON ANY FILL SLOPES PROJECTING INTO THE WATERBODY.

4. ROAD APPROACHES LEADING TO THE BRIDGE MUST BE RAISED AND STABLE SO EQUIPMENT LOADS ARE SUPPORTED A SUFFICIENT DISTANCE BACK FROM THE WATER TO REDUCE SEDIMENT AND DEBRIS ENTERING THE WATERBODY FROM EQUIPMENT TRACKS. THIS MAY REQUIRE USING MATERIALS SUCH AS GRAVEL, ROCK OR CORDUROY. DO NOT USE SOIL TO CONSTRUCT OR STABILIZE EQUIPMENT BRIDGES. IF CUTS ARE NEEDED TO OBTAIN A SATISFACTORY GRADE, THEY ARE TO BE DUG WITH SIDE DITCHES AND STABLE SLOPES. EROSION AND SEDIMENT CONTROL MEASURES ARE TO BE INSTALLED TO KEEP SEDIMENT ON LAND (E.G., SILT FENCING, FILTER CLOTH, RIP–RAP, SEED AND MULCH, ETC.)

5. MAINTAIN A SILT FENCE ON EACH SIDE OF THE WATERBODY EXTENDING A MINIMUM OF 10 FEET BEYOND THE WIDTH OF DISTURBANCE UNTIL VEGETATION HAS BEEN ESTABLISHED IN UPSLOPE AREAS.

6. PERIODICALLY CHECK BRIDGE INSTALLATION AND REMOVE ANY BUILD–UP OF SEDIMENT OR DEBRIS ON THE BRIDGE. DISPOSE OF THIS MATERIAL IN A LOW LYING AREA AT LEAST 100 FEET FROM THE WATERBODY.

7. REMOVE TEMPORARY CROSSINGS AS SOON AS POSSIBLE AFTER FINAL CLEAN–UP. MATERIALS PLACED ALONG THE WATERBODY SHOULD BE COMPLETELY REMOVED DURING FINAL CLEAN–UP. REMOVAL SHOULD NOT OCCUR OUTSIDE THE CONSTRUCTION WINDOWS. SURPLUS GRAVEL IS TO BE SPREAD ON THE RIGHT–OF–WAY AS GRAVEL SHEETING, IF GRADATION IS SUITABLE, OR MOVED AT LEAST 100 FEET FROM TOP OF BANK FOR DISPOSAL. BRIDGE MATERIALS ARE TO BE REMOVED FROM THE CROSSING AREA. THE WATERBODY BED AND BANKS ARE TO BE RESTORED TO A STABLE ANGLE AND PROTECTED WITH EROSION RESISTANT MATERIAL COMPATIBLE WITH THE EXPECTED FLOW CONDITIONS.

2010–10–15 10:23am G:\2000DraftingandGIS\CADFiles\Drawings\PhaseIV_IFB\Crossing_Details_20081104.dwg Dan Tran

REVISIONS 01 2010–10–11 REVISED TITLE BLOCK

TransCanada
In business to deliver

PREPARED BY:
TROW ENGINEERING CONSULTANTS, INC.
2700 S. Post Oak Blvd., Suite 400
Houston, TX 77056
Phone: 1–713–693–6400
Fax: 1–713–693–6491
Trow

DESIGNER:		
JMP (NAME)	2008–09–08 (DATE)	
CHECKED BY: WSF	DESIGN CHECKER: RW P7100	

KEYSTONE STEELE CITY (NPS 36 2011) PHILLIPS SECTION

FIA # 4359	CHAINAGE:	DISCIPLINE # 03

TITLE
DETAIL 16A
TYPICAL TEMPORARY BRIDGE CROSSING – CONSTRUCTION PROCEDURES

SCALE N.T.S.	DWG No 4359–03–ML–03–713	REV 01

THESE ARE TYPICAL DRAWINGS; ACTUAL SITE CONDITIONS MAY VARY FROM THE SITE GRAPHICALLY REPRESENTED.

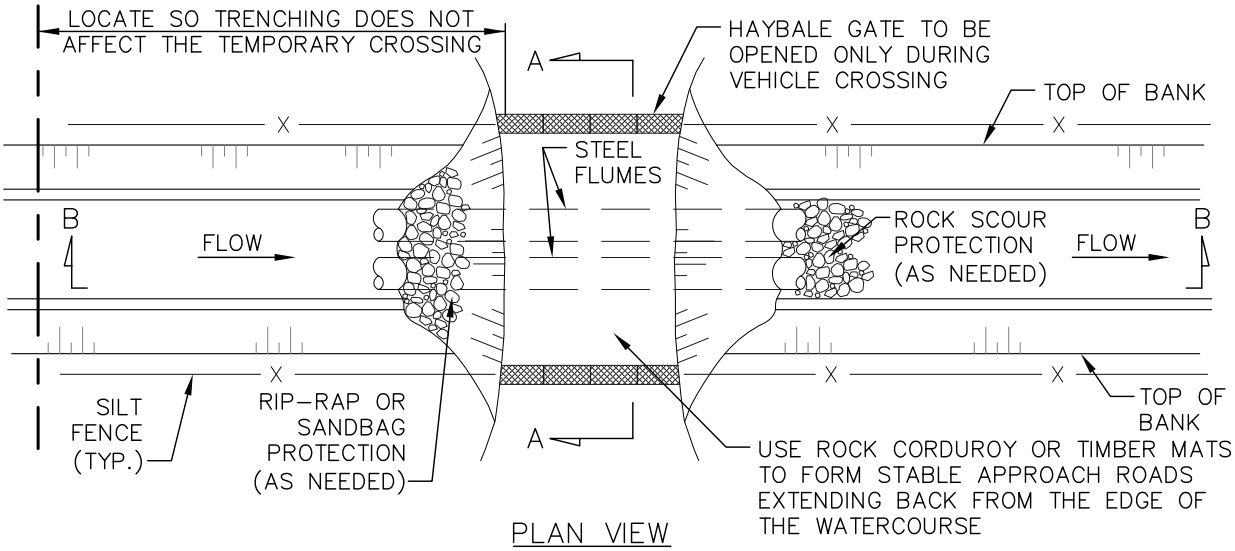

PLAN VIEW

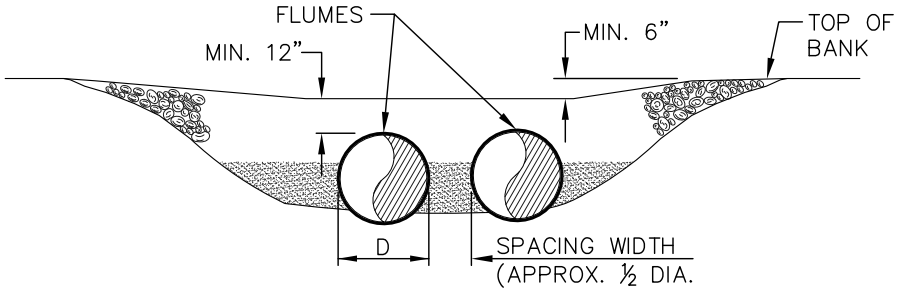

SECTION A–A

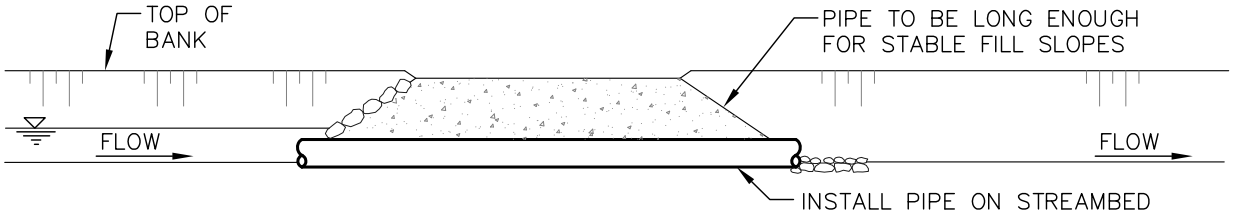

SECTION B–B

CONSTRUCTION PROCEDURES:

THE FOLLOWING IS A SEQUENCE OF CONSTRUCTION AND PROCEDURES MEASURES TO BE FOLLOWED AT ALL TEMPORARY FLUME VEHICLE CROSSINGS.

1. A PORTABLE FLEXI–FLOAT, OR TEMPORARY BRIDGE MAY BE SUBSTITUTED FOR THE TEMPORARY FLUME CROSSING.
2. THE LENGTH OF THE FLUME SHALL BE SUFFICIENT TO SPAN THE ENTIRE AREA REQUIRED FOR VEHICULAR ACCESS, EXTENDING 4 FEET BEYOND TOE OF FILL MATERIAL, SO TRENCHING WILL NOT AFFECT THE ROAD CROSSING. A LONGER PIPE IS TO BE USED, IF NEEDED, TO MAINTAIN STABLE SIDE SLOPES. FLUME CAPACITY TO BE BASED ON THE 2–YEAR DESIGN FLOW OR MAXIMUM FLOW ANTICIPATED TO OCCUR DURING INSTALLATION, AS SPECIFIED IN CONSTRUCTION DOCUMENTS.
3. WHERE PRACTICAL, BACKFILL AROUND THE PIPES AT THE ROAD WITH CLEAN, COARSE ROCK FILL MATERIAL. IF SCOUR IS POSSIBLE, RIP–RAP IS TO BE PLACED ON THE WATERBODY BED DOWNSTREAM OF THE PIPE OUTLET EXTENDING A MINIMUM OF TWO PIPE DIAMETERS. ALTERNATIVELY, TIMBER EQUIPMENT MATS, SAND BAGS OR TIMBER CORDUROY MAY BE USED TO FORM THE TRAVEL SURFACE.
4. TO REDUCE DEBRIS ENTERING THE WATERBODY FROM EQUIPMENT TRACKS, THE APPROACH ROAD LEADING TO THE CULVERT CROSSING MUST BE RAISED AND STABLE SO EQUIPMENT LOADS ARE SUPPORTED A SUFFICIENT DISTANCE BACK FROM THE WATER. IF CUTS ARE NEEDED TO OBTAIN A SATISFACTORY GRADE, THEY ARE TO BE DUG WITH SIDE DITCHES AND STABLE SLOPES. EROSION AND SEDIMENT CONTROL MEASURES ARE TO BE INSTALLED TO LIMIT THE POTENTIAL FOR SEDIMENT TO ENTER THE WATERBODY (E.G., CHECK DAMS, SILT FENCE, RIP–RAP, SEED AND MULCH, SEDIMENT TRAPS, ETC.).
5. PERIODICALLY CHECK THE TEMPORARY CROSSING INSTALLATION AND REMOVE ANY BUILD–UP OF SEDIMENT OR DEBRIS ON THE BRIDGE. DISPOSE OF THIS MATERIAL AT LEAST 100 FEET FROM THE WATERBODY AND ABOVE THE HIGH WATER LEVEL.
6. FOLLOWING COMPLETION OF THE CROSSING, REMOVE ROCKFILL IN/OR AROUND FLUME PIPES FROM THE WATERBODY OR WETLAND.
7. RESTORE STREAM BANKS AND WATERBODY BOTTOM.

REVISIONS		
01	2010–10–11	REVISED TITLE BLOCK

2010–10–15 10:24am G:\2000Draftingand0IS\CADFiles\Drawings\PhaseIV_IFB\Crossing_Details_20081104.dwg Dan Tran

TransCanada
In business to deliver

PREPARED BY:
TROW ENGINEERING CONSULTANTS, INC.
2700 S. Post Oak Blvd., Suite 400
Houston, TX 77056
Phone: 1–713–693–6400
Fax: 1–713–693–6491
Trow

DESIGNER: JMP (NAME) 2008–09–08 (DATE)

CHECKED BY: WSF

DESIGN CHECKER: RW P7100

KEYSTONE STEELE CITY (NPS 36 2011) PHILLIPS SECTION

FIA # 4359 | CHAINAGE: | DISCIPLINE # 03

TITLE

DETAIL 17
TYPICAL FLUME BRIDGE CROSSING

SCALE N.T.S. | DWG No 4359–03–ML–03–714 | REV 01

TC_A4_BR.DWG 8.5X11

CADD DRAWING: DO NOT MAKE MANUAL REVISIONS

THESE ARE TYPICAL DRAWINGS; ACTUAL SITE CONDITIONS MAY VARY FROM THE SITE GRAPHICALLY REPRESENTED.

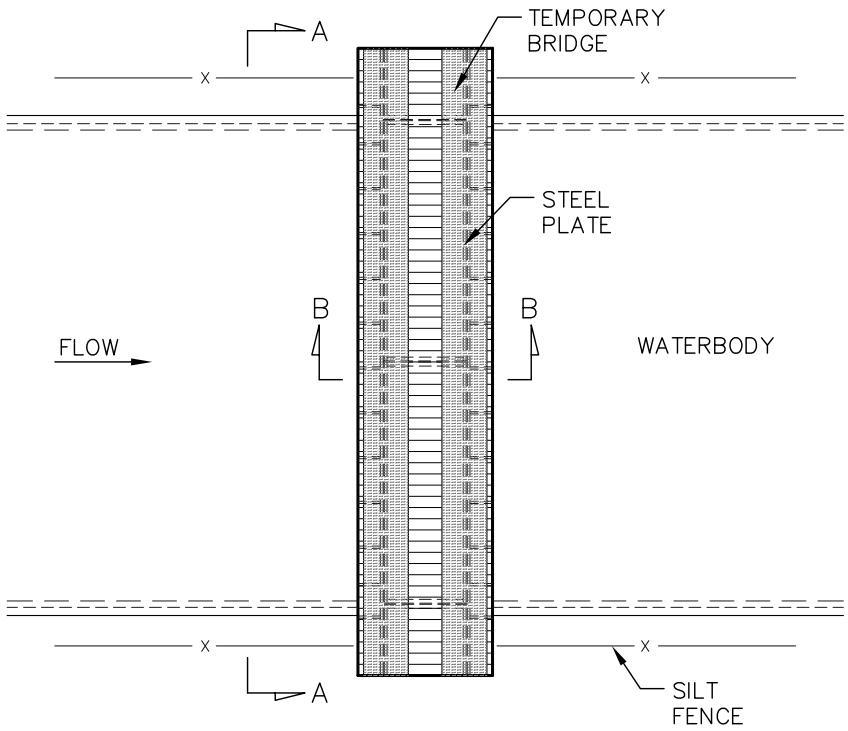

PLAN VIEW

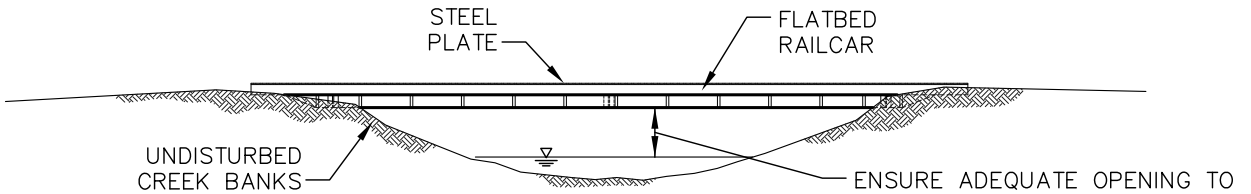

SECTION A–A

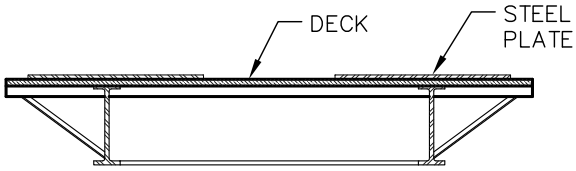

SECTION B–B

REVISIONS 01 2010–10–11 REVISED TITLE BLOCK

2010–10–15 10:25am G:\2000DraftingandGIS\CADFiles\Drawings\PhaseIV_IFB\Crossing_Details_20081104.dwg Dan Tran

TransCanada
In business to deliver

PREPARED BY:
TROW ENGINEERING CONSULTANTS, INC.
2700 S. Post Oak Blvd., Suite 400
Houston, TX 77056
Phone: 1–713–693–6400
Fax: 1–713–693–6491
Trow

DESIGNER: JMP (NAME) 2008–09–08 (DATE)

CHECKED BY: WSF

DESIGN CHECKER: RW P7100

KEYSTONE STEELE CITY (NPS 36 2011) PHILLIPS SECTION

FIA # 4359 | CHAINAGE: | DISCIPLINE # 03

TITLE

DETAIL 18
TYPICAL RAILCAR BRIDGE CROSSING

SCALE N.T.S. | DWG No 4359–03–ML–03–715 | REV 01

TC_A4_BR.DWG 8.5X11

CADD DRAWING: DO NOT MAKE MANUAL REVISIONS

THESE ARE TYPICAL DRAWINGS; ACTUAL SITE CONDITIONS MAY VARY FROM THE SITE GRAPHICALLY REPRESENTED.

CONSTRUCTION PROCEDURES:

1. THIS TYPICAL DRAWING PROVIDES FOR A RAILCAR BRIDGE EQUIPMENT CROSSING.

2. BRIDGE SHOULD BE A MINIMUM OF 12 FEET LONGER THAN BANK TO BANK WIDTH.

3. BEST MANAGEMENT PRACTICES UTILIZING EROSION CONTROL DEVICES, SUCH AS HAY BALES AND SILT FENCE ARE REQUIRED TO PREVENT SEDIMENTATION OF THE STREAM. EROSION PROTECTION SHALL BE PLACED ON THE STREAM BANKS.

4. DURING FINAL CLEAN-UP, REMOVE TEMPORARY EQUIPMENT CROSSINGS AS SOON AS POSSIBLE. INSTALLED MATERIALS, SUCH AS HAY BALES AND SILT FENCE MUST BE REMOVED AND DISPOSED IN ACCORDANCE WITH STATE AND LOCAL REGULATIONS AND REQUIREMENTS. THE STREAMBED, BANKS AND AREAS AFFECTED BY CONSTRUCTION OF THE TEMPORARY EQUIPMENT CROSSING SHOULD BE RESTORED TO A STABLE CONDITION. IF REQUIRED TO PREVENT TRANSPORT OF SEDIMENTATION TO THE STREAM, SILT FENCE SHOULD BE INSTALLED AT THE TOP OF THE BANKS.

2010-10-15 10:26am G:\2000DraftingandGIS\CADFiles\Drawings\PhaseIV_IFB\Crossing_Details_20081104.dwg Dan Tran

REVISIONS 01 2010-10-11 REVISED TITLE BLOCK

TransCanada
In business to deliver

PREPARED BY:
TROW ENGINEERING CONSULTANTS, INC.
2700 S. Post Oak Blvd., Suite 400
Houston, TX 77056
Phone: 1-713-693-6400
Fax: 1-713-693-6491
Trow

DESIGNER:		KEYSTONE STEELE CITY (NPS 36 2011) PHILLIPS SECTION		
JMP (NAME)	2008-09-08 (DATE)	FIA # 4359	CHAINAGE:	DISCIPLINE # 03
		TITLE: DETAIL 18A TYPICAL RAILCAR BRIDGE CROSSING – CONSTRUCTION PROCEDURES		
CHECKED BY: WSF	DESIGN CHECKER: RW P7100	SCALE N.T.S.	DWG No 4359-03-ML-03-716	REV 01

THESE ARE TYPICAL DRAWINGS; ACTUAL SITE CONDITIONS MAY VARY FROM THE SITE GRAPHICALLY REPRESENTED.

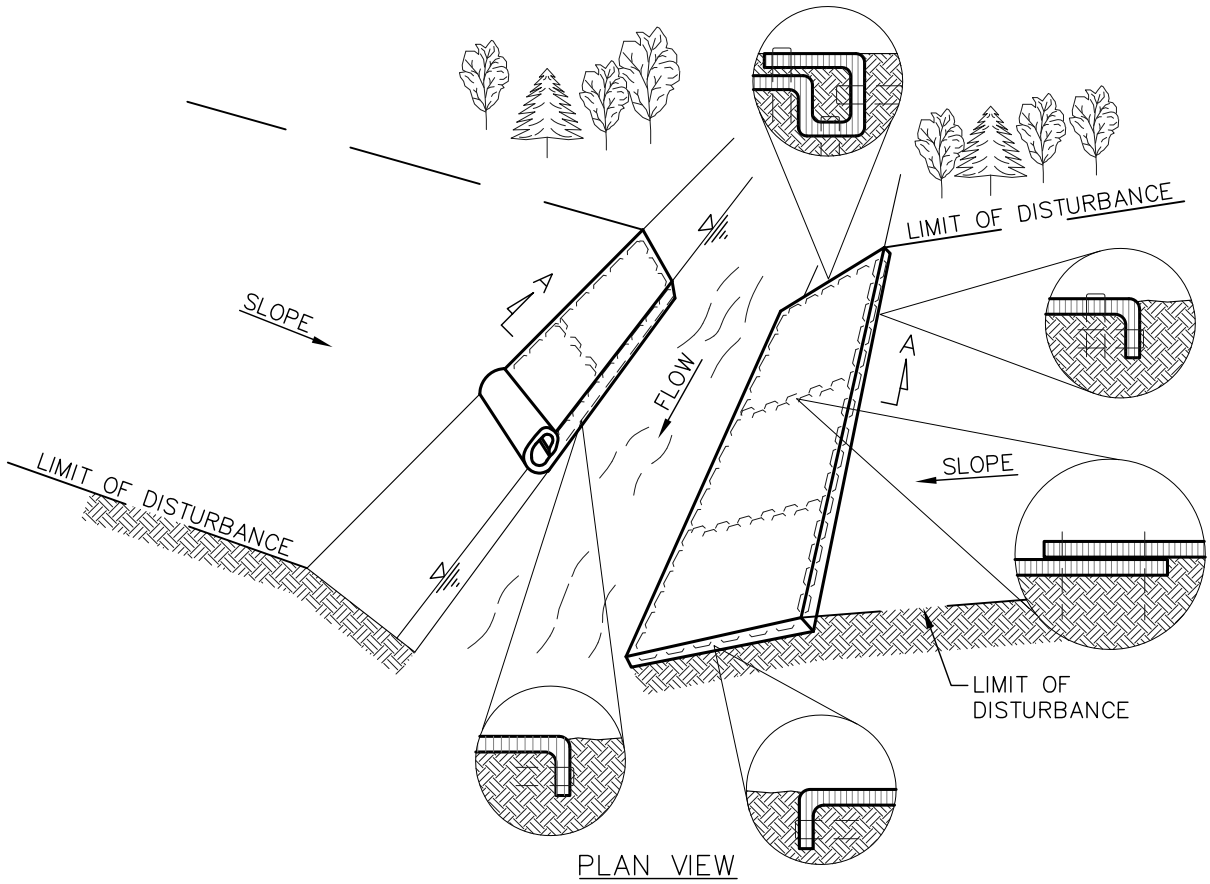

PLAN VIEW

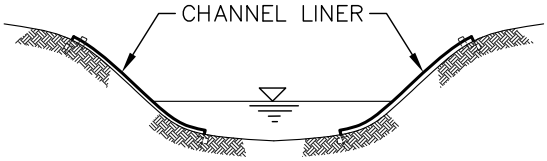

SECTION A–A

NOTES:

1. INSTALL AND ANCHOR LINERS FOLLOWING MANUFACTURER'S INSTRUCTIONS.
2. PREPARE SOIL BEFORE INSTALLING CHANNEL LINER, INCLUDING THE APPLICATION OF
3. SEED. CHANNEL LINERS SHOULD EXTEND COMPLETELY ACROSS DISTURBED BANK AREAS TO PROTECT ERODIBLE SURFACES.
4. BEGIN AT THE END OF THE CHANNEL BY ANCHORING THE LINER IN A TRENCH. BACKFILL AND COMPACT THE TRENCH AFTER STAPLING.
5. ROLL LINER IN DIRECTION OF WATER FLOW.
6. INSTALL LINERS END–OVER–END (SHINGLE STYLE) WITH OVERLAP USING A DOUBLE ROW OF STAGGERED STAPLES 4 INCHES BELOW THE FIRST ROW IN A STAGGERED PATTERN.
7. IN HIGH FLOW CHANNEL APPLICATIONS, A STAPLE CHECK SLOT IS RECOMMENDED AT 30 TO 40 FEET INTERVALS. USE A ROW OF STAPLES 4 INCHES BELOW THE FIRST ROW IN A STAGGERED PATTERN.
8. INSTALL CHANNEL LINER TO THE TOP OF THE DEFINED CHANNEL SECTION. TWO OR MORE ROWS OF BLANKETS MAY BE NECESSARY, THESE LINERS MUST BE OVERLAPPED 4 INCHES AND STAPLED.
9. THE CHANNEL LINER SHOULD EXTEND TO THE BASE OF THE CHANNEL AND STAPLED. FOR CHANNELS WITH VERY LITTLE OR NO FLOW, EXTEND A MINIMUM OF 1 FOOT BELOW THE LOW WATER LEVEL AND STAPLE IN PLACE.
10. INSTALLATION SPECIFICATIONS TO BE MODIFIED AS NECESSARY TO SUIT ACTUAL SITE CONDITIONS.

REVISIONS		
02	2010–10–11	REVISED TITLE BLOCK
01	2008–11–04	UPDATED DRAWING NOTES

2010–10–15 10:27am G:\2000DraftingandGIS\CADFiles\Drawings\PhaseIV_IFB\Erosion_Details_20081104.dwg Dan Tran

TransCanada
In business to deliver

PREPARED BY:
TROW ENGINEERING CONSULTANTS, INC.
2700 S. Post Oak Blvd., Suite 400
Houston, TX 77056
Phone: 1–713–693–6400
Fax: 1–713–693–6491
Trow

DESIGNER: JMP (NAME) 2008–09–08 (DATE)

CHECKED BY: WSF

DESIGN CHECKER: RW

P7100

KEYSTONE STEELE CITY (NPS 36 2011) PHILLIPS SECTION

FIA # 4359 | CHAINAGE: | DISCIPLINE # 03

TITLE

DETAIL 19
FLEXIBLE CHANNEL LINER INSTALLATION

SCALE N.T.S. | DWG No 4359–03–ML–05–708 | REV 02

TC_A4_BR.DWG 8.5X11

CADD DRAWING: DO NOT MAKE MANUAL REVISIONS

THESE ARE TYPICAL DRAWINGS; ACTUAL SITE CONDITIONS MAY VARY FROM THE SITE GRAPHICALLY REPRESENTED.

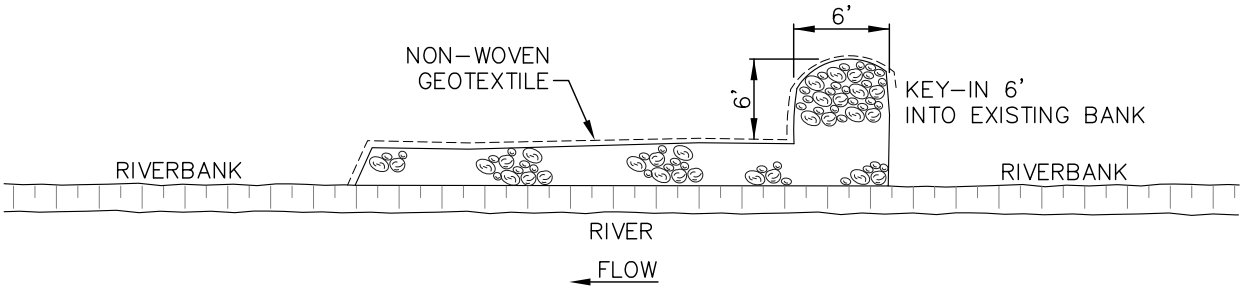

PLAN

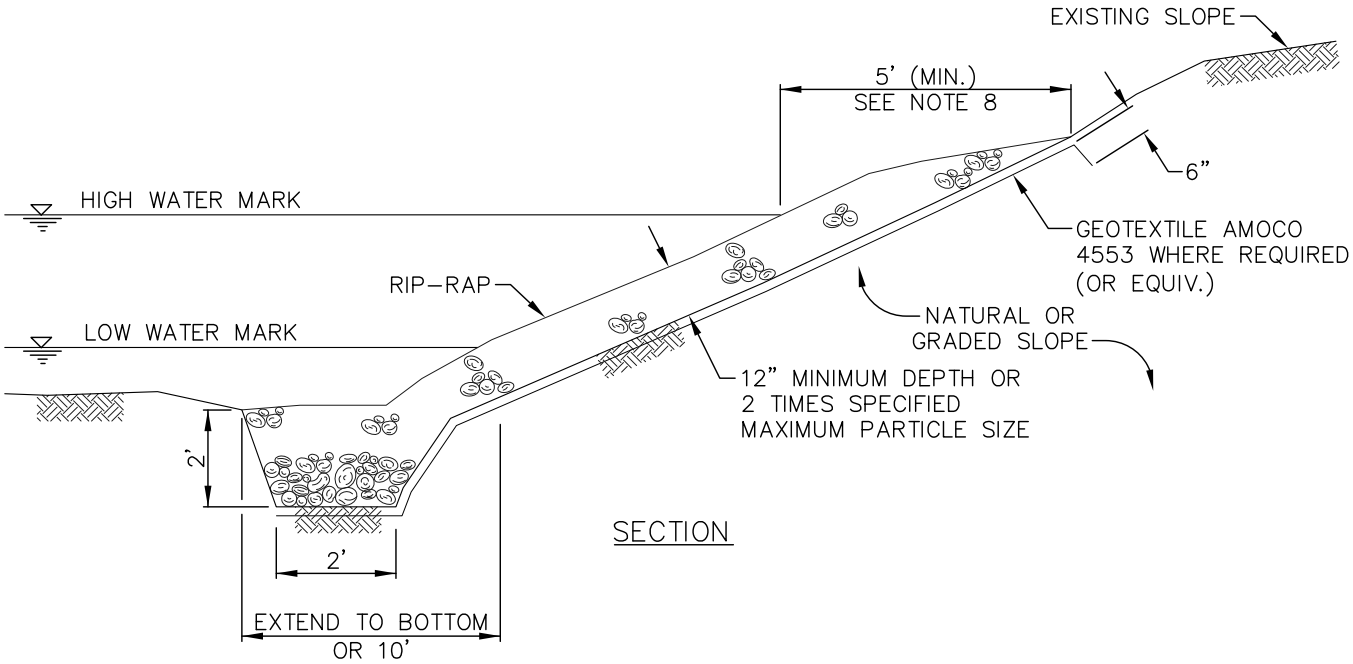

SECTION

NOTES:

1. REMOVE ALL STUMPS, ORGANIC MATERIAL AND PREPARE BANKS TO A STABLE CONFIGURATION TO A MAXIMUM SLOPE OF 2 HORIZONTAL TO 1 VERTICAL.
2. CONSTRUCT TOE TRENCH TO KEY IN BOTTOM OF RIP-RAP PROTECTION.
3. INSTALL FILTER CLOTH (GEOTEXTILE), SUCH AS AMOCO 4553 OR EQUIVALENT, UNDER ROCK WHERE SPECIFIED OR AS DIRECTED BY THE COMPANY. ADJOINING EDGES OF CLOTH SHALL OVERLAP A MINIMUM OF 12".
4. ROCK UTILIZED FOR RIP-RAP SHALL CONSIST OF SOUND, DURABLE ROCK, AND RESISTANT TO WEATHERING. INDIVIDUAL PIECES SHOULD BE ANGULAR, BLOCK SHAPED AND HAVE A MINIMUM SPECIFIC GRAVITY OF 2.2.
5. INSTALL RIP-RAP TO A THICKNESS OF APPROXIMATELY 2 TIMES THE MAXIMUM EQUIVALENT DIAMETER OF THE RIP-RAP. EACH LOAD SHOULD BE WELL GRADED. A WELL GRADED MIXTURE IS COMPOSED 60% (MINIMUM) OF LARGER SIZES WITH 40% OF SMALLER SIZES TO FILL THE VOIDS.
6. SIZE OF RIP-RAP IS DEPENDENT UPON THE PREDICTED FLOW CONDITIONS.
7. KEY IN THE EDGES OF THE RIP-RAP AND FILTER CLOTH TO NATURAL GROUND CONTOURS SO THAT UNDERMINING DOES NOT OCCUR.
8. RIP-RAP IS TO BE INSTALLED TO 2 FEET. ABOVE THE NORMAL HIGH WATER MARK OR 5 FEET ALONG THE SLOPE, WHICHEVER IS LESS.
9. INSTALLATION SPECIFICATIONS TO BE MODIFIED TO SUIT ACTUAL SITE CONDITIONS.

REVISIONS
01 2008-11-04 UPDATED DRAWING NOTES
02 2010-10-11 REVISED TITLE BLOCK

2010-10-15 10:29am G:\2000Draftingand GIS\CADFiles\Drawings\PhaseIV_IFB\Erosion_Details_20081104.dwg Dan Tran

TransCanada
In business to deliver

PREPARED BY:
TROW ENGINEERING CONSULTANTS, INC.
2700 S. Post Oak Blvd., Suite 400
Houston, TX 77056
Phone: 1-713-693-6400
Fax: 1-713-693-6491
Trow

DESIGNER: JMP (NAME) 2008-09-08 (DATE)

CHECKED BY: WSF

DESIGN CHECKER: RW P7100

KEYSTONE STEELE CITY (NPS 36 2011) PHILLIPS SECTION

FIA # 4359 | CHAINAGE: | DISCIPLINE # 03

TITLE

DETAIL 20
TYPICAL ROCK RIP-RAP

SCALE N.T.S. | DWG No 4359-03-ML-05-709 | REV 02

TC_A4_BR.DWG 8.5X11

CADD DRAWING: DO NOT MAKE MANUAL REVISIONS

THESE ARE TYPICAL DRAWINGS; ACTUAL SITE CONDITIONS MAY VARY FROM THE SITE GRAPHICALLY REPRESENTED.

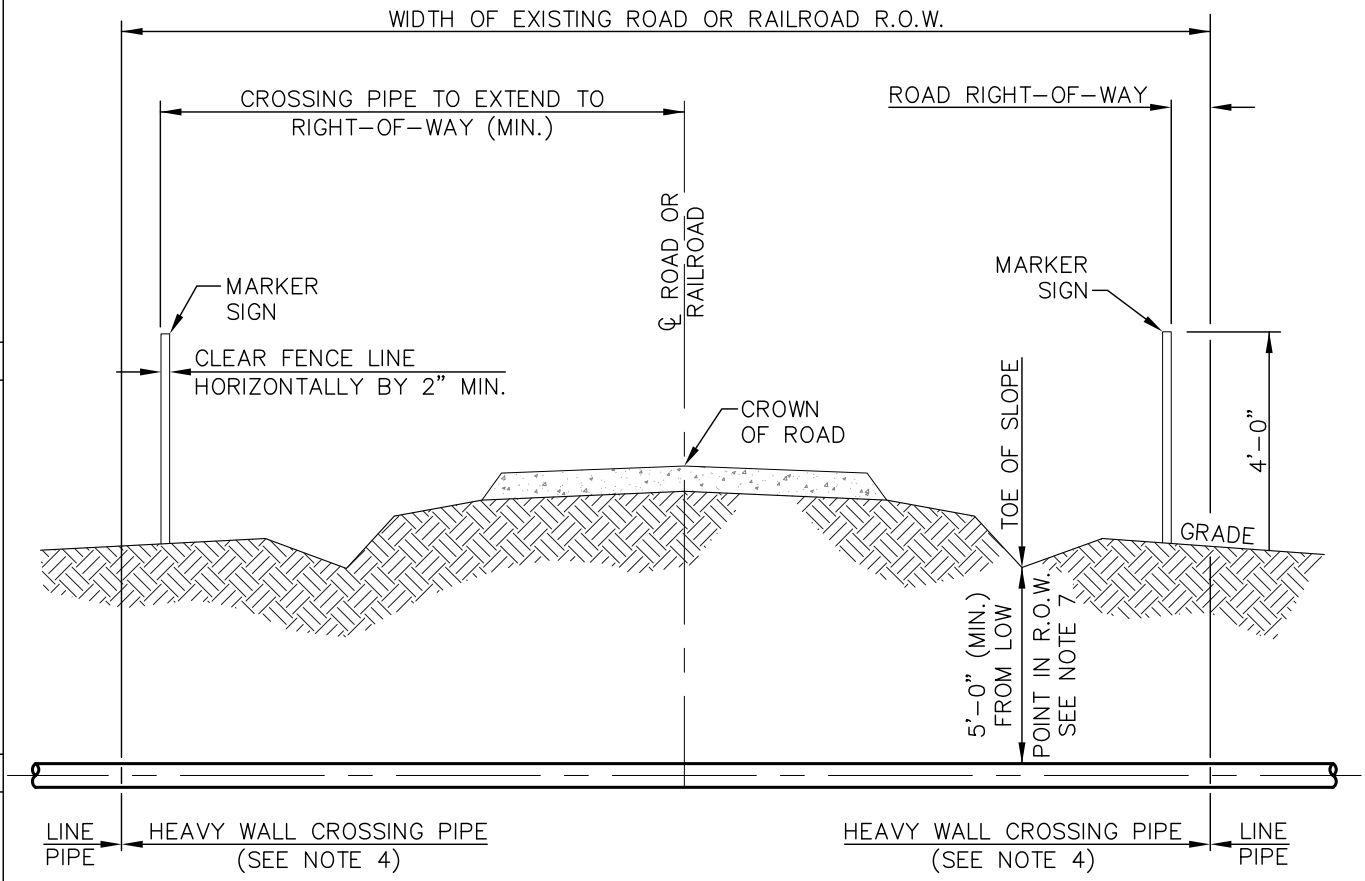

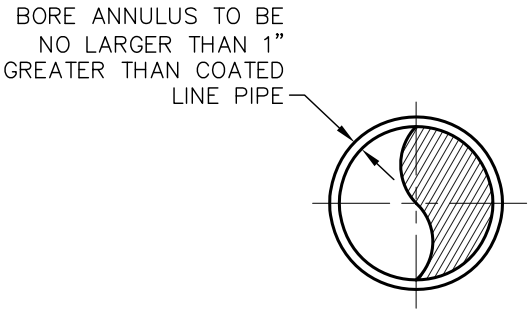

NOTES:

1. CROSSINGS SHALL BE IN ACCORDANCE WITH APPLICABLE PERMIT.
2. ROAD CROSSING PIPE SHALL EXTEND AT MINIMUM TO RIGHT-OF-WAY LINE UNLESS OTHERWISE SPECIFIED.
3. THE TYPE AND MINIMUM REQUIRED LENGTH OF PIPE FOR CROSSINGS OF ROADS SHALL BE AS SPECIFIED ON ALIGNMENT SHEETS.
4. PIPE FOR BORED CROSSINGS TO INCLUDE ABRASION-RESISTANT (ARB) COATING.
5. PIPELINE MARKER AND TEST STATIONS TO BE INSTALLED ON RIGHT-OF-WAY LINE NEXT TO FENCE IF POSSIBLE.
6. THE CROSSING PIPE SHALL BE STRAIGHT WITH NO VERTICAL OR HORIZONTAL BENDS WITHIN ROAD RIGHT-OF-WAY.
7. MINIMUM PIPELINE COVER IN DRAINAGE DITCHES AT PUBLIC ROADS IS 60 INCHES; 36 INCHES IN CONSOLIDATED ROCK.

REVISIONS
01 REVISED DIMENSION
02 2010-10-11 REVISED TITLE BLOCK

2010-10-15 10:31am G:\2000DraftingandGIS\CADFiles\Drawings\PhaseIV_IFB\Crossing_Details_20081104.dwg Dan Tran

TransCanada
In business to deliver

PREPARED BY:
TROW ENGINEERING CONSULTANTS, INC.
2700 S. Post Oak Blvd., Suite 400
Houston, TX 77056
Phone: 1-713-693-6400
Fax: 1-713-693-6491
Trow

DESIGNER: JMP (NAME) 2008-09-08 (DATE)

CHECKED BY: WSF

DESIGN CHECKER: RW P7100

KEYSTONE STEELE CITY (NPS 36 2011) PHILLIPS SECTION

FIA # 4359 | CHAINAGE: | DISCIPLINE # 03

TITLE
DETAIL 21
TYPICAL UNCASED ROAD/RAILROAD CROSSING BORE DETAIL

SCALE N.T.S. | DWG No 4359-03-ML-03-717 | REV 02

TC_A4_BR.DWG 8.5X11

CADD DRAWING: DO NOT MAKE MANUAL REVISIONS

THESE ARE TYPICAL DRAWINGS; ACTUAL SITE CONDITIONS MAY VARY FROM THE SITE GRAPHICALLY REPRESENTED.

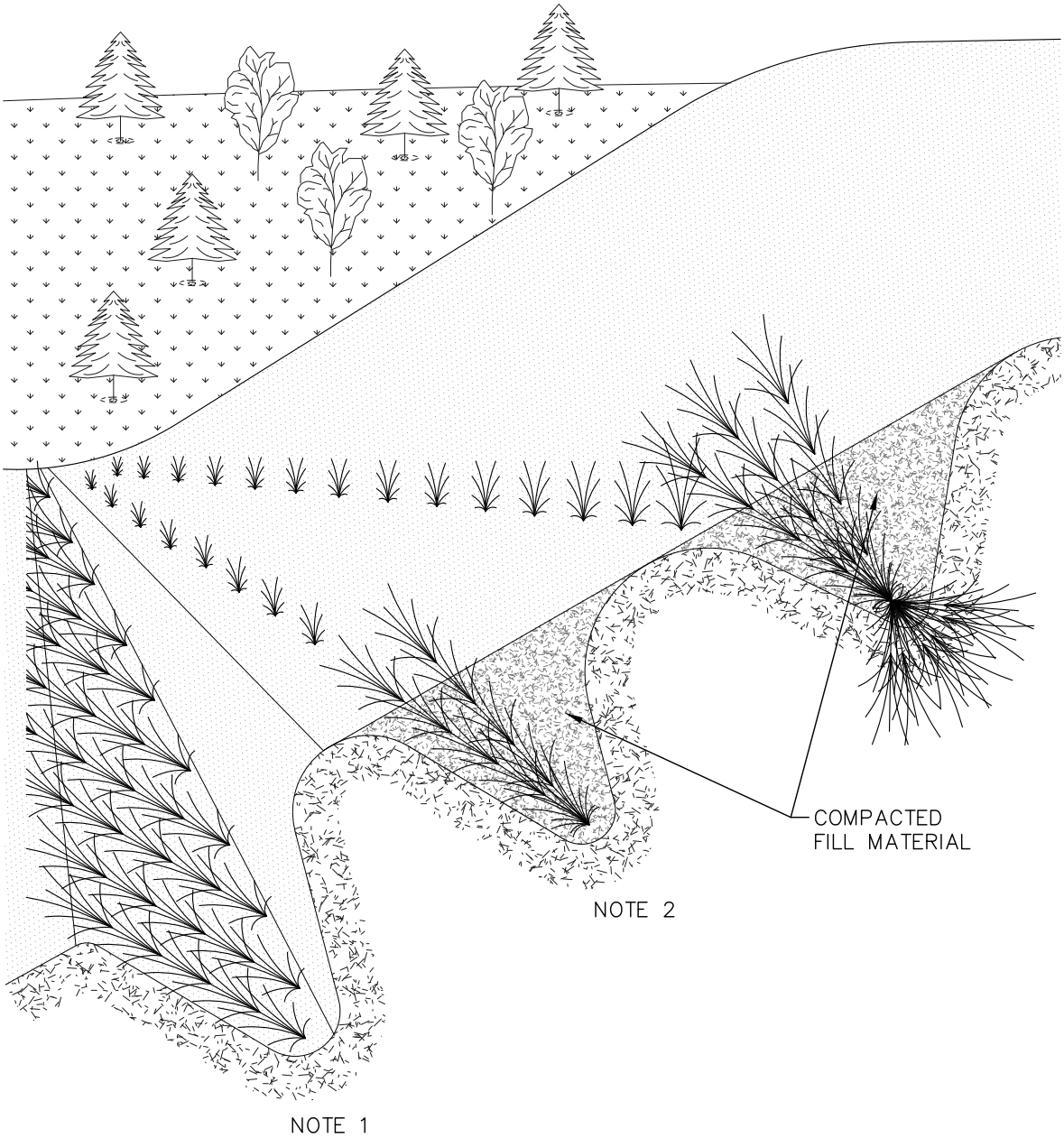

NOTES:

1. CUT TRENCH ACROSS SLOPE. FILL WITH DORMANT WOODY PLANT MATERIAL.
2. FILL IS PLACED ON TOP OF BRANCH LAYER AND COMPACTED.
3. INSTALLATION SPECIFICATIONS TO BE MODIFIED AS NECESSARY TO SUIT SITE CONDITIONS.

REVISIONS		
01	2008-11-04	UPDATED DRAWING NOTES
02	2010-10-11	REVISED TITLE BLOCK

2010-10-15 10:33am G:\2000DraftingandGIS\CADFiles\Drawings\PhaseIV_IFB\Erosion_Details_20081104.dwg Dan Tran

TransCanada
In business to deliver

PREPARED BY:
TROW ENGINEERING CONSULTANTS, INC.
2700 S. Post Oak Blvd., Suite 400
Houston, TX 77056
Phone: 1-713-693-6400
Fax: 1-713-693-6491
Trow

DESIGNER: JMP (NAME) 2008-09-08 (DATE)

CHECKED BY: WSF

DESIGN CHECKER: RW P7100

KEYSTONE STEELE CITY (NPS 36 2011) PHILLIPS SECTION

FIA # 4359 | CHAINAGE: | DISCIPLINE # 03

TITLE
DETAIL 22
STREAMBANK RECLAMATION –
BRUSH LAYER IN CROSS CUT SLOPE

SCALE N.T.S. | DWG No 4359-03-ML-05-710 | REV 02

TC_A4_BR.DWG 8.5X11

CADD DRAWING: DO NOT MAKE MANUAL REVISIONS

THESE ARE TYPICAL DRAWINGS; ACTUAL SITE CONDITIONS MAY VARY FROM THE SITE GRAPHICALLY REPRESENTED.

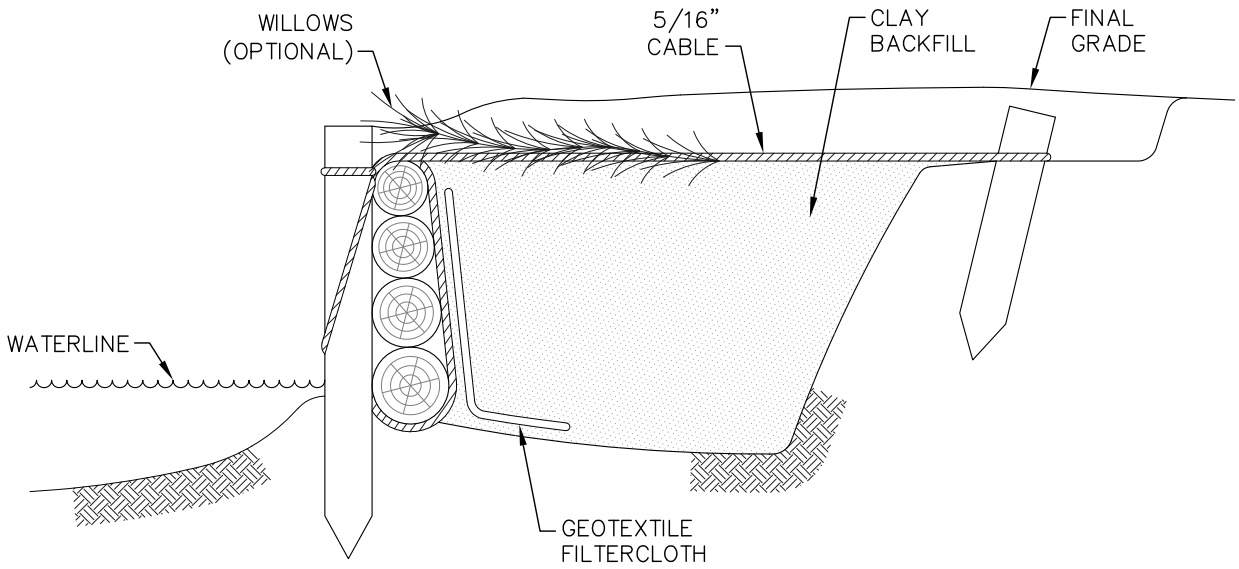

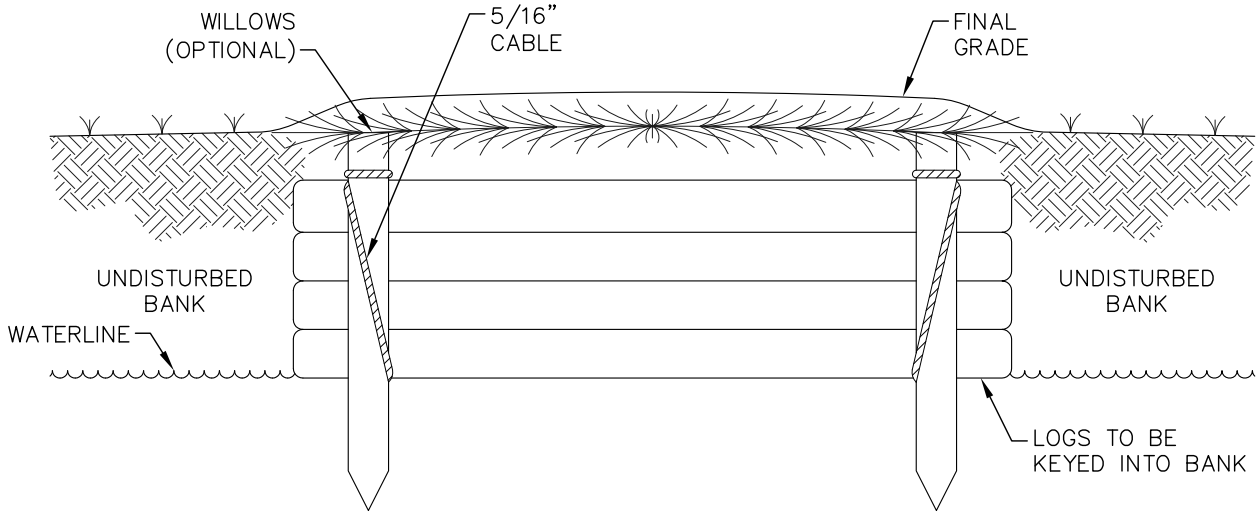

NOTES:

1. LOG WALLS TO BE CONSTRUCTED USING CONIFEROUS MATERIAL.
2. NATURE BACKFILL OR LOOSE GRADE MATERIAL SHOULD BE USED AS FILL MATERIAL.
3. ANCHOR PILINGS OR DEADMAN ANCHORS TO BE USED TO SECURE CABLE IN BANK.
4. NON-WOVEN FILTER CLOTH (NYLEX C34 OR EQUIVALENT) TO BE USED TO LINE LOG WALL.
5. INSTALLATION SPECIFICATIONS TO BE MODIFIED AS NECESSARY TO SUIT ACTUAL SITE CONDITIONS.

REVISIONS		
01	2008-11-04	UPDATED DRAWING NOTES
02	2010-10-11	REVISED TITLE BLOCK

2010-10-15 10:40am G:\2000DraftingandGIS\CADFiles\Drawings\PhaseIV_IFB\Erosion_Details_20081104.dwg Dan Tran

TransCanada
In business to deliver

PREPARED BY:
TROW ENGINEERING CONSULTANTS, INC.
2700 S. Post Oak Blvd., Suite 400
Houston, TX 77056
Phone: 1-713-693-6400
Fax: 1-713-693-6491
Trow

DESIGNER: JMP (NAME) 2008-09-08 (DATE)

CHECKED BY: WSF

DESIGN CHECKER: RW P7100

KEYSTONE STEELE CITY (NPS 36 2011) PHILLIPS SECTION

FIA # 4359 | CHAINAGE: | DISCIPLINE # 03

TITLE

DETAIL 23
STREAMBANK RECLAMATION – LOGWALL

SCALE N.T.S. | DWG No 4359-03-ML-05-711 | REV 02

TC_A4_BR.DWG 8.5X11

CADD DRAWING: DO NOT MAKE MANUAL REVISIONS

THESE ARE TYPICAL DRAWINGS; ACTUAL SITE CONDITIONS MAY VARY FROM THE SITE GRAPHICALLY REPRESENTED.

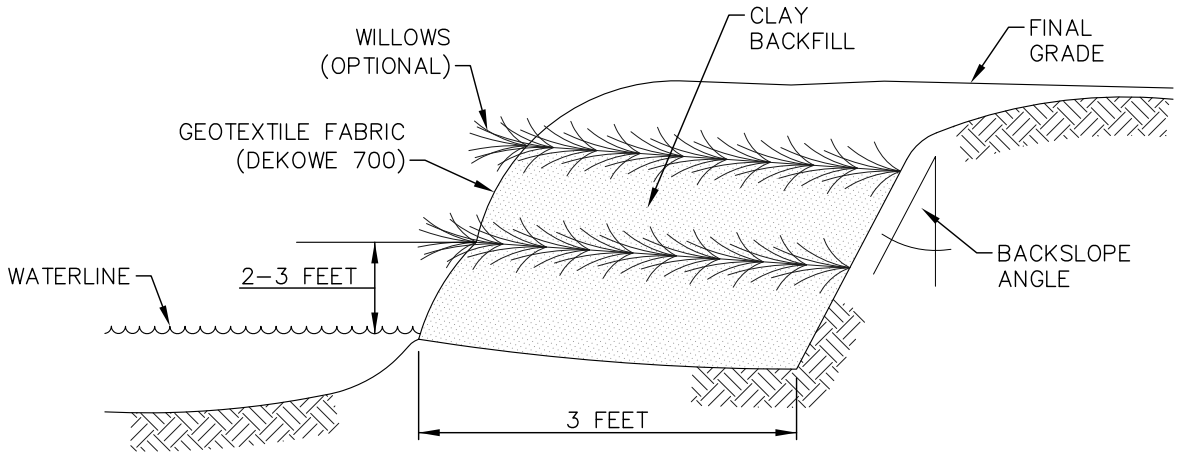

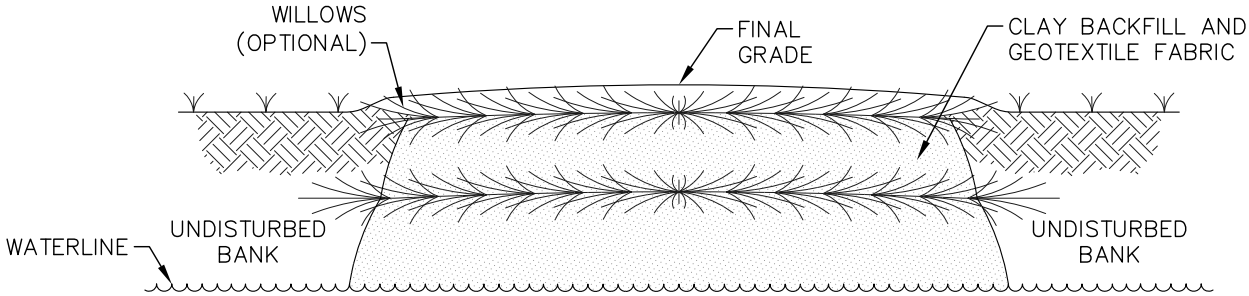

NOTES:

1. NATURE BACKFILL OR LOOSE GRADE MATERIAL SHOULD BE USED TO MINIMIZE AIR SPACES. THIS ALLOWS PROPER SOIL FABRIC CONTACT, WHICH MINIMIZES STEELING AND SCOURING DURING RUNOFF AND ENSURES SURVIVAL OF THE WILLOW CUTTINGS.
2. PLYWOOD FORMS (8'x2') MAY BE REQUIRED TO HELP RECONSTRUCT STEEP OR VERTICAL BANKS.
3. GRID LAYERS SHOULD NOT EXCEED 3 FEET IN HEIGHT WITH A MINIMUM OF 3 FEET SET IN BANK.
4. WILLOWS SHOULD BE HARVESTED AS CLOSE TO INSTALLATION AS POSSIBLE, PREFERABLY THE PREVIOUS DAY BUT NO MORE THAN 2 DAYS EARLY.
5. WILLOWS SHOULD BE 0.5 TO 1 INCH IN DIAMETER AND 2 TO 3 FEET LONG WITH NO MORE THAN 10 INCHES LEFT EXPOSED.
6. PLANTING RATE SHOULD BE APPROXIMATELY 1 STEM PER 6 INCHES.
7. INSTALLATION TO BE MODIFIED AS NECESSARY TO SUIT ACTUAL SITE CONDITIONS.

REVISIONS
01 2008–11–04 UPDATED DRAWING NOTES
02 2010–10–11 REVISED TITLE BLOCK

2010–10–15 10:41am G:\2000DraftingandGIS\CADFiles\Drawings\PhaseIV_IFB\Erosion_Details_20081104.dwg Dan Tran

TransCanada
In business to deliver

PREPARED BY:
TROW ENGINEERING CONSULTANTS, INC.
2700 S. Post Oak Blvd., Suite 400
Houston, TX 77056
Phone: 1–713–693–6400
Fax: 1–713–693–6491
Trow

DESIGNER: JMP (NAME) 2008–09–08 (DATE)

CHECKED BY: WSF

DESIGN CHECKER: RW

P7100

KEYSTONE STEELE CITY (NPS 36 2011) PHILLIPS SECTION

FIA # 4359 | CHAINAGE: | DISCIPLINE # 03

TITLE
DETAIL 24
STREAMBANK RECLAMATION –
VEGETATED GEOTEXTILE INSTALLATION

SCALE N.T.S. | DWG No 4359–03–ML–05–712 | REV 02

TC_A4_BR.DWG 8.5X11

CADD DRAWING: DO NOT MAKE MANUAL REVISIONS

THESE ARE TYPICAL DRAWINGS; ACTUAL SITE CONDITIONS MAY VARY FROM THE SITE GRAPHICALLY REPRESENTED.

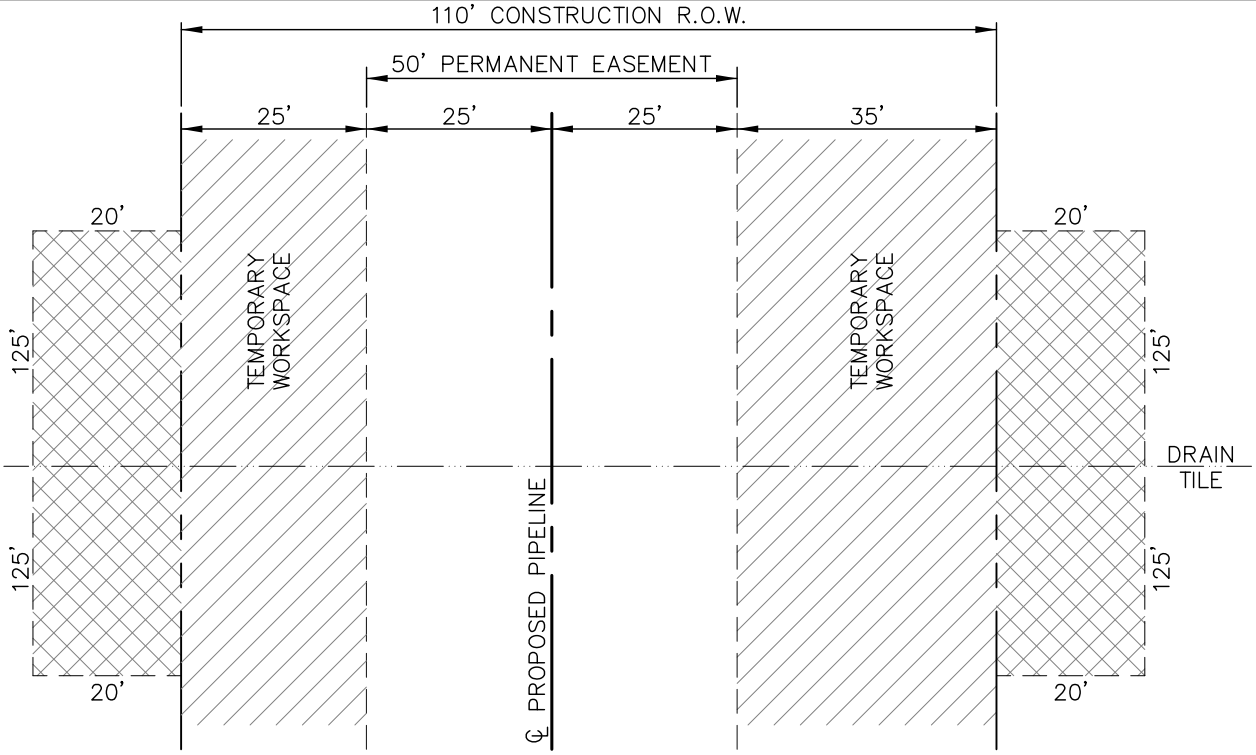

PLAN VIEW

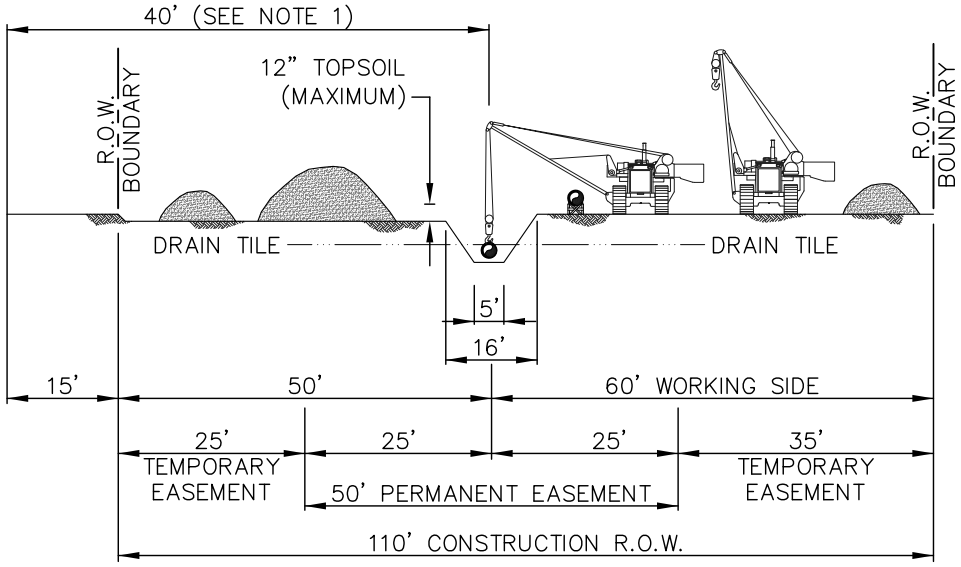

ELEVATION

NOTES:

1. THE OFFSET FROM A FOREIGN PIPELINE, WHERE APPLICABLE, WILL BE 40' FOR MOST LOCATIONS, BUT MAY BE INCREASED OR DECREASED DEPENDING ON THE SITE SPECIFIC CONSTRUCTION REQUIREMENTS.
2. THE MINIMUM CLEARANCE BETWEEN THE TOP OF PIPE AND THE BOTTOM OF DRAIN TILE WILL BE 12 INCHES.
3. INSTALLATION SPECIFICATIONS TO BE MODIFIED AS NECESSARY TO SUIT ACTUAL SITE CONDITIONS.

REVISIONS
01 REVISED NOTE 3; DELETED DIMENSION
02 2010-10-11 REVISED TITLE BLOCK

2010-10-15 10:43am G:\2000DraftingandGIS\CADFiles\Drawings\PhaseIV_IFB\Crossing_Details_20081104.dwg Dan Tran

TransCanada
In business to deliver

PREPARED BY:
TROW ENGINEERING CONSULTANTS, INC.
2700 S. Post Oak Blvd., Suite 400
Houston, TX 77056
Phone: 1-713-693-6400
Fax: 1-713-693-6491
Trow

DESIGNER: JMP (NAME) 2008-09-08 (DATE)
CHECKED BY: WSF
DESIGN CHECKER: RW P7100

KEYSTONE STEELE CITY (NPS 36 2011) PHILLIPS SECTION

FIA # 4359	CHAINAGE:	DISCIPLINE # 03

TITLE
DETAIL 25
TYPICAL R.O.W. LAYOUT/SOIL HANDLING
110' CONSTRUCTION R.O.W. 50' EASEMENT
DRAIN TILE CROSSING

SCALE N.T.S.	DWG No 4359-03-ML-03-718	REV 02

TC_A4_BR.DWG 8.5X11

CADD DRAWING: DO NOT MAKE MANUAL REVISIONS

THESE ARE TYPICAL DRAWINGS; ACTUAL SITE CONDITIONS MAY VARY FROM THE SITE GRAPHICALLY REPRESENTED.

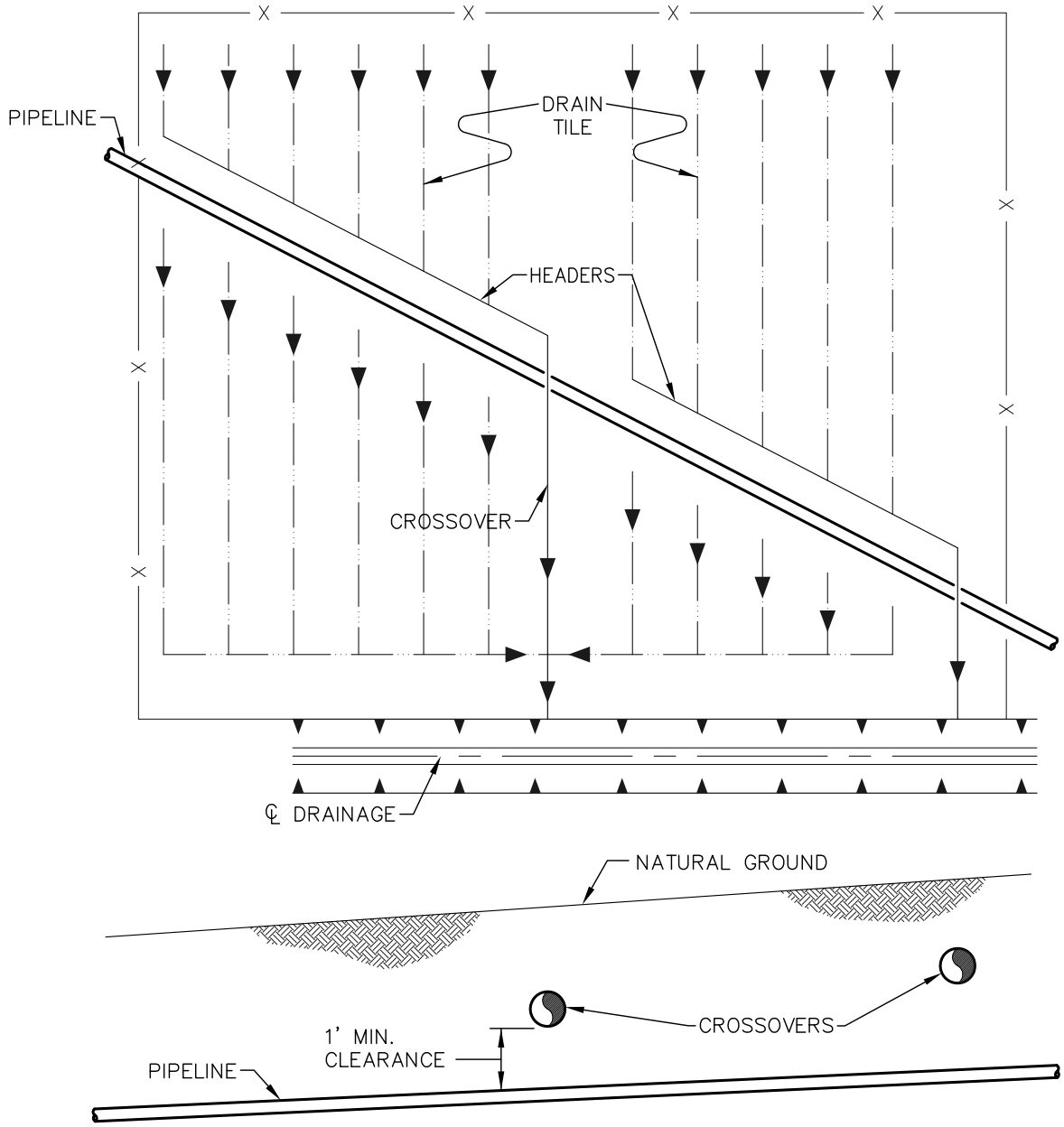

PROFILE

REVISIONS		
01	ADDED DIMENSION	2010-10-15 10:46am G:\2000DraftingandGIS\CADFiles\Drawings\PhaseIV_IFB\Crossing_Details_20081104.dwg Dan Tran
02	2010-10-11 REVISED TITLE BLOCK	

TransCanada
In business to deliver

PREPARED BY:
TROW ENGINEERING CONSULTANTS, INC.
2700 S. Post Oak Blvd., Suite 400
Houston, TX 77056
Phone: 1-713-693-6400
Fax: 1-713-693-6491
Trow

DESIGNER: JMP (NAME) 2008-09-08 (DATE)

CHECKED BY: WSF

DESIGN CHECKER: RW P7100

KEYSTONE STEELE CITY (NPS 36 2011) PHILLIPS SECTION

FIA # 4359 | CHAINAGE: | DISCIPLINE # 03

TITLE
DETAIL 26
HEADER/MAIN CROSSOVERS OF PIPELINE

SCALE N.T.S. | DWG No 4359-03-ML-03-719 | REV 02

TC_A4_BR.DWG 8.5X11

CADD DRAWING: DO NOT MAKE MANUAL REVISIONS

THESE ARE TYPICAL DRAWINGS; ACTUAL SITE CONDITIONS MAY VARY FROM THE SITE GRAPHICALLY REPRESENTED.

RELOCATE/REPLACE DRAINAGE HEADER/MAIN

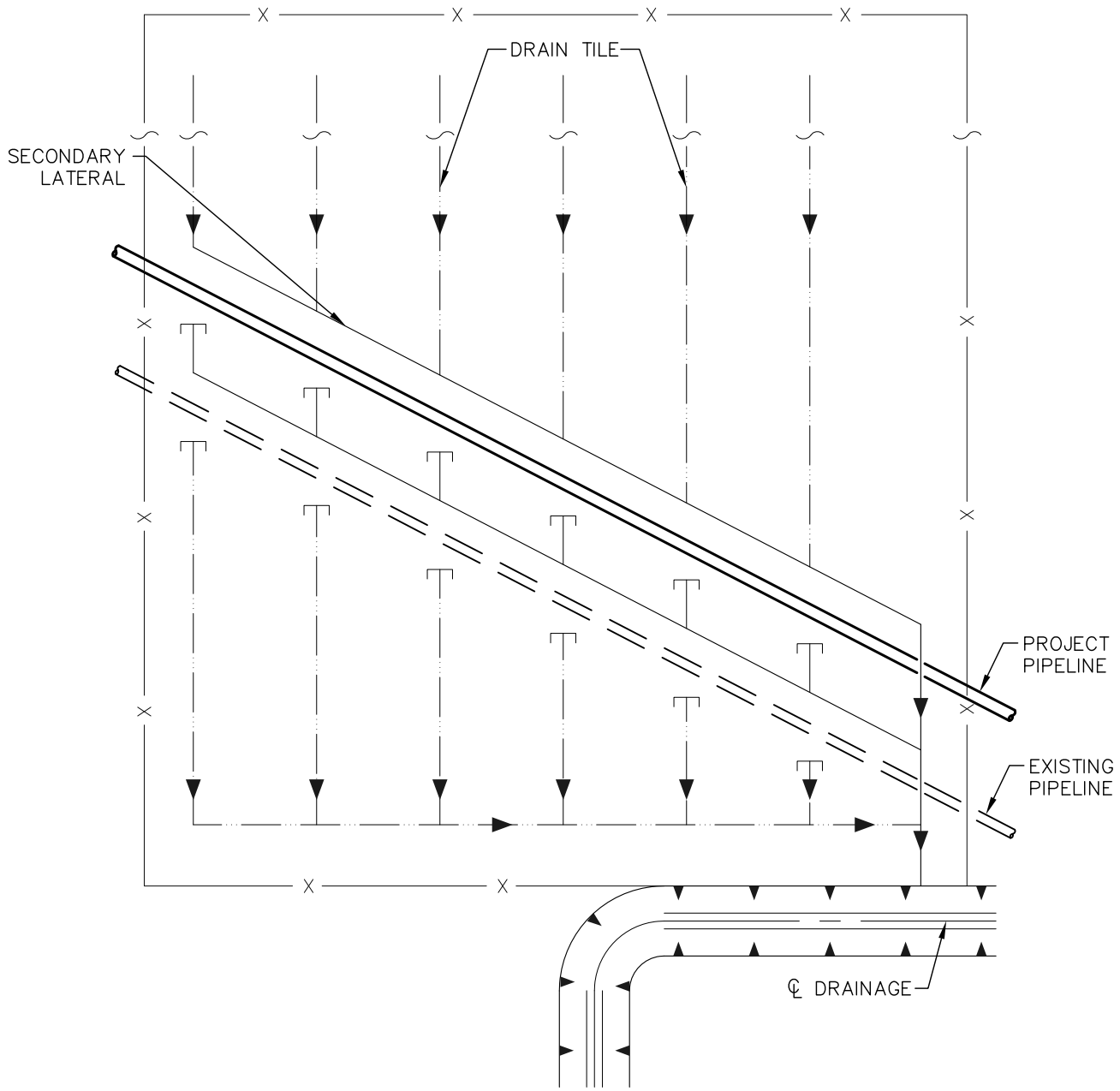

REVISIONS		
01	REVISED LABELS	
02	2010-10-11 REVISED TITLE BLOCK	

2010-10-15 10:46am G:\2000DraftingandGIS\CADFiles\Drawings\PhaseIV_IFB\Crossing_Details_20081104.dwg Dan Tran

TransCanada
In business to deliver

PREPARED BY:
TROW ENGINEERING CONSULTANTS, INC.
2700 S. Post Oak Blvd., Suite 400
Houston, TX 77056
Phone: 1-713-693-6400
Fax: 1-713-693-6491
Trow

DESIGNER: JMP (NAME) 2008-09-08 (DATE)

CHECKED BY: WSF

DESIGN CHECKER: RW P7100

KEYSTONE STEELE CITY (NPS 36 2011) PHILLIPS SECTION

FIA # 4359 | CHAINAGE: | DISCIPLINE # 03

TITLE

DETAIL 27
HEADER/MAIN CROSSOVERS OF PIPELINE

SCALE N.T.S. | DWG No 4359-03-ML-03-720 | REV 02

TC_A4_BR.DWG 8.5X11

CADD DRAWING: DO NOT MAKE MANUAL REVISIONS

THESE ARE TYPICAL DRAWINGS; ACTUAL SITE CONDITIONS MAY VARY FROM THE SITE GRAPHICALLY REPRESENTED.

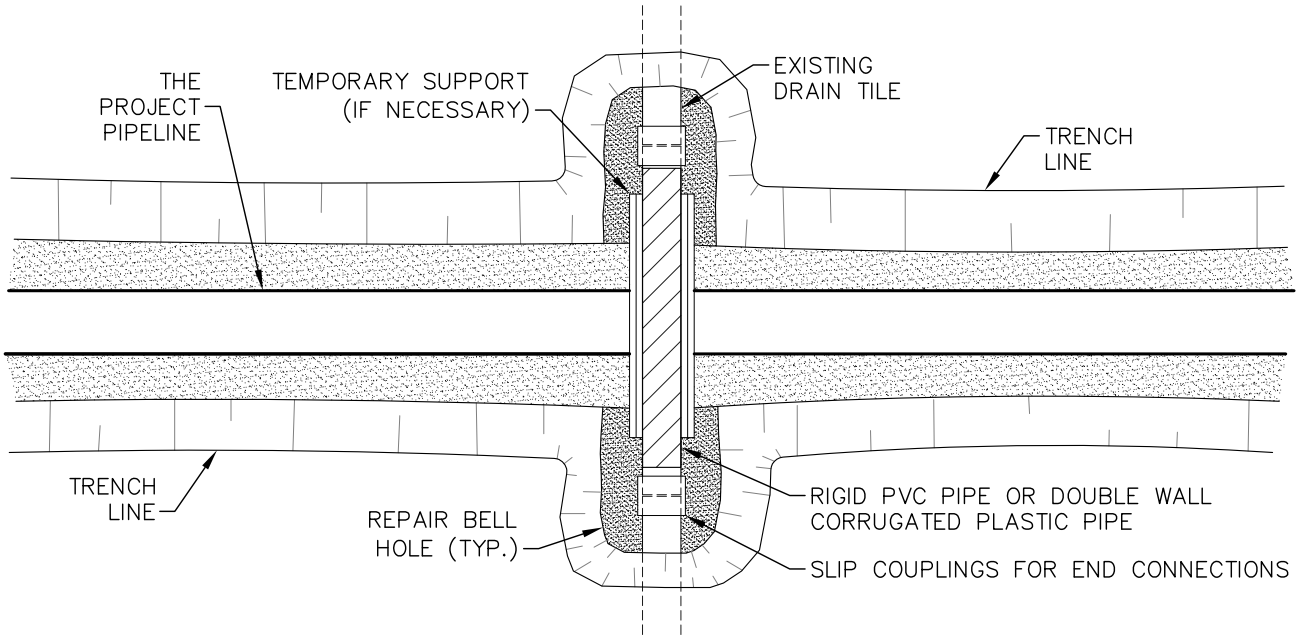

PLAN

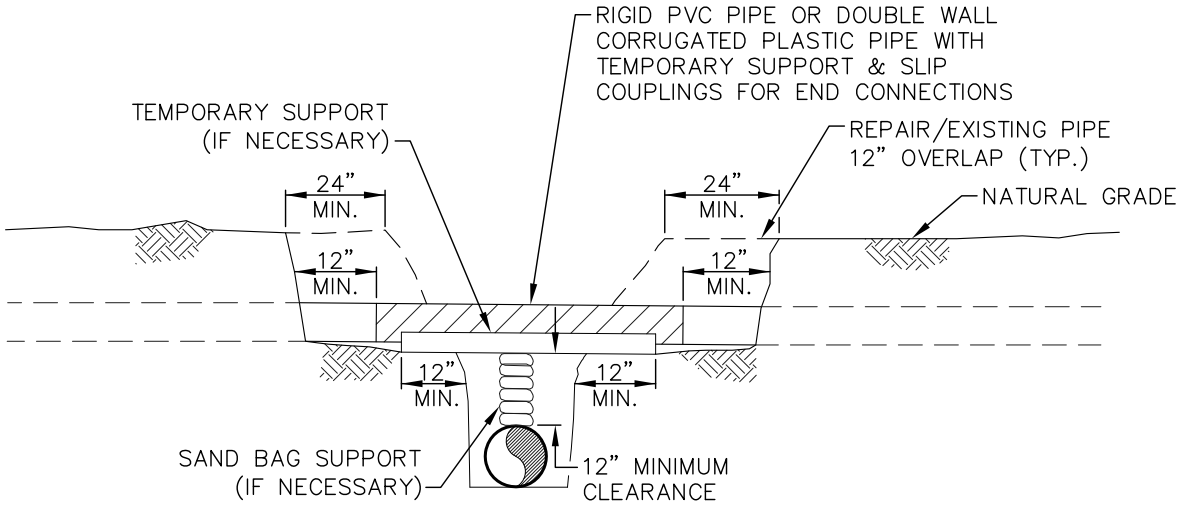

PROFILE

NOTES:

1. IMMEDIATELY REPAIR TILE IF WATER IS FLOWING THROUGH TILE AT TIME OF TRENCHING.
2. SCREEN ALL EXPOSED ENDS OF TILE LINES.

REVISIONS		
01	2008-11-04	UPDATED DRAWING NOTES
02	2010-10-11	REVISED TITLE BLOCK

2010-10-15 10:48am G:\2000DraftingandGIS\CADFiles\Drawings\PhaseIV_IFB\Erosion_Details_20081104.dwg Dan Tran

TransCanada
In business to deliver

PREPARED BY:
TROW ENGINEERING CONSULTANTS, INC.
2700 S. Post Oak Blvd., Suite 400
Houston, TX 77056
Phone: 1-713-693-6400
Fax: 1-713-693-6491
Trow

DESIGNER: JMP (NAME) 2008-09-08 (DATE)

CHECKED BY: WSF

DESIGN CHECKER: RW P7100

KEYSTONE STEELE CITY (NPS 36 2011) PHILLIPS SECTION

FIA # 4359 | CHAINAGE: | DISCIPLINE # 03

TITLE: DETAIL 28
DRAINAGE AND IRRIGATION
TEMPORARY DRAIN TILE REPAIR

SCALE N.T.S. | DWG No 4359-03-ML-03-721 | REV 02

TC_A4_BR.DWG 8.5X11

CADD DRAWING: DO NOT MAKE MANUAL REVISIONS

THESE ARE TYPICAL DRAWINGS; ACTUAL SITE CONDITIONS MAY VARY FROM THE SITE GRAPHICALLY REPRESENTED.

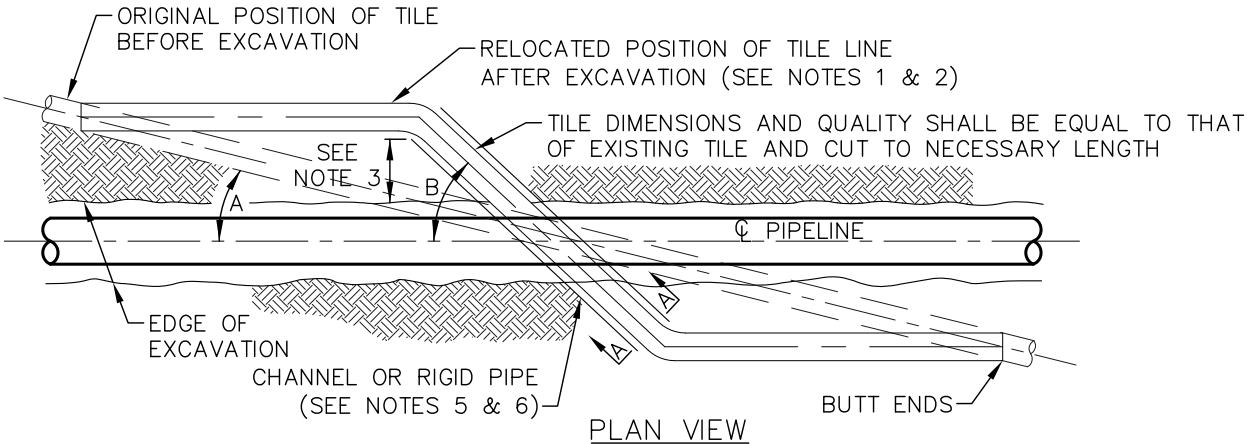

PLAN VIEW

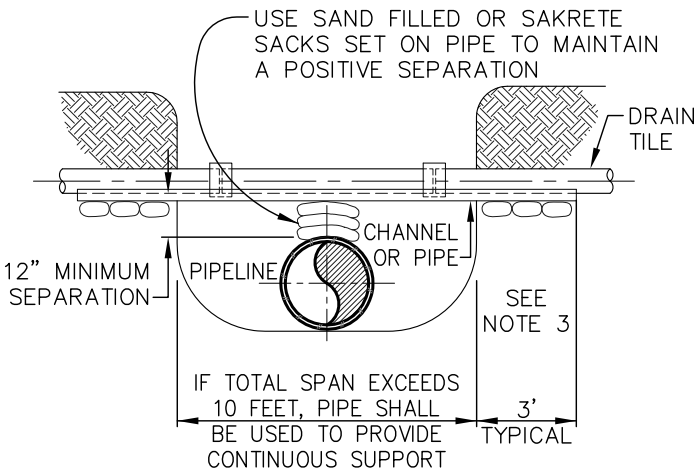

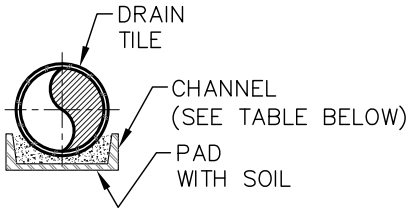

SECTION "A–A" CHANNEL (SPANS < 10 FEET)

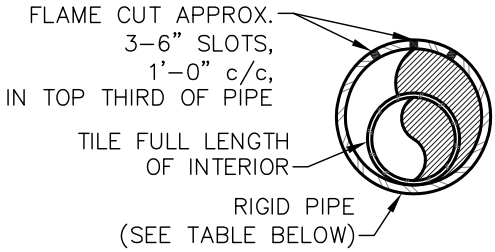

END VIEWS

SECTION "A–A" RIGID PIPE (SPANS > 10 FEET)

NOTES:

1. TILE REPAIR SHALL MAINTAIN ORIGINAL ALIGNMENT AND GRADIENT WHEN ANGLE "A", BETWEEN PIPELINE AND ORIGINAL TILE, IS MORE THAN 20 FEET UNLESS OTHERWISE DIRECTED BY THE PROJECT REPRESENTATIVE.
2. WHEN ANGLE "A" IS LESS THAN 20 FEET, UNLESS OTHERWISE DIRECTED BY COMPANY, ANGLE "B" SHALL BE 45° FOR USUAL WIDTHS OF TRENCH. FOR EXTRA WIDTHS, IT MAY BE GREATER AS DIRECTED BY THE PROJECT REPRESENTATIVE.
3. 3 FOOT MINIMUM LENGTH OF CHANNEL OR RIGID PIPE SHALL BE SUPPORTED BY UNDISTURBED SOIL, OR IF CROSSING IS NOT AT RIGHT ANGLES TO GAS PIPELINE, EQUIVALENT LENGTH PERPENDICULAR TO TRENCH. SHIM WITH SAKRETE, SAND BAGS OR CONCRETE BLOCKS TO UNDISTURBED SOIL FOR SUPPORT AND DRAINAGE GRADIENT MAINTENANCE (TYPICAL BOTH SIDES).
4. DRAINAGE TILE SHALL BE REPLACED SO THAT ITS FORMER GRADIENT AND ALIGNMENT ARE RESTORED.
5. DIAMETER OF RIGID PIPE SHALL BE OF ADEQUATE SIZE TO ALLOW FOR THE INSTALLATION OF THE TILE FOR THE FULL LENGTH OF THE RIGID PIPE.
6. OTHER METHODS OF SUPPORTING DRAIN TILE MAY BE USED IF THE ALTERNATE PROPOSED IS EQUIVALENT IN STRENGTH TO THE CHANNEL/PIPE SECTIONS SHOWN AND IF APPROVED BY THE PROJECT REPRESENTATIVE IN ADVANCE. SITE SPECIFIC ALTERNATE SUPPORT SYSTEM TO BE DEVELOPED BY THE PROJECT REPRESENTATIVE AND FURNISHED TO CONTRACTOR FOR SPANS IN EXCESS OF 20 FEET, TILE GREATER THAN 10 INCHES DIAMETER, AND FOR HEADER SYSTEMS.
7. ALL MATERIAL TO BE FURNISHED BY CONTRACTOR.
8. PRIOR TO REPAIRING TILE, CONTRACTOR SHALL PROBE INTO THE EXISTING TILE TO THE FULL WIDTH OF THE RIGHT–OF–WAY TO DETERMINE IF ADDITIONAL DAMAGE HAS OCCURRED. ALL DAMAGED/DISTURBED TILE SHALL BE REPAIRED AS NEAR AS PRACTICABLE TO ITS ORIGINAL OR BETTER CONDITION.
9. "NIGHT CAP" OPEN ENDS OF PIPE AND/OR DRAIN TILES IF REPAIRS ARE NOT COMPLETED BY END OF WORK DAY.

MINIMUM SUPPORT TABLE

TILE SIZE	CHANNEL SIZE	PIPE SIZE
3"	4" @ 5.4 #/FT.	4" STD. WT
4"–5"	5" @ 6.7 #/FT.	6" STD. WT
6"–9"	7" @ 9.8 #/FT.	8"–10" STD. WT
10"	10" @ 15.3 #/FT.	12" STD. WT

REVISIONS
01 2008–11–04 UPDATED DRAWING NOTES
02 2010–10–11 REVISED TITLE BLOCK

2010–10–15 10:49am G:\2000DraftingandGIS\CADFiles\Drawings\PhaseIV_IFB\Erosion_Details_20081104.dwg Dan Tran

TransCanada
In business to deliver

PREPARED BY:
TROW ENGINEERING CONSULTANTS, INC.
2700 S. Post Oak Blvd., Suite 400
Houston, TX 77056
Phone: 1–713–693–6400
Fax: 1–713–693–6491
Trow

DESIGNER: JMP (NAME) 2008–09–08 (DATE)
CHECKED BY: WSF
DESIGN CHECKER: RW
P7100

KEYSTONE STEELE CITY (NPS 36 2011) PHILLIPS SECTION

FIA # 4359 | CHAINAGE: | DISCIPLINE # 03

TITLE
DETAIL 29
DRAINAGE AND IRRIGATION
PERMANENT DRAIN TILE REPAIR

SCALE N.T.S. | DWG No 4359–03–ML–03–722 | REV 02

TC_A4_BR.DWG 8.5X11

CADD DRAWING: DO NOT MAKE MANUAL REVISIONS

THESE ARE TYPICAL DRAWINGS; ACTUAL SITE CONDITIONS MAY VARY FROM THE SITE GRAPHICALLY REPRESENTED.

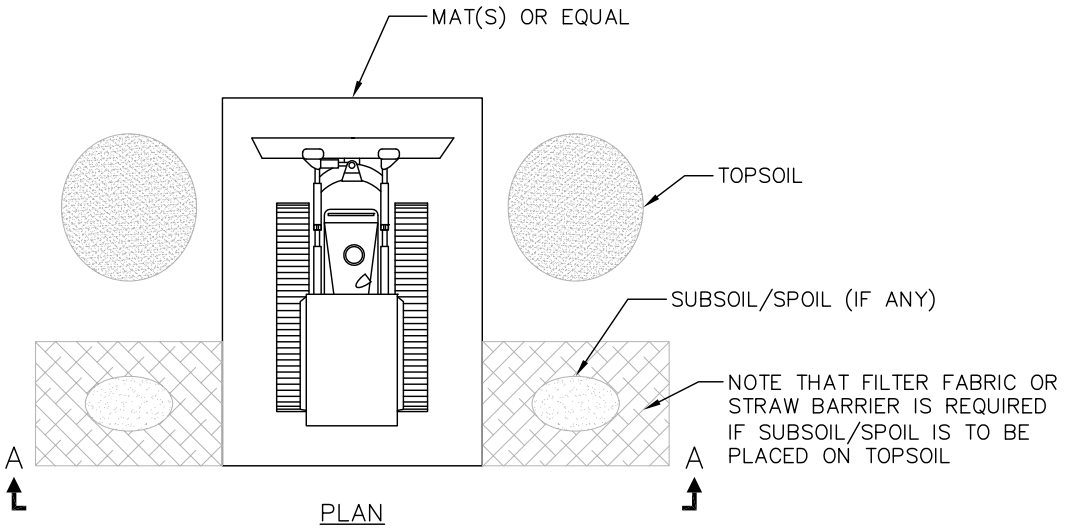

PLAN

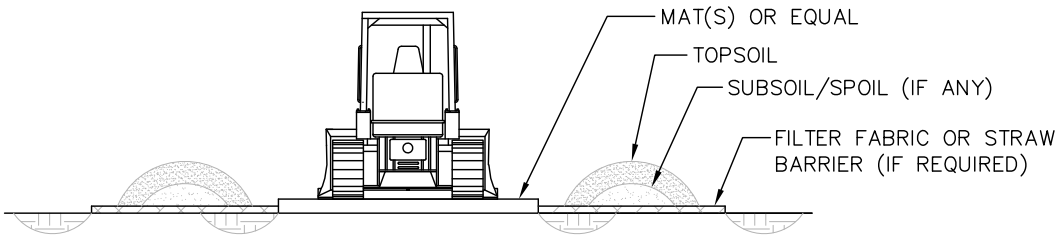

SECTION A–A

CLEANING STATION NOTES:

1. ALL EQUIPMENT WILL BE REQUIRED TO BE CLEANED AT EQUIPMENT CLEANING STATIONS LOCATED AS SHOWN ON THE CONSTRUCTION DRAWINGS OR AS DIRECTED BY THE ENVIRONMENTAL INSPECTOR.
2. STOCKPILE TOPSOIL/SUBSOIL AS SHOWN OR IN ANY CONFIGURATION APPROVED BY THE ENVIRONMENTAL INSPECTOR.
3. SHOVELS OR OTHER HAND TOOLS AND/OR COMPRESSED AIR WILL BE USED TO REMOVE AS MUCH AS MUCH SOIL AS PRACTICAL FROM TRACKED EQUIPMENT. EFFORT WILL BE FOCUSED ON TRACKS AND BLADES.
4. IF CONDITIONS ARE MUDDY, WHEELED EQUIPMENT WILL ALSO BE CLEANED USING HAND TOOLS TO REMOVE EXCESS SOIL FROM TIRES AND WHEEL WELLS.
5. CLEANING WILL BE CONDUCTED ON CONSTRUCTION MATS OR OTHER RAISED SURFACE TO MINIMIZE REATTACHMENT OF SOIL THAT HAS BEEN PREVIOUSLY REMOVED.
6. MATS WILL BE CLEANED BETWEEN EACH PIECE OF EQUIPMENT.
7. SOIL COLLECTED DURING THE CLEANING PROCESS WILL BE STOCKPILED AT A CONVENIENT LOCATION NEAR THE CLEANING STATION AND DISPOSED OF IN AN ACCEPTABLE LAND FILL.
8. IF THE SOIL HAS A SIGNIFICANT COMPONENT OF SUBSOIL, IT WILL BE PLACED OVER THE BACKFILLED TRENCH OR IN THE ADJACENT SPOIL STORAGE AREA, AND SUBSEQUENTLY COVERED WITH TOPSOIL. IF THE LAND OWNER DIES NOT APPROVE OF ON–SITE DISPOSAL, THE SOIL WILL BE TAKEN TO AN APPROVED DISPOSAL SITE.
9. SOILS CONTAMINATED WITH OIL OR GREASE WILL BE REMOVED AND DISPOSED OF IN ACCORDANCE PROJECT SPCCC PLAN.

REVISIONS
01 REVISED LABELS
02 2010–10–11 REVISED TITLE BLOCK

2010–10–15 10:50am G:\2000DraftingandGIS\CADFiles\Drawings\PhaseIV_IFB\Crossing_Details_20081104.dwg Dan Tran

TransCanada
In business to deliver

PREPARED BY:
TROW ENGINEERING CONSULTANTS, INC.
2700 S. Post Oak Blvd., Suite 400
Houston, TX 77056
Phone: 1–713–693–6400
Fax: 1–713–693–6491
Trow

DESIGNER:		KEYSTONE STEELE CITY (NPS 36 2011) PHILLIPS SECTION		
JMP (NAME)	2008–09–08 (DATE)	FIA # 4359	CHAINAGE:	DISCIPLINE # 03
		TITLE: DETAIL 30 EQUIPMENT CLEANING STATION DETAIL		
CHECKED BY: WSF	DESIGN CHECKER: RW P7100	SCALE N.T.S.	DWG No 4359–03–ML–05–713	REV 02

TC_A4_BR.DWG 8.5X11

CADD DRAWING: DO NOT MAKE MANUAL REVISIONS

THESE ARE TYPICAL DRAWINGS; ACTUAL SITE CONDITIONS MAY VARY FROM THE SITE GRAPHICALLY REPRESENTED.

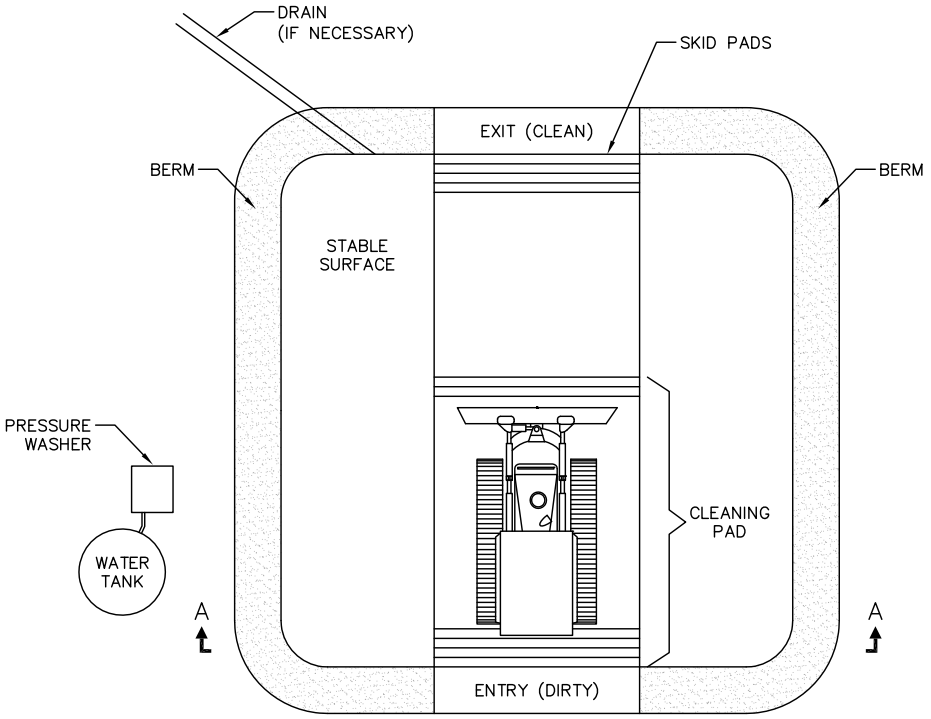

PLAN

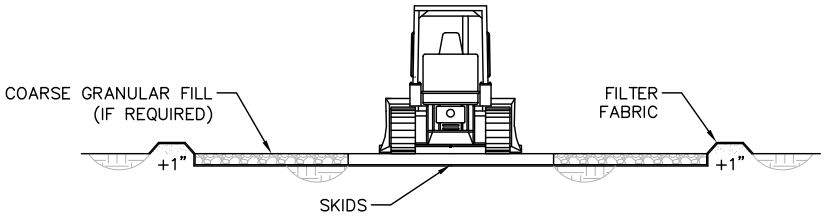

SECTION A–A

WASH STATION NOTES:

1. ALL EQUIPMENT AND VEHICLES ARE REQUIRED TO BE CLEANED AT WASH STATION LOCATIONS SHOWN ON THE CONSTRUCTION DRAWINGS OR AS DIRECTED BY THE ENVIRONMENTAL INSPECTOR. WASH STATIONS WILL BE CONSTRUCTED BY THE CONTRACTOR. WASHINGS WILL BE CARRIED OUT UNDER THE SUPERVISION AND TO SATISFACTION OF THE ENVIRONMENTAL INSPECTOR.
2. WASH WATER USED FOR CLEANING WILL NOT BE ALLOWED TO ENTER ANY WATERBODY, WETLAND, OR IRRIGATION CANAL/DITCH. ANY SOILS CONTAMINATED BY PETROLEUM–BASED, OR OTHER UNDESIRABLE MATERIALS FROM WASH STATIONS WILL BE REMOVED.
3. THE SIZE OF STATION WILL BE ADEQUATE TO ACCOMMODATE THE MAXIMUM SIZE OF EQUIPMENT EXPECTED.
4. EQUIPMENT WILL CONSISTENTLY ENTER THE "DIRTY END" AND EXIT THE "CLEAN END."
5. STABLE DRAINAGE FROM THE SITE WILL BE PROVIDED (IF NECESSARY). NO DISCHARGE TO STREAMS OR WETLANDS WILL BE ALLOWED.
6. WASH STATIONS WILL BE EQUIPPED WITH SKID PADS OR WASH RACKS TO PREVENT SOIL FROM BEING CARRIED ON TRACKS OR TIRES AS EQUIPMENT AND VEHICLES EXIT THE WASH STATION. SKIDS ARE TO BE CLEANED EACH TIME A PIECE OF EQUIPMENT IS CLEANED.
7. GRAVEL FILL (IF REQUIRED) AND FILTER FABRIC WILL BE REMOVED AND DISPOSED OF IN AN ACCEPTABLE LAND FILL.
8. THE DEPRESSION WILL BE BACKFILLED WITH BERMED MATERIAL.
9. CLEANING SITES WILL BE MONITORED DURING THE POST CONSTRUCTION MONITORING PROGRAM AND WEEDS WILL BE CONTROLLED PER THE NOXIOUS WEED MANAGEMENT PLAN.

REVISIONS
01 REVISED LABELS
02 2010–10–11 REVISED TITLE BLOCK

2010–10–15 10:51am G:\2000DraftingandGIS\CADFiles\Drawings\PhaseIV_IFB\Crossing_Details_20081104.dwg Dan Tran

TransCanada
In business to deliver

PREPARED BY:
TROW ENGINEERING CONSULTANTS, INC.
2700 S. Post Oak Blvd., Suite 400
Houston, TX 77056
Phone: 1–713–693–6400
Fax: 1–713–693–6491
Trow

DESIGNER: JMP (NAME) 2008–09–08 (DATE)

CHECKED BY: WSF

DESIGN CHECKER: RW

P7100

KEYSTONE STEELE CITY (NPS 36 2011) PHILLIPS SECTION

FIA # 4359 | CHAINAGE: | DISCIPLINE # 03

TITLE
DETAIL 31
EQUIPMENT WASH STATION DETAIL

SCALE N.T.S. | DWG No 4359–03–ML–05–714 | REV 02

TC_A4_BR.DWG 8.5X11

CADD DRAWING: DO NOT MAKE MANUAL REVISIONS

THESE ARE TYPICAL DRAWINGS; ACTUAL SITE CONDITIONS MAY VARY FROM THE SITE GRAPHICALLY REPRESENTED.

1. POTENTIAL LOCATIONS WHERE TRIPLE DITCH TOPSOIL CONSERVATION MAY BE COMPLETED ARE SHOWN ON THE ALIGNMENT SHEETS. KEYSTONE WILL DIRECT THE ACTUAL LOCATIONS WHERE TRIPLE DITCH WILL BE COMPLETED DURING, OR IMMEDIATELY PRIOR TO, TOPSOILING THE ROW. KEYSTONE MAY MODIFY TRIPLE DITCH PROCEDURES FROM THOSE DESCRIBED HERE TO ADDRESS SITE-SPECIFIC, OR SOIL-SPECIFIC, CONDITIONS.

2. STRIP TOPSOIL ("A" HORIZON) ACCORDING TO THE "A" HORIZON DEPTHS AND CONSTRUCTION DETAILS SHOWN ON CONSTRUCTION ALIGNMENT SHEETS. PLACE "A" HORIZON IN THE ADDITIONAL TEMPORARY WORKSPACE OR THE WINDROW WITHIN THE WORKING SIDE OF THE CONSTRUCTION RIGHT-OF-WAY. IN AREAS OF THICKER "A" HORIZON'S, "A" HORIZON MAY BE SPLIT TO BOTH SIDES OF THE RIGHT-OF-WAY.
REMOVE "B" HORIZON (2ND DITCH) TO DEPTHS SPECIFIED BY KEYSTONE AND STOCKPILE ON SPOIL SIDE. THE "B" HORIZON SHOULD BE REMOVED IN A STRIP AT LEAST 20 FEET WIDE OVER THE TRENCH TO ALLOW FOR STORAGE OF THE TRENCH SPOIL MATERIALS. MAINTAIN A MINIMUM OF 2 FEET BETWEEN "A" HORIZON AND "B" HORIZON STOCKPILES.

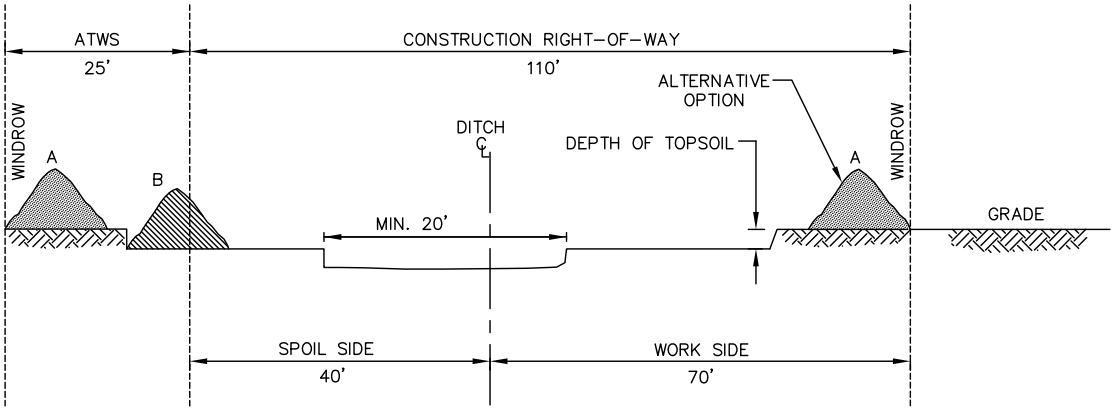

3. EXCAVATE TRENCH. ENSURE THE DIFFERENT SOIL HORIZONS ("B" HORIZON AND "C" HORIZON) ARE IN SEPARATE STOCKPILES. THE VISUAL DISTINCTION OF EACH PILE MUST BE POSSIBLE AT ALL TIMES. THE STOCKPILING SHALL ALLOW FOR RE-PLACEMENT OF THE SOIL HORIZONS BACK TO THEIR ORIGINAL SEQUENCE WITHOUT LOSS OF SOIL. MAINTAIN A MINIMUM OF 2 FEET BETWEEN "B" HORIZON AND "C" HORIZON STOCKPILES.

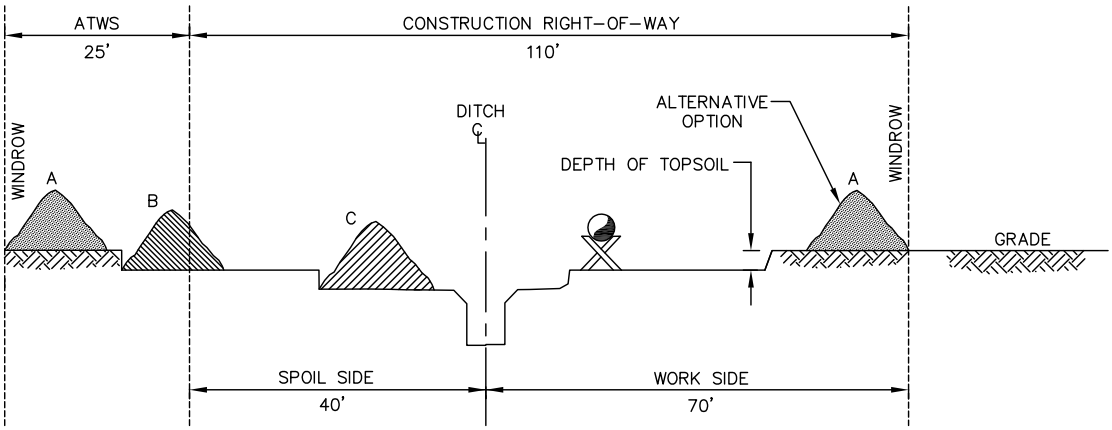

REVISIONS		
01	REVISED LABELS	2010-10-15 10:52am G:\2000DraftingandGIS\CADFiles\Drawings\PhaseIV_IFB\Crossing_Details_20081104.dwg Dan Tran
02	2010-10-08 REVISED DETAIL	
03	2010-10-11 REVISED TITLE BLOCK	

TransCanada
In business to deliver

PREPARED BY:
TROW ENGINEERING CONSULTANTS, INC.
2700 S. Post Oak Blvd., Suite 400
Houston, TX 77056
Phone: 1-713-693-6400
Fax: 1-713-693-6491
Trow

DESIGNER: JMP (NAME) 2008-09-08 (DATE)

CHECKED BY: WSF

DESIGN CHECKER: RW P7100

KEYSTONE STEELE CITY (NPS 36 2011) PHILLIPS SECTION

FIA # 4359 | CHAINAGE: | DISCIPLINE # 03

TITLE
DETAIL 67
TOPSOIL CONSERVATION DITCH & SPOIL STRIPPING TRIPLE DITCH

SCALE N.T.S. | DWG No 4359-03-ML-05-724 | REV 03

TC_A4_BR.DWG 8.5X11

CADD DRAWING: DO NOT MAKE MANUAL REVISIONS

THESE ARE TYPICAL DRAWINGS; ACTUAL SITE CONDITIONS MAY VARY FROM THE SITE GRAPHICALLY REPRESENTED.

4. BACKFILL TRENCH AND COMPACT AS PER APPROVED PROCEDURE.. PLACE THE SOIL HORIZONS BACK IN THEIR ORIGINAL SEQUENCE IN THE TRENCH.

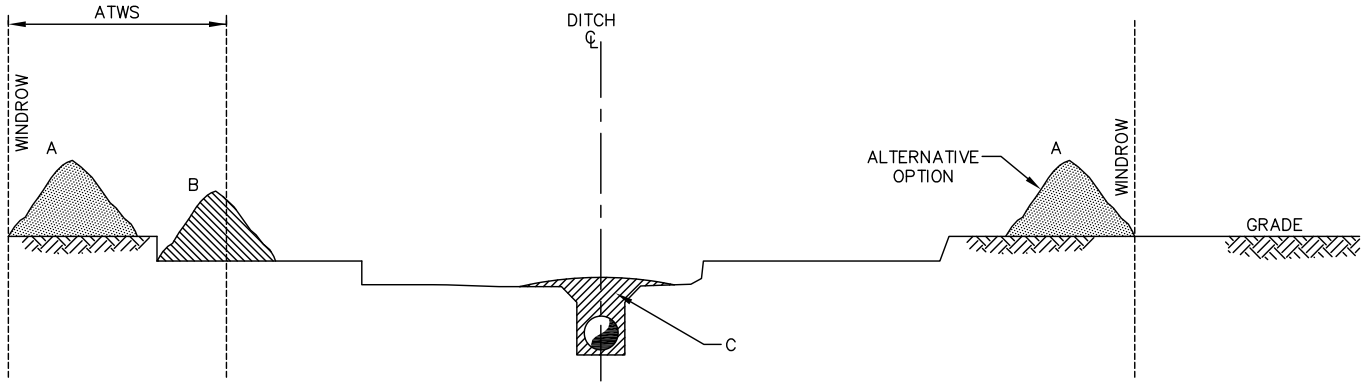

5. RELIEVE AREAS OF COMPACTION AND FEATHER (B) MATERIAL EVENLY OVER STRIPPED AREA.

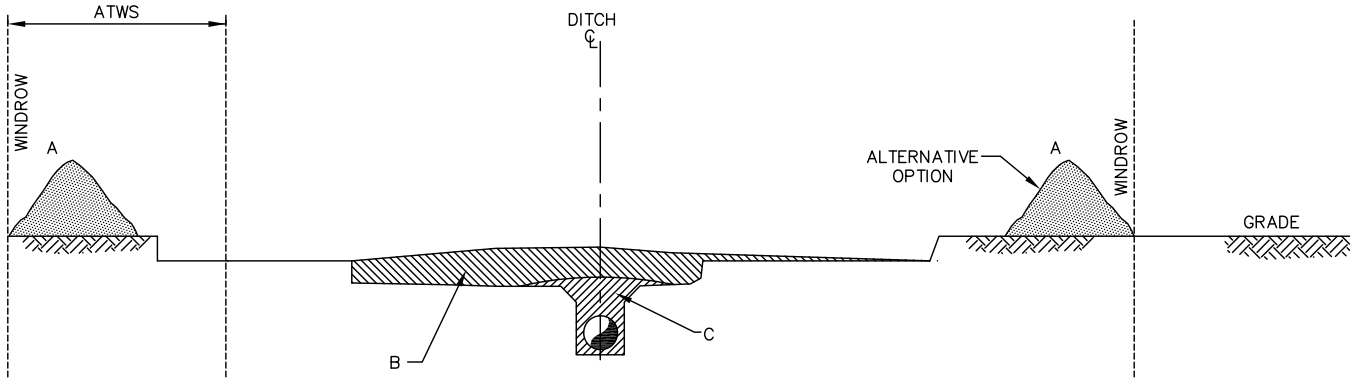

6. REPLACE "A" HORIZON PILE EVENLY OVER STRIPPED AREA.

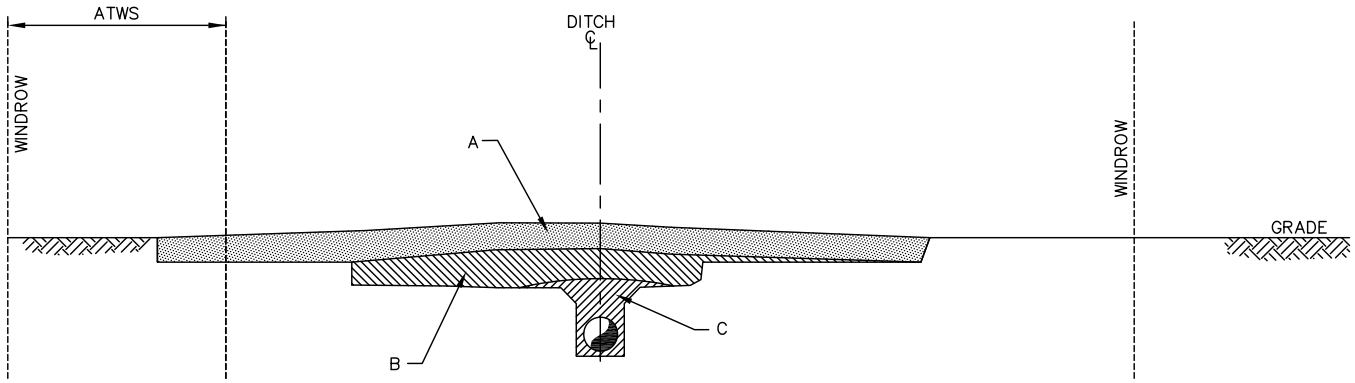

REVISIONS		
03	2010-10-11	REVISED TITLE BLOCK
02	2010-10-08	REVISED DETAIL
01		REVISED LABELS

2010-10-15 10:53am G:\2000DraftingandGIS\CADFiles\Drawings\PhaseIV_IFB\Crossing_Details_20081104.dwg Dan Tran

TransCanada
In business to deliver

PREPARED BY:
TROW ENGINEERING CONSULTANTS, INC.
2700 S. Post Oak Blvd., Suite 400
Houston, TX 77056
Phone: 1-713-693-6400
Fax: 1-713-693-6491
Trow

DESIGNER: JMP (NAME) 2008-09-08 (DATE)

CHECKED BY: WSF

DESIGN CHECKER: RW P7100

KEYSTONE STEELE CITY (NPS 36 2011) PHILLIPS SECTION

FIA # 4359 | CHAINAGE: | DISCIPLINE # 03

TITLE
DETAIL 67A
TOPSOIL CONSERVATION DITCH & SPOIL STRIPPING TRIPLE DITCH

SCALE N.T.S. | DWG No 4359-03-ML-05-725 | REV 03

TC_A4_BR.DWG 8.5X11

CADD DRAWING: DO NOT MAKE MANUAL REVISIONS